2013

Alternatori e motori di avviamento,
Alternators and starter motors,
Lichtmaschinen und Anlasser,
Alternateurs et démarreurs,
Alternadores y motores de arranque,
Alternadores e motores de arranque,
Μίζες και δυναμό,
Alternatory i rozruszniki,
Генераторы и стартеры,
Alternatörler ve marş motorları



MAGNETI MARELLI

checkstar SERVICE NETWORK

Indice
Contents
Inhaltsverzeichnis
Sommaire
Índice

Índice
Περιεχόμενα
Spis treści
Содержание
İndeks

Legenda
Legend
Legende
Légende
Leyenda
Legenda
Υπόμνημα
Legenda
Легенда
Semboller

4

Alternatori – Alternators – Lichtmaschinen – Alternateurs – Alternadores – Alternadores – Δυναμό – Alternatory – Генераторы – Alternatörler

Codici ad esaurimento
Part numbers until stocks last
Solange vorrat reicht
Références à épuisement
Códigos hasta finalizar stock
Códigos em fim de estoque
Κωδικοί προς εξάντληση
Kody na wyczerpaniu
До исчерпания складского запаса
Stok tükenene kadar aktif olan parça numaraları

9

Codici sostituiti
Replaced references
Ersetzte Artikel-Nr.
Références remplacées
Referencias sustituidas
Referências substituídas
Κωδικοί αντικατάστασης
Kody zamienione
Замененные позиции
Değiştirilen referanslar

13

Applicazione per marca e veicolo
Vehicle application guide
Zuordnung nach Marke und Fahrzeugtyp
Affectations par marques et véhicules
Aplicación por marca y vehículo
Aplicação por marca e veículo
Εφαρμογή ανά μοντέλο
Zastosowanie dla marki i pojazdu
Применение по марке и модели
Marka ve araca göre uygulama

17
171
311

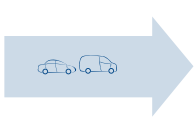











Applicazione per marca e veicolo
Vehicle application guide
Zuordnung nach Marke und Fahrzeugtyp
Affectations par marques et véhicules
Aplicación por marca y vehículo
Aplicação por marca e veículo
Εφαρμογή ανά μοντέλο
Zastosowanie dla marki i pojazdu
Применение по марке и модели
Marka ve araca göre uygulama

511

693

811

Applicazione per codice
Buyers guide
Zuordnung nach Bestellnummer
Affectations par références
Aplicación por referencia
Aplicação por código
Εφαρμογές ανά κωδικό
Zastosowanie dla kodu
Применение по коду
Koda göre uygulama

865

Disegni
Drawings
Zeichnungen
Schémas
Diseños
Desenhos
Σχεδιαγράμματα
Rysunki techniczne
Рисунки
Resimler

985

Tavole di comparazione
cross reference guide
Gegenüberstellung Cross-Referenzen
Table de correspondance
Tabla de equivalencias
Tabelas de equivalências
Πίνακας αντιστοιχιών
Tabela porównawcza
Кросс-таблица
çapraz referans tablosu

1011





Legenda
Legend
Legende
Légende
Leyenda
Legenda
Υπόμνημα
Legenda
Легенда
Semboller



Costruttore e modello
Make and model
Hersteller und Modell
Marque et modèle
Constructor y modelo
Montadora e modelo
Μάρκα και μοντέλο
Marka i model
Марка и модель
Üretici ve model

autovetture e veicoli commerciali
car and light commercial vehicles
PKW und leichte Transporter
Véhicules légers et utilitaires
Turismos y vehículos comerciales ligeros
Carros e veículos comerciais leves
αυτοκίνητα και ελαφριά φορτηγά
Samochody osobowe i dostawcze
Легковые автомобили и коммерческий транспорт
Binek ve hafif ticari araçlar



Costruttore e modello
Make and model
Hersteller und Modell
Marque et modèle
Constructor y modelo
Montadora e modelo
Μάρκα και μοντέλο
Marka i model
Производитель и модель
Üretici ve model

Autocarri
truck
Lastkraftwagen
Camion
Camión
Caminhões
φορτηγό
ciężarówka
Грузовик
Kamyon



Costruttore e modello
Make and model
Hersteller und Modell
Marque et modèle
Constructor y modelo
Montadora e modelo
Μάρκα και μοντέλο
Marka i model
Производитель и модель
Üretici ve model

Applicazioni speciali
special application
Spezielle Anwendungen
Applications particulières
Aplicaciones especiales
Aplicações especiais
ειδική εφαρμογή
Zastosowania specjalne
Специальное применение
Özel uygulama



Motore
Motor
Motor
Moteur
Motor
Motor
Κινητήρας
Silnik
Двигатель
Motor



Anno di produzione
Manufacturing year
Baujahr
Année de production
Año de fabricación
Ano de fabricação
Ετος παραγωγς
Rok produkcji
Год производства
Üretim yılı

kW

Potenza motore
Engine power
Motorleistung
Puissance moteur
Potencia motor
Potência do motor
Ισχύς κινητήρα
Moc silnika
Мощность двигателя
Motor gücü



Note
Notes
Anmerkungen
Notes
Notas
Notas
Σημείωση
Uwagi
Примечание
Not



Dati alternatore
Alternator data
Generatordaten
Données de l'alternateur
Datos del alternador
Dados do alternador
Στοιχεία δυναμό
Alternator data
Техническое описание-генератор
Alternatör bilgisi

North Europe Market

Mercato Nord Europa
North Europe Market
Markt Nord-Europa
Marché Nord Europe
Mercado del Norte de Europa
Mercado Norte da Europa
Αγορά Βόρειας Ευρώπης
Rynek Europa Północna
Рынок Северной Америки
Kuzey Avrupa Pazarı

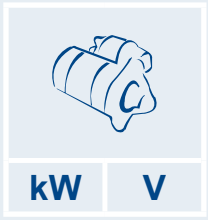

Dati motore avviamento
Starter motor data
Anlasserdaten
Données du démarreur
Datos del motor de arranque
Dados do motor de arranque
Στοιχεία μίζας
Rozrusznik data
Техническое описание - стартер
Marş motoru bilgisi

Turkey Market

Mercato Turchia
Turkey Market
Markt Türkei
Marché Turquie
Mercado de Turquía
Mercado Turquia
Τούρκικη αγορά
Rynek Turcja
Рынок Турции
Türkiye Pazarı



Codici Magneti Marelli
Magneti Marelli references
Magneti Marelli Nr.
Références Magneti Marelli
Códigos Magneti Marelli
Códigos Magneti Marelli
Κωδικοί Magneti Marelli
Kody Magneti Marelli
Коды Магнети Марелли
Magneti Marelli kodları

Chinese Market

Mercato cinese
Chinese Market
Markt China
Marché Chine
Mercado de China
Mercado chinês
Κινέζικη αγορά
Rynek Chiny
Китайский рынок
Çin Pazarı



vedere cross - disegno
see cross reference guide - drawing
Siehe Gegenüberstellung Cross-Referenzen Zeichnungen
Voir cross - schémas
Ver cruce de referencias - diseño
Veja tabela de equivalências - desenho
βλ. πίνακες αντιστοιχιών - σχεδιαγράμματα
Zobacz tabelę porównawczą - rysunek techniczny
Смотреть таблицу с кроссами-рисунки
çapraz referans - çizime bakınız



cambio automatico
automatic transmission
Automatik-Getriebe
boîte automatique
Cambio automático
Transmissão automática
αυτόματο κιβώτιο
Automatyczna skrzynia biegów
Автоматическая Коробка Передач
Otomatik Vites



Con Aria Condizionata
Air Conditioning Unit
Klimaanlage
Avec air conditionné
Aire Acondicionado
Ar condicionado
Μονάδα Κλιματισμού
Z klimatyzacją
Кондиционер
Klimalı



cambio manuale
manual transmission
Schaltgetriebe
boîte manuelle
cambio manual
Transmissão manual
χειροκίνητο κιβώτιο
Manualna skrzynia biegów
Механическая коробка передач
manuel vites



Senza Aria Condizionata
W/O Air Conditioning Unit
Ohne Klimaanlage
Sans air conditionné
Sin Aire Acondicionado
Sem ar condicionado
χωρίς Μονάδα Κλιματισμού
Bez Klimatyzacja
Без Кондиционера
Y/ Klimalı



cambio manuale 4 5 6 marce
manual transmission with 4 5 6 gears
Schaltgetriebe 4 5 6 Gänge
boîte manuelle à 4, 5, 6 rapports
cambio manual 4 5 6 marchas
transmissão manual de 4, 5 ou 6 velocidades
χειροκίνητο κιβώτιο 4,5,6 ταχυτήτων
Manualna skrzynia biegów 4, 5, 6 biegów
Механическая коробка передач на 4-5-6 скоростей
4 5 6 marşlı manuel vites



Con servosterzo
Power steering
Servolenkung
Direction assistée
Dirección asistida
Direção hidráulica
Ηλεκτρική υποβοήθηση
Ze wspomaganiem kierownicy
С гидроусилителем
Servo direksiyonlu



Senza servosterzo
W/O Power steering
Ohne Servolenkung
Sans Direction assistée
Sin Dirección asistida
Sem direção hidráulica
χωρίς Ηλεκτρική υποβοήθηση
Bez wspomagania kierownicy
Без гидроусилителя
Servo direksiyonsuz



Zone climatiche fredde
Cold climatic areas
kalte Klimazonen
Zones climatiques froides
Zonas climáticas frías
Regiões climáticas frias
Ψυχρές κλιματικές ζώνες
Zimne strefy klimatyczne
Страны с холодным климатом
Soğuk iklim bölgeleri

I

Magneti Marelli After Market Parts and Services S.p.A. ha curato con particolare attenzione la stesura del presente catalogo; declina comunque ogni responsabilità per eventuali errori od omissioni relativi a schemi, disegni, immagini, corrispondenze con i codici O.E. ecc. e si riserva il diritto di apportare modifiche al contenuto senza l'obbligo di darne preventiva comunicazione. Sono particolarmente graditi, da parte degli utenti, commenti, segnalazioni di inesattezze e qualsiasi altro suggerimento atto a rendere più efficace la prossima edizione del catalogo.

GB

Magneti Marelli After Market Parts and Services S.p.A. has devoted its best attention to the editing of this catalogue; it nevertheless declines any responsibility for possible mistakes or omissions regarding figures, drawings, pictures, correspondence with O.E. codes etc. and it reserves the right to modify the contents without prior notice. Users' comments, reports of inaccuracies or any other suggestions which may in any way improve the next edition of this catalogue are warmly welcomed.

D

Magneti Marelli After Market Parts and Services S.p.A. hat diesen Katalog sorgfältig verfasst. Die Firma enthebt sich jeglicher Verantwortung für eventuelle Fehler oder Auslassungen hinsichtlich Schemen, Darstellungen,Bilder, Zeichnungen, Übereinstimmungen, mit O.E. Codes usw. und behält sich das Recht vor, ohne Ankündigung am Inhalt Veränderungen vorzunehmen. Anmerkungen, Fehlerhinweise und weitere Anregungen seitens der Kunden werden gerne entgegengenommen, um die nächste Ausgabe des Katalogs effizienter zu gestalten.

F

Magneti Marelli After Market Parts and Services S.p.A. a soigné avec une attention particulière la rédaction de ce catalogue; elle décline cependant toute responsabilité pour toute erreur ou omission éventuelle dans les schémas, les dessins, les images, les correspondances avec les codes O.E., etc. et se réserve le droit d'en modifier le contenu sans obligation de communication préalable. Les commentaires, les signalisations d'inexactitudes et toute autre suggestion des utilisateurs susceptibles de rendre la prochaine rédaction du catalogue plus efficace seront particulièrement appréciés.

E

Magneti Marelli After Market Parts and Services S.p.A. ha cuidado con especial atención la redacción del presente catálogo; de todas maneras declina toda responsabilidad por eventuales errores u omisiones relativos a esquemas, diseños, fotos, correspondencia con los códigos O.E., etc., y se reserva el derecho de aportar modificaciones al contenido sin la obligación de previo aviso. Se agradecen especialmente los comentarios, las indicaciones de inexactitudes y cualquier otra sugerencia por parte de los usuarios que sean útiles para hacer más eficaz la próxima edición del catálogo.

P

A Magneti Marelli After Market Parts and Services S.p.A. cuidou com particular atenção a redação do presente catálogo; como quer que seja, rejeita qualquer responsabilidade face a eventuais erros o omissões relacionados aos esquemas, desenhos, imagens, correspondências aos códigos O.E. etc. e reserva-se o direito de introduzir alterações ao seu conteúdo sem a obrigação de comunicação prévia das mesmas. São particularmente bem aceitos, comentários, sinalizações de inexatidões e qualquer outra sugestão idônea a tornar mais eficaz a próxima edição do catálogo.

GR

Η Magneti Marelli φροντισε με καθε λεπτομερεια την ορθοτητα των στοιχειων αυτου του καταλογου, δεν φερει ομως καμια ευθυνη για τυχον λαθη ή παραληψεις που σχετιζονται με σχηματα, σχεδια, εικόνες, αντιστοιχιες με γνησια νουμερα κτλ. και επιφυλασσεται του δικαιωματος να αλλαξει το περιεχομενο του καταλογου οποιαδηποτε στιγμη χωρις προτερη ενημερωση. Οποιαδηποτε σχολια η παρατηρησεις, με στοχο την βελτιωση του καταλογου, ειναι ευπροσδεκτα.

PL

Firma Magneti Marelli After Market Parts and Services S.p.A dołożyła szczególnych starań przy opracowywaniu niniejszego katalogu. Nie ponosi ona jednak żadnej odpowiedzialności za ewentualne błędy lub braki dotyczące schematów, rysunków, rysunki, zgodności z kodami O.E. Firma Magneti Marelli After Market Parts and Services S.p.A zastrzega sobie prawo do wprowadzania zmian bez obowiązku uprzedniego powiadamiania o tym. Szczególnie mile widziane są komentarze i sygnały dotyczące nieprawidłowości oraz jakiekolwiek inne sugestie zgłaszane przez klientów, mające na celu udoskonalenie następnych edycji katalogu.

RUS

Magneti Marelli After Market Parts and Services S.p.A. уделила особое внимание созданию этого каталога. Но, несмотря на это, мы не несем ответственности за возможные ошибки или неточности в цифрах, изображениях или кросс-номерах. Также мы оставляем за собой право вносить любые изменения без предварительного уведомления. Мы будем благодарны Вам за замечания и комментарии, которые учтем при подготовки следующего издания каталога.

TR

Magneti Marelli After Market S.p.A. Parts and Services, mevcut katalogdaki yazıyı çok özenli bir şekilde hazırlamıştır; O.E. vs. şifrelerine karşılık gelen her türlü model ve tasarım ile ilgili olası eksiklikler ve hatalar ile ilgili sorumluluğunun altını çizer ve öncesinde haber verme zorunluluğu olmaksızın değişiklik yapma hakkını saklı tutar. Kullanıcı tarafından yorumların, eksikliklerin ve her türlü önerilerin belirtilmesi, bir sonraki katalog baskısını daha etkili hale getirecektir.

I È vietata la riproduzione, anche parziale, del contenuto del presente catalogo senza preventiva autorizzazione scritta della Magneti Marelli After Market Parts and Services S.p.A, che tutelerà i propri diritti a termine di legge.

GB It is forbidden to reproduce, even partially, the contents of this catalogue without prior written consent from Magneti Marelli After Market Parts and Services S.p.A., who will protect its rights in accordance with the law.

D Die Vervielfältigung, auch teilweise, des urheberrechtlich geschützten Inhalts des vorliegenden Katalogs ist ohne schriftliche Genehmigung durch Magneti Marelli After Market Parts and Services S.p.A. untersagt.

F Il est interdit de reproduire même partiellement le contenu de ce catalogue sans autorisation écrite préalable de Magneti Marelli After Market Parts and Services S.p.A., qui protégera ses droits selon les termes de la loi.

E Está prohibida la reproducción, total o parcial, del contenido del presente catálogo sin previa autorización escrita de Magneti Marelli After Market Parts and Services S.p.A, que protegerá sus propios derechos con arreglo a la ley.

P É proibida a reprodução, mesmo que parcial, do conteúdo do presente catálogo sem a prévia autorização escrita de Magneti Marelli After Market Parts and Services S.p.A, que defenderá os próprios direitos, nos termos de lei.

GR Απαγορευται η αναπαραγωγη, ολικη η μερικη,του περιεχομενου του παροντος καταλογου χωρις την γραπτη εξουσιοδοτηση της Magneti Marelli After Market Parts and Services S.p.A

PL Zabroniona jest nawet częściowa reprodukcja zawartości katalogu bez uprzedniej pisemnej autoryzacji ze strony firmy Magneti Marelli After Market Parts and Services S.p.A., która chroni swą własność zgodnie z przepisami prawa.

RUS Запрещяется воспроизводить, даже частично, содержание этого каталога без предварительного письменного согласия от Magneti Marelli After Market Parts and Services S.p.A, которая будет защищать свои права в соответствии с законом.

TR Tüm yasal hakların sahibi olan Magneti Marelli After Market Parts and Services S.p.A. 'in yazılı izni olmaksızın mevcut kataloğun kısmen de olsa çoğaltılması yasaktır.

La corrispondenza dovrà essere inviata a:
Correspondence should be sent to:
Der Briefverkehr ist zu senden an:
Envoyer la correspondance à:
La correspondencia debe ser enviada a:
La correspondência deverá ser enviada a:
Η αλληλογραφια θα πρεπει να αποστελεται:
Korespondencję należy kierować na adres:
Соответствующую корреспонденцию просим присылать по адресу:
Ticari yazışmalar şu adrese gönderilmelidir:

Codici ad esaurimento
Part numbers until stocks last
Solange vorrat reicht
Références à épuisement
Códigos hasta finalizar stock
Códigos em fim de estoque
Κωδικοί προς εξάντληση
Kod na wyczerpaniu
До исчерпания складского запаса
Stok tükenene kadar aktif olan parça numaraları

LONG	SHORT				kW			A	V
063324161010	**MAN104**	ROVER	200	216	61	3/1985	→ 1/1995	65	14
063324231010	**MAN124**	FORD	TRANSIT	2.0	57	1/1986	→ 12/1991	70	14
063324233010	**MAN125**	LAND ROVER	DISCOVERY I	3.5	113	9/1989	→ 6/1994	72	14
063324322010	**MAN162**	ROVER	800	825 D/SD	87	8/1991	→ 2/1999	72	14
054022606010	**MAN169**	LAND ROVER	RANGE ROVER I	3.5 Vogue	120	10/1985	→ 12/1989	85	14
054022197010	**MAN182**	LAND ROVER	RANGE ROVER I	2.4 Diesel	78	4/1986	→ 12/1990	65	14
063341333010	**MAN672**	ROVER	800	820	74	1/1991	→ 10/1991	100	14
063341352010	**MAN673**	LAND ROVER	DISCOVERY I	2.0 16 V	99	9/1993	→ 6/1994	100	14
054022602010	**MAN687**	FORD	ESCORT V - VII	1.8 D - 1.8 TD	44 → 66	1/1991	→ 7/2000	70	14
054022626010	**MAN701**	LAND ROVER	RANGE ROVER I	3.5	63 → 120	1/1985	→ 1/1995	55	14
054022646010	**MAN706**	ROVER	100 - 200 - 400	114 - 214 - 414	55 → 76	1/1990	→ 12/1998	65	14
063377422010	**MAN7422**	FORD	FOCUS II	1.8 TDCi	85	11/2004	→	105	14
054022642010	**MAN761**	ROVER	MONTEGO	2.0	75 → 86	10/1988	→ 10/1994	65	14
054022654010	**MAN765**	NISSAN	PRIMERA	1.6	66 → 75	6/1990	→ 1/1996	67	14
063321096010	**MAN773**	FGA	145 - 146 - 155 CROMA DELTA II DEDRA TIPO	1.6 i.e. - 1.8 i.e 1.9 D - 1.9 TD 2.0 - 2.0 i.e 2.0 i.e. Turbo	66 → 142	3/1987	→ 8/1999	65	14
063341240010	**MAN822**	LAND ROVER	RANGE ROVER I RANGE ROVER II	3.9 / Cat / Vogue	127 → 140	11/1988	→ 3/2002	120	14
063341353010	**MAN829**	LAND ROVER	RANGE ROVER I	3.9 Cat.	127	11/1988	→ 7/1994	100	14
063321426010	**MAN866**	FGA	BRAVO I COUPE LYBRA MAREA	2.0 20V Turbo / HGT	108 → 162	10/1995	→ 1/2001	100	14

Codici sostituiti
Replaced references
Ersetzte Artikel-Nr.
Références remplacées
Referencias sustituidas
Referências substituídas
Κωδικοί αντικατάστασης
Kody zamienione
Замененные позиции
Değiştirilen referanslar

OLD		NEW	
LONG	SHORT	LONG	SHORT
054022183010	MAN861	054022598010	MAN666
054022582010	MAN188	063324264010	MAN139
054022595010	MAN669	054022581010	MAN649
063320021010	MAN260	063321042010	MAN283
063320023010	MAN770	063321041010	MAN284
063321001010	MAN343	063341454010	MAN1014
063321003010	MAN1086	063321154010	MAN344
063321047010	MAN289	063320025010	MAN261
063321103010	MAN376	063321409010	MAN909
063321150010	MAN1087	063321156010	MAN323
063321167010	MAN327/EX	063321152010	MAN327
063321171010	MAN329	063321165010	MAN382
063321172010	MAN330/EX	063321191010	MAN330
063321204010	MAN641	063321615010	MAN807
063321231010	MAN782/EX	063321395010	MAN782
063321253010	MAN1090	063321340010	MAN646
063321270010	MAN640/EX	063321600010	MAN640
063321276010	MAN1091	063321617010	MAN809
063321280010	MAN1092	063321747010	MAN1041
063321281010	MAN644/EX	063321604010	MAN798
063321283010	MAN645/EX	063321625010	MAN645
063321310010	MAN792/EX	063321858010	MAN1116
063321349010	MAN788	063321800010	MAN1104
063321355010	MAN793/EX	063321803010	MAN1100
063321398010	MAN790	063321426010	MAN866 (until stocks last)
063321405010	MAN789/EX	063321391010	MAN789
063321423010	MAN794	063321802010	MAN1102
063321497010	MAN1030	063321859010	MAN1117
063321506010	MAN1046	063321806010	MAN1109
063321612010	MAN805	063321810010	MAN1147
063321613010	MAN806	063321729010	MAN1107
063321629010	MAN940	063321715010	MAN1039
063321713010	MAN1055	063321605010	MAN939
063321718010	MAN1106	063377002010	MAN7002
063321765010	MAN1157	063377007010	MAN7007
063321776010	MAN1158	063377009010	MAN7009
063321790010	MAN1115	063321863010	MAN1156
063321809010	MAN1141	063321839010	MAN1119
063321848010	MAN1118	063377001010	MAN7001
063341244010	MAN824	063341730010	MAN938
063341666010	MAN833/EX	063341695010	MAN833
063341741010	MAN1167	063341740010	MAN1163
063377401010	MAN7401	063377409010	MAN7409
063377402010	MAN7402	063377410010	MAN7410

OLD		NEW	
LONG	SHORT	LONG	SHORT
063377403010	**MAN7403**	063377411010	**MAN7411**
063377405010	**MAN7405**	063377413010	**MAN7413**
063377422010	**MAN7422**	063377443010	**MAN7443**

Applicazione per marca e veicolo
Vehicle application guide
Zuordnung nach Marke und Fahrzeugtyp
Affectations par marques et véhicules
Aplicación por marca y vehículo
Aplicação por marca e veículo
Εφαρμογή ανά μοντέλο
Zastosowanie dla marki i pojazdu
Применение по марке и модели
Marka ve araca göre uygulama

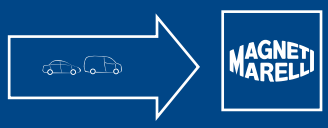

		kW		i	A	V	LONG	SHORT
ALFA ROMEO								
145 (930)								
1.4 i.e. 16V T.S.	AR 33503, AR 38501	76	12/1996 → 01/2001		90	12	063321729010	**MAN1107**
1.4 i.e. 16V T.S.	AR 33503, AR 38501	76	12/1996 → 01/2001	→ 496654 ;	85	12	063321802010	**MAN1102**
1.4 i.e. 16V T.S.	AR 33503, AR 38501	76	12/1996 → 01/2001		100	12	063321803010	**MAN1100**
1.4 i.e. 16V T.S.	AR 33503, AR 38501	76	12/1996 → 01/2001	496655 →;	85	12	063321810010	**MAN1147**
1.4 i.e. 16V T.S.	AR 33503, AR 38501	76	12/1996 → 01/2001		75	12	063321813010	**MAN1151**
1.4 i.e. 16V T.S.	AR 33503, AR 38501	76	12/1996 → 01/2001		120	12	063321858010	**MAN1116**
1.6 i.e. 16V T.S.	AR 38201, AR 67601	88	12/1996 → 01/2001		90	12	063321729010	**MAN1107**
1.6 i.e. 16V T.S.	AR 38201, AR 67601	88	12/1996 → 01/2001	→ 496654 ;	85	12	063321802010	**MAN1102**
1.6 i.e. 16V T.S.	AR 38201, AR 67601	88	12/1996 → 01/2001		100	12	063321803010	**MAN1100**
1.6 i.e. 16V T.S.	AR 38201, AR 67601	88	12/1996 → 01/2001	496655 →;	85	12	063321810010	**MAN1147**
1.6 i.e. 16V T.S.	AR 38201, AR 67601	88	12/1996 → 01/2001		75	12	063321813010	**MAN1151**
1.6 i.e. 16V T.S.	AR 38201, AR 67601	88	12/1996 → 01/2001		120	12	063321858010	**MAN1116**
1.8 i.e. 16V	AR 32201	106	03/1998 → 01/2001		90	12	063321729010	**MAN1107**
1.8 i.e. 16V	AR 32201	106	03/1998 → 01/2001		85	12	063321802010	**MAN1102**
1.8 i.e. 16V	AR 32201	106	03/1998 → 01/2001		120	12	063321858010	**MAN1116**
1.8 i.e. 16V T.S.	AR 38401, AR 67106	103	12/1996 → 12/1998		90	12	063321729010	**MAN1107**
1.8 i.e. 16V T.S.	AR 38401, AR 67106	103	12/1996 → 12/1998	→ 496654 ;	85	12	063321802010	**MAN1102**
1.8 i.e. 16V T.S.	AR 38401, AR 67106	103	12/1996 → 12/1998		100	12	063321803010	**MAN1100**
1.8 i.e. 16V T.S.	AR 38401, AR 67106	103	12/1996 → 12/1998	496655 →;	85	12	063321810010	**MAN1147**
1.8 i.e. 16V T.S.	AR 38401, AR 67106	103	12/1996 → 12/1998		75	12	063321813010	**MAN1151**
1.8 i.e. 16V T.S.	AR 38401, AR 67106	103	12/1996 → 12/1998		120	12	063321858010	**MAN1116**
1.9 D	AR 67501	68	07/1994 → 05/1998		55	12	063321191010	**MAN330**
1.9 JTD	AR 32302	77	03/1999 → 01/2001		90	12	063321729010	**MAN1107**
1.9 JTD	AR 32302	77	03/1999 → 01/2001		85	12	063321802010	**MAN1102**
1.9 JTD	AR 32302	77	02/1999 → 01/2001		120	12	063321859010	**MAN1117**
1.9 TD	AR 33601, AR 67501	66	10/1994 → 02/1999		65	12	063321017010	**MAN352**
1.9 TD	AR 33601, AR 67501	66	10/1994 → 05/1998		55	12	063321191010	**MAN330**
2.0 16V Quadrifoglio	AR 32301	114	03/1998 → 01/2001		90	12	063321729010	**MAN1107**
2.0 16V Quadrifoglio	AR 32301	114	03/1998 → 01/2001		100	12	063321800010	**MAN1104**
2.0 16V Quadrifoglio	AR 32301	114	03/1998 → 01/2001		120	12	063321858010	**MAN1116**
2.0 16V T.S.	AR 67204	110	10/1995 → 02/1999		90	12	063321729010	**MAN1107**
2.0 16V T.S.	AR 67204	110	10/1995 → 02/1999		100	12	063321800010	**MAN1104**
2.0 16V T.S.	AR 67204	110	10/1995 → 01/2001		90	12	063321836010	**MAN1121**
2.0 16V T.S.	AR 67204	110	10/1995 → 02/1999		120	12	063321858010	**MAN1116**

		kW		i	A	V	LONG	SHORT
ALFA ROMEO								
146 (930)								
1.4 i.e. 16V T.S.	AR 33503, AR 38501	76	11/1996 → 01/2001		85	12	063321802010	**MAN1107**
1.4 i.e. 16V T.S.	AR 33503, AR 38501	76	11/1996 → 01/2001	→ 496654 ;	85	12	063321802010	**MAN1102**
1.4 i.e. 16V T.S.	AR 33503, AR 38501	76	11/1996 → 01/2001		100	12	063321803010	**MAN1100**
1.4 i.e. 16V T.S.	AR 33503, AR 38501	76	11/1996 → 01/2001	496655 →;	85	12	063321810010	**MAN1147**
1.4 i.e. 16V T.S.	AR 33503, AR 38501	76	11/1996 → 01/2001		75	12	063321813010	**MAN1151**
1.4 i.e. 16V T.S.	AR 33503, AR 38501	76	11/1996 → 01/2001		120	12	063321858010	**MAN1116**
1.6 i.e. 16V T.S.	AR 38201, AR 67601	88	11/1996 → 01/2001		90	12	063321729010	**MAN1107**
1.6 i.e. 16V T.S.	AR 38201, AR 67601	88	11/1996 → 01/2001	→ 496654 ;	85	12	063321802010	**MAN1102**
1.6 i.e. 16V T.S.	AR 38201, AR 67601	88	11/1996 → 01/2001		100	12	063321803010	**MAN1100**
1.6 i.e. 16V T.S.	AR 38201, AR 67601	88	11/1996 → 01/2001	496655 →;	85	12	063321810010	**MAN1147**
1.6 i.e. 16V T.S.	AR 38201, AR 67601	88	11/1996 → 01/2001		75	12	063321813010	**MAN1151**
1.6 i.e. 16V T.S.	AR 38201, AR 67601	88	11/1996 → 01/2001		120	12	063321858010	**MAN1116**
1.8 i.e. 16V T.S.	AR 38401, AR 67106	103	11/1996 → 02/1999		90	12	063321729010	**MAN1107**
1.8 i.e. 16V T.S.	AR 32201	106	03/1998 → 01/2001		90	12	063321729010	**MAN1107**
1.8 i.e. 16V T.S.	AR 32201	106	03/1998 → 01/2001		85	12	063321802010	**MAN1102**
1.8 i.e. 16V T.S.	AR 38401, AR 67106	103	11/1996 → 02/1999		85	12	063321802010	**MAN1102**
1.8 i.e. 16V T.S.	AR 32201	106	03/1998 → 01/2001		100	12	063321803010	**MAN1100**
1.8 i.e. 16V T.S.	AR 38401, AR 67106	103	11/1996 → 04/1998		85	12	063321810010	**MAN1147**
1.8 i.e. 16V T.S.	AR 38401, AR 67106	103	11/1996 → 02/1999		75	12	063321813010	**MAN1151**
1.8 i.e. 16V T.S.	AR 32201	106	03/1998 → 01/2001		75	12	063321813010	**MAN1151**
1.8 i.e. 16V T.S.	AR 32201	106	03/1998 → 01/2001		120	12	063321858010	**MAN1116**
1.8 i.e. 16V T.S.	AR 38401, AR 67106	103	11/1996 → 02/1999		120	12	063321858010	**MAN1116**
1.9 D	AR 67501	68	05/1995 → 09/1996		55	12	063321191010	**MAN330**
1.9 JTD	AR 32302	77	03/1999 → 01/2001		90	12	063321729010	**MAN1107**
1.9 JTD	AR 32302	77	03/1999 → 01/2001		85	12	063321802010	**MAN1102**
1.9 JTD	AR 32302	77	02/1999 → 01/2001		120	12	063321859010	**MAN1117**
1.9 TD	AR 33601, AR 67501	66	12/1994 → 02/1999		65	12	063321017010	**MAN352**
1.9 TD	AR 33601, AR 67501	66	12/1994 → 05/1998		55	12	063321191010	**MAN330**
2.0 16V Quadrifoglio	AR 32301	114	03/1998 → 01/2001		90	12	063321729010	**MAN1107**
2.0 16V Quadrifoglio	AR 32301	114	03/1998 → 01/2001		100	12	063321800010	**MAN1104**
2.0 16V Quadrifoglio	AR 32301	114	03/1998 → 01/2001		120	12	063321858010	**MAN1116**
2.0 16V T.S.	AR 67204	110	10/1995 → 01/2001		90	12	063321729010	**MAN1107**
2.0 16V T.S.	AR 67204	110	10/1995 → 01/2001		100	12	063321800010	**MAN1104**
2.0 16V T.S.	AR 67204	110	10/1995 → 01/2001		90	12	063321836010	**MAN1121**
2.0 16V T.S.	AR 67204	110	10/1995 → 01/2001		120	12	063321858010	**MAN1116**

		kW			A	V	LONG	SHORT
ALFA ROMEO								
147 (937)								
1.6 16V T.SPARK ECO (937AXA1A)	AR 32104	77	01/2001 →		90	12	063321729010	**MAN1107**
1.6 16V T.SPARK (937AXB1A)	AR 32104	88	01/2001 →		85	12	063321802010	**MAN1102**
1.6 16V T.SPARK (937AXB1A)	AR 32104	88	10/2004 →		120	12	063321858010	**MAN1116**
1.6 16V T.SPARK ECO (937AXA1A)	AR 37203	77	01/2001 →		90	12	063321729010	**MAN1107**
1.6 16V T.SPARK ECO (937AXA1A)	AR 37203	77	01/2001 →		85	12	063321802010	**MAN1102**
1.6 16V T.SPARK ECO (937AXA1A)	AR 37203	77	10/2004 →		120	12	063321858010	**MAN1116**
1.9 JTD	182 B9.000	74	06/2003 →		105	12	063321826010	**MAN1127**
1.9 JTD (937AXD1A)	937 A2.000	85	06/2001 →		90	12	063321729010	**MAN1107**
1.9 JTD (937AXD1A)	937 A2.000	85	04/2001 →		105	12	063321826010	**MAN1127**
1.9 JTD (937AXD1A)	937 A2.000	85	04/2001 →		120	12	063321859010	**MAN1117**
1.9 JTD 16V	192 B1.000	100	10/2004 →		105	12	063321826010	**MAN1127**
1.9 JTD 16V	937 A4.000	93	09/2003 → 09/2004		105	12	063321826010	**MAN1127**
1.9 JTD 16V	192 A5.000	103	07/2005 →		105	12	063321826010	**MAN1127**
1.9 JTD 16V	192 A5.000	103	11/2002 →		120	12	063377004010	**MAN7004**
1.9 JTD 16V	192 A5.000	103	11/2002 →		140	12	063377005010	**MAN7005**
1.9 JTDM	939 A7.000	85	10/2004 →		90	12	063321729010	**MAN1107**
1.9 JTDM	939 A7.000	85	10/2004 →		105	12	063321826010	**MAN1127**
1.9 JTDM	939 A7.000	85	10/2004 →		120	12	063377004010	**MAN7004**
1.9 JTDM 8V	937 A3.000	88	07/2005 →		105	12	063321826010	**MAN1127**
1.9 JTDM 16V	937 A5.000	110	07/2005 →		105	12	063321826010	**MAN1127**
2.0 16V T.SPARK (937AXC1_)	AR 32310	110	01/2001 →		90	12	063321729010	**MAN1107**
2.0 16V T.SPARK (937AXC1_)	AR 32310	110	01/2001 →		120	12	063321859010	**MAN1117**
2.0 16V T.SPARK (937AXC1_)	AR 32310	110	01/2001 → 12/2010		105	12	063534150120	**MAN2042**
155 (167)								
1.6 16V T.S.	AR 67601	88	05/1996 → 12/1997		90	12	063321729010	**MAN1107**
1.6 16V T.S.	AR 67601	88	05/1996 → 01/1998		100	12	063321803010	**MAN1100**
1.6 16V T.S.	AR 67601	88	05/1996 → 12/1997		85	12	063321810010	**MAN1147**
1.6 16V T.S.	AR 67601	88	05/1996 → 01/1998		120	12	063321858010	**MAN1116**
1.7 T.S. 16V	AR 67106	103	05/1996 → 12/1997		90	12	063321729010	**MAN1107**
1.7 T.S. 16V	AR 67106	103	05/1996 → 12/1997		85	12	063321802010	**MAN1102**
1.7 T.S. 16V	AR 67106	103	05/1996 → 12/1997		120	12	063321858010	**MAN1116**
1.8 T.S.	AR 67402	77	01/1996 → 12/1997		85	12	063321802010	**MAN1102**
1.8 T.S.	AR 67402	77	01/1996 → 12/1997		100	12	063321803010	**MAN1100**
1.8 T.S.	AR 67402	77	02/1992 → 12/1997		85	12	063321810010	**MAN1147**
1.8 T.S.	AR 67402	77	01/1996 → 12/1997		120	12	063321858010	**MAN1116**
1.9 TD (167.A3)	AR 67501	66	04/1993 → 12/1997		65	12	063321017010	**MAN352**
1.9 TD (167.A3)	AR 67501	66	04/1993 → 04/1996		55	12	063321191010	**MAN330**
2.0 16V Turbo Q4	AR 67203	140	01/1993 → 12/1997		100	12	063321395010	**MAN782**
2.0 16V Turbo Q4 (167.A2B, 167.A2C, 167.A2E)	AR 67203	137	01/1993 → 12/1997		100	12	063321395010	**MAN782**
2.0 T.S. 16V (167.A2G)	AR 67204	110	03/1995 → 12/1997		100	12	063321395010	**MAN782**

		kW			A	V	MAGNETI MARELLI LONG	MAGNETI MARELLI SHORT
ALFA ROMEO								
155 (167)								
2.0 T.S. 16V (167.A2G)	AR 67204	110	06/1995 → 12/1997		90	12	063321729010	**MAN1107**
2.0 T.S. 16V (167.A2G)	AR 67204	110	06/1995 → 12/1997		120	12	063321858010	**MAN1116**
156 (932)								
1.6 16V T.SPARK (932A4)	AR 32102, AR 32103, AR 32104, AR 67601	88	11/1997 → 03/2003		90	12	063321729010	**MAN1107**
1.6 16V T.SPARK (932A4)	AR 32102, AR 32103, AR 32104, AR 67601	88	11/1997 → 03/2003		85	12	063321802010	**MAN1102**
1.6 16V T.SPARK (932A4)	AR 32102, AR 32103, AR 32104, AR 67601	88	09/1997 → 09/2005		100	12	063321803010	**MAN1100**
1.6 16V T.SPARK (932A4)	AR 32102, AR 32103, AR 32104, AR 67601	88	11/1997 → 03/2003		120	12	063321858010	**MAN1116**
1.8 16V T.SPARK (932A3)	AR 32201	106	11/1997 → 10/2000		90	12	063321729010	**MAN1107**
1.8 16V T.SPARK (932A3)	AR 32201	106	11/1997 → 10/2000		85	12	063321802010	**MAN1102**
1.8 16V T.SPARK (932A3)	AR 32201	106	09/1997 → 10/2000		100	12	063321803010	**MAN1100**
1.8 16V T.SPARK (932A3)	AR 32201	106	11/1997 → 10/2000		120	12	063321858010	**MAN1116**
1.8 16V T.SPARK (932A31__)	AR 32205	103	10/2000 → 03/2003		90	12	063321729010	**MAN1107**
1.8 16V T.SPARK (932A31__)	AR 32205	103	10/2000 → 03/2003		85	12	063321802010	**MAN1102**
1.8 16V T.SPARK (932A31__)	AR 32205	103	10/2000 → 09/2005		100	12	063321803010	**MAN1100**
1.8 16V T.SPARK (932A31__)	AR 32205	103	10/2000 → 03/2003		120	12	063321858010	**MAN1116**
1.9 JTD (932A2B, 932A2C)	937 A2.000	85	11/2001 → 09/2005		120	12	063377004010	**MAN7004**
1.9 JTD (932B2)	AR 32302	77	11/1997 → 06/2000		90	12	063321729010	**MAN1107**
1.9 JTD (932B2)	AR 32302	77	11/1997 → 06/2000		105	12	063321826010	**MAN1127**
1.9 JTD (932B2)	AR 32302	77	09/1997 → 10/2000		120	12	063321859010	**MAN1117**
1.9 JTD 16V	192 A5.000	103	11/2002 → 09/2005		140	12	063377005010	**MAN7005**
2.0 16V T.SPARK (932A2)	AR 32301	114	11/1997 → 04/2000		90	12	063321729010	**MAN1107**
2.0 16V T.SPARK (932A2)	AR 32301	114	09/1997 → 10/2000		100	12	063321800010	**MAN1104**
2.0 16V T.SPARK (932A2)	AR 32301	114	11/1997 → 04/2000		120	12	063321858010	**MAN1116**
2.0 16V T.SPARK (932A21__)	AR 32310	110	10/2000 → 03/2002		90	12	063321729010	**MAN1107**
2.0 16V T.SPARK (932A21__)	AR 32310	110	10/2000 → 12/2001		100	12	063321800010	**MAN1104**
2.0 16V T.SPARK (932A21__)	AR 32310	110	10/2000 → 03/2002		90	12	063321836010	**MAN1121**
2.0 16V T.SPARK (932A21__)	AR 32310	110	10/2000 → 03/2002		120	12	063321858010	**MAN1116**
2.4 JTD (932B1)	AR 32501	100	11/1997 → 04/2000		90	12	063321729010	**MAN1107**
2.4 JTD (932B1)	AR 32501	100	01/1998 → 10/2000		120	12	063321859010	**MAN1117**
156 Sportwagon (932)								
1.6 16V T.SPARK. (932A4)	AR 32102, AR 32103, AR 32104, AR 67601	88	05/2000 → 03/2003		90	12	063321729010	**MAN1107**
1.6 16V T.SPARK. (932A4)	AR 32102, AR 32103, AR 32104, AR 67601	88	09/2000 → 03/2003		85	12	063321802010	**MAN1102**

		kW			A	V	LONG	SHORT
ALFA ROMEO								
156 Sportwagon (932)								
1.6 16V T.SPARK. (932A4)	AR 32102, AR 32103, AR 32104, AR 67601	88	09/2000 → 03/2003		120	12	063321858010	**MAN1116**
1.8 16V T.SPARK (932A3)	AR 32201	106	05/2000 → 10/2000		90	12	063321729010	**MAN1107**
1.8 16V T.SPARK (932A3)	AR 32201	106	05/2000 → 10/2000		85	12	063321802010	**MAN1102**
1.8 16V T.SPARK (932A3)	AR 32201	106	05/2000 → 10/2000		120	12	063321858010	**MAN1116**
1.8 16V T.SPARK (932B31__)	AR 32205	103	10/2000 → 03/2003		90	12	063321729010	**MAN1107**
1.8 16V T.SPARK (932B31__)	AR 32205	103	10/2000 → 03/2003		85	12	063321802010	**MAN1102**
1.8 16V T.SPARK (932B31__)	AR 32205	103	10/2000 → 03/2003		120	12	063321858010	**MAN1116**
1.9 JTD (932B2)	AR 32302	77	05/2000 → 10/2000		90	12	063321729010	**MAN1107**
1.9 JTD (932B2)	AR 32302	77	05/2000 → 10/2000		120	12	063321859010	**MAN1117**
1.9 JTD (932B2B, 932B2C)	937 A2.000	85	05/2001 → 05/2006		105	12	063321826010	**MAN1127**
1.9 JTD (932B2B, 932B2C)	937 A2.000	85	05/2001 → 05/2006		120	12	063377004010	**MAN7004**
1.9 JTD (932B2B__)	AR 37101	81	10/2000 → 05/2001		90	12	063321729010	**MAN1107**
1.9 JTD (932B2B__)	AR 37101	81	10/2000 → 05/2001		100	12	063321803010	**MAN1100**
1.9 JTD (932B2B__)	AR 37101	81	10/2000 → 05/2001		120	12	063321859010	**MAN1117**
2.0 16V T.SPARK (932A2)	AR 32301	114	05/2000 → 10/2000		90	12	063321729010	**MAN1107**
2.0 16V T.SPARK (932A2)	AR 32301	114	05/2000 → 10/2000		100	12	063321800010	**MAN1104**
2.0 16V T.SPARK (932A2)	AR 32301	114	05/2000 → 10/2000		120	12	063321858010	**MAN1116**
2.0 16V T.SPARK (932B21__)	AR 32310	110	10/2000 → 03/2002		90	12	063321729010	**MAN1107**
2.0 16V T.SPARK (932B21__)	AR 32310	110	10/2000 → 03/2002		100	12	063321800010	**MAN1104**
2.0 16V T.SPARK (932B21__)	AR 32310	110	10/2000 → 03/2002		90	12	063321836010	**MAN1121**
2.0 16V T.SPARK (932B21__)	AR 32310	110	10/2000 → 03/2002		120	12	063321858010	**MAN1116**
2.4 JTD (932B1)	AR 32501	100	05/2000 → 10/2000		90	12	063321729010	**MAN1107**
2.4 JTD (932B1)	AR 32501	100	05/2000 → 10/2000		120	12	063321859010	**MAN1117**
2.4 JTD (932B1B__)	839 A6.000	103	10/2000 → 05/2006		90	12	063321729010	**MAN1107**
2.4 JTD (932B1B__)	839 A6.000	103	10/2000 → 05/2006		120	12	063321859010	**MAN1117**
159 (159)								
1.8 MPI	939 A4.000	103	03/2007 →		120	12	063377026010	**MAN7026**
1.8 TBi	939 B1.000	147	05/2009 →		120	12	063377026010	**MAN7026**
1.9 JTDM 8V	937 A7.000, 939 A7.000	85	12/2005 →		140	12	063377005010	**MAN7005**
1.9 JTDM 8V	939 A1.000	88	09/2005 →		140	12	063377005010	**MAN7005**
1.9 JTDM 8V	939 A1.000	88	09/2005 →		100	12	063377017010	**MAN7017**
1.9 JTDM 8V	937 A7.000, 939 A7.000	85	09/2005 →		100	12	063377017010	**MAN7017**
1.9 JTDM 8V	939 A1.000	88	09/2005 →		120	12	063377018010	**MAN7018**
1.9 JTDM 8V	937 A7.000, 939 A7.000	85	09/2005 →		120	12	063377018010	**MAN7018**
1.9 JTDM 16V	937 A8.000, 939 A8.000	100	04/2006 →		140	12	063377005010	**MAN7005**

		kW		i	A	V	MAGNETI MARELLI LONG	MAGNETI MARELLI SHORT
ALFA ROMEO								
159 (159)								
1.9 JTDM 16V	939 A2.000	110	09/2005 →		140	12	063377005010	**MAN7005**
2.4 JTDM	939 A3.000	147	09/2005 →		150	12	063377015010	**MAN7015**
2.4 JTDM	939 A9.000	154	05/2007 →		150	12	063377015010	**MAN7015**
2.4 JTDM Q4	939 A9.000	154	07/2007 →		150	12	063377015010	**MAN7015**
3.2 JTS Q4	939 A.000	191	12/2005 →		150	12	063377014010	**MAN7014**
159 Sportwagon (159)								
1.8 MPI	939 A4.000	103	03/2007 →		120	12	063377026010	**MAN7026**
1.8 TBi	939 B1.000	147	05/2009 →		120	12	063377026010	**MAN7026**
1.9 JTDM 8V	937 A7.000	85	03/2006 →		140	12	063377005010	**MAN7005**
1.9 JTDM 8V	937 A7.000	85	03/2006 →		100	12	063377017010	**MAN7017**
1.9 JTDM 8V	937 A7.000	85	03/2006 →		120	12	063377018010	**MAN7018**
1.9 JTDM 8V	939 A1.000	88	03/2006 →		140	12	063377005010	**MAN7005**
1.9 JTDM 8V	939 A1.000	88	03/2006 →		100	12	063377017010	**MAN7017**
1.9 JTDM 8V	939 A1.000	88	03/2006 →		120	12	063377018010	**MAN7018**
1.9 JTDM 16V	937 A8.000	100	04/2006 →		140	12	063377005010	**MAN7005**
1.9 JTDM 16V	939 A2.000	110	03/2006 →		140	12	063377005010	**MAN7005**
2.4 JTDM	939 A3.000	147	03/2006 →		150	12	063377015010	**MAN7015**
2.4 JTDM	939 A9.000	154	05/2007 →		150	12	063377015010	**MAN7015**
2.4 JTDM Q4	939 A9.000	154	09/2007 →		150	12	063377015010	**MAN7015**
3.2 JTS Q4	939 A.000	191	03/2006 →		150	12	063377014010	**MAN7014**
164 (164)								
2.0 Turbo	AR 06476	129	02/1988 → 09/1992		100	12	063321395010	**MAN782**
2.0 Turbo	AR 06476	128	01/1988 → 09/1992		100	12	063321395010	**MAN782**
166 (936)								
2.0 T.Spark (936A3A__)	AR 34103	114	09/1998 → 06/2000		90	12	063321729010	**MAN1107**
2.0 T.Spark (936A3A__)	AR 34103	114	09/1998 → 10/2000		100	12	063321800010	**MAN1104**
2.0 T.Spark (936A3A__)	AR 34103	114	09/1998 → 06/2000		120	12	063321858010	**MAN1116**
2.0 T.Spark (936A3B__)	AR 36301	110	10/2000 →	→ 1385143	90	12	063321729010	**MAN1107**
2.0 T.Spark (936A3B__)	AR 36301	110	10/2000 →		100	12	063321800010	**MAN1104**
2.0 T.Spark (936A3B__)	AR 36301	110	10/2000 →		90	12	063321836010	**MAN1121**
2.0 T.Spark (936A3B__)	AR 36301	110	10/2000 →		120	12	063321858010	**MAN1116**
2.4 JTD (936A2A__)	AR 34202	100	09/1998 → 06/2000		90	12	063321729010	**MAN1107**
2.4 JTD (936A2A__)	AR 34202	100	09/1998 → 10/2000		120	12	063321859010	**MAN1117**
2.4 JTD (936A2B__)	839 A6.000	103	10/2000 →		90	12	063321729010	**MAN1107**
2.4 JTD (936A2B__)	839 A6.000	103	10/2000 →		120	12	063321859010	**MAN1117**
33 (905)								
1.8 TD	VM 82 A	54	01/1986 → 12/1989		65	12	063320049010	**MAN771**
1.8 TD	VM 82 A	54	01/1986 → 12/1989		65	12	063321019010	**MAN274**
33 (907A)								
1.8 TD (907A5)	VM 96 A	62	07/1990 → 09/1994		65	12	063321017010	**MAN352**
33 Sportwagon (905A)								
1.8 TD	VM 96 A	62	01/1988 → 12/1989		65	12	063320049010	**MAN771**

		kW		i	A	V	LONG	SHORT
ALFA ROMEO								
33 Sportwagon (905A)								
1.8 TD	VM 96 A	62	01/1988 → 12/1989		65	12	063321019010	**MAN274**
6 (119)								
2.5 TD	VM-HR 588 HT	77	01/1983 → 05/1986		65	12	063321021010	**MAN354**
75 (162B)								
1.6 (162.B2B, 162.B2C)	AR 06100	81	01/1988 → 09/1989		65	12	063320049010	**MAN771**
1.6 (162.B2B, 162.B2C)	AR 06100	81	01/1988 → 09/1989		65	12	063321021010	**MAN354**
2.0 TD (162.BD, 162.BG)	VM 80 A	70	05/1985 → 09/1992		65	12	063320049010	**MAN771**
2.0 TD (162.BD, 162.BG)	VM 80 A	70	05/1985 → 12/1989		65	12	063321021010	**MAN354**
2.4 TD	VM 81 A	82	01/1989 → 02/1992		65	12	063320049010	**MAN771**
90 (162)								
2.4 TD (162.B5)	VM 81 A	81	10/1984 → 07/1987		65	12	063321021010	**MAN354**
ALFETTA (116)								
2.0 TD (116.BA)	VM4HT/2	60	01/1982 → 03/1983		65	12	063321021010	**MAN354**
2.4 TD (116.B3)	VM4HT 2.4	70	04/1983 → 12/1984		65	12	063321021010	**MAN354**
AR 6 Furgonato (280)								
2.4 D	8144.61.200	53	04/1985 → 02/1986		65	12	063321021010	**MAN354**
2.4 D	8144.61.200	53	04/1985 → 02/1986		55	12	063321042010	**MAN283**
2.4 TD	8144.21.220	68	09/1986 → 12/1989		65	12	063321021010	**MAN354**
2.4 TD	8144.21.220	68	09/1986 → 12/1989		55	12	063321042010	**MAN283**
2.5 D	8144.67.220	55	03/1986 → 12/1989		65	12	063321021010	**MAN354**
2.5 D	8144.67.220	55	03/1986 → 12/1989		55	12	063321041010	**MAN284**
AR 8 Furgonato (280)								
2.4 D	8140.61.200	53	01/1982 → 08/1986		65	12	063320049010	**MAN771**
2.4 D	8140.61.200	53	01/1982 → 08/1986		65	12	063321019010	**MAN274**
2.4 D	8140.61.200	53	01/1984 → 08/1986		65	12	063321021010	**MAN354**
2.4 D	8140.61.200	53	01/1982 → 08/1986		55	12	063321042010	**MAN283**
2.4 TD	8140.21.200 D.I.	68	04/1985 → 12/1988		55	12	063321044010	**MAN286**
2.5 D	8144.67.220	55	09/1986 → 12/1989		65	12	063320049010	**MAN771**
2.5 D	8144.67.220	55	09/1986 → 12/1989		65	12	063321021010	**MAN354**
2.5 D	8144.67.220	55	09/1986 → 12/1989		55	12	063321042010	**MAN283**
AR 8 Pianale piatto/Telaio (280)								
2.4 TD	8140.21.200 D.I.	68	04/1985 → 12/1988		55	12	063321044010	**MAN286**
2.5 D	8144.67.220	55	09/1986 → 12/1988		65	12	063320049010	**MAN771**
2.5 D	8144.67.220	55	09/1986 → 12/1988		65	12	063321021010	**MAN354**
2.5 D	8144.67.220	55	09/1986 → 12/1988		55	12	063321042010	**MAN283**
BRERA								
1.8 TBi	939 B1.000	147	05/2009 →		120	12	063377026010	**MAN7026**
2.4 JTDM 20V	939 A3.000	147	02/2006 →		150	12	063377015010	**MAN7015**
2.4 JTDM 20V	939 A9.000	154	07/2007 →		150	12	063377015010	**MAN7015**
3.2 JTS Q4	939 A.000	191	01/2006 →		150	12	063377014010	**MAN7014**
GIULIETTA								
2.0 TD	VM 4 HT	61	01/1983 → 12/1985		65	12	063321021010	**MAN354**

		kW			A	V	LONG	SHORT
ALFA ROMEO								
GIULIETTA (940)								
1.8 TBi	940 A1.000	173	04/2010 →		120	12	063377026010	**MAN7026**
GT								
1.9 JTD	937 A5.000	110	11/2003 →	⊛	105	12	063321826010	**MAN1127**
1.9 JTD	937 A6.000	125	05/2008 →		105	12	063321826010	**MAN1127**
GTV (916C_)								
1.8 16V (916C3)	AR 32201	106	05/1998 →	⊛	90	12	063321729010	**MAN1107**
1.8 16V (916C3)	AR 32201	106	05/1998 →	⊛	85	12	063321802010	**MAN1102**
1.8 16V (916C3)	AR 32201	106	05/1998 →	⊛	120	12	063321858010	**MAN1116**
2.0 JTS	937 A1.000	121	04/2003 →		90	12	063321729010	**MAN1107**
2.0 JTS	937 A1.000	121	04/2003 →		120	12	063321858010	**MAN1116**
2.0 T.SPARK 16V (916. C2__, 916C2C00)	AR 16201, AR 32310	110	06/1995 →		90	12	063321729010	**MAN1107**
2.0 T.SPARK 16V (916. C2__, 916C2C00)	AR 16201, AR 32310	110	06/1995 →		100	12	063321800010	**MAN1104**
2.0 T.SPARK 16V (916. C2__, 916C2C00)	AR 16201, AR 32310	110	06/2002 →		120	12	063321858010	**MAN1116**
2.0 T.SPARK 16V (916C2C)	AR 32301	114	05/1998 → 08/2000		90	12	063321729010	**MAN1107**
2.0 T.SPARK 16V (916C2C)	AR 32301	114	05/1998 → 08/2000		100	12	063321800010	**MAN1104**
2.0 T.SPARK 16V (916C2C)	AR 32301	114	05/1998 → 08/2000		120	12	063321858010	**MAN1116**
MITO (955)								
1.3 JTDM	199 A3.000	66	10/2008 →	⊛	75	12	063358062010	**MAN1098**
1.3 JTDM	199 A3.000	66	09/2008 →	⊛	90	12	063377019010	**MAN7019**
1.3 JTDM	199 B1.000	70	10/2009 →	⊛	90	12	063377019010	**MAN7019**
1.3 JTDM	199 B1.000	70	10/2009 →		105	12	063377025010	**MAN7025**
1.3 JTDM	199 B1.000	70	10/2009 →	⊛	120	12	063377028010	**MAN7028**
1.4	198 A4.000	88	09/2008 →	⊛	90	12	063377030010	**MAN7030**
1.4	199 A6.000	70	09/2008 →		120	12	063377426010	**MAN7426**
1.4	955 A1.000	58	09/2008 →		120	12	063377426010	**MAN7426**
1.4 TB	199 A8.000	114	09/2008 →	⊛	120	12	063377426010	**MAN7426**
1.4 Turbo	198 A1.000	110	09/2008 →	⊛	90	12	063377030010	**MAN7030**
1.6 JTDM	198 A2.000, 955 A3.000	88	09/2008 →	⊛	100	12	063377017010	**MAN7017**
1.6 JTDM	955 A4.000	85	09/2008 →		100	12	063377017010	**MAN7017**
1.6 JTDM	955 A4.000	85	09/2008 →		120	12	063377018010	**MAN7018**
1.6 JTDM	198 A2.000, 955 A3.000	88	09/2008 →		120	12	063377018010	**MAN7018**
1.6 JTDM	198 A2.000, 955 A3.000	88	09/2008 →		90	12	063377030010	**MAN7030**
SPIDER (916S_)								
1.8 16V (916S3)	AR 32201	106	05/1998 → 02/2003	⊛	90	12	063321729010	**MAN1107**
1.8 16V (916S3)	AR 32201	106	05/1998 → 02/2003	⊛	85	12	063321802010	**MAN1102**
1.8 16V (916S3)	AR 32201	106	05/1998 → 02/2003	⊛	120	12	063321858010	**MAN1116**
2.0 T.SPARK 16V (916S2B)	AR 32301	114	05/1998 → 08/2000		90	12	063321729010	**MAN1107**
2.0 T.SPARK 16V (916S2B)	AR 32301	114	05/1998 → 08/2000		100	12	063321800010	**MAN1104**
2.0 T.SPARK 16V (916S2B)	AR 32301	114	05/1998 → 08/2000		120	12	063321858010	**MAN1116**
2.0 T.SPARK 16V (916S2C00)	AR 16201, AR 32310	110	06/1995 → 04/2005		100	12	063321800010	**MAN1104**
3.2 V6 24V	936 A6.000	176	04/2003 → 04/2005		150	12	063377014010	**MAN7014**

		kW			A	V	LONG	SHORT
ALFA ROMEO								
SPIDER (939)								
1.8 TBi	939 B1.000	147	05/2009 →		120	12	063377026010	**MAN7026**
2.4 JTDM	939 A3.000	147	04/2007 →		150	12	063377015010	**MAN7015**
2.4 JTDM	939 A3.000	154	03/2008 →		150	12	063377015010	**MAN7015**
3.2 JTS Q4	939 A.000	191	09/2006 →		150	12	063377014010	**MAN7014**
AUDI								
A3 (8L1)								
1.9 TDI	AGR, ALH	66	05/1998 → 06/2001		90	12	063533250010	**MAN2037**
1.9 TDI	AHF, ASV	81	05/1998 → 06/2001		90	12	063533250010	**MAN2037**
1.9 TDI	ASZ	96	08/2000 → 06/2003		90	12	063533250010	**MAN2037**
1.9 TDI	ATD, AXR	74	10/2000 → 06/2003		90	12	063533250010	**MAN2037**
1.9 TDI quattro	ASZ	96	08/2000 → 06/2003		90	12	063533250010	**MAN2037**
AUSTIN								
1000-Series MK II								
1100		32	01/1970 → 12/1974		55	12	054022384010	**MAN653**
1300		39	01/1970 → 12/1974		55	12	054022384010	**MAN653**
1300 GT		50	01/1970 → 12/1974		55	12	054022384010	**MAN653**
ALLEGRO 2 volumi								
1.1	10 H	33	05/1973 → 12/1977		55	12	054022384010	**MAN653**
1.1	10 H	36	01/1975 → 12/1977		55	12	054022384010	**MAN653**
1.3	12 H	46	01/1979 → 12/1982		55	12	054022384010	**MAN653**
1.3	12 L	43	01/1975 → 04/1977		55	12	054022384010	**MAN653**
1.3	12 H	40	05/1973 → 12/1977		55	12	054022384010	**MAN653**
1.5 Super	14 H	50	05/1973 → 12/1977		55	12	054022384010	**MAN653**
1750	17 LA	67	01/1975 → 12/1977		55	12	054022384010	**MAN653**
ALLEGRO 3 volumi								
1.3	12 H	46	12/1979 → 03/1982		55	12	054022384010	**MAN653**
MAESTRO (XC)								
1.3	12 HE	50	01/1986 → 09/1992		55	12	063324157010	**MAN102**
1.3		47	01/1986 → 09/1992		55	12	063324157010	**MAN102**
1.3	12 H, 12 H999AA, 12 HC32	46	03/1983 → 08/1985		55	12	063324157010	**MAN102**
1.3 LS	12 H	49	03/1983 → 08/1988		55	12	063324157010	**MAN102**
1.6 Mayfair HLS	16 HC37	61	10/1984 → 08/1988		55	12	054022598010	**MAN666**
1.6 MG	16 HA03AL	72	01/1984 → 08/1985		55	12	054022598010	**MAN666**
1.6 MG	16 HA35AL	73	10/1984 → 08/1988		55	12	054022598010	**MAN666**
1.9 D		44	01/1986 → 09/1992		55	12	054022598010	**MAN666**
2.0 EFi	20 HA50AA, 20 HC51AA, 20 HC81	83	10/1984 → 08/1990		55	12	063324157010	**MAN102**
MAXI								
1500	14 H	50	04/1969 → 12/1977		55	12	054022384010	**MAN653**
1750	17 H	53	04/1969 → 12/1977		55	12	054022384010	**MAN653**
1750 HL	17 LA	66	10/1972 → 12/1977		55	12	054022384010	**MAN653**

		kW		i	A	V	MAGNETI MARELLI LONG	MAGNETI MARELLI SHORT
AUSTIN								
METRO								
1.0	99 H	33	10/1980 → 04/1990		55	12	063324157010	**MAN102**
1.0	99 H	30	10/1980 → 04/1990		55	12	063324157010	**MAN102**
1.0	99 H	30	01/1985 → 04/1990		45	12	063324199010	**MAN107**
1.0	99 H	33	01/1985 → 04/1990		45	12	063324199010	**MAN107**
1.0 Surf HLE	99 HA65P	35	10/1980 → 04/1990		55	12	063324157010	**MAN102**
1.0 Surf HLE	99 HA65P	35	01/1985 → 04/1990		45	12	063324199010	**MAN107**
1.3	12 H996AA	52	10/1980 → 12/1985		55	12	063324157010	**MAN102**
1.3	12 HA83AA	51	10/1980 → 04/1990		55	12	063324157010	**MAN102**
1.3	12 H996AA	52	01/1985 → 12/1985		45	12	063324199010	**MAN107**
1.3	12 HA83AA	51	01/1985 → 04/1990		45	12	063324199010	**MAN107**
1.3 L,HLE,S	12 H	44	10/1980 → 04/1990		55	12	063324157010	**MAN102**
1.3 Surf (XF)	12 HC21AA	44	11/1985 → 04/1990		55	12	063324157010	**MAN102**
1.3 Turbo	12 HA85AA	66	10/1983 → 04/1990		55	12	063324157010	**MAN102**
1.3 Turbo	12 HA85AA	66	01/1985 → 04/1990		45	12	063324199010	**MAN107**
MINI								
0.9		25	01/1970 → 08/1980		55	12	054022384010	**MAN653**
MINI MK I								
1000	99 H	29	01/1970 → 08/1981		55	12	054022384010	**MAN653**
1000		26	01/1969 → 12/1981		55	12	054022384010	**MAN653**
1000		26	01/1982 → 09/1984		45	12	063324199010	**MAN107**
1000 Mayfair	99 H997P, 99 HA53P, 99 HC20P	31	08/1982 → 09/1992		45	12	063324199010	**MAN107**
1000 Mayfair Sport	99 HD81	30	09/1988 → 09/1992		45	12	063324199010	**MAN107**
1275 GT		39	01/1970 → 12/1974		55	12	054022384010	**MAN653**
850	BMC Serie A	25	01/1970 → 04/1977		55	12	054022384010	**MAN653**
MONTEGO (XE)								
2.0	20 H, 20 HSC	74	04/1984 → 12/1986		55	12	054022384010	**MAN653**
2.0	20 H, 20 HSC	74	04/1984 → 12/1986		55	12	063324157010	**MAN102**
2.0 Mayfair	20 H(EFI)	83	04/1984 → 12/1986		55	12	054022384010	**MAN653**
2.0 Mayfair	20 H(EFI)	83	04/1984 → 12/1986		55	12	063324157010	**MAN102**
2.0 Turbo	20 HC85	110	04/1984 → 08/1988		55	12	063324157010	**MAN102**
MONTEGO Station wagon (XE)								
2.0	20 H, 20 HSC	74	10/1984 → 12/1986		55	12	054022384010	**MAN653**
2.0 HLI	20 H	83	10/1984 → 08/1988		55	12	054022384010	**MAN653**
AUTOBIANCHI								
A 112								
0.9	A112A 5.000	33	01/1976 → 12/1978		55	12	063341454010	**MAN1014**
0.9 E	A112A 5.000	34	01/1975 → 12/1977		55	12	063341454010	**MAN1014**
0.9 Junior	A112A 5.000, A112B2.000	31	07/1975 → 08/1985		55	12	063341454010	**MAN1014**
1.0 Abarth	A112A2.000	51	03/1975 → 12/1984		55	12	063341454010	**MAN1014**
1.0 E,Elite,LX	A112B1.000	35	12/1977 → 08/1985		55	12	063341454010	**MAN1014**
Y10								
1.0	156A2.000	33	05/1985 →		45	12	063321000010	**MAN342**

		kW			A	V	LONG	SHORT
AUTOBIANCHI								
Y10								
1.0	156A2.000	33	05/1985 →		55	12	063321067010	**MAN300**
1.0 4WD	156A3.000	37	12/1986 →		45	12	063321000010	**MAN342**
1.0 Cat.	156A2.246	33	10/1987 →		45	12	063321000010	**MAN342**
1.0 Cat.	156A2.246	33	10/1987 →		55	12	063321067010	**MAN300**
1.1	156C.000	42	07/1989 →		55	12	063321067010	**MAN300**
1.1	156C.000	42	07/1989 →		65	12	063321173010	**MAN331**
1.1 4WD	156C.000	42	07/1989 →		55	12	063321067010	**MAN300**
1.1 i.e. Cat.	156C.046	42	09/1990 →		55	12	063321067010	**MAN300**
1.1 i.e. Cat.	156C.046	42	09/1990 →		65	12	063321173010	**MAN331**
CHEVROLET								
AVEO Tre volumi (T200, T250)								
1.4	F14D3	69	03/2006 →		85	12	063532630010	**MAN2630**
KALOS								
1.2	B12S1	53	03/2005 →		85	12	063532630010	**MAN2630**
1.4	F14S3	61	03/2005 →		85	12	063532630010	**MAN2630**
1.4 16V	F14D3	69	03/2005 →		85	12	063532630010	**MAN2630**
KALOS Tre Volumi								
1.4 16V	F14D3	69	03/2005 →		85	12	063532630010	**MAN2630**
LACETTI								
1.4 16V	F14D3	70	03/2005 →		85	12	063532630010	**MAN2630**
REZZO								
1.6	A16DMS	79	08/2005 →		85	12	063532633010	**MAN2633**
1.6	A16DMS	77	03/2005 →		85	12	063532633010	**MAN2633**
2.0	T20SED	89	03/2005 →		85	12	063532637010	**MAN2637**
CITROEN								
BERLINGO								
1.6	NFR (TU5JP4B)	66	04/2008 →		75	12	063341734010	**MAN1166**
1.6	NFU (TU5JP4)	80	04/2008 →		90	12	063321734010	**MAN963**
1.6	NFU (TU5JP4)	80	04/2008 →		75	12	063341734010	**MAN1166**
BERLINGO (MF)								
1.1 i (MFHDZ)	HDZ (TU1M), HFX (TU1JP)	44	07/1996 →		90	12	063321734010	**MAN963**
1.1 i (MFHDZ)	HDZ (TU1M), HFX (TU1JP)	44	07/1996 →		75	12	063341740010	**MAN1163**
1.1 i (MFHDZ)	HDZ (TU1M), HFX (TU1JP)	44	07/1996 → 11/2002		70	12	063533350070	**MAN2005**
1.4		53	11/2002 → 10/2005		90	12	063321734010	**MAN963**
1.4		53	11/2002 → 10/2005		75	12	063341734010	**MAN1166**
1.4		54	05/2005 →		90	12	063321734010	**MAN963**
1.4		54	05/2005 →		75	12	063341734010	**MAN1166**
1.4 bivalent		48	11/2002 →		90	12	063321734010	**MAN963**
1.4 bivalent		48	11/2002 →		75	12	063341734010	**MAN1166**
1.4 GNC		48	11/2002 →		90	12	063321734010	**MAN963**
1.4 GNC		48	11/2002 →		75	12	063341734010	**MAN1166**
1.4 i (MFKFX)	KFW (TU3JP), KFX (TU3JP)	55	07/1996 →		90	12	063321734010	**MAN963**

		kW			A	V	LONG	SHORT
CITROEN								
BERLINGO (MF)								
1.4 i (MFKFX)	KFW (TU3JP), KFX (TU3JP)	55	07/1996 → 11/2002		75	12	063341740010	**MAN1163**
1.4 i (MFKFX)	KFW (TU3JP), KFX (TU3JP)	55	07/1996 → 11/2002		70	12	063533350070	**MAN2005**
1.4 i bivalent	KFW (TU3JP)	55	04/2003 →		90	12	063321734010	**MAN963**
1.4 i bivalent	KFW (TU3JP)	55	04/2003 →		75	12	063341734010	**MAN1166**
1.6 16V	NFU (TU5JP4)	81	11/2002 →		90	12	063321734010	**MAN963**
1.6 16V (MFNFU)	NFU (TU5JP4)	80	10/2000 →		90	12	063321734010	**MAN963**
1.6 16V (MFNFU)	NFU (TU5JP4)	80	11/2002 →		75	12	063341734010	**MAN1166**
1.6 16V (MFNFU)	NFU (TU5JP4)	80	10/2000 → 11/2002		75	12	063341740010	**MAN1163**
1.9 D (MFWJZ)	WJY (DW8B), WJZ (DW8)	51	07/1998 →		90	12	063321734010	**MAN963**
1.9 D 4WD (MFWJZ)	WJZ (DW8)	51	07/1998 →		90	12	063321734010	**MAN963**
1.6	NFR (TU5JP4B)	66	04/2008 →		75	12	063341734010	**MAN1166**
1.6	NFU (TU5JP4)	80	04/2008 →		75	12	063341734010	**MAN1166**
BERLINGO Furgonato (M_)								
1.1 i (MAHDZ, MBHDZ)	HDZ (TU1M)	44	07/1996 → 11/2002		75	12	063341740010	**MAN1163**
1.1 i (MAHDZ, MBHDZ)	HDZ (TU1M)	44	07/1996 → 11/2002		70	12	063533350070	**MAN2005**
1.4 bivalent		48	11/2002 →		90	12	063321734010	**MAN963**
1.4 bivalent		48	11/2002 →		75	12	063341734010	**MAN1166**
1.4 i (MBKFX)	KFW (TU3JP), KFX (TU3JP)	55	07/1996 →		90	12	063321734010	**MAN963**
1.4 i (MBKFX)	KFW (TU3JP), KFX (TU3JP)	55	07/1996 → 11/2002		75	12	063341740010	**MAN1163**
1.4 i (MBKFX)	KFW (TU3JP), KFX (TU3JP)	55	07/1996 → 11/2002		70	12	063533350070	**MAN2005**
1.4 i bivalent	KFW (TU3JP)	55	04/2003 →		90	12	063321734010	**MAN963**
1.4 i bivalent	KFW (TU3JP)	55	04/2003 →		75	12	063341734010	**MAN1166**
1.6 16V	NFU (TU5JP4)	80	10/2000 →		90	12	063321734010	**MAN963**
1.6 16V	NFU (TU5JP4)	80	11/2002 →		75	12	063341734010	**MAN1166**
1.6 16V	NFU (TU5JP4)	80	10/2000 → 11/2002		75	12	063341740010	**MAN1163**
1.9 D 70 (MBWJZ, MCWJZ)	WJZ (DW8)	51	04/1999 →		90	12	063321734010	**MAN963**
1.9 D 70 4WD	WJZ (DW8)	51	07/1998 →		90	12	063321734010	**MAN963**
C1 (PM_, PN_)								
1.4 HDi	DV4D	40	06/2005 →		90	12	063321734010	**MAN963**
C2 (JM_)								
1.1	HFX (TU1JP)	44	09/2003 →		90	12	063377300010	**MAN7300**
1.1	HFX (TU1JP)	44	09/2003 →		80	12	063377301010	**MAN7301**
1.4	KFV (TU3JP)	54	09/2003 →		80	12	063377301010	**MAN7301**
1.4 16V	KFU (ET3J4)	65	06/2006 →		80	12	063377301010	**MAN7301**
1.6	NFU (TU5JP4)	80	09/2003 →		80	12	063377301010	**MAN7301**
1.6 VTS	NFS (TU5JP4S)	90	01/2005 →		80	12	063377301010	**MAN7301**
C3 (FC_)								
1.1 i	HFX (TU1JP)	44	02/2002 →		90	12	063377300010	**MAN7300**
1.1 i	HFX (TU1JP)	44	02/2002 →		80	12	063377301010	**MAN7301**
1.4 16V	KFU (ET3J4)	65	12/2003 →		80	12	063377301010	**MAN7301**
1.4 i	KFV (TU3JP)	54	02/2002 →		80	12	063377301010	**MAN7301**

		kW		i	A	V	MAGNETI MARELLI LONG	MAGNETI MARELLI SHORT
CITROEN								
C3 (FC_)								
1.4 i Bivalent	KFV (TU3JP)	54	02/2002 →		80	12	063377301010	**MAN7301**
1.6 16V	NFU (TU5JP4)	80	02/2002 →		90	12	063377300010	**MAN7300**
1.6 16V	NFU (TU5JP4)	80	02/2002 →		80	12	063377301010	**MAN7301**
C3 II								
1.1		44	11/2009 →		90	12	063377300010	**MAN7300**
1.1		44	11/2009 →		80	12	063377301010	**MAN7301**
C3 Pluriel (HB_)								
1.4	KFV (TU3JP)	54	05/2003 →		90	12	063377300010	**MAN7300**
1.4	KFV (TU3JP)	54	05/2005 →		80	12	063377301010	**MAN7301**
1.6	NFU (TU5JP4)	80	05/2003 →		90	12	063377300010	**MAN7300**
1.6	NFU (TU5JP4)	80	05/2003 →		80	12	063377301010	**MAN7301**
C4 (LC_)								
1.4 16V	KFU (ET3J4)	65	11/2004 →		80	12	063377301010	**MAN7301**
1.6 16V	NFU (TU5JP4)	80	11/2004 →		90	12	063377300010	**MAN7300**
1.6 16V	NFU (TU5JP4)	80	11/2004 →		80	12	063377301010	**MAN7301**
1.6 16V Bio-Flex	NFU (TU5JP4)	80	09/2007 →		80	12	063377301010	**MAN7301**
2.0 16V	RFN (EW10J4)	100	11/2004 →		75	12	063341734010	**MAN1166**
C4 Coupe (LA_)								
1.4 16V	KFU (ET3J4)	65	11/2004 →		80	12	063377301010	**MAN7301**
1.6 16V	NFU (TU5JP4)	80	11/2004 →		80	12	063377301010	**MAN7301**
2.0 16V	RFN (EW10J4)	100	11/2004 →		75	12	063341734010	**MAN1166**
C5 (DC_)								
1.8 16V (DC6FZB, DC6FZE)	6FZ (EW7J4)	85	03/2001 → 08/2004		90	12	063321734010	**MAN963**
1.8 16V (DC6FZB, DC6FZE)	6FZ (EW7J4)	85	03/2001 → 08/2004		75	12	063341734010	**MAN1166**
C5 (RC_)								
1.8 16V (RC6FZB)	6FZ (EW7J4)	85	10/2004 →		75	12	063341734010	**MAN1166**
C5 (DC_)								
2.0 16V (DCRFNC, DCRFNF)	RFN (EW10J4)	100	03/2001 → 08/2004		90	12	063321734010	**MAN963**
2.0 16V HPi (DCRLZB)	RLZ (EW10D)	103	03/2001 → 08/2004		90	12	063321734010	**MAN963**
C5 (RC_)								
2.0 16V (RCRFJB, RCRFJC)	EW10A, RFJ (EW10A)	103	09/2004 →		90	12	063321734010	**MAN963**
C5 Break (DE_)								
1.8 16V (DE6FZB, DE6FZE)	6FZ (EW7J4)	85	06/2001 → 08/2004		90	12	063321734010	**MAN963**
1.8 16V (DE6FZB, DE6FZE)	6FZ (EW7J4)	85	06/2001 → 08/2004		75	12	063341734010	**MAN1166**
C5 Break (RE_)								
1.8 16V (RE6FZB)	6FZ (EW7J4)	85	10/2004 →		75	12	063341734010	**MAN1166**
C5 Break (DE_)								
2.0 16V (DERFNF)	RFN (EW10J4)	100	06/2001 → 08/2004		90	12	063321734010	**MAN963**
2.0 16V HPi (DERLZB)	RLZ (EW10D)	103	06/2001 → 08/2004		90	12	063321734010	**MAN963**
C5 Break (RE_)								
2.0 16V (RERFJB, RERFJC)	RFJ (EW10A)	103	09/2004 →		90	12	063321734010	**MAN963**
C8 (EA_, EB_)								
2.0	RFN (EW10J4)	100	07/2002 →		90	12	063321734010	**MAN963**
2.0	RFN (EW10J4)	100	07/2002 →		75	12	063341734010	**MAN1166**

		kW		i	A	V	LONG	SHORT
CITROEN								
C8 (EA_, EB_)								
2.2	3FZ (EW12J4)	116	07/2002 →		90	12	063321734010	**MAN963**
2.2	3FZ (EW12J4)	116	07/2002 →		75	12	063341734010	**MAN1166**
JUMPER Autobus (230P)								
2.8 D	8140.63 (F28D)	64	01/1999 → 02/2002		80	12	063388505010	**MAN966**
2.8 HDi	8140.43S	94	09/2000 → 04/2002		120	12	063310508010	**MAN958**
2.8 HDi 4x4	8140.43S	94	09/2000 → 04/2002		120	12	063310508010	**MAN958**
JUMPER Autobus (244, Z_)								
2.8 HDi	8140.43S	94	04/2002 → 06/2006		120	12	063310508010	**MAN958**
JUMPER Furgonato (230L)								
2.8 D	8140.63 (F28D)	64	01/1999 → 02/2002		80	12	063388505010	**MAN966**
2.8 HDi	8140.43S	94	09/2000 → 04/2002		120	12	063310508010	**MAN958**
2.8 HDi 4x4	8140.43S	94	09/2000 → 04/2002		120	12	063310508010	**MAN958**
JUMPER Furgonato (244)								
2.8 HDi	8140.43S	94	04/2002 → 06/2006		120	12	063310508010	**MAN958**
2.8 HDi	8140.43N	107	05/2004 → 06/2006		120	12	063310508010	**MAN958**
2.8 HDi 4x4	8140.43S	94	04/2002 → 06/2006		120	12	063310508010	**MAN958**
JUMPER Pianale piatto/Telaio (230)								
2.8 D	8140.63 (F28D)	64	01/1999 → 02/2002		80	12	063388505010	**MAN966**
2.8 HDi	8140.43S	94	09/2000 → 04/2002		120	12	063310508010	**MAN958**
2.8 HDi	8140.43S	93	10/2000 → 01/2002		120	12	063310508010	**MAN958**
JUMPER Pianale piatto/Telaio (244)								
2.8 HDi	8140.43S	94	04/2002 → 06/2006		120	12	063310508010	**MAN958**
2.8 HDi	8140.43N	107	05/2004 → 06/2006		120	12	063310508010	**MAN958**
2.8 HDi		107	04/2004 → 06/2006		120	12	063310508010	**MAN958**
2.8 HDi 4x4	F28TDCR	94	02/2002 → 06/2006		120	12	063310508010	**MAN958**
JUMPY (U6U)								
1.6	1580 SPI, 220 A2.000	58	10/1995 →		120	12	063321854010	**MAN955**
JUMPY Furgonato (BS_, BT_, BY_, BZ_)								
1.6 i	1580 SPI, 220 A2.000	58	10/1995 →		120	12	063321854010	**MAN955**
NEMO Furgonato (AA_)								
1.4	KFV (TU3A)	54	02/2008 →		90	12	063321734010	**MAN963**
1.4	KFV (TU3A)	54	02/2008 →		75	12	063341734010	**MAN1166**
NEMO Station wagon								
1.4	KFV (TU3A)	54	04/2009 →		75	12	063341734010	**MAN1166**
SAXO (S0, S1)								
1.0 X	CDZ (TU9M)	33	05/1996 → 09/2003		70	12	063533350070	**MAN2005**
1.0 X	CDZ (TU9M)	37	05/1998 → 09/2003		70	12	063533350070	**MAN2005**
1.1 X,SX	HDZ (TU1M)	40	05/1996 → 09/2003		70	12	063533350070	**MAN2005**
1.1 X,SX	HDZ (TU1M)	40	01/2000 → 09/2003		75	12	063341740010	**MAN1163**
1.1 X,SX	HDZ (TU1M), HFX (TU1JP)	44	01/2000 → 09/2003		75	12	063341734010	**MAN1166**
1.1 X,SX	HDZ (TU1M), HFX (TU1JP)	44	01/2000 → 09/2003		75	12	063341740010	**MAN1163**

		kW		i	A	V	MAGNETI MARELLI LONG	MAGNETI MARELLI SHORT
CITROEN								
SAXO (S0, S1)								
1.1 X,SX	HDZ (TU1M), HFX (TU1JP)	44	03/2000 → 09/2003		70	12	063533350070	**MAN2005**
1.4 VTS	KFW (TU3JP), KFX (TU3JP)	55	01/2000 → 06/2003		75	12	063341734010	**MAN1166**
1.4 VTS	KFW (TU3JP), KFX (TU3JP)	55	01/2000 → 06/2003		75	12	063341740010	**MAN1163**
1.4 VTS	KFW (TU3JP), KFX (TU3JP)	55	06/2000 → 09/2003		70	12	063533350070	**MAN2005**
1.6	NFT	74	02/2001 → 09/2003		75	12	063341740010	**MAN1163**
1.6 VTS	NFT	72	09/2000 → 09/2003		75	12	063341740010	**MAN1163**
XSARA (N1)								
1.4 i	KFW (TU3JP), KFX (TU3JP)	55	07/1997 → 08/2000		70	12	063533350070	**MAN2005**
1.4 i	KFW (TU3JP), KFX (TU3JP)	55	09/2000 → 03/2005		75	12	063341734010	**MAN1166**
1.4 HDi	8HX (DV4TD)	50	01/2003 → 03/2005		90	12	063377300010	**MAN7300**
1.6 16V	NFU (TU5JP4)	80	09/2000 → 03/2005		90	12	063321734010	**MAN963**
1.8 VTS	6FZ (EW7J4)	85	09/2000 → 10/2004		90	12	063321734010	**MAN963**
XSARA Break (N2)								
1.4 i	KFW (TU3JP), KFX (TU3JP)	55	09/2000 → 08/2005		75	12	063341734010	**MAN1166**
1.4 i	KFW (TU3JP), KFX (TU3JP)	55	04/1998 → 08/2000		70	12	063533350070	**MAN2005**
1.6 16V	NFU (TU5JP4)	80	09/2000 → 08/2005		90	12	063321734010	**MAN963**
1.6 16V	NFU (TU5JP4)	80	09/2000 → 08/2005		75	12	063341734010	**MAN1166**
XSARA Coupe (N0)								
1.4 i	KFW (TU3JP), KFX (TU3JP)	55	03/1998 → 08/2000		70	12	063533350070	**MAN2005**
1.6 16V	NFU (TU5JP4)	80	09/2000 → 03/2005		90	12	063321734010	**MAN963**
1.6 16V	NFU (TU5JP4)	80	09/2000 → 03/2005		75	12	063341734010	**MAN1166**
XSARA PICASSO (N68)								
1.6	NFV (TU5JP)	70	12/1999 →		90	12	063321734010	**MAN963**
1.6	NFZ (TU5JP)	65	12/1999 →		90	12	063321734010	**MAN963**
1.6	NFV (TU5JP)	70	09/2000 →		75	12	063341734010	**MAN1166**
1.6	NFZ (TU5JP)	65	01/2000 →		75	12	063341734010	**MAN1166**
1.6 16V	NFU (TU5JP4)	80	09/2005 →		75	12	063341734010	**MAN1166**
1.8 16V	6FZ (EW7J4), LFY (XU7JP4)	85	02/2000 →		90	12	063321734010	**MAN963**
1.8 16V	6FZ (EW7J4), LFY (XU7JP4)	85	06/2000 →		75	12	063341734010	**MAN1166**
2.0 16V	RFN (EW10J4)	100	01/2003 →		90	12	063321734010	**MAN963**
ZX (N2)								
1,1	H1A, H1B	40	03/1991 → 08/1993		70	12	063533350070	**MAN2005**
1.1	HDZ (TU1M)	44	10/1991 → 03/1994		70	12	063533350070	**MAN2005**
1.4	KDZ (TU3M/Z)	55	08/1992 → 08/1996		70	12	063533350070	**MAN2005**
1.4 i	KDX (TU3M/Z), KDZ (TU3M/Z), KFX (TU3JP)	55	03/1991 → 06/1997		70	12	063533350070	**MAN2005**
ZX Break (N2)								
1.4 i	KDX (TU3M/Z), KDY (TU3M), KFX (TU3JP)	55	10/1993 → 08/1996		70	12	063533350070	**MAN2005**

		kW		i	A	V	MAGNETI MARELLI LONG	MAGNETI MARELLI SHORT
DACIA								
LOGAN (LS_)								
1.4 (LSOA, LSOC, LSOE, LSOG)	K7J 710	55	09/2004 →		105	12	063310506010	**MAN956**
1.6 (LSOB, LSOD, LSOF, LSOH)	K7M 710	64	09/2004 →		105	12	063310506010	**MAN956**
DAEWOO								
ESPERO (KLEJ)								
1.5 16V	A15MF	66	02/1995 → 06/1999		85	12	063532635010	**MAN2635**
1.8	C18LE	66	02/1995 → 09/1999		85	12	063532634010	**MAN2634**
1.8	C18LE	70	02/1995 → 06/1999		85	12	063532634010	**MAN2634**
2.0	C20LE	77	02/1995 → 06/1999		85	12	063532634010	**MAN2634**
EVANDA (KLAL)								
2.0	L88, X 20 SED	96	08/2002 →		95	12	063532631010	**MAN2631**
KALOS (KLAS)								
1.2	B12S1	53	04/2003 →		85	12	063532630010	**MAN2630**
1.4	F14S3	61	09/2002 →		85	12	063532630010	**MAN2630**
1.4 16V	F14D3	69	04/2003 →		85	12	063532630010	**MAN2630**
LANOS (KLAT)								
1.4	A14SMS	55	05/1997 →		85	12	063532636010	**MAN2636**
1.5	A15SMS	63	05/1997 →		85	12	063532636010	**MAN2636**
1.6 16V	A16DMS	78	05/1997 →		85	12	063532636010	**MAN2636**
LANOS Tre volumi (KLAT)								
1.4	A14SMS	55	05/1997 →		85	12	063532636010	**MAN2636**
1.5	A15SMS, Y15L	63	05/1997 →		85	12	063532636010	**MAN2636**
1.6 16V	A16DMS	78	05/1997 →		85	12	063532636010	**MAN2636**
LEGANZA (KLAV)								
2.0 16V	X 20 SED	98	06/1997 → 12/2002		95	12	063532631010	**MAN2631**
2.0 16V	X 20 SED	98	06/1997 → 12/2002		85	12	063532637010	**MAN2637**
MATIZ (KLYA)								
0.8	F8CV	38	09/1998 →		65	12	063532620010	**MAN2620**
1.0		47	10/2004 →		65	12	063532629010	**MAN2629**
NEXIA (KLETN)								
1.5	G15MF	52	02/1995 → 08/1997		85	12	063532635010	**MAN2635**
1.5	G15MF	55	02/1995 → 08/1997		85	12	063532635010	**MAN2635**
1.5 16V	A15MF	66	02/1995 → 08/1997		85	12	063532635010	**MAN2635**
NEXIA Tre volumi (KLETN)								
1.5	G15MF	52	02/1995 → 08/1997		85	12	063532635010	**MAN2635**
1.5	G15MF	55	02/1995 → 08/1997		85	12	063532635010	**MAN2635**
1.5 16V	A15MF	66	02/1995 → 08/1997		85	12	063532635010	**MAN2635**
NUBIRA (KLAJ)								
2.0 16V	X 20 SED, Z20L	98	05/1997 →		85	12	063532637010	**MAN2637**
NUBIRA Tre volumi (KLAJ)								
1.6 16V	A16DMS	76	07/2000 →		85	12	063532633010	**MAN2633**
2.0	C20SED	81	06/1999 → 07/2003		85	12	063532637010	**MAN2637**
2.0 16V	T20SED	93	12/2000 →		85	12	063532637010	**MAN2637**
2.0 16V	X 20 SED	98	05/1997 →		85	12	063532637010	**MAN2637**

		kW		i	A	V	LONG	SHORT
DAEWOO								
NUBIRA Tre volumi (KLAN)								
1.6	F16D3	80	09/2004 →		85	12	063532630010	**MAN2630**
1.8	T18SED	90	07/2003 →		85	12	063532637010	**MAN2637**
NUBIRA Wagon (KLAJ)								
2.0 16V	T20SED	93	12/2000 →		85	12	063532637010	**MAN2637**
2.0 16V	X 20 SED	98	05/1997 →		85	12	063532637010	**MAN2637**
REZZO (KLAU)								
1.6	A16DMS	77	09/2000 →		85	12	063532633010	**MAN2633**
1.8		66	09/2000 →		95	12	063532632010	**MAN2632**
1.8		74	09/2000 →		95	12	063532632010	**MAN2632**
1.8	F18D2	67	09/2000 →		95	12	063532632010	**MAN2632**
1.8	A18DMS	72	09/2000 →		95	12	063532632010	**MAN2632**
1.8	A18DMS	72	09/2000 →		85	12	063532633010	**MAN2633**
1.8		74	09/2000 →		85	12	063532633010	**MAN2633**
1.8		66	09/2000 →		85	12	063532637010	**MAN2637**
2.0		94	09/2000 →		95	12	063532631010	**MAN2631**
2.0	X 20 SED	89	09/2001 →		85	12	063532637010	**MAN2637**
FERRARI								
400 i								
4.8	F 101..	232	05/1979 → 12/1982		55	12	063321011010	**MAN349**
412 i								
4.9	F 101 E..	250	04/1985 → 12/1988		65	12	063321152010	**MAN327**
512 BB								
4.9	F 110 A	237	07/1981 → 12/1982		55	12	063321011010	**MAN349**
4.9	F 102 B..	250	08/1976 → 05/1979		65	12	063321017010	**MAN352**
F40								
3.0	F 120 A	352	02/1988 → 06/1992		65	12	063321017010	**MAN352**
FIAT								
124								
1200	124 A.000	48	02/1973 → 07/1975		55	12	063321011010	**MAN349**
1200 (TA)		44	01/1971 → 10/1973		55	12	063321011010	**MAN349**
1400 Special	124 B2.000	51	01/1971 → 12/1972		55	12	063321011010	**MAN349**
1500 Special	124 B2.000	55	01/1973 → 07/1975		55	12	063321011010	**MAN349**
1500 Special T	124 AC.000	59	01/1971 → 07/1975		55	12	063321011010	**MAN349**
124 Coupe								
1600 (BC 1)		74	11/1971 → 10/1973		55	12	063321011010	**MAN349**
1600 (BC 1)		81	04/1970 → 10/1973		55	12	063321011010	**MAN349**
1600 Sport	132 AC.000	76	08/1972 → 12/1973		55	12	063321011010	**MAN349**
1600 Sport	132 AC.000	80	08/1972 → 12/1973		55	12	063321011010	**MAN349**
124 Spider								
1600 Sport (BS)		82	11/1969 → 08/1973		55	12	063321011010	**MAN349**
1600 Sport (BS1)	132 AC.000	74	11/1969 → 08/1973		55	12	063321011010	**MAN349**
1600 Sport (BS1)	132 AC.000	80	01/1969 → 12/1973		55	12	063321011010	**MAN349**
1600 Sport (CS)	132 AC.000	76	01/1969 → 12/1973		55	12	063321011010	**MAN349**

		kW		i	A	V	LONG	SHORT
FIAT								
124 SW								
1200	124 A.000	48	05/1973 → 03/1975		55	12	063321011010	**MAN349**
1200		44	01/1971 → 05/1973		55	12	063321011010	**MAN349**
125								
1.6 (TA)	125 A.000	66	07/1971 → 12/1972		55	12	063321011010	**MAN349**
1.6 Special (TA)	125 B.000	74	07/1971 → 12/1972		55	12	063321011010	**MAN349**
126								
650	141 A.000	22	01/1983 → 06/1996		55	12	063321112010	**MAN379**
700	126 A2.000, 126 A2.048	19	09/1987 → 06/1996		55	12	063321112010	**MAN379**
700	126 A2.000, 126 A2.048	19	09/1987 → 12/1990		55	12	063321154010	**MAN344**
127								
0.9	100 GL.048	29	01/1975 → 05/1983		55	12	063341454010	**MAN1014**
0.9	100 GL.000	33	06/1973 → 05/1983		55	12	063341454010	**MAN1014**
1.0	127 A.000	37	04/1977 → 12/1986		55	12	063321154010	**MAN344**
1.0 Sport	127 A1.000	51	07/1978 → 02/1982		55	12	063321154010	**MAN344**
1.3 Diesel	127 A5.000	33	04/1981 → 12/1986		55	12	063321155010	**MAN320**
1.3 Sport	127 A3.000	55	12/1981 → 05/1983		55	12	063321155010	**MAN320**
127 Panorama								
1.0	127 A.000	37	11/1978 → 12/1979		55	12	063321154010	**MAN344**
1.3 Diesel	127 A5.000	33	06/1983 → 12/1986		55	12	063321155010	**MAN320**
128								
1.1	128 A.000	40	01/1978 → 12/1984		55	12	063321154010	**MAN344**
1.1	128 A.048	33	01/1978 → 09/1981		55	12	063321154010	**MAN344**
1.3 Sport	128 A1.000	44	01/1978 → 12/1984		55	12	063321154010	**MAN344**
128 Coupe								
1.3 (AC)	128 AC.000	55	01/1978 → 12/1979		55	12	063321154010	**MAN344**
1.3 Berlinetta (AC)	128 AC.000	54	01/1978 → 12/1979		55	12	063321154010	**MAN344**
128 SW								
1.1 (AF)	128 A.000	40	01/1978 → 10/1982		55	12	063321154010	**MAN344**
1.1 (AF)	128 A.048	33	01/1978 → 02/1981		55	12	063321154010	**MAN344**
1.3 (AF1)	128 A1.000	44	01/1978 → 10/1982		55	12	063321154010	**MAN344**
131								
1.3 Mirafiori	131 A6.000	40	10/1974 → 09/1981		55	12	063321011010	**MAN349**
1.3 Mirafiori		48	10/1974 → 12/1982		55	12	063321011010	**MAN349**
1.3 Super Mirafiori	131 B.000	57	03/1978 → 12/1980		55	12	063321011010	**MAN349**
1.4 Mirafiori	131 C.000, 131 C1.000	51	11/1980 → 01/1984	⊛	55	12	063321011010	**MAN349**
1.4 Mirafiori	131 C.000, 131 C1.000	51	11/1980 → 01/1984		55	12	063321044010	**MAN286**
1.4 Mirafiori	131 C.000, 131 C1.000	51	01/1982 → 01/1984	⊛	55	12	063321112010	**MAN379**
1.4 Mirafiori	131 C.000, 131 C1.000	51	01/1982 → 01/1984		65	12	063321152010	**MAN327**
1.4 Mirafiori	131 C.000, 131 C1.000	51	10/1982 → 01/1984	⊛	55	12	063321409010	**MAN909**
1.4 Super Mirafiori	131 C1.000	55	04/1981 → 12/1983	⊛	55	12	063321011010	**MAN349**
1.4 Super Mirafiori	131 C1.000	55	04/1981 → 12/1981	⊛	65	12	063321017010	**MAN352**

		kW		i	A	V	LONG	SHORT
FIAT								
131								
1.4 Super Mirafiori	131 C1.000	55	04/1981 → 12/1983		55	12	063321044010	**MAN286**
1.4 Super Mirafiori	131 C1.000	55	01/1982 → 12/1983	⊛	55	12	063321112010	**MAN379**
1.4 Super Mirafiori	131 C1.000	55	10/1982 → 12/1983	⊛	55	12	063321409010	**MAN909**
1.6	131 C2.000	63	11/1976 → 12/1976	⊛	55	12	063321011010	**MAN349**
1.6	131 C2.000	63	01/1982 → 12/1984	⊛	55	12	063321112010	**MAN379**
1.6	131 C2.000	63	01/1982 → 12/1984		65	12	063321152010	**MAN327**
1.6	131 C2.000	63	10/1982 → 01/1984	⊛	55	12	063321409010	**MAN909**
1.6 (S)	131 A1.000	55	10/1974 → 09/1981		55	12	063321011010	**MAN349**
1.6 (S)	131 A1.000	55	01/1981 → 09/1981	⊛	65	12	063321017010	**MAN352**
1.6 Super	131 C3.000	71	03/1978 → 01/1984		55	12	063321011010	**MAN349**
1.6 Super	131 C3.000	71	01/1981 → 12/1981	⊛	65	12	063321017010	**MAN352**
1.6 Super Mirafiori (A)	131 B1.000	72	03/1979 → 03/1982		55	12	063321011010	**MAN349**
1.6 Super Mirafiori (A)	131 B1.000	72	01/1981 → 12/1981	⊛	65	12	063321017010	**MAN352**
2.0 Abarth Rally	131 B2.000	103	01/1976 → 07/1980		55	12	063321011010	**MAN349**
2.0 D	8144.65	44	01/1982 → 08/1984	◎	65	12	063320049010	**MAN771**
2.0 D	8144.65	44	01/1982 → 08/1984		65	12	063321019010	**MAN274**
2.0 D	8144.65	44	07/1978 → 08/1984		65	12	063321021010	**MAN354**
2.0 D	8144.65	44	07/1978 → 08/1984		55	12	063321041010	**MAN284**
2.0 Racing	131 B2.000	85	06/1978 → 12/1981		55	12	063321011010	**MAN349**
2.0 Super	131 C4.000	83	01/1981 → 12/1984	⊛	55	12	063321011010	**MAN349**
2.0 Super	131 C4.000	83	01/1982 → 12/1984	⊛	55	12	063321112010	**MAN379**
2.0 Super	131 C4.000	83	01/1982 → 12/1984		65	12	063321152010	**MAN327**
2.0 Super	131 C4.000	83	10/1982 → 01/1984	⊛	55	12	063321409010	**MAN909**
2.5 Diesel	8144.61	53	01/1982 → 02/1984	◎	65	12	063320049010	**MAN771**
2.5 Diesel	8144.61	53	01/1982 → 02/1984		65	12	063321019010	**MAN274**
2.5 Diesel	8144.61	53	06/1978 → 02/1984		65	12	063321021010	**MAN354**
2.5 Diesel	8144.61	53	06/1978 → 02/1984		55	12	063321041010	**MAN284**
131 SW/Panorama								
1.3 Mirafiori (AF)		48	03/1975 → 03/1982		55	12	063321011010	**MAN349**
1.3 Mirafiori (AF)	131 A6.000	40	03/1975 → 12/1978		55	12	063321011010	**MAN349**
1.4 Mirafiori	131 C.000, 131 C1.000	51	11/1981 → 01/1984		55	12	063321011010	**MAN349**
1.4 Mirafiori	131 C.000, 131 C1.000	51	11/1981 → 12/1981	⊛	65	12	063321017010	**MAN352**
1.4 Mirafiori	131 C.000, 131 C1.000	51	01/1982 → 01/1984		55	12	063321112010	**MAN379**
1.4 Mirafiori	131 C.000, 131 C1.000	51	01/1982 → 01/1984		65	12	063321152010	**MAN327**
1.4 Mirafiori	131 C.000, 131 C1.000	51	10/1982 → 01/1984	⊛	55	12	063321409010	**MAN909**
1.6	131 C2.000	63	10/1982 → 01/1984		55	12	063321112010	**MAN379**
1.6	131 C2.000	63	01/1982 → 01/1984		65	12	063321152010	**MAN327**
1.6 CL (AF1)	131 A1.000	55	03/1975 → 12/1978		55	12	063321011010	**MAN349**
1.6 Super	131 C3.000	72	12/1979 → 12/1981		55	12	063321011010	**MAN349**
1.6 Super	131 C3.000	72	01/1981 → 12/1981	⊛	65	12	063321017010	**MAN352**

		kW		i	A	V	MAGNETI MARELLI LONG	MAGNETI MARELLI SHORT
FIAT								
131 SW/Panorama								
2.0 D	8144.65	44	01/1982 → 08/1984		65	12	063320049010	**MAN771**
2.0 D	8144.65	44	01/1982 → 08/1984		65	12	063321019010	**MAN274**
2.0 D	8144.65	44	07/1978 → 08/1984		65	12	063321021010	**MAN354**
2.0 D	8144.65	44	07/1978 → 08/1984		55	12	063321041010	**MAN284**
2.0 Super	131 C4.000	83	01/1981 → 12/1984		55	12	063321011010	**MAN349**
2.0 Super	131 C4.000	83	01/1981 → 12/1981		65	12	063321017010	**MAN352**
2.0 Super	131 C4.000	83	01/1982 → 12/1984		55	12	063321112010	**MAN379**
2.0 Super	131 C4.000	83	01/1982 → 12/1984		65	12	063321152010	**MAN327**
2.0 Super	131 C4.000	83	10/1982 → 01/1984		55	12	063321409010	**MAN909**
2.5 Super Diesel (AF)	8144.61	53	01/1982 → 12/1984		65	12	063320049010	**MAN771**
2.5 Super Diesel (AF)	8144.61	53	01/1982 → 12/1984		65	12	063321019010	**MAN274**
2.5 Super Diesel (AF)	8144.61	53	03/1979 → 12/1984		65	12	063321021010	**MAN354**
2.5 Super Diesel (AF)	8144.61	53	03/1979 → 12/1984		55	12	063321041010	**MAN284**
132								
1.6	132 BB OA O	72	04/1972 → 01/1976		55	12	063321011010	**MAN349**
1.6		65	02/1978 → 05/1981		55	12	063321409010	**MAN909**
1.6	132 C6.000	66	02/1978 → 05/1981		55	12	063321409010	**MAN909**
1.6	132 C.000	72	02/1978 → 05/1981		55	12	063321409010	**MAN909**
1.7 GLS (A1)	132 B1.000	82	11/1975 → 12/1976		55	12	063321011010	**MAN349**
1.7 GLS (A1)	132 B1.000	79	04/1974 → 12/1975		55	12	063321011010	**MAN349**
1.7 Special (A1)	132 B1.000	77	04/1972 → 01/1974		55	12	063321011010	**MAN349**
2.0	132 C2.000	82	02/1978 → 05/1981		55	12	063321409010	**MAN909**
2.0 D	8144.65	44	07/1978 → 07/1982		65	12	063321021010	**MAN354**
2.0 D	8144.65	44	07/1978 → 07/1982		55	12	063321041010	**MAN284**
2.0 i.e.	132 C3.000	90	01/1980 → 12/1982		55	12	063321011010	**MAN349**
2.5 D	8144.61	53	07/1978 → 07/1982		65	12	063321021010	**MAN354**
2.5 D	8144.61	53	07/1978 → 07/1982		55	12	063321041010	**MAN284**
238-SERIE								
1.4	131 AZ 000, 131 BZ 0C0, 131 FZ	38	06/1976 → 12/1977		55	12	063321011010	**MAN349**
1.4		34	01/1969 → 06/1976		55	12	063321011010	**MAN349**
242-SERIE Autobus								
1.6	124 B3.000	46	01/1979 → 07/1982		55	12	063321011010	**MAN349**
1.9	132 AZ2.000	51	01/1979 → 07/1982		55	12	063321011010	**MAN349**
242-SERIE Furgonato								
1.6	124 B3.000	46	01/1979 → 07/1982		55	12	063321011010	**MAN349**
1.9	132 AZ2.000	51	01/1979 → 07/1982		55	12	063321011010	**MAN349**
2.2 D		46	01/1979 → 08/1980		55	12	063321011010	**MAN349**
2.5 D		52	08/1980 → 07/1982		55	12	063321011010	**MAN349**
500								
1.2	169 A4.000	51	10/2007 →		105	12	063377007010	**MAN7007**
1.2	169 A4.000	51	10/2007 →		70	12	063377011010	**MAN7011**
1.2	169 A4.000	51	10/2007 →		120	12	063377027010	**MAN7027**

		kW			A	V	LONG	SHORT
FIAT								
500								
1.2	169 A4.000	51	10/2007 →		90	12	063377030010	**MAN7030**
1.2	169 A4.000	51	10/2007 →		105	12	063377031010	**MAN7031**
1.3 D Multijet	169 A1.000	55	12/2007 →		90	12	063358061010	**MAN1097**
1.3 D Multijet	169 A1.000	55	10/2007 →		75	12	063358062010	**MAN1098**
1.3 D Multijet	169 A1.000	55	10/2007 →		105	12	063377494010	**MAN7494**
1.3 D Multijet	199 B1.000	70	12/2009 →		105	12	063377025010	**MAN7025**
1.3 D Multijet	199 B1.000	70	12/2009 →		120	12	063377028010	**MAN7028**
1.3 D Multijet	199 B1.000	70	12/2009 →		90	12	063377030010	**MAN7030**
1.4	169 A3.000	74	10/2007 →		105	12	063377007010	**MAN7007**
1.4	169 A3.000	74	10/2007 →		70	12	063377011010	**MAN7011**
1.4	169 A3.000	74	10/2007 →		120	12	063377027010	**MAN7027**
1.4	169 A3.000	74	10/2007 →		90	12	063377030010	**MAN7030**
1.4	169 A3.000	74	10/2007 →		105	12	063377031010	**MAN7031**
1.4 Abarth	312 A1.000	99	08/2008 →		120	12	063377027010	**MAN7027**
1.4 Abarth	312 A1.000	118	08/2008 →		120	12	063377027010	**MAN7027**
500 C								
1.2	169 A4.000	51	09/2009 →		120	12	063377027010	**MAN7027**
1.2	169 A4.000	51	09/2009 →		90	12	063377030010	**MAN7030**
1.2	169 A4.000	51	09/2009 →		105	12	063377031010	**MAN7031**
1.3 D Multijet	169 A1.000	55	09/2009 →		90	12	063358061010	**MAN1097**
1.3 D Multijet	169 A1.000	55	09/2009 →		75	12	063358062010	**MAN1098**
1.3 D Multijet	169 A1.000	55	09/2009 →		105	12	063377494010	**MAN7494**
1.3 D Multijet	199 B1.000	70	09/2009 →		105	12	063377025010	**MAN7025**
1.3 D Multijet	199 B1.000	70	09/2009 →		120	12	063377028010	**MAN7028**
1.3 D Multijet	199 B1.000	70	09/2009 →		90	12	063377030010	**MAN7030**
1.4	169 A3.000	74	09/2009 →		120	12	063377027010	**MAN7027**
1.4	169 A3.000	74	09/2009 →		90	12	063377030010	**MAN7030**
1.4	169 A3.000	74	09/2009 →		105	12	063377031010	**MAN7031**
ARGENTA (132A)								
1600	132 D.000	72	10/1982 → 05/1983		55	12	063321011010	**MAN349**
1600	132 D.000	72	06/1981 → 12/1982		65	12	063321017010	**MAN352**
1600	132 D.000	72	04/1981 → 12/1983		55	12	063321112010	**MAN379**
1600	132 D.000	72	04/1981 → 12/1983		65	12	063321152010	**MAN327**
1600 i.e		66	06/1981 → 11/1985		55	12	063321112010	**MAN379**
1600 i.e		66	04/1981 → 12/1983		65	12	063321152010	**MAN327**
2000	132 C2.000, 132 D1.000	83	01/1983 → 12/1985		55	12	063321011010	**MAN349**
2000	132 C2.000, 132 D1.000	83	06/1981 → 05/1983		65	12	063321152010	**MAN327**
2000 i.e.	132 C3.000	90	01/1983 → 05/1983		55	12	063321112010	**MAN379**
2000 i.e.	132 C3.000	90	01/1983 → 05/1983		65	12	063321152010	**MAN327**
2000 Volumex		99	06/1984 → 07/1985		55	12	063321011010	**MAN349**
2500 Diesel	8144.61	53	06/1981 → 12/1983		65	12	063320049010	**MAN771**

		kW		i	A	V	LONG	SHORT
FIAT								
ARGENTA (132A)								
2500 Diesel	8144.61	53	06/1981 → 12/1983		65	12	063321019010	**MAN274**
2500 Diesel	8144.61	53	06/1981 → 11/1985		65	12	063321021010	**MAN354**
2500 Diesel	8144.61	53	06/1981 → 11/1985		55	12	063321041010	**MAN284**
2500 Turbodiesel	8144.61.500.81	66	07/1983 → 08/1985		65	12	063320049010	**MAN771**
2500 Turbodiesel	8144.61.500.81	66	07/1983 → 08/1985		65	12	063321019010	**MAN274**
2500 Turbodiesel	8144.61.500.81	66	07/1983 → 08/1985		55	12	063321041010	**MAN284**
BARCHETTA (183)								
1.8 16V	183 A1.000, 188 A6.000	96	04/1995 →		90	12	063321729010	**MAN1107**
1.8 16V	183 A1.000, 188 A6.000	96	04/1995 →		85	12	063321802010	**MAN1102**
1.8 16V	183 A1.000, 188 A6.000	96	04/1995 →		100	12	063321803010	**MAN1100**
1.8 16V	183 A1.000, 188 A6.000	96	01/2001 →		65	12	063321839010	**MAN1119**
1.8 16V	183 A1.000, 188 A6.000	96	04/1995 →		120	12	063321859010	**MAN1117**
BRAVA (182)								
1.2 16V 80	188 A5.000	59	10/2000 → 10/2001		65	12	063321605010	**MAN939**
1.2 16V 80	182 B2.000	60	12/1998 → 10/2000		65	12	063321605010	**MAN939**
1.2 16V 80	188 A5.000	59	10/2000 → 10/2001		90	12	063321715010	**MAN1039**
1.2 16V 80	182 B2.000	60	12/1998 → 10/2000		90	12	063321863010	**MAN1156**
1.2 16V 80	188 A5.000	59	10/2000 → 10/2000		90	12	063321863010	**MAN1156**
1.4 (182.BG)	182 A5.000	55	10/1995 → 10/2001		90	12	063321729010	**MAN1107**
1.4 (182.BG)	182 A5.000	55	10/1995 → 10/2001		85	12	063321810010	**MAN1147**
1.4 (182.BG)	182 A5.000	55	10/1995 → 10/2001		75	12	063321813010	**MAN1151**
1.4 12 V (182.BA)	182 A3.000	59	10/1995 → 10/2001		90	12	063321729010	**MAN1107**
1.4 12 V (182.BA)	182 A3.000	59	10/1995 → 10/2001		85	12	063321810010	**MAN1147**
1.4 12 V (182.BA)	182 A3.000	59	10/1995 → 10/2001		75	12	063321813010	**MAN1151**
1.4 12 V (182.BA)	182 A3.000	59	10/1995 → 08/1998		65	12	063321839010	**MAN1119**
1.6 16V (182.BB)	182 A4.000	76	02/1996 → 10/2001		85	12	063321328010	**MAN784**
1.6 16V (182.BB)	182 A4.000	76	01/1998 → 10/2001		75	12	063321607010	**MAN800**
1.6 16V (182.BB)	182 A4.000	76	02/1996 → 10/2001		90	12	063533250580	**MAN2002**
1.6 16V (182.BB)	182 A4.000	76	02/1996 → 10/2001		110	12	063533250590	**MAN2040**
1.6 16V (182.BB)	182 A4.000	76	11/1998 → 09/2001		105	12	063534150120	**MAN2042**
1.6 16V (182.BH)	182 A6.000	66	10/1995 → 10/2001		85	12	063321328010	**MAN784**
1.6 16V (182.BH)	182 A6.000	66	10/1995 → 10/2001		75	12	063321606010	**MAN799**
1.6 16V (182.BH)	182 A6.000	66	10/1995 → 10/2001		75	12	063321607010	**MAN800**
1.6 16V (182.BH)	182 A6.000	66	10/1995 → 10/2001		90	12	063533250580	**MAN2002**
1.6 16V (182.BU)	182 B6.000	76	01/1999 → 12/2001		105	12	063534150120	**MAN2042**
1.8 GT 16V (182.BC)	182 A2.000	83	01/1998 → 10/2001		90	12	063321729010	**MAN1107**
1.8 GT 16V (182.BC)	182 A2.000	83	10/1995 → 10/2001	→ 429294	100	12	063321800010	**MAN1104**
1.8 GT 16V (182.BC)	182 A2.000	83	08/1999 → 08/2001		85	12	063321802010	**MAN1102**
1.8 GT 16V (182.BC)	182 A2.000	83	10/1995 → 10/2001		100	12	063321803010	**MAN1100**
1.8 GT 16V (182.BC)	182 A2.000	83	10/1995 → 10/2001		85	12	063321810010	**MAN1147**
1.8 GT 16V (182.BC)	182 A2.000	83	10/1995 → 08/2001		75	12	063321813010	**MAN1151**

		kW			A	V	LONG	SHORT
FIAT								
BRAVA (182)								
1.8 GT 16V (182.BC)	182 A2.000	83	08/1999 → 10/1999		120	12	063321859010	**MAN1117**
1.8 GT 16V (182.BC)	182 A2.000	83	10/1995 → 08/2001	⊛	140	12	063321862010	**MAN1162**
1.9 D	160 A7.000	48	10/1995 → 10/2001		65	12	063321615010	**MAN807**
1.9 D	160 A7.000	48	10/1995 → 10/2001		85	12	063321618010	**MAN810**
1.9 JTD	182 B9.000	74	09/2000 → 10/2001	⊛	100	12	063321800010	**MAN1104**
1.9 JTD	182 B9.000	74	09/2000 → 10/2001	⊛	140	12	063321862010	**MAN1162**
1.9 JTD 105	182 B4.000	77	12/1998 → 08/2000	⊛	90	12	063321729010	**MAN1107**
1.9 JTD 105	182 B4.000	77	12/1998 → 08/2000	⊛	85	12	063321802010	**MAN1102**
1.9 JTD 105	182 B4.000	77	12/1998 → 08/2000		105	12	063321826010	**MAN1127**
1.9 JTD 105	182 B4.000	77	01/2001 → 10/2001		120	12	063321859010	**MAN1117**
1.9 TD 75 S (182.BF)	182 A8.000	55	03/1996 → 10/2001		90	12	063321729010	**MAN1107**
1.9 TD 75 S (182.BF)	182 A8.000	55	11/1998 → 10/1999		100	12	063321803010	**MAN1100**
1.9 TD 75 S (182.BF)	182 A8.000	55	09/1996 → 08/2001	⊛	140	12	063321862010	**MAN1162**
1.9 TD 100 S (182.BF)	182 A7.000	74	03/1996 → 10/2001		90	12	063321729010	**MAN1107**
1.9 TD 100 S (182.BF)	182 A7.000	74	11/1998 → 10/1999		100	12	063321803010	**MAN1100**
1.9 TD 100 S (182.BF)	182 A7.000	74	09/1996 → 10/2001	⊛	140	12	063321862010	**MAN1162**
2.0	182 B7.000	113	11/1998 → 08/2000	⊛	85	12	063321402010	**MAN791**
BRAVO I (182)								
1.2 16V 80	182 B2.000	60	12/1998 → 10/2000		65	12	063321605010	**MAN939**
1.2 16V 80	188 A5.000	59	10/2000 → 10/2001		65	12	063321605010	**MAN939**
1.2 16V 80	188 A5.000	59	10/2000 → 10/2001		90	12	063321715010	**MAN1039**
1.2 16V 80	188 A5.000	59	10/2000 → 10/2000		90	12	063321863010	**MAN1156**
1.2 16V 80	182 B2.000	60	12/1998 → 10/2000		90	12	063321863010	**MAN1156**
1.4 (182.AA)	182 A3.000	59	10/1995 → 10/2001		90	12	063321729010	**MAN1107**
1.4 (182.AA)	182 A3.000	59	10/1995 → 10/2001		85	12	063321810010	**MAN1147**
1.4 (182.AA)	182 A3.000	59	10/1995 → 10/2001		75	12	063321813010	**MAN1151**
1.4 (182.AA)	182 A3.000	59	10/1995 → 10/2001		65	12	063321839010	**MAN1119**
1.4 (182.AG)	182 A5.000	55	10/1995 → 10/2001		90	12	063321729010	**MAN1107**
1.4 (182.AG)	182 A5.000	55	10/1995 → 10/2001		85	12	063321810010	**MAN1147**
1.4 (182.AG)	182 A5.000	55	10/1995 → 10/2001		75	12	063321813010	**MAN1151**
1.4 (182.AG)	182 A5.000	55	10/1995 → 10/2001		65	12	063321839010	**MAN1119**
1.6 16V (182.AB)	182 A4.000	76	03/1996 → 10/2001		85	12	063321328010	**MAN784**
1.6 16V (182.AB)	182 A4.000	76	03/1996 → 09/2001	⊛	75	12	063321606010	**MAN799**
1.6 16V (182.AB)	182 A4.000	76	01/1998 → 10/2001	⊛	75	12	063321607010	**MAN800**
1.6 16V (182.AB)	182 A4.000	76	03/1996 → 10/2001		90	12	063533250580	**MAN2002**
1.6 16V (182.AH)	182 A6.000	66	10/1995 → 04/1998		85	12	063321328010	**MAN784**
1.6 16V (182.AH)	182 A6.000	66	10/1995 → 10/2001	⊛	75	12	063321606010	**MAN799**
1.6 16V (182.AH)	182 A6.000	66	10/1995 → 10/2001	→ 124028	75	12	063321607010	**MAN800**
1.6 16V (182.AH)	182 A6.000	66	10/1995 → 10/2001		90	12	063533250580	**MAN2002**
1.8 GT (182.AC)	182 A2.000	83	01/1998 → 10/2001		90	12	063321729010	**MAN1107**
1.8 GT (182.AC)	182 A2.000	83	10/1995 → 12/1998		100	12	063321800010	**MAN1104**
1.8 GT (182.AC)	182 A2.000	83	11/1996 → 08/2001	⊛	85	12	063321802010	**MAN1102**
1.8 GT (182.AC)	182 A2.000	83	10/1995 → 10/2001		100	12	063321803010	**MAN1100**

		kW		i	A	V	LONG	SHORT
FIAT								
BRAVO I (182)								
1.8 GT (182.AC)	182 A2.000	83	10/1995 → 10/2001		85	12	063321810010	**MAN1147**
1.8 GT (182.AC)	182 A2.000	83	11/1996 → 08/2001	⊛	75	12	063321813010	**MAN1151**
1.8 GT (182.AC)	182 A2.000	83	10/1995 → 10/2001		120	12	063321859010	**MAN1117**
1.8 GT (182.AC)	182 A2.000	83	11/1996 → 08/2001		140	12	063321862010	**MAN1162**
1.9 D	160 A7.000	48	10/1995 → 10/1998	⊛	65	12	063321615010	**MAN807**
1.9 D	160 A7.000	48	10/1995 → 10/2001		85	12	063321618010	**MAN810**
1.9 JTD	182 B9.000	74	09/2000 → 10/2001	⊛	100	12	063321800010	**MAN1104**
1.9 JTD	182 B9.000	74	12/2000 → 10/2001	⊛	105	12	063321826010	**MAN1127**
1.9 JTD	182 B9.000	74	09/2000 → 10/2001	⊛	140	12	063321862010	**MAN1162**
1.9 JTD 105	182 B4.000	77	12/1998 → 08/2000	⊛	90	12	063321729010	**MAN1107**
1.9 JTD 105	182 B4.000	77	12/1998 → 10/2001	⊛	85	12	063321802010	**MAN1102**
1.9 JTD 105	182 B4.000	77	01/2001 → 10/2001		105	12	063321826010	**MAN1127**
1.9 JTD 105	182 B4.000	77	12/1998 → 10/2001		120	12	063321859010	**MAN1117**
1.9 TD 75 S (182.AF)	182 A8.000	55	03/1996 → 10/2001		90	12	063321729010	**MAN1107**
1.9 TD 75 S (182.AF)	182 A8.000	55	11/1998 → 10/1999		100	12	063321803010	**MAN1100**
1.9 TD 75 S (182.AF)	182 A8.000	55	09/1996 → 08/2001	⊛	140	12	063321862010	**MAN1162**
1.9 TD 100 S (182.AF)	182 A7.000	74	03/1996 → 10/2001		90	12	063321729010	**MAN1107**
1.9 TD 100 S (182.AF)	182 A7.000	74	11/1998 → 10/1999		100	12	063321803010	**MAN1100**
1.9 TD 100 S (182.AF)	182 A7.000	74	12/2000 → 10/2001	⊛	105	12	063321826010	**MAN1127**
1.9 TD 100 S (182.AF)	182 A7.000	74	09/1996 → 10/2001	⊛	140	12	063321862010	**MAN1162**
2.0 HGT 20V (182.AD)	182 A1.000	108	10/1995 → 07/1998	⊛	85	12	063321402010	**MAN791**
2.0 HGT 20V (182AQ)	182 B7.000	113	07/1998 → 10/2001	⊛	85	12	063321402010	**MAN791**
BRAVO II (198)								
1.4	192 B2.000	66	04/2007 →		100	12	063377017010	**MAN7017**
1.4	192 B2.000	66	04/2007 →		120	12	063377018010	**MAN7018**
1.4	192 B2.000	66	04/2007 →		105	12	063377031010	**MAN7031**
1.4 T-Jet	198 A1.000	110	09/2007 →		100	12	063377017010	**MAN7017**
1.4 T-Jet	198 A1.000	110	09/2007 →		120	12	063377018010	**MAN7018**
1.4 T-Jet	198 A4.000	88	09/2007 →		100	12	063377017010	**MAN7017**
1.4 T-Jet	198 A4.000	88	09/2007 →		120	12	063377018010	**MAN7018**
1.4 T-Jet	198 A4.000	88	09/2007 →		105	12	063377031010	**MAN7031**
1.4 T-Jet	198 A4.000	88	09/2007 →	⊛	120	12	063377426010	**MAN7426**
1.6 D Multijet	198 A2.000	88	03/2008 →		140	12	063377005010	**MAN7005**
1.6 D Multijet	198 A2.000	88	03/2008 →		100	12	063377017010	**MAN7017**
1.6 D Multijet	198 A2.000	88	03/2008 →		120	12	063377018010	**MAN7018**
1.6 D Multijet	198 A3.000	77	03/2008 →		140	12	063377005010	**MAN7005**
1.6 D Multijet	198 A3.000	77	03/2008 →		100	12	063377017010	**MAN7017**
1.6 D Multijet	198 A3.000	77	03/2008 →		120	12	063377018010	**MAN7018**
1.9 D Multijet	192 A8.000	88	04/2007 →		90	12	063377016010	**MAN7016**
1.9 D Multijet	192 A8.000	88	04/2007 →		100	12	063377017010	**MAN7017**
1.9 D Multijet	192 A8.000	88	04/2007 →		120	12	063377018010	**MAN7018**
1.9 D Multijet	192 B5.000	66	04/2007 → 12/2008		90	12	063377016010	**MAN7016**
1.9 D Multijet	192 B5.000	66	04/2007 → 12/2008		100	12	063377017010	**MAN7017**
1.9 D Multijet	937 A5.000	110	04/2007 →		100	12	063377017010	**MAN7017**

		kW			A	V	LONG	SHORT
FIAT								
BRAVO II (198)								
1.9 D Multijet	937 A5.000	110	04/2007 →		120	12	063377018010	**MAN7018**
2.0 D Multijet	198 A5.000, 844 A2.000	121	09/2008 →		100	12	063377017010	**MAN7017**
CAMPAGNOLA								
2.0	6132 AZ 2.000	59	06/1974 → 10/1989		30	24	063320025010	**MAN261**
2.0	6132 AZ 2.000	59	06/1974 → 10/1989		55	12	063321011010	**MAN349**
2.0	6132 AZ 2.000	59	10/1982 → 10/1986		55	12	063321112010	**MAN379**
2.4 D	8144.61.200	53	06/1974 → 10/1989		30	24	063320025010	**MAN261**
2.4 D	8144.61.200	53	06/1974 → 10/1989		55	12	063321011010	**MAN349**
2.4 D	8144.61.200	53	06/1979 → 10/1986		65	12	063321021010	**MAN354**
2.4 D	8144.61.200	53	06/1979 → 10/1986		55	12	063321041010	**MAN284**
CINQUECENTO (170)								
0.9 (170AB)	170 A1.000	30	07/1991 → 12/1993	⊛	55	12	063321165010	**MAN382**
0.9 i.e. (170AC)	170 A1.046	30	07/1991 → 12/1993	⊛	55	12	063321165010	**MAN382**
0.9 i.e. S (170AF, 170CF)	1170 A1.000, 1170 A1.046	29	07/1991 → 01/1998	⊛	55	12	063321165010	**MAN382**
1.1 Sporting (170AH)	176 B2.000	40	10/1994 → 01/1998	⊛	65	12	063321173010	**MAN331**
COUPE (FA/175)								
1.8 16V	183 A1.000	96	03/1996 → 08/2000		90	12	063321729010	**MAN1107**
1.8 16V	183 A1.000	96	03/1996 → 08/2000	⊛	100	12	063321800010	**MAN1104**
1.8 16V	183 A1.000	96	01/1997 → 08/2000		85	12	063321802010	**MAN1102**
1.8 16V	183 A1.000	96	03/1996 → 08/2000		85	12	063321810010	**MAN1147**
1.8 16V	183 A1.000	96	03/1996 → 08/2000		75	12	063321813010	**MAN1151**
1.8 16V	183 A1.000	96	01/1997 → 08/2000		120	12	063321859010	**MAN1117**
1.8 16V	183 A1.000	96	03/1996 → 08/2000	⊛	140	12	063321862010	**MAN1162**
2.0 16V	836 A3.000	102	01/1994 → 08/1996		65	12	063321017010	**MAN352**
2.0 16V	836 A3.000	102	01/1994 → 08/1996	⊛	100	12	063321395010	**MAN782**
2.0 16V Turbo	175 A1.000	140	01/1994 → 08/1996		65	12	063321017010	**MAN352**
2.0 16V Turbo	175 A1.000	140	01/1994 → 08/1996	⊛	100	12	063321395010	**MAN782**
2.0 20V	182 A1.000	108	08/1996 → 04/1998	⊛	85	12	063321402010	**MAN791**
2.0 20V	182 B3.000	113	04/1998 → 08/2000	⊛	85	12	063321402010	**MAN791**
2.0 20V Turbo	175 A3.000	162	08/1996 → 08/2000	⊛	85	12	063321402010	**MAN791**
CROMA (154)								
1600	154 A.048	61	12/1985 → 12/1987		55	12	063321011010	**MAN349**
1600	154 A.048	61	12/1985 → 12/1990		65	12	063321152010	**MAN327**
1600	154 A.048	61	12/1985 → 12/1990		100	12	063321395010	**MAN782**
1900 Turbo D i.d.	154 D1.000	69	11/1992 → 12/1996		65	12	063321017010	**MAN352**
1900 Turbo D i.d.	154 D1.000	69	11/1992 → 12/1996	⊛	55	12	063321191010	**MAN330**
1900 Turbo D i.d. (154.LL, 154.PL)	154 C6.000	66	05/1989 → 10/1992		65	12	063321017010	**MAN352**
1900 Turbo D i.d. (154.LL, 154.PL)	154 C6.000	66	07/1990 → 10/1992	⊛	55	12	063321191010	**MAN330**
2000 16V	154 E1.000	101	11/1992 → 08/1996		100	12	063321395010	**MAN782**
2000 CHT		74	03/1991 → 09/1992		65	12	063321152010	**MAN327**
2000 CHT		74	01/1991 → 09/1992	⊛	100	12	063321395010	**MAN782**
2000 CHT (154.AC)	154 A1.000	66	12/1985 → 12/1987		55	12	063321011010	**MAN349**

		kW		i	A	V	MAGNETI MARELLI LONG	MAGNETI MARELLI SHORT
FIAT								
CROMA (154)								
2000 CHT (154.AC)	154 A1.000	66	12/1985 → 02/1989		65	12	063321017010	**MAN352**
2000 CHT (154.AC)	154 A1.000	66	12/1985 → 02/1989		100	12	063321395010	**MAN782**
2000 i.e. (154.AD)	154 C3.000, 834 B.000	88	03/1987 → 12/1990		65	12	063321017010	**MAN352**
2000 i.e. (154.AD)	154 C3.000, 834 B.000	88	01/1990 → 09/1992		65	12	063321087010	**MAN370**
2000 i.e. (154.AD)	154 C3.000, 834 B.000	88	03/1987 → 12/1990	⊛	100	12	063321395010	**MAN782**
2000 i.e. (154.AM)	834 B.048	83	03/1986 → 09/1990		65	12	063321152010	**MAN327**
2000 i.e. (154.AM)	834 B.048	83	03/1986 → 09/1990	⊛	100	12	063321395010	**MAN782**
2000 i.e. (154.AM, 154.LM)	154 C3.046, 834 B.146	85	01/1990 → 08/1996		65	12	063321087010	**MAN370**
2000 i.e. (154.AM, 154.LM)	154 C3.046, 834 B.146	85	10/1987 → 08/1996		65	12	063321152010	**MAN327**
2000 i.e. (154.AM, 154.LM)	154 C3.046, 834 B.146	85	01/1990 → 08/1996		100	12	063321395010	**MAN782**
2000 i.e. Turbo	834 C.146	111	11/1986 → 11/1988		65	12	063321152010	**MAN327**
2000 i.e. Turbo	834 C.146	111	11/1986 → 11/1988	⊛	100	12	063321395010	**MAN782**
2000 i.e. Turbo (154.AM)	154 A2.000	114	12/1985 → 06/1990		65	12	063321152010	**MAN327**
2000 i.e. Turbo (154.AM)	154 A2.000	114	12/1985 → 06/1990	⊛	100	12	063321395010	**MAN782**
2000 i.e. Turbo (154.AM, 154.LM)	154 C4.046, 834 C.146	110	01/1991 → 08/1996		65	12	063321087010	**MAN370**
2000 i.e. Turbo (154.AM, 154.LM)	154 C4.046, 834 C.146	110	12/1992 → 08/1996		100	12	063321395010	**MAN782**
2500 D	8144.67	55	12/1985 → 12/1989		65	12	063321019010	**MAN274**
2500 TD (154.AE)	8144.91.2000	74	12/1985 → 08/1989		65	12	063321019010	**MAN274**
2500 TD (154.LL, 154.PL)	8144.97, 8144.97 Y, 8144.97.2400	85	05/1989 → 12/1992		65	12	063321019010	**MAN274**
2500 TD (154.LL, 154.PL)	8144.97, 8144.97 Y, 8144.97.2400	85	05/1989 → 12/1990	⊛	100	12	063321395010	**MAN782**
2500 TDE	8144.97 S	77	12/1991 → 12/1992		65	12	063321019010	**MAN274**
CROMA (194)								
1.9 D Multijet	939 A1.000	88	06/2005 →		140	12	063377005010	**MAN7005**
1.9 D Multijet	939 A1.000	88	06/2005 →		100	12	063377017010	**MAN7017**
1.9 D Multijet	939 A1.000	88	06/2005 →		120	12	063377018010	**MAN7018**
1.9 D Multijet	939 A2.000	110	06/2005 →		140	12	063377005010	**MAN7005**
1.9 D Multijet	939 A2.000	110	06/2005 →		100	12	063377017010	**MAN7017**
1.9 D Multijet	939 A2.000	110	06/2005 →		120	12	063377018010	**MAN7018**
1.9 D Multijet	939 A7.000	85	06/2005 →		100	12	063377017010	**MAN7017**
1.9 D Multijet	939 A7.000	85	06/2005 →		120	12	063377018010	**MAN7018**
2.4 D Multijet	939 A3.000	147	06/2005 →		150	12	063377015010	**MAN7015**
DOBLO (119)								
1.2 (223AXA1A)	223 A5.000	48	03/2001 →	⊛	65	12	063321600010	**MAN640**
1.2 (223AXA1A)	223 A5.000	48	03/2001 →	Turkey Market	90	12	063321715010	**MAN1039**
1.2 (223AXA1A)	223 A5.000	48	03/2001 →		65	12	063321747010	**MAN1041**
1.2 (223AXA1A)	223 A5.000	48	03/2001 →	North Europe Market	90	12	063321863010	**MAN1156**
1.2 (223AXA1A)	223 A5.000	48	03/2001 →		75	12	063321872010	**MAN1154**
1.2 (223AXA1A)	223 A5.000	48	03/2001 →		70	12	063377001010	**MAN7001**
1.3 D Multijet	223 A9.000	62	10/2005 → 12/2010	⊛	75	12	063358062010	**MAN1098**

		kW		i	A	V	LONG	SHORT
FIAT								
DOBLO (119)								
1.3 D Multijet	223 A9.000	62	10/2005 →	⊛	90	12	063377022010	**MAN7022**
1.3 D Multijet	223 A9.000	62	10/2005 →	⊛	105	12	063377023010	**MAN7023**
1.3 D Multijet	223 A9.000	62	10/2005 →	⊛	70	12	063377024010	**MAN7024**
1.3 JTD	199 A2.000	55	10/2005 → 12/2010	⊛	75	12	063358062010	**MAN1098**
1.3 JTD	199 A2.000	55	05/2005 →	⊛	90	12	063377022010	**MAN7022**
1.3 JTD	199 A2.000	55	05/2005 →	⊛	105	12	063377023010	**MAN7023**
1.3 JTD	199 A2.000	55	05/2005 →		120	12	063377028010	**MAN7028**
1.4	350 A1.000	57	10/2005 →	⊛	90	12	063377030010	**MAN7030**
1.6	182 B6.000	68	01/2003 → 09/2005	⊛	110	12	063533250590	**MAN2040**
1.6 16V (223AXD1A)	182 B6.000	76	10/2001 →		90	12	063533250580	**MAN2002**
1.6 16V (223AXD1A)	182 B6.000	76	10/2001 → 01/2004	⊛	110	12	063533250590	**MAN2040**
1.6 16V (223AXD1A)	182 B6.000	76	10/2001 → 09/2005	⊛	105	12	063534150120	**MAN2042**
1.6 Natural Power	182 B6.000	76	09/2002 →		90	12	063533250580	**MAN2002**
1.6 Natural Power	182 B6.000	76	01/2003 →	⊛	110	12	063533250590	**MAN2040**
1.9 D (223AXB1A)	223 A6.000	46	03/2001 →		90	12	063321729010	**MAN1107**
1.9 D (223AXB1A)	223 A6.000	46	03/2001 →	⊛	105	12	063321826010	**MAN1127**
1.9 D (223AXB1A)	223 A6.000	46	03/2001 →	⊛	65	12	063321833010	**MAN1128**
1.9 D (223AXB1A)	223 A6.000	46	03/2001 →		120	12	063321859010	**MAN1117**
1.9 D Multijet	186 A9.000	88	10/2005 →		90	12	063321729010	**MAN1107**
1.9 D Multijet	186 A9.000	88	01/2006 →		105	12	063321826010	**MAN1127**
1.9 JTD	223 A7.000, 223 B1.000	77	07/2003 →	◎	90	12	063321729010	**MAN1107**
1.9 JTD	223 A7.000, 223 B1.000	77	07/2003 → 12/2010	◎	90	12	063321819010	**MAN1110**
1.9 JTD	223 A7.000, 223 B1.000	77	09/2005 →		105	12	063321826010	**MAN1127**
1.9 JTD (223AXE1A)	182 B9.000, 223 B2.000	74	10/2001 →	◎	90	12	063321729010	**MAN1107**
1.9 JTD (223AXE1A)	182 B9.000, 223 B2.000	74	10/2001 → 01/2004	◎	90	12	063321819010	**MAN1110**
1.9 JTD (223AXE1A)	182 B9.000, 223 B2.000	74	10/2001 →		105	12	063321826010	**MAN1127**
DOBLO (152)								
1.3 D Multijet	199 A3.000, 263 A2.000	66	02/2010 →	⊛	90	12	063377022010	**MAN7022**
1.3 D Multijet	199 A3.000, 263 A2.000	66	02/2010 →	⊛	105	12	063377023010	**MAN7023**
1.3 D Multijet	199 A3.000, 263 A2.000	66	02/2010 →	⊛	70	12	063377024010	**MAN7024**
1.3 D Multijet	199 A3.000, 263 A2.000	66	02/2010 →	⊛	105	12	063377025010	**MAN7025**
1.3 D Multijet	199 A3.000, 263 A2.000	66	02/2010 →		120	12	063377028010	**MAN7028**
1.4	843 A1.000	70	02/2010 →	⊛	120	12	063377027010	**MAN7027**
1.4	843 A1.000	70	02/2010 →	⊛	90	12	063377030010	**MAN7030**
1.4	843 A1.000	70	02/2010 →		105	12	063377031010	**MAN7031**
DOBLO Cargo (223)								
1.2 (223ZXA1A)	223 A5.000	48	03/2001 →	⊛	65	12	063321600010	**MAN640**
1.2 (223ZXA1A)	223 A5.000	48	03/2001 → 09/2005	⊛	75	12	063321604010	**MAN798**
1.2 (223ZXA1A)	223 A5.000	48	03/2001 →	Turkey Market	90	12	063321715010	**MAN1039**

		kW		i	A	V	MAGNETI MARELLI LONG	MAGNETI MARELLI SHORT
FIAT								
DOBLO Cargo (223)								
1.2 (223ZXA1A)	223 A5.000	48	01/2004 →		65	12	063321747010	**MAN1041**
1.2 (223ZXA1A)	223 A5.000	48	03/2001 →	North Europe Market	90	12	063321863010	**MAN1156**
1.2 (223ZXA1A)	223 A5.000	48	03/2001 →		70	12	063377001010	**MAN7001**
1.3 D Multijet	199 A2.000	55	10/2005 → 12/2010		75	12	063358062010	**MAN1098**
1.3 D Multijet	199 A2.000	55	10/2005 →		90	12	063377022010	**MAN7022**
1.3 D Multijet	199 A2.000	55	10/2005 →		105	12	063377023010	**MAN7023**
1.3 D Multijet	199 A2.000	55	10/2005 →		120	12	063377028010	**MAN7028**
1.3 JTD 16V	188 A9.000	51	05/2004 → 09/2005		90	12	063358061010	**MAN1097**
1.3 JTD 16V	188 A9.000	51	05/2004 → 09/2005		75	12	063358062010	**MAN1098**
1.3 JTD 16V	188 A9.000	51	05/2004 →		105	12	063377494010	**MAN7494**
1.3 JTD 16V Multijet	223 A9.000	62	08/2006 → 12/2010		90	12	063358061010	**MAN1097**
1.3 JTD 16V Multijet	223 A9.000	62	08/2006 → 12/2010		75	12	063358062010	**MAN1098**
1.3 JTD 16V Multijet	223 A9.000	62	08/2006 →		105	12	063377494010	**MAN7494**
1.4	350 A1.000	57	10/2005 →		90	12	063377030010	**MAN7030**
1.6 16V (223ZXD1A)	182 B6.000	76	10/2001 →		90	12	063533250580	**MAN2002**
1.6 16V (223ZXD1A)	182 B6.000	76	10/2001 → 01/2004		110	12	063533250590	**MAN2040**
1.6 16V (223ZXD1A)	182 B6.000	76	10/2001 → 09/2005		105	12	063534150120	**MAN2042**
1.6 Natural Power	182 B6.000	76	09/2002 →		70	12	063377024010	**MAN7024**
1.6 Natural Power	182 B6.000	76	09/2002 →		90	12	063533250580	**MAN2002**
1.6 Natural Power	182 B6.000	76	01/2003 →		110	12	063533250590	**MAN2040**
1.9 D (223ZXB1A)	223 A6.000	46	03/2001 →		90	12	063321729010	**MAN1107**
1.9 D (223ZXB1A)	223 A6.000	46	01/2004 →		105	12	063321826010	**MAN1127**
1.9 D (223ZXB1A)	223 A6.000	46	03/2001 →		65	12	063321833010	**MAN1128**
1.9 D (223ZXB1A)	223 A6.000	46	03/2001 →		120	12	063321859010	**MAN1117**
1.9 JTD	223 A7.000, 223 B1.000	77	07/2003 →		90	12	063321729010	**MAN1107**
1.9 JTD	223 A7.000, 223 B1.000	77	07/2003 → 12/2010		90	12	063321819010	**MAN1110**
1.9 JTD	223 A7.000, 223 B1.000	77	09/2005 →		105	12	063321826010	**MAN1127**
1.9 JTD (223ZXE1A)	182 B9.000	74	10/2001 →		90	12	063321729010	**MAN1107**
1.9 JTD (223ZXE1A)	182 B9.000	74	01/2006 →		105	12	063321826010	**MAN1127**
DOBLO Cargo (263)								
1.3 D Multijet	199 A3.000, 263 A2.000	66	02/2010 →		90	12	063377022010	**MAN7022**
1.3 D Multijet	199 A3.000, 263 A2.000	66	02/2010 →		105	12	063377023010	**MAN7023**
1.3 D Multijet	199 A3.000, 263 A2.000	66	02/2010 →		70	12	063377024010	**MAN7024**
1.3 D Multijet	199 A3.000, 263 A2.000	66	02/2010 →		120	12	063377028010	**MAN7028**
1.4	843 A1.000	70	02/2010 →		120	12	063377027010	**MAN7027**
1.4	843 A1.000	70	02/2010 →		90	12	063377030010	**MAN7030**
1.4	843 A1.000	70	02/2010 →		105	12	063377031010	**MAN7031**
DUCATO Autobus (230)								
1.9 D	D9B, D9B (XUD9A), DJY	50	04/1998 → 04/2002		75	12	063321617010	**MAN809**
1.9 D Combinato	230 A2.000	51	06/1995 → 12/2001		75	12	063321617010	**MAN809**

		kW			A	V	MAGNETI MARELLI LONG	MAGNETI MARELLI SHORT
FIAT								
DUCATO Autobus (230)								
1.9 TD	DHX (XUD9TF/L)	66	04/1998 → 04/2002		75	12	063321617010	**MAN809**
1.9 TD	DHX (XUD9TF/L)	66	04/1998 → 12/2001		120	12	063321858010	**MAN1116**
1.9 TD Combinato	230 A4.000	59	01/1995 → 04/2002		100	12	063321391010	**MAN789**
1.9 TD Combinato	230 A4.000	59	08/1994 → 04/2002		75	12	063321620010	**MAN811**
1.9 TD Combinato	230 A4.000	59	01/1996 → 01/2001		120	12	063321858010	**MAN1116**
1.9 TD Panorama/Combinato	230 A3.000	60	01/1995 → 04/2002		100	12	063321391010	**MAN789**
1.9 TD Panorama/Combinato	230 A3.000	60	03/1994 → 04/2002		75	12	063321620010	**MAN811**
1.9 TD Panorama/Combinato	230 A3.000	60	01/1996 → 01/2001		120	12	063321858010	**MAN1116**
2.5 D Combinato	8140.67	62	08/1994 → 03/1998		80	12	063388505010	**MAN966**
2.5 TD	8140.47	80	06/1994 → 03/1998		80	12	063388505010	**MAN966**
2.5 TD 4x4	8140.47	85	11/1994 → 04/1998		80	12	063388505010	**MAN966**
2.5 TD 4x4	8140.47	80	11/1994 → 03/1998		80	12	063388505010	**MAN966**
2.5 TDI 4x4	8140.47	85	04/1997 → 04/2002		80	12	063388505010	**MAN966**
2.5 TDI Combinato	8140.47R	80	08/1994 → 03/1998		80	12	063388505010	**MAN966**
2.5 TDI Panorama/Combinato	8140.47	85	03/1994 → 03/1998		80	12	063388505010	**MAN966**
2.5 TDI Panorama/Combinato	8140.47R	80	07/1994 → 03/1998		80	12	063388505010	**MAN966**
2.8 D	8140.63	64	02/1998 → 04/2002		80	12	063388505010	**MAN966**
2.8 TDI	8140.43	90	10/1997 → 03/2002		80	12	063388505010	**MAN966**
2.8 TDI 4x4	8140.43	90	07/1999 → 03/2002		80	12	063388505010	**MAN966**
DUCATO Autobus (244, Z_)								
2.3 JTD	F1AE0481C	81	04/2002 → 08/2006		110	12	063533250530	**MAN2039**
2.3 JTD	F1AE0481C	81	04/2002 → 08/2006		140	12	063535250200	**MAN2031**
2.8 JTD	8140.43N	107	04/2004 → 07/2006		120	12	063310508010	**MAN958**
2.8 JTD	8140.43S	94	04/2002 → 06/2006		120	12	063310508010	**MAN958**
2.8 JTD 4x4	8140.43S	94	07/2002 → 06/2006		120	12	063310508010	**MAN958**
DUCATO Autobus (250)								
120 Multijet 2,3 D	F1AE0481D	88	07/2006 →		110	12	063533250530	**MAN2039**
120 Multijet 2,3 D	F1AE0481D	88	07/2006 →		140	12	063535250200	**MAN2031**
130 Multijet 2,3 D	F1AE3481D	96	01/2007 →		110	12	063533250530	**MAN2039**
130 Multijet 2,3 D	F1AE3481D	96	01/2007 →		140	12	063535250200	**MAN2031**
140 Natural Power	F1CE0441A	100	04/2009 →		110	12	063533251220	**MAN2041**
160 Multijet 3,0 D	F1CE0481D	116	07/2006 →		110	12	063533251220	**MAN2041**
DUCATO Furgonato (230L)								
1.9 D	DJY	50	04/1998 → 04/2002		75	12	063321617010	**MAN809**
1.9 D	230 A2.000	51	03/1994 → 04/2002		75	12	063321620010	**MAN811**
1.9 TD	230 A3.000	60	01/1995 → 04/2002		100	12	063321391010	**MAN789**
1.9 TD	230 A3.000	60	03/1994 → 04/2002		75	12	063321620010	**MAN811**
1.9 TD	230 A3.000	60	01/1996 → 01/2001		120	12	063321858010	**MAN1116**
1.9 TD	DHX (XUD9TF/L)	66	04/1998 → 04/2002		75	12	063321617010	**MAN809**
1.9 TD	DHX (XUD9TF/L)	66	04/1998 → 12/2001		120	12	063321858010	**MAN1116**
1.9 TD CAT	230 A4.000	59	01/1995 → 04/2002		100	12	063321391010	**MAN789**

		kW		i	A	V	LONG	SHORT
FIAT								
DUCATO Furgonato (230L)								
1.9 TD CAT	230 A4.000	59	08/1994 → 04/2002		75	12	063321620010	**MAN811**
1.9 TD CAT	230 A4.000	59	01/1996 → 01/2001		120	12	063321858010	**MAN1116**
2.5 D	8140.67	62	03/1994 → 03/1998	⊛	80	12	063388505010	**MAN966**
2.5 TD	8140.47	80	06/1994 → 03/1998	⊛	80	12	063388505010	**MAN966**
2.5 TD 4x4	8140.47	80	11/1994 → 03/1998	⊛	80	12	063388505010	**MAN966**
2.5 TD 4x4	8140.47	85	11/1994 → 04/1998		80	12	063388505010	**MAN966**
2.5 TDI	8140.47R	80	03/1994 → 03/1998	⊛	80	12	063388505010	**MAN966**
2.5 TDI 4x4	8140.47	85	05/1998 → 04/2002		80	12	063388505010	**MAN966**
2.5 TDI Maxi	8140.47	85	03/1994 → 03/1998	⊛	80	12	063388505010	**MAN966**
2.8 D	8140.63	64	05/1998 → 04/2002	⊛	80	12	063388505010	**MAN966**
2.8 D 4x4	8140.63	64	08/1998 → 04/2002	⊛	80	12	063388505010	**MAN966**
2.8 iDTD 4x4	8140.43	90	05/1998 → 09/2001	⊛	80	12	063388505010	**MAN966**
2.8 TDI	8140.43	90	10/1997 → 03/2002	⊛	80	12	063388505010	**MAN966**
2.8 TDI 4x4	8140.43	90	06/1999 → 03/2002	⊛	80	12	063388505010	**MAN966**
DUCATO Furgonato (244)								
2.3 JTD	F1AE0481C	81	04/2002 → 08/2006		110	12	063533250530	**MAN2039**
2.3 JTD	F1AE0481C	81	04/2002 → 08/2006		140	12	063535250200	**MAN2031**
2.8 JTD	8140.43S	94	04/2002 → 06/2006		120	12	063310508010	**MAN958**
2.8 JTD 4x4	8140.43S	94	07/2002 → 06/2006		120	12	063310508010	**MAN958**
2.8 JTD Power	8140.43N	107	05/2004 → 06/2006		120	12	063310508010	**MAN958**
DUCATO Furgonato (250)								
120 Multijet 2,3 D	F1AE0481D	88	07/2006 →		110	12	063533250530	**MAN2039**
120 Multijet 2,3 D	F1AE0481D	88	07/2006 →		140	12	063535250200	**MAN2031**
130 Multijet 2,3 D	F1AE0481N, F1A-E3481D	96	01/2007 →		110	12	063533250530	**MAN2039**
130 Multijet 2,3 D	F1AE0481N, F1A-E3481D	96	01/2007 →		140	12	063535250200	**MAN2031**
140 Natural Power	F1CE0441A	100	04/2009 →		110	12	063533251220	**MAN2041**
160 Multijet 3,0 D	F1CE0481D	116	07/2006 →		110	12	063533251220	**MAN2041**
DUCATO Furgonato (280)								
1.9 D	149 B1.000	52	01/1988 → 08/1990		55	12	063321011010	**MAN349**
1.9 TD	280 A1.000	60	03/1989 → 08/1990		55	12	063321011010	**MAN349**
2.4 D	8144.61	53	01/1982 → 12/1985	◎	65	12	063320049010	**MAN771**
2.4 D	8144.61	53	01/1982 → 12/1985		65	12	063321021010	**MAN354**
2.4 D	8144.61	53	01/1982 → 12/1985		55	12	063321041010	**MAN284**
2.4 D	8144.61	53	01/1982 → 08/1990		55	12	063321042010	**MAN283**
2.5 D	8144.67, CRD93L (U25-661)	55	01/1986 → 08/1990	◎	65	12	063320049010	**MAN771**
2.5 D	8144.67, CRD93L (U25-661)	55	01/1986 → 08/1990	◎	65	12	063321019010	**MAN274**
2.5 D	8144.67, CRD93L (U25-661)	55	01/1986 → 08/1990	◎	65	12	063321021010	**MAN354**
2.5 D	8144.67, CRD93L (U25-661)	55	01/1986 → 08/1990		55	12	063321041010	**MAN284**
2.5 D 4x4	8144.67	55	03/1989 → 08/1990		65	12	063321021010	**MAN354**
2.5 D 4x4	8144.67	55	03/1989 → 08/1990		55	12	063321041010	**MAN284**

		kW			A	V	LONG	SHORT
FIAT								
DUCATO Furgonato (290)								
1.9 D	149 B1.000	52	07/1990 → 03/1994		55	12	063321112010	**MAN379**
2.5 D 4x4	8144.67	55	07/1990 → 03/1994		65	12	063321021010	**MAN354**
2.5 D 4x4	8144.67	55	07/1990 → 03/1994		55	12	063321041010	**MAN284**
2.5 TD	8140.27	70	07/1990 → 03/1994		65	12	063321021010	**MAN354**
2.5 TD	8140.27	70	07/1990 → 03/1994		55	12	063321041010	**MAN284**
2.5 TD 4x4	8140.27	70	07/1990 → 03/1994		65	12	063321021010	**MAN354**
2.5 TD 4x4	8140.27	70	07/1990 → 03/1994		55	12	063321041010	**MAN284**
DUCATO Panorama (280)								
1.9 D	149 B1.000	52	02/1987 → 08/1990		55	12	063321011010	**MAN349**
2.4 D	8144.61	53	07/1982 → 12/1985		65	12	063320049010	**MAN771**
2.4 D	8144.61	53	07/1982 → 12/1985		65	12	063321019010	**MAN274**
2.4 D	8144.61	53	07/1982 → 12/1985		65	12	063321021010	**MAN354**
2.4 D	8144.61	53	07/1982 → 12/1985		55	12	063321041010	**MAN284**
2.4 TD	8144.21, 8144.21.220	68	01/1987 → 08/1990		65	12	063321021010	**MAN354**
2.4 TD	8144.21, 8144.21.220	68	01/1987 → 08/1990		55	12	063321041010	**MAN284**
2.4 TD 4x4	8144.21	68	01/1989 → 08/1990		65	12	063321021010	**MAN354**
2.4 TD 4x4	8144.21	68	01/1989 → 08/1990		55	12	063321041010	**MAN284**
2.4 TD 4x4	8144.21	68	01/1986 → 08/1990		55	12	063321042010	**MAN283**
2.5 D	8144.67, CRD93L (U25-661)	55	01/1986 → 08/1990		65	12	063320049010	**MAN771**
2.5 D	8144.67, CRD93L (U25-661)	55	01/1986 → 08/1990		65	12	063321019010	**MAN274**
2.5 D	8144.67, CRD93L (U25-661)	55	01/1986 → 08/1990		65	12	063321021010	**MAN354**
2.5 D	8144.67, CRD93L (U25-661)	55	01/1986 → 08/1990		55	12	063321041010	**MAN284**
2.5 D 4x4	8144.67	55	01/1989 → 08/1990		65	12	063321021010	**MAN354**
2.5 D 4x4	8144.67	55	01/1989 → 08/1990		55	12	063321041010	**MAN284**
2.5 D 4x4	8144.67	55	01/1987 → 08/1990		55	12	063321042010	**MAN283**
DUCATO Panorama (290)								
1.9 D	149 B1.000	52	07/1990 → 03/1994		55	12	063321112010	**MAN379**
1.9 TD	280 A1.000	60	01/1992 → 03/1994		55	12	063321191010	**MAN330**
2.5 D	8144.67	55	07/1990 → 03/1994		65	12	063321021010	**MAN354**
2.5 D	8144.67	55	07/1990 → 03/1994		55	12	063321041010	**MAN284**
2.5 D 4x4	8144.67	55	07/1990 → 03/1994		65	12	063321021010	**MAN354**
2.5 D 4x4	8144.67	55	07/1990 → 03/1994		55	12	063321041010	**MAN284**
2.5 TD	8140.27	70	08/1990 → 03/1994		65	12	063321021010	**MAN354**
2.5 TD	8140.27	70	08/1990 → 03/1994		55	12	063321041010	**MAN284**
2.5 TD 4x4	8140.27	70	01/1991 → 03/1994		65	12	063321021010	**MAN354**
2.5 TD 4x4	8140.27	70	07/1990 → 02/1994		65	12	063321021010	**MAN354**
2.5 TD 4x4	8140.27	70	01/1991 → 03/1994		55	12	063321041010	**MAN284**
DUCATO Pianale piatto/Telaio (230)								
1.9 D	230 A2.000	51	01/1995 → 04/2002		75	12	063321617010	**MAN809**
1.9 D	230 A2.000	51	03/1994 → 04/2002		75	12	063321620010	**MAN811**

		kW		i	A	V	LONG	SHORT
FIAT								
DUCATO Pianale piatto/Telaio (230)								
1.9 D	DJY	50	04/1998 → 04/2002		75	12	063321617010	**MAN809**
1.9 TD	230 A3.000	60	01/1995 → 04/2002		100	12	063321391010	**MAN789**
1.9 TD	230 A3.000	60	03/1994 → 04/2002		75	12	063321620010	**MAN811**
1.9 TD	230 A3.000	60	01/1996 → 01/2001		120	12	063321858010	**MAN1116**
1.9 TD	DHX (XUD9TF/L)	66	04/1998 → 04/2002		75	12	063321617010	**MAN809**
1.9 TD	DHX (XUD9TF/L)	66	04/1998 → 12/2001		120	12	063321858010	**MAN1116**
1.9 TD CAT	230 A4.000	59	08/1994 → 04/2002		75	12	063321620010	**MAN811**
1.9 TD CAT	230 A4.000	59	01/1996 → 01/2001		120	12	063321858010	**MAN1116**
2.5 D	8140.67	62	03/1994 → 04/2002	⎈	80	12	063388505010	**MAN966**
2.5 D 4x4	8140.67	62	03/1994 → 04/2002	⎈	80	12	063388505010	**MAN966**
2.5 TD	8140.47	85	06/1994 → 04/1998		80	12	063388505010	**MAN966**
2.5 TD	8140.47	80	06/1994 → 03/1998	⎈	80	12	063388505010	**MAN966**
2.5 TD 4x4	8140.47	80	11/1994 → 03/1998	⎈	80	12	063388505010	**MAN966**
2.5 TD 4x4	8140.47	85	11/1994 → 04/1998		80	12	063388505010	**MAN966**
2.5 TDI	8140.47	85	03/1994 → 04/2002		80	12	063388505010	**MAN966**
2.5 TDI	8140.47R	80	03/1994 → 04/2002		80	12	063388505010	**MAN966**
2.5 TDI 4x4	8140.47	85	06/1998 → 04/2002		80	12	063388505010	**MAN966**
2.8 D	8140.63	64	02/1998 → 04/2002	⎈	80	12	063388505010	**MAN966**
2.8 iDTD 4x4	8140.43	90	05/1998 → 09/2001	⎈	80	12	063388505010	**MAN966**
2.8 TDI	8140.43	90	12/1998 → 03/2002	⎈	80	12	063388505010	**MAN966**
DUCATO Pianale piatto/Telaio (244)								
2.3 JTD	F1AE0481C	81	04/2002 → 08/2006		110	12	063533250530	**MAN2039**
2.3 JTD	F1AE0481C	81	04/2002 → 08/2006		140	12	063535250200	**MAN2031**
2.8 JTD	8140.43	90	11/2003 → 07/2006		120	12	063310508010	**MAN958**
2.8 JTD	8140.43S	94	04/2002 → 06/2006		120	12	063310508010	**MAN958**
2.8 JTD 4x4	8140.43	90	11/2003 → 07/2006		120	12	063310508010	**MAN958**
2.8 JTD 4x4	8140.43S	94	10/2002 →		120	12	063310508010	**MAN958**
2.8 JTD Power	8140.43N	107	05/2004 → 06/2006		120	12	063310508010	**MAN958**
DUCATO Pianale piatto/Telaio (250)								
120 Multijet 2,3 D	F1AE0481D	88	07/2006 →		110	12	063533250530	**MAN2039**
120 Multijet 2,3 D	F1AE0481D	88	07/2006 →		140	12	063535250200	**MAN2031**
130 Multijet 2,3 D	F1AE0481N, F1A-E3481D	96	01/2007 →		110	12	063533250530	**MAN2039**
130 Multijet 2,3 D	F1AE0481N, F1A-E3481D	96	01/2007 →		140	12	063535250200	**MAN2031**
160 Multijet 3,0 D	F1CE0481D	116	07/2006 →		110	12	063533251220	**MAN2041**
DUCATO Pianale piatto/Telaio (280)								
1.9 D	149 B1.000	52	01/1988 → 08/1990		55	12	063321011010	**MAN349**
2.4 TD	8144.21	68	01/1986 → 08/1990		65	12	063321021010	**MAN354**
2.4 TD	8144.21	68	01/1986 → 08/1990		55	12	063321041010	**MAN284**
2.5 D	8144.67, CRD93L (U25-661)	55	01/1986 → 08/1990		65	12	063321021010	**MAN354**
2.5 D	8144.67, CRD93L (U25-661)	55	01/1986 → 08/1990		55	12	063321041010	**MAN284**
2.5 D 4x4	8144.67	55	03/1989 → 08/1990		65	12	063321021010	**MAN354**
2.5 D 4x4	8144.67	55	03/1989 → 08/1990		55	12	063321041010	**MAN284**

		kW			A	V	LONG	SHORT
FIAT								
DUCATO Pianale piatto/Telaio (290								
1.9 TD	280 A1.000	60	01/1992 → 03/1994		55	12	063321191010	**MAN330**
2.5 D	8144.67	55	07/1990 → 03/1994		65	12	063321021010	**MAN354**
2.5 D 4x4	8144.67	55	07/1990 → 03/1994		65	12	063321021010	**MAN354**
2.5 D 4x4	8144.67	55	07/1990 → 03/1994		55	12	063321041010	**MAN284**
2.5 TD	8140.27	70	07/1990 → 03/1994		65	12	063321021010	**MAN354**
2.5 TD	8140.27	70	07/1990 → 03/1994		55	12	063321041010	**MAN284**
2.5 TD 4x4	8140.27	70	07/1990 → 03/1994		65	12	063321021010	**MAN354**
2.5 TD 4x4	8140.27	70	07/1990 → 03/1994		55	12	063321041010	**MAN284**
DUNA (146 B)								
60 1.1	146 A6.000	43	01/1987 → 12/1990		55	12	063321154010	**MAN344**
70 1.3	146 A5.000	49	01/1987 → 12/1990		55	12	063321154010	**MAN344**
DS 1.7	149 B3.000	44	01/1987 → 12/1990		55	12	063321112010	**MAN379**
DUNA Weekend (146 B)								
60 1.1	146 A6.000	43	01/1987 → 12/1990		55	12	063321154010	**MAN344**
70 1.3	146 A5.000	49	01/1987 → 12/1990		55	12	063321154010	**MAN344**
DS 1.7	149 B3.000	44	01/1987 → 12/1990		55	12	063321011010	**MAN349**
DS 1.7	149 B3.000	44	01/1987 → 12/1991		55	12	063321112010	**MAN379**
ELBA (146_)								
1.3	146 A5.000	49	04/1991 → 02/1995		55	12	063321154010	**MAN344**
1.7 D	146 B2.000	43	04/1989 → 12/1996		55	12	063321112010	**MAN379**
FIORINO (127)								
900	100 GL.000	33	10/1977 → 12/1984		55	12	063341454010	**MAN1014**
1050	127 A.000	37	01/1980 → 12/1985		55	12	063321154010	**MAN344**
FIORINO (147)								
1.3	146 A5.000	49	01/1988 → 08/1993		55	12	063321154010	**MAN344**
1.5	149 C1.000	55	01/1988 → 08/1993		55	12	063321154010	**MAN344**
1.7 Diesel	149 B2.000	42	01/1988 →		55	12	063321011010	**MAN349**
1.7 Diesel	149 B2.000	42	01/1988 →	→ 731657	55	12	063321112010	**MAN379**
1.7 Diesel	149 B3.000	44	12/1987 → 12/1990		55	12	063321011010	**MAN349**
1.7 Diesel	149 B3.000	44	01/1988 → 12/1990		55	12	063321112010	**MAN379**
FIORINO Cassone / Furgonato / Promiscuo								
1.3 D Multijet	199 A2.000, 199 A9.000	55	02/2008 →		90	12	063358061010	**MAN1097**
1.3 D Multijet	199 A2.000, 199 A9.000	55	02/2008 →		75	12	063358062010	**MAN1098**
1.3 D Multijet	199 A2.000, 199 A9.000	55	02/2008 →		120	12	063377028010	**MAN7028**
1.4	KFT, KFV	54	02/2008 →		75	12	063341734010	**MAN1166**
FIORINO Furgonato (146 Uno)								
1.7 D	146 B2.000	44	09/1993 → 10/1999		55	12	063321409010	**MAN909**
60 1.1	146 A9.000	40	05/1988 → 12/1993		55	12	063321154010	**MAN344**
60 1.7 D	146 B2.000	42	05/1988 → 10/1996		55	12	063321011010	**MAN349**
60 1.7 D	149 B3.000	44	05/1988 → 05/2000		55	12	063321011010	**MAN349**
60 1.7 D	149 B3.000	44	01/1989 → 05/2000		55	12	063321112010	**MAN379**
60 1.7 D	149 B3.000	44	01/1997 → 05/2000		100	12	063321485010	**MAN1021**

		kW		i	A	V	LONG	SHORT
FIAT								
FIORINO Furgonato (146 Uno)								
65 1.7 TD	146 D7.000	46	01/1997 → 05/2001		55	12	063321011010	**MAN349**
65 1.7 TD	146 D7.000	46	01/1997 → 09/2000	⊛	100	12	063321485010	**MAN1021**
70 1.3	146 A5.000	49	10/1993 → 12/1994		55	12	063321154010	**MAN344**
70 i.e. 1.4	146 C5.000, 146 D5.000	49	01/1993 → 05/2001		65	12	063321157010	**MAN322**
75 i.e. 1.5	149 C1.000	55	05/1988 → 12/1993		55	12	063321154010	**MAN344**
75 i.e. 1.5	149 C1.000	55	01/1989 → 12/1993		65	12	063321157010	**MAN322**
75 i.e. 1.6	146 C6.000, 146 D6.000	55	10/1993 → 05/2001		65	12	063321157010	**MAN322**
FIORINO Pick up (146)								
1.4	146 D5.000	49	02/1998 → 12/1998		65	12	063321157010	**MAN322**
1.6	146 C6.000, 146 D6.000	55	01/1994 → 12/1995		65	12	063321157010	**MAN322**
1.7 D	149 B3.000	44	05/1988 → 12/1990		55	12	063321011010	**MAN349**
1.7 D	149 B3.000	44	01/1989 → 12/1993		55	12	063321112010	**MAN379**
1.7 D	146 B2.000	42	10/1993 → 10/1999		55	12	063321154010	**MAN344**
1.7 D	146 B2.000	42	01/1997 → 10/1999	⊛	100	12	063321485010	**MAN1021**
1.7 TD	146 D7.000	46	01/1997 → 09/2000	⊛	100	12	063321485010	**MAN1021**
FIORINO Pick up (147)								
1.0		37	10/1982 → 12/1985		55	12	063321154010	**MAN344**
GRANDE PUNTO Van (199)								
1.3 D Multijet	199 A2.000	55	04/2008 →	⊛	90	12	063358061010	**MAN1097**
1.3 D Multijet	199 A2.000	55	04/2008 →	⊛	75	12	063358062010	**MAN1098**
IDEA								
1.2 16V	188 A5.000	59	01/2004 →		70	12	063377001010	**MAN7001**
1.2 16V	188 A5.000	59	01/2004 →		90	12	063377010010	**MAN7010**
1.2 16V		59	01/2004 →	◎	70	12	063377012010	**MAN7012**
1.3 D Multijet	199 A3.000	66	10/2005 →		75	12	063358062010	**MAN1098**
1.3 D Multijet	199 A3.000	66	10/2005 →	⊛	90	12	063377022010	**MAN7022**
1.3 D Multijet	199 A3.000	66	10/2005 →	⊛	105	12	063377023010	**MAN7023**
1.3 JTD	188 A9.000	51	01/2004 →		90	12	063358061010	**MAN1097**
1.3 JTD	188 A9.000	51	01/2004 →		75	12	063358062010	**MAN1098**
1.3 JTD	188 A9.000	51	01/2004 →		120	12	063377028010	**MAN7028**
1.3 JTD	188 A9.000	51	01/2004 →	⊛	105	12	063377494010	**MAN7494**
1.4	192 B2.000	66	12/2003 →	⊛	120	12	063377027010	**MAN7027**
1.4 16V	843 A1.000	70	01/2004 →	◎	90	12	063377010010	**MAN7010**
1.4 16V	843 A1.000	70	01/2004 →		70	12	063377011010	**MAN7011**
1.4 16V	843 A1.000	70	01/2004 →	◎	90	12	063377013010	**MAN7013**
1.4 16V	843 A1.000	70	01/2004 →	⊛	120	12	063377027010	**MAN7027**
1.9 JTD	188 B2.000	74	06/2007 →	⊛	105	12	063321826010	**MAN1127**
1.9 JTD	188 B2.000	74	01/2004 →		90	12	063377016010	**MAN7016**
LINEA								
1.3 D Multijet	199 A3.000	66	06/2007 →		90	12	063358061010	**MAN1097**
1.3 D Multijet	199 A3.000	66	06/2007 →		75	12	063358062010	**MAN1098**

		kW		i	A	V	LONG	SHORT
FIAT								
LINEA								
1.3 D Multijet	199 A3.000	66	06/2007 →	⊛	90	12	063377022010	**MAN7022**
1.3 D Multijet	199 A3.000	66	06/2007 →	⊛	105	12	063377023010	**MAN7023**
1.3 D Multijet	199 A3.000	66	06/2007 →	⊛	70	12	063377024010	**MAN7024**
1.3 D Multijet	199 A3.000	66	06/2007 →	⊛	105	12	063377025010	**MAN7025**
1.4	350 A1.000	57	06/2007 →		70	12	063377011010	**MAN7011**
1.4	350 A1.000	57	06/2007 →	⊛	90	12	063377030010	**MAN7030**
1.4	350 A1.000	57	06/2007 →		105	12	063377031010	**MAN7031**
1.4	350 A1.000	57	06/2007 →		120	12	063377426010	**MAN7426**
1.4 T-Jet	198 A4.000	88	09/2007 →	⊛	120	12	063377426010	**MAN7426**
1.6 D Multijet	198 A3.000	77	06/2009 →		100	12	063377017010	**MAN7017**
1.6 D Multijet	198 A3.000	77	06/2009 →		120	12	063377018010	**MAN7018**
MAREA (185)								
1.2 16V	182 B2.000	60	03/1999 → 09/2002	⊛	65	12	063321605010	**MAN939**
1.2 16V	182 B2.000	60	03/1999 →	⊛	90	12	063321715010	**MAN1039**
1.4 80 12V	182 A3.000	59	09/1996 →		90	12	063321729010	**MAN1107**
1.4 80 12V	182 A3.000	59	10/1996 → 02/1999	⊛	85	12	063321810010	**MAN1147**
1.4 80 12V	182 A3.000	59	09/1996 →	⊛	75	12	063321813010	**MAN1151**
1.4 80 12V	182 A3.000	59	09/1996 →		65	12	063321839010	**MAN1119**
1.6	182 B6.000	76	09/2000 → 08/2002	⊛	110	12	063533250590	**MAN2040**
1.6 100 16V	182 A4.000	76	09/1996 →		85	12	063321328010	**MAN784**
1.6 100 16V	182 A4.000	76	09/1996 → 09/2002	⊛	75	12	063321606010	**MAN799**
1.6 100 16V	182 A4.000	76	09/1996 →	⊛	75	12	063321607010	**MAN800**
1.6 100 16V	182 A4.000	76	09/1996 →		90	12	063533250580	**MAN2002**
1.6 100 16V	182 A4.000	76	10/1999 → 12/2002	⊛	105	12	063534150120	**MAN2042**
1.6 100 16V Bipower	185 A3.000, 186 A4.000	76	04/1999 →		85	12	063321328010	**MAN784**
1.6 100 16V Bipower	185 A3.000, 186 A4.000	76	04/1999 →	⊛	75	12	063321607010	**MAN800**
1.6 100 16V Bipower	185 A3.000, 186 A4.000	76	04/1999 →		90	12	063533250580	**MAN2002**
1.6 16V	185 A3.000	75	10/1997 → 02/1999	⊛	85	12	063321328010	**MAN784**
1.8 115 16V	182 A2.000	83	10/1996 →	⊛	90	12	063321729010	**MAN1107**
1.8 115 16V	182 A2.000	83	09/1996 →	→ 429293	100	12	063321800010	**MAN1104**
1.8 115 16V	182 A2.000	83	09/1996 →	⊛	85	12	063321802010	**MAN1102**
1.8 115 16V	182 A2.000	83	09/1996 →		100	12	063321803010	**MAN1100**
1.8 115 16V	182 A2.000	83	10/1996 → 02/1999	⊛	85	12	063321810010	**MAN1147**
1.8 115 16V	182 A2.000	83	01/2001 →	⊛	75	12	063321813010	**MAN1151**
1.8 115 16V	182 A2.000	83	09/1996 →		120	12	063321859010	**MAN1117**
1.8 115 16V	182 A2.000	83	09/1996 →	⊛	140	12	063321862010	**MAN1162**
1.9 JTD 105	182 B4.000	77	04/1999 → 08/2000	⊛	90	12	063321729010	**MAN1107**
1.9 JTD 105	182 B4.000	77	04/1999 → 08/2000	⊛	85	12	063321802010	**MAN1102**
1.9 JTD 105	182 B4.000	77	04/1999 → 08/2000		105	12	063321826010	**MAN1127**
1.9 JTD 105	182 B4.000	77	04/1999 → 01/2001		120	12	063321859010	**MAN1117**
1.9 JTD 110	186 A6.000	81	01/2001 →		90	12	063321729010	**MAN1107**
1.9 JTD 110	186 A6.000	81	01/2001 →		105	12	063321826010	**MAN1127**

		kW		i	A	V	MAGNETI MARELLI LONG	MAGNETI MARELLI SHORT
FIAT								
MAREA (185)								
1.9 JTD 110	186 A6.000	81	01/2001 →		120	12	063321859010	**MAN1117**
1.9 TD 75	182 A8.000	55	09/1996 →		90	12	063321729010	**MAN1107**
1.9 TD 75	182 A8.000	55	09/1996 →		100	12	063321803010	**MAN1100**
1.9 TD 75	182 A8.000	55	01/2001 →		75	12	063321813010	**MAN1151**
1.9 TD 75	182 A8.000	55	01/2001 →		105	12	063321826010	**MAN1127**
1.9 TD 75	182 A8.000	55	09/1996 →	⊛	140	12	063321862010	**MAN1162**
1.9 TD 100	182 A7.000	74	09/1996 →		90	12	063321729010	**MAN1107**
1.9 TD 100	182 A7.000	74	09/1996 →		100	12	063321803010	**MAN1100**
1.9 TD 100	182 A7.000	74	01/2001 →		75	12	063321813010	**MAN1151**
1.9 TD 100	182 A7.000	74	01/2001 →		105	12	063321826010	**MAN1127**
1.9 TD 100	182 A7.000	74	09/1996 →	⊛	140	12	063321862010	**MAN1162**
2.0 150 20V	182 A1.000	108	09/1996 → 04/1999	⊛	85	12	063321402010	**MAN791**
2.0 150 20V	185 A8.000	110	01/2001 → 12/2002	⊛	85	12	063321402010	**MAN791**
2.0 155 20V	182 B7.000	113	04/1999 → 01/2001	⊛	85	12	063321402010	**MAN791**
2.4 JTD 130	185 A6.000, 839 A5.000	96	04/1999 →	⊛	90	12	063321729010	**MAN1107**
2.4 JTD 130	185 A6.000, 839 A5.000	96	04/1999 →		105	12	063321826010	**MAN1127**
2.4 JTD 130	185 A6.000, 839 A5.000	96	01/2001 →		120	12	063321859010	**MAN1117**
2.4 TD 125	185 A2.000	91	11/1996 → 02/1999	⊛	90	12	063321729010	**MAN1107**
2.4 TD 125	185 A2.000	91	11/1996 → 02/1999	⊛	85	12	063321802010	**MAN1102**
2.4 TD 125	185 A2.000	91	10/1996 → 02/1999	⊛	85	12	063321810010	**MAN1147**
2.4 TD 125	185 A2.000	91	11/1996 → 02/1999	⊛	75	12	063321813010	**MAN1151**
2.4 TD 125	185 A2.000	91	09/1996 → 04/1999		120	12	063321859010	**MAN1117**
MAREA Weekend (185)								
1.2 16V	182 B2.000	60	10/1998 →	⊛	90	12	063321715010	**MAN1039**
1.2 16V	182 B2.000	60	03/1999 → 09/2002	⊛	65	12	063321605010	**MAN939**
1.4 80 12V	182 A3.000	59	09/1996 →		90	12	063321729010	**MAN1107**
1.4 80 12V	182 A3.000	59	10/1996 → 02/1999	⊛	85	12	063321810010	**MAN1147**
1.4 80 12V	182 A3.000	59	09/1996 →	⊛	75	12	063321813010	**MAN1151**
1.6	182 B6.000	76	05/2001 → 08/2002	⊛	105	12	063534150120	**MAN2042**
1.6 100 16V	182 A4.000	76	09/1996 →		85	12	063321328010	**MAN784**
1.6 100 16V	182 A4.000	76	09/1996 → 09/2002	⊛	75	12	063321606010	**MAN799**
1.6 100 16V	182 A4.000	76	09/1996 →	⊛	75	12	063321607010	**MAN800**
1.6 100 16V	182 A4.000	76	09/1996 →	⊛	90	12	063321715010	**MAN1039**
1.6 100 16V	182 A4.000	76	09/1996 →		90	12	063533250580	**MAN2002**
1.8 115 16V	182 A2.000	83	09/1996 →	⊛	90	12	063321729010	**MAN1107**
1.8 115 16V	182 A2.000	83	09/1996 →	→ 429293	100	12	063321800010	**MAN1104**
1.8 115 16V	182 A2.000	83	09/1996 →	⊛	85	12	063321802010	**MAN1102**
1.8 115 16V	182 A2.000	83	09/1996 →		100	12	063321803010	**MAN1100**
1.8 115 16V	182 A2.000	83	10/1996 → 02/1999	⊛	85	12	063321810010	**MAN1147**
1.8 115 16V	182 A2.000	83	09/1996 →		120	12	063321859010	**MAN1117**
1.8 115 16V	182 A2.000	83	09/1996 →		140	12	063321862010	**MAN1162**
1.8 115 16V	182 A2.000	83	01/2001 →	⊛	75	12	063321813010	**MAN1151**

		kW			A	V	LONG	SHORT
FIAT								
MAREA Weekend (185)								
1.9 JTD 105	182 B4.000	77	04/1999 →		90	12	063321729010	**MAN1107**
1.9 JTD 105	182 B4.000	77	04/1999 →		85	12	063321802010	**MAN1102**
1.9 JTD 105	182 B4.000	77	04/1999 →		105	12	063321826010	**MAN1127**
1.9 JTD 105	182 B4.000	77	04/1999 →		120	12	063321859010	**MAN1117**
1.9 JTD 110	186 A6.000	81	01/2001 →		90	12	063321729010	**MAN1107**
1.9 JTD 110	186 A6.000	81	01/2001 →		105	12	063321826010	**MAN1127**
1.9 JTD 110	186 A6.000	81	01/2001 →		120	12	063321859010	**MAN1117**
1.9 TD 100	182 A7.000, 182 B9.000	74	09/1996 →		90	12	063321729010	**MAN1107**
1.9 TD 100	182 A7.000, 182 B9.000	74	09/1996 →		100	12	063321803010	**MAN1100**
1.9 TD 100	182 A7.000, 182 B9.000	74	09/1996 →		140	12	063321862010	**MAN1162**
1.9 TD 100	182 A7.000, 182 B9.000	74	01/2001 →		75	12	063321813010	**MAN1151**
1.9 TD 100	182 A7.000, 182 B9.000	74	01/2001 →		105	12	063321826010	**MAN1127**
1.9 TD 75	182 A8.000	55	09/1996 →		90	12	063321729010	**MAN1107**
1.9 TD 75	182 A8.000	55	09/1996 →		100	12	063321803010	**MAN1100**
1.9 TD 75	182 A8.000	55	09/1996 →		140	12	063321862010	**MAN1162**
1.9 TD 75	182 A8.000	55	01/2001 →		75	12	063321813010	**MAN1151**
1.9 TD 75	182 A8.000	55	01/2001 →		105	12	063321826010	**MAN1127**
2.0 150 20V	182 A1.000	108	09/1996 → 04/1999		85	12	063321402010	**MAN791**
2.0 150 20V	185 A8.000	110	01/2001 → 09/2002		85	12	063321402010	**MAN791**
2.0 155 20V	182 B7.000	113	04/1999 → 01/2001		85	12	063321402010	**MAN791**
2.0 155 20V	182 B7.000	113	04/1999 → 08/2000		100	12	063321800010	**MAN1104**
2.0 155 20V	182 B7.000	113	04/1999 → 08/2000		140	12	063321862010	**MAN1162**
2.4 JTD 130	185 A6.000, 839 A5.000	96	04/1999 →		90	12	063321729010	**MAN1107**
2.4 JTD 130	185 A6.000, 839 A5.000	96	01/2001 →		120	12	063321859010	**MAN1117**
2.4 TD 125	185 A2.000	91	11/1996 → 02/1999		90	12	063321729010	**MAN1107**
2.4 TD 125	185 A2.000	91	11/1996 → 02/1999		85	12	063321802010	**MAN1102**
2.4 TD 125	185 A2.000	91	10/1996 → 02/1999		85	12	063321810010	**MAN1147**
2.4 TD 125	185 A2.000	91	11/1996 → 02/1999		75	12	063321813010	**MAN1151**
2.4 TD 125	185 A2.000	91	09/1996 → 04/1999		120	12	063321859010	**MAN1117**
MULTIPLA (186)								
1.6	182 B6.000	76	09/2000 → 02/2001		110	12	063533250590	**MAN2040**
1.6	182 B6.000	74	03/2001 → 01/2005		105	12	063534150120	**MAN2042**
1.6	182 B6.000	76	09/2000 → 02/2001		105	12	063534150120	**MAN2042**
1.6 100 16V (186AXA1A)	182 A4.000	76	04/1999 → 03/2002		90	12	063533250580	**MAN2002**
1.6 100 16V (186AXA1A)	182 A4.000	76	04/1999 → 03/2002		110	12	063533250590	**MAN2040**
1.6 100 16V (186AXA1A)	182 A4.000	76	04/1999 → 01/2005		105	12	063534150120	**MAN2042**
1.6 16V (186AGB1A)	182 B6.000	70	04/2002 → 01/2005		110	12	063533250590	**MAN2040**
1.6 16V (186AGB1A)	182 B6.000	70	04/2002 → 01/2005		105	12	063534150120	**MAN2042**
1.6 16V Bipower (186AM-B1A)	186 A4.000	76	04/1999 → 03/2002		90	12	063533250580	**MAN2002**
1.6 16V Bipower (186AM-B1A)	186 A4.000	76	04/1999 → 10/2000		110	12	063533250590	**MAN2040**

		kW		i	A	V	MAGNETI MARELLI LONG	MAGNETI MARELLI SHORT
FIAT								
MULTIPLA (186)								
1.6 16V Bipower (186AM-B1A)	186 A4.000	76	04/1999 → 10/2000		105	12	063534150120	**MAN2042**
1.6 16V Bipower (186AXC1A)	182 B6.000	76	10/2001 →		90	12	063533250580	**MAN2002**
1.6 16V Bipower (186AXC1A)	182 B6.000	76	10/2001 → 01/2005		110	12	063533250590	**MAN2040**
1.6 16V Bipower (186AXC1A)	182 B6.000	76	10/2001 → 01/2005		105	12	063534150120	**MAN2042**
1.6 16V Bipower (186AXC1A)	182 B6.000	76	07/2004 →	⊛	65	12	063321747010	**MAN1041**
1.6 16V Blupower (186AMA1A)	186 A3.000	70	04/1999 → 03/2002		90	12	063533250580	**MAN2002**
1.6 16V Blupower (186AMA1A)	186 A3.000	70	04/1999 → 03/2002		110	12	063533250590	**MAN2040**
1.6 16V Blupower (186AMA1A)	186 A3.000	70	04/1999 → 03/2002		105	12	063534150120	**MAN2042**
1.9 JTD 105 (186AXB1A)	182 B4.000	77	04/1999 →		90	12	063321729010	**MAN1107**
1.9 JTD 105 (186AXB1A)	182 B4.000	77	04/1999 →		105	12	063321826010	**MAN1127**
1.9 JTD 105 (186AXB1A)	182 B4.000	77	04/1999 →		120	12	063321858010	**MAN1116**
1.9 JTD 110	186 A6.000	81	03/2001 → 07/2002		90	12	063321729010	**MAN1107**
1.9 JTD 110	186 A6.000	81	03/2001 → 03/2002		90	12	063321819010	**MAN1110**
1.9 JTD 110	186 A6.000	81	03/2001 → 07/2002	⊛	105	12	063321826010	**MAN1127**
1.9 JTD 110	186 A6.000	81	03/2001 → 07/2002		120	12	063321859010	**MAN1117**
1.9 JTD 115	186 A8.000	85	07/2002 →		90	12	063321729010	**MAN1107**
1.9 JTD 115	186 A8.000	85	07/2002 → 12/2010		90	12	063321819010	**MAN1110**
1.9 JTD 115	186 A8.000	85	07/2002 →	⊛	105	12	063321826010	**MAN1127**
1.9 JTD 115	186 A8.000	85	07/2002 →		120	12	063321859010	**MAN1117**
PALIO (178BX)								
1.0		45	06/1996 → 08/1997	⊛	65	12	063321615010	**MAN807**
1.0		45	04/1996 →		65	12	063321616010	**MAN808**
1.2	178 B7.045, 178 C4.066, 188 A4.000	44	07/1997 → 08/2002		75	12	063321763010	**MAN1171**
1.2	178 B7.045, 178 C4.066, 188 A4.000	44	07/1997 → 08/2002		65	12	063321173010	**MAN331**
1.2	176 A8.000, 178 B5.000, 178 E2.000	54	11/1999 → 09/2001	⊛	75	12	063321604010	**MAN798**
1.2	176 A8.000, 178 B5.000, 178 E2.000	54	03/2001 →		90	12	063321715010	**MAN1039**
1.2	178 E2.000	50	06/1999 → 10/2000		75	12	063321763010	**MAN1171**
1.2	188 A5.000	59	09/2001 →	⊛	70	12	063377008010	**MAN7008**
1.2	188 A5.000	59	09/2001 →	⊛	105	12	063377009010	**MAN7009**
1.3 JTD Multijet	188 A9.000	51	06/2003 →		90	12	063358061010	**MAN1097**
1.3 JTD Multijet	188 A9.000	51	06/2003 →		75	12	063358062010	**MAN1098**
1.4	178 B2.000	51	04/1996 →		65	12	063321608010	**MAN801**
1.4 Cat.	178 B2.016	51	03/1998 → 09/2001	⊛	65	12	063321625010	**MAN645**
1.6 16V	178 B3.000	74	03/1998 → 10/1999	⊛	85	12	063321340010	**MAN646**
1.6 16V	178 B3.000	74	04/1996 → 09/1999		75	12	063321606010	**MAN799**
1.6 16V	178 B3.000	74	04/1996 →		90	12	063533250580	**MAN2002**
1.9 D	223 A6.000	46	09/2000 →		90	12	063321729010	**MAN1107**
1.9 D	223 A6.000	46	09/2000 →		65	12	063321833010	**MAN1128**

		kW			A	V	LONG	SHORT
FIAT								
PALIO Weekend (178DX)								
1.2	188 A5.000	59	09/2001 →		70	12	063377008010	**MAN7008**
1.2 (178DX.G1A)	178 B5.000	54	04/1996 → 02/2001		65	12	063321600010	**MAN640**
1.2 (178DX.G1A)	178 B5.000	54	04/1996 → 02/2001		75	12	063321604010	**MAN798**
1.2 (178DX.G1A)	178 B5.000	54	04/1996 → 02/2001		120	12	063321854010	**MAN955**
1.2 (178DX.G1A)	178 B5.000	54	04/1996 → 02/2001		90	12	063321863010	**MAN1156**
1.2 (178DYA1A)	178 C4.066, 188 A4.000	44	02/2001 →		65	12	063321600010	**MAN640**
1.2 (178DYA1A)	178 C4.066, 188 A4.000	44	02/2001 → 09/2001		75	12	063321604010	**MAN798**
1.2 (178DYA1A)	178 C4.066, 188 A4.000	44	02/2001 →		70	12	063377008010	**MAN7008**
1.6 16V (178DX.D1A)	178 B3.000	74	09/1997 → 10/1999		85	12	063321340010	**MAN646**
1.6 16V (178DX.D1A)	178 B3.000	74	04/1996 → 09/1999		75	12	063321606010	**MAN799**
1.6 16V (178DX.D1A)	178 B3.000	74	04/1996 → 02/2001		90	12	063533250580	**MAN2002**
1.6 16V (178DYC1A06)	182 B6.000	76	02/2001 →		90	12	063533250580	**MAN2002**
1.7 TD (178DX.H1A)	176 A3.000	51	04/1996 → 03/2001		85	12	063321332010	**MAN642**
1.7 TD (178DX.H1A)	176 A3.000	51	04/1996 → 03/2001		65	12	063321615010	**MAN807**
1.7 TD (178DX.H1A)	176 A3.000	51	04/1996 → 03/2001		120	12	063321854010	**MAN955**
1.9 D (178DYD1A07)	223 A6.000	46	03/2001 →		90	12	063321729010	**MAN1107**
1.9 D (178DYD1A07)	223 A6.000	46	03/2001 → 09/2001		90	12	063321819010	**MAN1110**
1.9 D (178DYD1A07)	223 A6.000	46	03/2001 →		65	12	063321833010	**MAN1128**
1.9 JTD	188 A2.000	59	09/2001 →		90	12	063321729010	**MAN1107**
1.9 JTD	188 A2.000	59	09/2001 →		65	12	063321833010	**MAN1128**
PANDA (141A_)								
750 (141AA)	156 A4.000	25	01/1986 → 01/1995		65	12	063321021010	**MAN354**
750 (141AA)	156 A4.000	25	01/1986 → 12/1991		55	12	063321067010	**MAN300**
750 (141AI)	141 B.000	25	01/1986 → 01/1995		45	12	063321000010	**MAN342**
750 (141AI)	141 B.000	25	01/1986 → 01/1995		65	12	063321021010	**MAN354**
750 (141AI)	141 B.000	25	07/1990 → 07/1992		55	12	063341454010	**MAN1014**
750 (141AM) Cat.	156 A4.048	25	01/1995 → 12/1997		45	12	063321000010	**MAN342**
750 (141AM) Cat.	156 A4.048	25	01/1995 → 12/1997		65	12	063321156010	**MAN323**
750 (141AM) Cat.	156 A4.048	25	01/1995 → 12/1997		55	12	063321165010	**MAN382**
800		25	02/1981 → 12/1985		55	12	063341454010	**MAN1014**
900	100 GL3.000, 146 A.000	33	10/1980 → 06/1994		65	12	063321021010	**MAN354**
900	100 GL3.000, 146 A.000	33	01/1982 → 06/1994		55	12	063341454010	**MAN1014**
900	1170 A1.046	29	04/1992 → 12/1996		65	12	063321156010	**MAN323**
900	1170 A1.046	29	04/1992 → 12/1996		55	12	063321165010	**MAN382**
900	1170 A1.046	29	04/1992 → 12/1996		55	12	063341454010	**MAN1014**
950 4x4	A 112 B1.054	35	10/1984 → 09/1985		55	12	063341454010	**MAN1014**
1000	156 A2.100	32	01/1986 → 04/1992		45	12	063321000010	**MAN342**
1000	156 A2.100	32	01/1986 → 12/1990		55	12	063321067010	**MAN300**
1000	156 A3.000	37	01/1986 → 12/1992		45	12	063321000010	**MAN342**
1000	156 A3.000	37	05/1986 → 04/1991		55	12	063321067010	**MAN300**

		kW			A	V	LONG	SHORT
FIAT								
PANDA (141A_)								
1000 4x4	156 A3.000	37	01/1986 → 12/1990		45	12	063321000010	**MAN342**
1000 4x4	156 A3.000	37	01/1986 → 12/1990		55	12	063321067010	**MAN300**
1000 4x4	156 A2.100, 156 A3.100	32	01/1986 → 07/1989		45	12	063321000010	**MAN342**
1000 4x4	141 C2.000, 156 A2.246	33	10/1987 → 12/1990		45	12	063321000010	**MAN342**
1000 4x4	141 C2.000, 156 A2.246	33	10/1987 → 12/1990		55	12	063321067010	**MAN300**
1000 4x4	156 A2.100, 156 A3.100	32	11/1987 → 07/1989		55	12	063321067010	**MAN300**
1000 4x4	141 C2.000, 156 A2.246	33	01/1990 → 05/1991		65	12	063321173010	**MAN331**
1000 i.e. Cat.	141 C2.000, 156 A2.246	33	07/1990 → 03/1997		45	12	063321000010	**MAN342**
1000 i.e. Cat.	141 C2.000, 156 A2.246	33	10/1987 → 08/1998		55	12	063321067010	**MAN300**
1000 i.e. Cat.	141 C2.000, 156 A2.246	33	01/1993 → 08/1998		65	12	063321173010	**MAN331**
1100	156 C.046	37	05/1991 → 03/1995		55	12	063321067010	**MAN300**
1100	156 C.046	37	05/1991 → 12/1999		65	12	063321600010	**MAN640**
1100	176 B2.000, 187 A1.000	40	04/1995 → 09/2003		55	12	063321067010	**MAN300**
1100	176 B2.000, 187 A1.000	40	02/1995 → 09/2003		65	12	063321600010	**MAN640**
1100	176 B2.000, 187 A1.000	40	04/2002 → 09/2003		70	12	063377001010	**MAN7001**
1100 4x4	176 B2.000	40	04/1995 → 07/2004		55	12	063321067010	**MAN300**
1100 4x4	176 B2.000	40	04/1995 → 08/2003		65	12	063321173010	**MAN331**
1100 4x4	176 B2.000	40	02/1995 → 07/2004		65	12	063321600010	**MAN640**
1100 Trekking 4x4	156 C.046	37	01/1992 → 07/2004		45	12	063321000010	**MAN342**
1100 Trekking 4x4	156 C.046	37	01/1992 → 03/1995		55	12	063321067010	**MAN300**
1100 Trekking 4x4	156 C.046	37	10/1991 → 07/2004		65	12	063321600010	**MAN640**
PANDA (169)								
1.1	187 A1.000	40	09/2003 →		65	12	063321600010	**MAN640**
1.1	187 A1.000	40	09/2003 →		70	12	063377008010	**MAN7008**
1.1	187 A1.000	40	09/2003 →		90	12	063377010010	**MAN7010**
1.1	187 A1.000	40	09/2003 →		70	12	063377011010	**MAN7011**
1.1	187 A1.000	40	09/2003 →		90	12	063377013010	**MAN7013**
1.2	188 A4.000	44	09/2003 →		65	12	063321600010	**MAN640**
1.2	188 A4.000	44	09/2003 → 12/2009		70	12	063377001010	**MAN7001**
1.2	188 A4.000	44	09/2003 →		70	12	063377002010	**MAN7002**
1.2	188 A4.000	44	09/2003 →		70	12	063377006010	**MAN7006**
1.2	188 A4.000	44	09/2003 →		70	12	063377008010	**MAN7008**
1.2	188 A4.000	44	09/2003 →		70	12	063377011010	**MAN7011**
1.2	188 A4.000	44	09/2003 →		90	12	063377013010	**MAN7013**
1.2 4x4	188 A4.000	44	10/2004 → 12/2009		70	12	063377001010	**MAN7001**
1.2 4x4	188 A4.000	44	10/2004 →		90	12	063377010010	**MAN7010**
1.2 4x4	188 A4.000	44	10/2004 →		90	12	063377013010	**MAN7013**

		kW			A	V	LONG	SHORT
FIAT								
PANDA (169)								
1.2 Bi-Power / Natural Power	188 A4.000	44	01/2007 →		70	12	063377006010	**MAN7006**
1.2 Bi-Power / Natural Power	188 A4.000	44	01/2007 →		90	12	063377013010	**MAN7013**
1.2 LPG	188 A4.000	44	04/2009 →		70	12	063377006010	**MAN7006**
1.3 D Multijet	188 A9.000	51	09/2003 → 12/2009		90	12	063358061010	**MAN1097**
1.3 D Multijet	188 A9.000	51	01/2004 → 12/2009		75	12	063358062010	**MAN1098**
1.3 D Multijet	169 A1.000	55	06/2006 → 12/2009		90	12	063358061010	**MAN1097**
1.3 D Multijet	169 A1.000	55	06/2006 → 12/2009		75	12	063358062010	**MAN1098**
1.3 D Multijet 4x4	188 A9.000	51	09/2005 → 12/2009		90	12	063358061010	**MAN1097**
1.3 D Multijet 4x4	188 A9.000	51	09/2005 → 12/2009		75	12	063358062010	**MAN1098**
1.3 D Multijet 4x4	169 A1.000	55	09/2010 →		75	12	063358062010	**MAN1098**
1.3 D Multijet 4x4	169 A1.000	55	09/2010 →		90	12	063358061010	**MAN1097**
1.4	169 A3.000	74	10/2006 →		70	12	063377006010	**MAN7006**
1.4	169 A3.000	74	10/2006 →		90	12	063377013010	**MAN7013**
PANDA Van (141_)								
750	141 B.000	25	01/1986 → 07/1992		45	12	063321000010	**MAN342**
750	141 B.000	25	01/1986 → 12/1990		55	12	063321067010	**MAN300**
1000	156 A2.100, 156 A3.100	32	01/1986 → 02/1992		45	12	063321000010	**MAN342**
1000	156 A2.100, 156 A3.100	32	03/1989 → 06/1990		55	12	063321067010	**MAN300**
1000 i.e	156 A2.246	33	08/1992 → 02/2004		45	12	063321000010	**MAN342**
1000 i.e	156 A2.246	33	08/1992 → 02/2004		55	12	063321067010	**MAN300**
1000 i.e	156 A2.246	33	08/1992 → 08/2003		65	12	063321173010	**MAN331**
1.2	188 A4.000	44	09/2004 → 12/2009		70	12	063377001010	**MAN7001**
1.2	188 A4.000	44	09/2004 →		90	12	063377013010	**MAN7013**
1.2 4x4	188 A4.000	44	10/2004 → 12/2009		70	12	063377001010	**MAN7001**
1.3 JTD	188 A9.000	51	03/2004 → 12/2009		90	12	063358061010	**MAN1097**
1.3 JTD	188 A9.000	51	03/2004 → 12/2009		75	12	063358062010	**MAN1098**
1.3 JTD	169 A1.000	55	05/2006 → 12/2009		90	12	063358061010	**MAN1097**
1.3 JTD	169 A1.000	55	05/2006 → 12/2009		75	12	063358062010	**MAN1098**
PENNY VAN (257)								
1.7 D	149 B3.000	44	10/1986 → 12/1990		55	12	063321409010	**MAN909**
PUNTO (176)								
1.4 GT Turbo	176 B6.000	96	12/1996 → 07/1999		65	12	063321173010	**MAN331**
1.7 D	176 B3.000	42	04/1994 → 09/1997		85	12	063321332010	**MAN642**
1.7 D	176 B3.000	42	04/1994 → 09/1997		65	12	063321615010	**MAN807**
1.7 TD	176 A3.000	51	01/1994 → 07/1999		85	12	063321332010	**MAN642**
1.7 TD	176 A3.000	51	05/1997 → 08/1999		65	12	063321615010	**MAN807**
1.7 TD	176 A3.000	51	01/1994 → 09/1999		120	12	063321854010	**MAN955**
1.7 TD	176 A5.000	52	01/1994 → 03/1997		85	12	063321332010	**MAN642**
1.7 TD	176 A5.000	52	01/1996 → 09/1999		65	12	063321615010	**MAN807**
1.7 TD	176 A5.000	52	01/1994 → 12/1996		65	12	063321616010	**MAN808**
1.7 TD	176 A5.000	52	01/1994 → 09/1999		120	12	063321854010	**MAN955**

		kW		i	A	V	MAGNETI MARELLI LONG	MAGNETI MARELLI SHORT
FIAT								
PUNTO (176)								
55 1.1	176 A6.000, 176 B2.000	40	09/1993 → 09/1999		65	12	063321600010	**MAN640**
55 1.1	176 A6.000, 176 B2.000	40	05/1997 → 08/1999		75	12	063321604010	**MAN798**
55 1.1	176 A6.000, 176 B2.000	40	09/1993 → 09/1999		65	12	063321747010	**MAN1041**
60 1.2	176 A7.000	43	01/1994 → 09/1999		65	12	063321600010	**MAN640**
60 1.2	176 A7.000	43	01/1994 → 09/1999		75	12	063321604010	**MAN798**
60 1.2	176 A7.000	43	01/1994 → 09/1994		65	12	063321747010	**MAN1041**
60 1.2	176 B1.000, 176 B4.000	44	03/1994 → 09/1999		65	12	063321600010	**MAN640**
60 1.2	176 B1.000, 176 B4.000	44	03/1994 → 09/1994		75	12	063321604010	**MAN798**
60 1.2	176 B1.000, 176 B4.000	44	03/1994 → 09/1994		65	12	063321747010	**MAN1041**
60 TD 1.7	176 B7.000	46	12/1996 → 07/1999		85	12	063321332010	**MAN642**
60 TD 1.7	176 B7.000	46	09/1996 → 04/1997		65	12	063321615010	**MAN807**
60 TD 1.7	176 B7.000	46	09/1996 → 09/1999		120	12	063321854010	**MAN955**
75 1.2	176 A8.000	54	01/1994 → 09/1999		65	12	063321600010	**MAN640**
75 1.2	176 A8.000	54	01/1994 → 09/1999		75	12	063321604010	**MAN798**
75 1.2	176 A8.000	54	01/1994 → 09/1999		65	12	063321747010	**MAN1041**
85 16V 1.2	176 B9.000	63	04/1997 → 09/1999		65	12	063321173010	**MAN331**
85 16V 1.2	176 B9.000	63	04/1997 → 09/1999		65	12	063321605010	**MAN939**
85 16V 1.2	176 B9.000	63	04/1997 → 09/1999		90	12	063321715010	**MAN1039**
85 16V 1.2	176 B9.000	63	01/1998 → 09/1999		90	12	063321863010	**MAN1156**
90 1.6	176 A9.000	65	01/1994 → 04/1997		85	12	063321340010	**MAN646**
90 1.6	176 A9.000	65	01/1994 → 04/1997		65	12	063321625010	**MAN645**
PUNTO (188)								
1.2 16V 80 (188.233, .235, .253, .255, .333, .353, .639, .63..)	188 A5.000	59	09/1999 →		75	12	063321763010	**MAN1171**
1.2 16V 80 (188.233, .235, .253, .255, .333, .353, .639, .63..)	188 A5.000	59	09/1999 →		105	12	063377009010	**MAN7009**
1.2 16V 80 (188.233, .235, .253, .255, .333, .353, .639, .63..)	188 A5.000	59	09/1999 →		90	12	063377010010	**MAN7010**
1.2 16V 80 (188.233, .235, .253, .255, .333, .353, .639, .63..)	188 A5.000 (E2)	59	01/2000 →		70	12	063377002010	**MAN7002**
1.2 16V 80 (188.233, .235, .253, .255, .333, .353, .639, .63..)	188 A5.000 (E6)	59	01/2000 →		70	12	063377008010	**MAN7008**
1.2 60 (188.030, .050, .130, .150, .230, .250)	188 A4.000	44	09/1999 →		65	12	063321600010	**MAN640**
1.2 60 (188.030, .050, .130, .150, .230, .250)	188 A4.000	44	09/1999 →		75	12	063321761010	**MAN1150**
1.2 60 (188.030, .050, .130, .150, .230, .250)	188 A4.000	44	09/1999 →		70	12	063377008010	**MAN7008**
1.2 60 (188.030, .050, .130, .150, .230, .250)	188 A4.000	44	09/1999 →		105	12	063377009010	**MAN7009**
1.2 60 (188.030, .050, .130, .150, .230, .250)	188 A4.000	44	01/2001 →		70	12	063377002010	**MAN7002**

		kW			A	V	LONG	SHORT
FIAT								
PUNTO (188)								
1.2 60 (188.030, .050, .130, .150, .230, .250)	188 A4.000	44	01/2003 →		70	12	063377006010	**MAN7006**
1.2 60 (188.030, .050, .130, .150, .230, .250)	188 A4.000	44	01/2003 →		105	12	063377007010	**MAN7007**
1.2 Natural Power	188 A4.000	44	09/2003 →	⊛	70	12	063377008010	**MAN7008**
1.2 Natural Power	188 A4.000	44	09/2003 →		90	12	063377010010	**MAN7010**
1.3 JTD 16V	188 A9.000	51	06/2003 →	⊛	90	12	063358061010	**MAN1097**
1.3 JTD 16V	188 A9.000	51	06/2003 →	⊛	75	12	063358062010	**MAN1098**
1.3 JTD 16V	188 A9.000	51	06/2003 →	⊛	105	12	063377494010	**MAN7494**
1.4	843 A1.000	70	09/2003 →		90	12	063377010010	**MAN7010**
1.4	843 A1.000	70	09/2003 →		70	12	063377011010	**MAN7011**
1.8 130 HGT (188.738, .718)	183 A1.000, 188 A6.000	96	09/1999 →		90	12	063321729010	**MAN1107**
1.8 130 HGT (188.738, .718)	183 A1.000, 188 A6.000	96	09/1999 →		120	12	063321859010	**MAN1117**
1.8 130 HGT (188.738, .718)	183 A1.000, 188 A6.000	96	09/1999 → 06/2003		110	12	063533250590	**MAN2040**
1.8 130 HGT (188.738, .718)	183 A1.000, 188 A6.000	96	01/2001 →		65	12	063321839010	**MAN1119**
1.8 130 HGT (188.738, .718)	183 A1.000, 188 A6.000	96	03/2002 →		105	12	063534150120	**MAN2042**
1.9 DS 60 (188.031, .051, .231, .251)	188 A3.000	44	09/1999 →		90	12	063321729010	**MAN1107**
1.9 DS 60 (188.031, .051, .231, .251)	188 A3.000	44	09/1999 →		85	12	063321806010	**MAN1109**
1.9 JTD	188 A7.000	63	10/2001 →		90	12	063321729010	**MAN1107**
1.9 JTD	188 A7.000	63	10/2001 →		85	12	063321802010	**MAN1102**
1.9 JTD	188 A7.000	63	10/2001 →		120	12	063321859010	**MAN1117**
1.9 JTD	188 A7.000	63	01/2003 →		90	12	063321819010	**MAN1110**
1.9 JTD	188 A7.000	63	01/2003 →		105	12	063321826010	**MAN1127**
1.9 JTD	188 B2.000	74	07/2003 →	⊛	105	12	063321826010	**MAN1127**
1.9 JTD 80 (188.237, .257, .337, .357)	188 A2.000	59	09/1999 →	◎	90	12	063321729010	**MAN1107**
1.9 JTD 80 (188.237, .257, .337, .357)	188 A2.000	59	09/1999 →	⊛	85	12	063321802010	**MAN1102**
1.9 JTD 80 (188.237, .257, .337, .357)	188 A2.000	59	09/1999 →	⊛	105	12	063321826010	**MAN1127**
1.9 JTD 80 (188.237, .257, .337, .357)	188 A2.000	59	09/1999 →		120	12	063321859010	**MAN1117**
1.9 JTD 80 (188.237, .257, .337, .357)	188 A2.000	59	10/2000 → 06/2003	◎	90	12	063321819010	**MAN1110**
PUNTO / GRANDE PUNTO (199)								
1.2	199 A4.000	48	10/2005 →	⊛ ; ◎	70	12	063377006010	**MAN7006**
1.2	199 A4.000	48	10/2005 →		105	12	063377007010	**MAN7007**
1.2	199 A4.000	48	10/2005 →	◎	70	12	063377011010	**MAN7011**
1.2	199 A4.000	48	10/2005 →	⊛	120	12	063377027010	**MAN7027**
1.2	199 A4.000	48	10/2005 →	⊛	90	12	063377030010	**MAN7030**
1.2	199 A4.000	48	10/2005 →	❄	105	12	063377031010	**MAN7031**
1.2	169 A4.000	51	09/2010 →		120	12	063377027010	**MAN7027**
1.3 D Multijet	199 A2.000	55	10/2005 →		90	12	063358061010	**MAN1097**
1.3 D Multijet	199 A2.000	55	10/2005 →		75	12	063358062010	**MAN1098**

		kW		i	A	V	LONG	SHORT
FIAT								
PUNTO / GRANDE PUNTO (199)								
1.3 D Multijet	199 A2.000	55	10/2005 →	⊛ ;	90	12	063377019010	**MAN7019**
1.3 D Multijet	199 A2.000	55	10/2005 →		105	12	063377020010	**MAN7020**
1.3 D Multijet	199 A2.000	55	10/2005 →	⊛	105	12	063377023010	**MAN7023**
1.3 D Multijet	199 A3.000	66	10/2005 →		75	12	063358062010	**MAN1098**
1.3 D Multijet	199 A3.000	66	10/2005 →	⊛ ;	90	12	063377019010	**MAN7019**
1.3 D Multijet	199 A3.000	66	10/2005 →		105	12	063377020010	**MAN7020**
1.3 D Multijet	199 A3.000	66	10/2005 →	⊛	90	12	063377022010	**MAN7022**
1.3 D Multijet	199 A3.000	66	10/2005 →	⊛	105	12	063377023010	**MAN7023**
1.3 D Multijet	199 A3.000	66	10/2005 →	⊛	70	12	063377024010	**MAN7024**
1.4	350 A1.000	57	10/2005 →		105	12	063377007010	**MAN7007**
1.4	350 A1.000	57	10/2005 →		70	12	063377011010	**MAN7011**
1.4	350 A1.000	57	10/2005 →	⊛	120	12	063377027010	**MAN7027**
1.4	350 A1.000	57	10/2005 →	⊛	90	12	063377030010	**MAN7030**
1.4	350 A1.000	57	10/2005 →	❄	105	12	063377031010	**MAN7031**
1.4 16V	199 A6.000	70	10/2005 →		70	12	063377006010	**MAN7006**
1.4 16V	199 A6.000	70	10/2005 →		90	12	063377010010	**MAN7010**
1.4 16V	199 A6.000	70	10/2005 →	⊛	120	12	063377027010	**MAN7027**
1.4 Abarth	199 A8.000	132	12/2007 →	⊛	120	12	063377027010	**MAN7027**
1.4 Abarth	199 A8.000	114	12/2007 →	⊛	120	12	063377027010	**MAN7027**
1.4 LPG	350 A1.000	57	12/2008 →		120	12	063377027010	**MAN7027**
1.4 T-Jet	198 A4.000	88	09/2007 →		120	12	063377426010	**MAN7426**
1.9 D Multijet	199 A5.000	96	10/2005 →		120	12	063377004010	**MAN7004**
1.9 D Multijet	199 A5.000	96	10/2005 →		100	12	063377017010	**MAN7017**
1.9 D Multijet	939 A1.000	88	10/2005 →		100	12	063377017010	**MAN7017**
1.9 D Multijet	939 A1.000	88	10/2005 →		120	12	063377004010	**MAN7004**
PUNTO Cabriolet (176C)								
60 1.2	176 A7.000	43	04/1994 → 06/2000		65	12	063321600010	**MAN640**
60 1.2	176 B1.000, 176 B4.000	44	05/1995 → 06/2000		65	12	063321600010	**MAN640**
60 1.2	176 A7.000	43	04/1994 → 06/2000		75	12	063321604010	**MAN798**
60 1.2	176 B1.000, 176 B4.000	44	05/1995 → 12/1997		75	12	063321604010	**MAN798**
60 1.2	176 A7.000	43	04/1994 → 06/2000		65	12	063321747010	**MAN1041**
60 1.2	176 B1.000, 176 B4.000	44	05/1995 → 06/2000		65	12	063321747010	**MAN1041**
85 16V 1.2	176 B9.000	63	04/1997 → 06/2000		65	12	063321173010	**MAN331**
85 16V 1.2	176 B9.000	63	04/1997 → 06/2000	⊛	65	12	063321605010	**MAN939**
85 16V 1.2	176 B9.000	63	04/1997 → 06/2000		90	12	063321715010	**MAN1039**
90 1.6	176 A9.000	65	04/1994 → 04/1997		85	12	063321340010	**MAN646**
90 1.6	176 A9.000	65	04/1994 → 04/1997		65	12	063321625010	**MAN645**
PUNTO EVO								
1.2	199 A4.000	48	10/2009 →		70	12	063377006010	**MAN7006**
1.2	199 A4.000	48	10/2009 →	⊛	120	12	063377027010	**MAN7027**
1.2	199 A4.000	48	10/2009 →	⊛	90	12	063377030010	**MAN7030**

		kW			A	V	LONG	SHORT
FIAT								
PUNTO EVO								
1.2	199 A4.000	48	10/2009 →		105	12	063377031010	**MAN7031**
1.3 D Multijet	199 A2.000, 199 A9.000	55	10/2009 →		90	12	063358061010	**MAN1097**
1.3 D Multijet	199 A2.000, 199 A9.000	55	10/2009 →		75	12	063358062010	**MAN1098**
1.3 D Multijet	199 A2.000, 199 A9.000	55	10/2009 →	⊛	105	12	063377023010	**MAN7023**
1.3 D Multijet	199 A3.000	66	10/2009 →		90	12	063377022010	**MAN7022**
1.3 D Multijet	199 A3.000	66	10/2009 →	⊛	105	12	063377023010	**MAN7023**
1.3 D Multijet	199 A3.000	66	10/2009 →	⊛	70	12	063377024010	**MAN7024**
1.3 D Multijet	199 A3.000	66	10/2009 →	⊛	105	12	063377025010	**MAN7025**
1.3 D Multijet	199 B1.000	70	10/2009 →	⊛	105	12	063377025010	**MAN7025**
1.3 D Multijet	199 B1.000	70	10/2009 →	⊛	120	12	063377028010	**MAN7028**
1.3 D Multijet	199 B1.000	70	10/2009 →	◎	120	12	063377029010	**MAN7029**
1.4	350 A1.000	57	10/2009 →		70	12	063377006010	**MAN7006**
1.4	350 A1.000	57	10/2009 →	⊛	90	12	063377030010	**MAN7030**
1.4	350 A1.000	57	10/2009 →		105	12	063377031010	**MAN7031**
1.4 16V	955 A6.000	77	10/2009 →		90	12	063377030010	**MAN7030**
1.4 16V	955 A6.000	77	10/2009 →		105	12	063377031010	**MAN7031**
PUNTO Van (176L)								
1.1	176 B2.000	40	04/1996 → 02/2000		65	12	063321600010	**MAN640**
1.1	176 B2.000	40	05/1997 → 08/1999	⊛	75	12	063321604010	**MAN798**
1.7 D	176 B3.000	42	05/1997 → 08/1999		65	12	063321615010	**MAN807**
1.7 D	176 B3.000	42	04/1996 → 02/2000		65	12	063321616010	**MAN808**
1.7 TD	176 A5.000	52	04/1996 → 02/2000	⊛	85	12	063321332010	**MAN642**
1.7 TD	176 A5.000	52	05/1997 → 08/1999	⊛	65	12	063321615010	**MAN807**
1.7 TD	176 A5.000	52	04/1996 → 02/2000		65	12	063321616010	**MAN808**
1.7 TD	176 A5.000	52	04/1996 → 02/2000		120	12	063321854010	**MAN955**
PUNTO Van (188AX)								
1.2 60	188 A4.000	44	02/2000 →		65	12	063321600010	**MAN640**
1.2 60	188 A4.000	44	09/2000 →	⊛	90	12	063321715010	**MAN1039**
1.2 60	188 A4.000	44	04/2002 → 06/2003	⊛	70	12	063377001010	**MAN7001**
1.2 60	188 A4.000	44	02/2000 →	⊛	70	12	063377008010	**MAN7008**
1.2 60	188 A4.000	44	02/2000 →	⊛	105	12	063377009010	**MAN7009**
1.3 JTD	188 A9.000	51	07/2003 → 10/2005	⊛	90	12	063358061010	**MAN1097**
1.3 JTD	188 A9.000	51	07/2003 → 10/2005	⊛	75	12	063358062010	**MAN1098**
1.3 JTD	188 A9.000	51	07/2003 → 10/2005	⊛	140	12	063377005010	**MAN7005**
1.3 JTD	188 A9.000	51	06/2003 → 10/2005	⊛	105	12	063377494010	**MAN7494**
1.9 D 60	188 A3.000	44	02/2000 →		90	12	063321729010	**MAN1107**
1.9 JTD	188 A7.000	63	10/2001 →	⊛	90	12	063321729010	**MAN1107**
1.9 JTD	188 A7.000	63	10/2001 →	⊛	85	12	063321802010	**MAN1102**
1.9 JTD	188 A7.000	63	10/2001 →	⊛	105	12	063321826010	**MAN1127**
1.9 JTD	188 A7.000	63	10/2001 →	⊛	120	12	063321858010	**MAN1116**

		kW		i	A	V	LONG	SHORT
FIAT								
QUBO								
1.3 D Multijet	199 A2.000	55	09/2008 →	⊛	90	12	063358061010	**MAN1097**
1.3 D Multijet	199 A2.000	55	09/2008 →	⊛	75	12	063358062010	**MAN1098**
1.3 D Multijet		55	01/2009 →		120	12	063377028010	**MAN7028**
1.4	KFT, KFV	54	09/2008 →		75	12	063341734010	**MAN1166**
REGATA (138)								
100 Super 1.6	149 A2.000, 149 A4.000	74	10/1983 → 12/1988		55	12	063321011010	**MAN349**
100 Super 1.6	149 C3.000	70	10/1983 → 12/1988		55	12	063321011010	**MAN349**
100 Super 1.6	149 A2.000, 149 A4.000	74	10/1983 → 12/1984		65	12	063321152010	**MAN327**
60 Diesel 1.7	138 B6.000	43	09/1983 → 12/1986		55	12	063321011010	**MAN349**
60 Diesel 1.7	149 B3.000	44	05/1985 → 03/1989		55	12	063321011010	**MAN349**
60 Diesel 1.7	138 B6.000	43	09/1983 → 12/1985		55	12	063321112010	**MAN379**
65 Diesel 1.9	149 A1.000	48	04/1984 → 07/1989		55	12	063321011010	**MAN349**
65 Diesel 1.9	149 A1.000	48	04/1984 → 07/1989	⊛	65	12	063321017010	**MAN352**
70 1.3	138 B2.000	50	01/1986 → 07/1986		55	12	063321154010	**MAN344**
70 1.3	149 A3.000, 149 A7.000	48	09/1983 → 12/1985		55	12	063321154010	**MAN344**
75 1.5	138 B3.048, 138 C3.048	55	01/1984 → 12/1987		55	12	063321154010	**MAN344**
75 1.5	138 B3.048, 138 C3.048	55	04/1985 → 12/1987		65	12	063321157010	**MAN322**
75 i.e. 1.5	138 C2.048, 149 C1.000	55	01/1987 → 07/1989		55	12	063321154010	**MAN344**
75 i.e. 1.5	138 C2.048, 149 C1.000	55	10/1985 → 07/1989		65	12	063321157010	**MAN322**
80 Turbo Diesel 1.9	831 D1.000	59	05/1986 → 12/1987	⊛	65	12	063321017010	**MAN352**
85 1.5	149 A5.000	58	05/1985 → 12/1987		55	12	063321154010	**MAN344**
85 1.5	149 A5.000	58	05/1985 → 12/1987		65	12	063321157010	**MAN322**
85 1.6	149 A.000	60	01/1984 → 12/1987		55	12	063321011010	**MAN349**
85 Super 1.5	138 B3.000	60	01/1984 → 04/1985		55	12	063321154010	**MAN344**
85 Super 1.5	138 B3.000	60	09/1983 → 04/1985		65	12	063321157010	**MAN322**
90 i.e. 1.6	149 C2.000	66	01/1987 → 07/1989		55	12	063321011010	**MAN349**
REGATA Weekend								
100 1.6 (RF)	149 A4.000	74	09/1984 → 12/1986		55	12	063321011010	**MAN349**
100 i.e. 1.6	149 C3.000	74	01/1987 → 12/1988		55	12	063321011010	**MAN349**
60 Diesel 1.7	149 B3.000	44	01/1984 → 12/1989		55	12	063321011010	**MAN349**
60 Diesel 1.7	149 B3.000	44	01/1985 → 12/1989		55	12	063321112010	**MAN379**
65 Diesel 1.9	149 A1.000	48	04/1984 → 07/1989		55	12	063321011010	**MAN349**
65 Diesel 1.9	149 A1.000	48	04/1984 → 07/1989	⊛	65	12	063321017010	**MAN352**
70 1.3	138 B2.000	50	05/1986 → 07/1986		55	12	063321154010	**MAN344**
75 1.5	138 B3.048, 138 C3.048	55	01/1985 → 07/1989		55	12	063321154010	**MAN344**
75 1.5	138 B3.048, 138 C3.048	55	04/1985 → 07/1989		65	12	063321157010	**MAN322**
75 1.5 i.e. Cat.	138 C2.048	55	12/1986 → 04/1987		65	12	063321157010	**MAN322**
80 Turbo Diesel 1.9	831 D1.000	59	05/1986 → 12/1987	⊛	65	12	063321017010	**MAN352**
80 Turbo Diesel 1.9	831 D1.000	59	09/1986 → 06/1989		55	12	063321044010	**MAN286**
85 1.5	138 B3.000	60	01/1984 → 12/1987		55	12	063321154010	**MAN344**

		kW			A	V	LONG	SHORT
FIAT								
REGATA Weekend								
85 1.5	138 B3.000	60	01/1984 → 04/1989		65	12	063321157010	**MAN322**
90 i.e. 1.6	149 C2.000	66	01/1987 → 07/1989		55	12	063321011010	**MAN349**
RITMO Bertone Cabriolet								
50 1.3		50	10/1985 → 12/1987		55	12	063321154010	**MAN344**
85 1.5	138 A4.000	63	10/1982 → 04/1985		55	12	063321154010	**MAN344**
85 1.5	138 B3.000	60	03/1983 → 12/1985		55	12	063321154010	**MAN344**
RITMO I (138A)								
125 TC Abarth 2.0	138 AR1.000	92	11/1981 → 09/1982		55	12	063321011010	**MAN349**
55 Diesel 1.7	138 A5.000	40	10/1979 → 09/1982		55	12	063321011010	**MAN349**
55 Diesel 1.7	138 A5.000	43	10/1979 → 09/1982		55	12	063321011010	**MAN349**
60 1.0	127 A6.000	44	09/1978 → 09/1982		55	12	063321154010	**MAN344**
65 1.3	138 A1.000	48	01/1978 → 09/1982		55	12	063321154010	**MAN344**
65 1.3	138 A1.000	48	07/1978 → 09/1982		55	12	063321155010	**MAN320**
70 1.3	149 A3.000, 149 A7.000	48	11/1983 → 08/1985		55	12	063321154010	**MAN344**
75 1.3	138 A3.000	55	01/1981 → 09/1982		55	12	063321154010	**MAN344**
75 1.5	138 A2.000, 138 C3.048	55	01/1978 → 10/1982		55	12	063321154010	**MAN344**
75 i.e. 1.5	138 C2.048, 149 C1.000	55	10/1985 → 05/1987		65	12	063321157010	**MAN322**
85 1.5	138 A4.000	63	01/1981 → 09/1982		55	12	063321154010	**MAN344**
90 i.e. 1.6	149 C2.000	66	05/1987 → 12/1987		65	12	063321157010	**MAN322**
RITMO II (138A)								
100 1.6	149 A4.000	74	01/1985 → 12/1987		55	12	063321011010	**MAN349**
105 1.6	138 AR.000	77	01/1983 → 12/1987		55	12	063321011010	**MAN349**
105 1.6	138 AR.000	77	01/1983 → 12/1985		55	12	063321112010	**MAN379**
105 1.6	138 AR.000	77	01/1983 → 12/1985		65	12	063321152010	**MAN327**
125 TC Abarth 2.0	138 AR1.000	92	01/1985 → 12/1987		55	12	063321011010	**MAN349**
60 1.1	138 B.000, 138 B1.000, 138 C1.000	40	10/1982 → 10/1985		55	12	063321154010	**MAN344**
60 1.1	146 A4.048	43	04/1985 → 12/1987		55	12	063321154010	**MAN344**
60 Diesel 1.7	138 C.000, 149 B3.000	44	05/1985 → 12/1987		55	12	063321011010	**MAN349**
60 Diesel 1.7	138 B6.000	43	10/1982 → 10/1985		55	12	063321011010	**MAN349**
70 1.3	138 B2.000	50	01/1983 → 04/1985		55	12	063321154010	**MAN344**
75 1.5	138 A2.000	55	09/1985 → 12/1988		55	12	063321154010	**MAN344**
75 1.5 Cat.	138 C2.048, 149 C1.000	55	09/1985 → 12/1988		55	12	063321154010	**MAN344**
75 1.5 Cat.	138 C2.048, 149 C1.000	55	10/1985 → 12/1988		65	12	063321157010	**MAN322**
80 Turbo Diesel 1.9	831 D1.000	59	12/1985 → 12/1987		65	12	063321017010	**MAN352**
85 1.5	149 A5.000	58	08/1985 → 05/1987		55	12	063321154010	**MAN344**
85 1.5	138 B3.000	60	01/1983 → 12/1987		55	12	063321154010	**MAN344**
85 1.5	149 A5.000	58	08/1985 → 05/1987		65	12	063321157010	**MAN322**
85 1.5	138 B3.000	60	05/1985 → 12/1987		65	12	063321157010	**MAN322**
90 1.6 i.e.	138 AR.000	66	05/1987 → 12/1987		65	12	063321157010	**MAN322**

		kW			A	V	LONG	SHORT
FIAT								
SCUDO Combinato (220P)								
1.6	220 A 2.000	58	02/1996 →		75	12	063321620010	**MAN811**
SCUDO Furgonato (220L)								
1.6	220 A 2.000	58	02/1996 →		75	12	063321620010	**MAN811**
SEDICI								
1.9 D Multijet	D19AA	88	06/2006 →		140	12	063377005010	**MAN7005**
SEICENTO (187)								
0.9 (187AXA, 187AXA1A)	1170 A1.046	29	01/1998 →		55	12	063321165010	**MAN382**
1.1 (187AXB, 187AXB1A)	176 B2.000, 187 A1.000	40	01/1998 →		65	12	063321600010	**MAN640**
1.1 (187AXB, 187AXB1A)	176 B2.000, 187 A1.000	40	09/2000 →		90	12	063321760010	**MAN1125**
1.1 (187AXB, 187AXB1A)	176 B2.000, 187 A1.000	40	01/2001 → 12/2010		70	12	063377001010	**MAN7001**
SEICENTO Van (187)								
0.9 (187AXA)	1170 A1.046	29	01/1998 →		55	12	063321165010	**MAN382**
1.1 (187CXB/C)	176 B2.000	40	03/2000 →		65	12	063321173010	**MAN331**
SIENA (178_)								
1.2	178 B5.000	54	09/1998 →		65	12	063321173010	**MAN331**
1.2	178 C4.066, 188 A4.000	44	09/2001 → 12/2001		75	12	063321604010	**MAN798**
1.2	178 B5.000	54	01/2002 →		90	12	063321715010	**MAN1039**
1.2	178 C4.066, 188 A4.000	44	09/2001 →		70	12	063377008010	**MAN7008**
1.4	178 B2.000	51	04/1996 →		65	12	063321625010	**MAN645**
1.4 Cat.	178 B2.016	51	05/1998 → 06/2001		65	12	063321625010	**MAN645**
1.6 16V	178 B3.000	78	09/1998 →		65	12	063321173010	**MAN331**
1.6 16V	178 B3.000	78	09/1998 → 10/1999		85	12	063321340010	**MAN646**
1.6 16V	178 B3.000	78	09/1998 → 09/1999		75	12	063321606010	**MAN799**
1.6 16V	178 B3.000	78	09/1998 →		90	12	063533250580	**MAN2002**
SPIDEREUROPA (DS)								
2000	132 C3.031	77	03/1982 → 09/1985		55	12	063321011010	**MAN349**
2000	132 C3.031	76	04/1985 → 09/1985		55	12	063321011010	**MAN349**
STILO (192)								
1.2 16V (192_XA1B)	188 A5.000	59	02/2002 → 12/2003		75	12	063321763010	**MAN1171**
1.2 16V (192_XA1B)	188 A5.000	59	02/2002 →		90	12	063321919010	**MAN1159**
1.2 16V (192_XA1B)	188 A5.000	59	02/2002 →		105	12	063377009010	**MAN7009**
1.2 16V (192_XA1B)	188 A5.000	59	02/2002 →		90	12	063377010010	**MAN7010**
1.6 16V (192_XB1A)	182 B6.000	76	10/2001 → 12/2003		90	12	063533250580	**MAN2002**
1.6 16V (192_XB1A)	182 B6.000	76	10/2001 → 12/2003		110	12	063533250590	**MAN2040**
1.8 16V (192_XC1A)	192 A4.000	98	01/2002 →		120	12	063321858010	**MAN1116**
1.8 16V (192_XC1A)	192 A4.000	98	10/2001 →		110	12	063533250590	**MAN2040**
1.8 16V (192_XC1A)	192 A4.000	98	10/2001 → 12/2003		105	12	063534150120	**MAN2042**
1.9 D Multijet	192 A8.000	88	03/2006 →		105	12	063321826010	**MAN1127**
1.9 D Multijet	192 A8.000	88	09/2005 →		90	12	063377016010	**MAN7016**
1.9 D Multijet	192 A9.000	74	09/2005 →		90	12	063321729010	**MAN1107**
1.9 D Multijet	192 A9.000	74	09/2005 →		105	12	063321826010	**MAN1127**

		kW			A	V	LONG	SHORT
FIAT								
1.9 D Multijet	192 A9.000	74	09/2005 →		90	12	063377016010	**MAN7016**
1.9 D Multijet	937 A5.000	110	03/2006 →		120	12	063377004010	**MAN7004**
1.9 JTD	192 A5.000	103	01/2004 →		120	12	063377004010	**MAN7004**
1.9 JTD	192 B1.000	100	04/2004 →		120	12	063377004010	**MAN7004**
1.9 JTD	937 A4.000	93	01/2004 →		105	12	063321826010	**MAN1127**
1.9 JTD	937 A4.000	93	01/2004 →		120	12	063377004010	**MAN7004**
1.9 JTD (192_XE1A)	192 A1.000, 937 A7.000	85	10/2001 →		90	12	063321729010	**MAN1107**
1.9 JTD (192_XE1A)	192 A1.000, 937 A7.000	85	10/2001 →		105	12	063321826010	**MAN1127**
1.9 JTD (192_XE1A)	192 A1.000, 937 A7.000	85	10/2001 →		140	12	063321862010	**MAN1162**
1.9 JTD (192_XE1A)	192 A1.000, 937 A7.000	85	10/2001 →		90	12	063377016010	**MAN7016**
1.9 JTD (192_XF1A)	192 A3.000	59	02/2002 →		90	12	063321729010	**MAN1107**
1.9 JTD (192_XF1A)	192 A3.000	59	02/2002 →		105	12	063321826010	**MAN1127**
1.9 JTD (192_XF1A)	192 A3.000	59	02/2002 →		120	12	063321859010	**MAN1117**
1.9 JTD (192_XF1A)	192 A3.000	59	02/2002 →		140	12	063321862010	**MAN1162**
1.9 JTD (192_XF1A)	192 A3.000	59	02/2002 →		90	12	063377016010	**MAN7016**
1.9 JTD (192AXS1B, 192BXS1B)	192 B5.000	66	09/2004 →		90	12	063377016010	**MAN7016**
STILO Multi Wagon (192)								
1.6 16V	182 B6.000	76	01/2003 →		90	12	063533250580	**MAN2002**
1.6 16V	182 B6.000	76	01/2003 →		110	12	063533250590	**MAN2040**
1.8 16V	192 A4.000	98	01/2003 →		65	12	063321833010	**MAN1128**
1.8 16V	192 A4.000	98	01/2003 →		120	12	063321858010	**MAN1116**
1.8 16V	192 A4.000	98	01/2003 →		110	12	063533250590	**MAN2040**
1.8 16V	192 A4.000	98	01/2003 →		105	12	063534150120	**MAN2042**
1.9 D Multijet	192 A8.000	88	03/2006 →		105	12	063321826010	**MAN1127**
1.9 D Multijet	192 A9.000	74	09/2005 →		90	12	063321729010	**MAN1107**
1.9 D Multijet	192 A9.000	74	09/2005 →		105	12	063321826010	**MAN1127**
1.9 D Multijet	937 A5.000	110	03/2006 →		120	12	063377004010	**MAN7004**
1.9 JTD	192 A1.000	85	01/2003 →		90	12	063321819010	**MAN1110**
1.9 JTD	192 A1.000, 937 A7.000	85	01/2003 →		90	12	063321729010	**MAN1107**
1.9 JTD	192 A1.000, 937 A7.000	85	01/2004 →		105	12	063321826010	**MAN1127**
1.9 JTD	192 A1.000, 937 A7.000	85	01/2003 →		140	12	063321862010	**MAN1162**
1.9 JTD	192 A3.000	59	01/2003 →		90	12	063321729010	**MAN1107**
1.9 JTD	192 A3.000	59	01/2004 →		105	12	063321826010	**MAN1127**
1.9 JTD	192 A5.000	103	01/2004 →		105	12	063321826010	**MAN1127**
1.9 JTD	192 A5.000	103	01/2004 →		120	12	063377004010	**MAN7004**
1.9 JTD	192 B1.000	100	04/2004 →		105	12	063321826010	**MAN1127**
1.9 JTD	192 B1.000	100	04/2004 →		120	12	063377004010	**MAN7004**
1.9 JTD	937 A4.000	93	09/2004 →		105	12	063321826010	**MAN1127**
1.9 JTD	937 A4.000	93	01/2004 →		120	12	063377004010	**MAN7004**

		kW			A	V	LONG	SHORT
FIAT								
STRADA (178E)								
1.2	178 B5.000	54	06/1999 → 01/2005		65	12	063321173010	**MAN331**
1.2	178 B5.000	54	06/1999 →		65	12	063321600010	**MAN640**
1.2	178 B5.000	54	06/1999 → 03/2005	⊛	75	12	063321604010	**MAN798**
1.2	178 B5.000	54	06/1999 →		70	12	063377001010	**MAN7001**
1.2	178 B5.000	54	06/1999 →	⊛	70	12	063377008010	**MAN7008**
1.2	188 A4.000	44	04/2003 →		75	12	063321604010	**MAN798**
1.2	188 A4.000	44	04/2003 →		65	12	063321747010	**MAN1041**
1.2	188 A4.000	44	04/2003 →	⊛	70	12	063377008010	**MAN7008**
1.2 Trekking		60	11/2005 →	⊛	70	12	063377008010	**MAN7008**
1.3 D Multijet	223 A9.000	62	05/2006 →		90	12	063358061010	**MAN1097**
1.3 D Multijet	223 A9.000	62	05/2006 →		75	12	063358062010	**MAN1098**
1.3 D Multijet	223 A9.000	62	05/2006 →	⊛	105	12	063377494010	**MAN7494**
1.7 TD	176 A3.000	51	02/2000 →		85	12	063321332010	**MAN642**
1.7 TD	176 A3.000	51	06/1999 →		65	12	063321615010	**MAN807**
1.7 TD	176 A3.000	51	06/1999 →		120	12	063321854010	**MAN955**
1.9 D	223 A6.000	46	12/2000 →		90	12	063321729010	**MAN1107**
1.9 D	223 A6.000	46	12/2000 →		65	12	063321833010	**MAN1128**
1.9 D	223 A6.000	46	12/2000 →		120	12	063321859010	**MAN1117**
1.9 JTD	188 A2.000	59	04/2003 →		90	12	063321729010	**MAN1107**
1.9 JTD	188 A2.000	59	04/2003 →	⊛	65	12	063321833010	**MAN1128**
TALENTO Autobus (290)								
1.9 D (290UEHK)	149 B1.000	52	03/1989 → 03/1994		55	12	063321011010	**MAN349**
1.9 D (290UEHK)	149 B1.000	52	03/1989 → 12/1993		55	12	063321112010	**MAN379**
TALENTO Furgonato (290)								
1.9 D (290UK)	149 B1.000	52	03/1989 → 03/1994		55	12	063321011010	**MAN349**
1.9 D (290UK)	149 B1.000	52	03/1989 → 12/1993		55	12	063321112010	**MAN379**
TALENTO Pianale piatto/Telaio (290)								
1.9 D (290UAK, 290UTK)	149 B1.000	52	03/1989 → 03/1994		55	12	063321011010	**MAN349**
1.9 D (290UAK, 290UTK)	149 B1.000	52	03/1989 → 12/1993		55	12	063321112010	**MAN379**
TEMPRA (159)								
1.4 i.e. (159.AC)	159 A2.000	57	03/1991 → 08/1996		55	12	063321154010	**MAN344**
1.4 i.e. (159.AC)	159 A2.000	57	01/1993 → 08/1996		65	12	063321157010	**MAN322**
1.4 i.e. (159.AC, 159.AX)	160 A1.046, 836 A4.000	51	03/1992 → 08/1996		65	12	063321157010	**MAN322**
1.6	159 A3.000	63	03/1990 → 04/1993		55	12	063321154010	**MAN344**
1.6	159 A3.048	51	04/1990 → 06/1993		55	12	063321155010	**MAN320**
1.6	159 A3.000	63	04/1990 → 04/1993		65	12	063321156010	**MAN323**
1.6 i.e. (159.AE)	159 A3.046	57	06/1990 → 07/1992		55	12	063321154010	**MAN344**
1.6 i.e. (159.AE)	159 A3.046	57	06/1990 → 07/1992		65	12	063321156010	**MAN323**
1.6 i.e. (159.AJ)	159 B9.000	63	06/1994 → 08/1996		55	12	063321154010	**MAN344**
1.6 i.e. (159.AJ)	159 B9.000	66	06/1994 → 08/1996	⊛	65	12	063321156010	**MAN323**
1.6 i.e. (159.AJ)	159 B9.000	63	06/1994 → 08/1996		65	12	063321156010	**MAN323**
1.6 i.e. (159.AS, 159.AT)	159 A3.048, 835 C1.000	55	06/1992 → 08/1996		65	12	063321156010	**MAN323**
1.8 i.e. (159.AN)	159 A4.046	77	03/1992 → 12/1993		65	12	063321062010	**MAN298**

		kW			A	V	LONG	SHORT
FIAT								
TEMPRA (159)								
1.8 i.e. (159.AN)		81	03/1990 → 08/1996		65	12	063321087010	**MAN370**
1.8 i.e. (159.AN)		81	01/1991 → 08/1996		65	12	063321152010	**MAN327**
1.8 i.e. (159.AN)	159 A4.046	77	03/1992 → 08/1996		100	12	063321395010	**MAN782**
1.8 i.e. (159.AN)		81	03/1990 → 09/1992		100	12	063321395010	**MAN782**
1.8 i.e. (159.AV)	835 C2.000	76	09/1993 → 08/1996		65	12	063321062010	**MAN298**
1.8 i.e. (159.AV)	835 C2.000	76	09/1993 → 08/1996		100	12	063321395010	**MAN782**
1.8 i.e. (159.AZ)	835 C4.000	66	09/1993 → 08/1996		65	12	063321062010	**MAN298**
1.8 i.e. (159.AZ)	835 C4.000	66	09/1993 → 08/1996		100	12	063321395010	**MAN782**
1.8 i.e. (159.BY)	836 A5.000	74	01/1995 → 08/1996		65	12	063321062010	**MAN298**
1.9 D (159.AG)	149 A1.000, 160 A7.000	48	01/1992 → 08/1996		55	12	063321191010	**MAN330**
1.9 TD (159.AQ)	160 B6.046	59	07/1992 → 03/1993		55	12	063321191010	**MAN330**
1.9 TD (159.CU, 159.AU, 159.AI, 159.BI)	160 A6.000, 160 D1.000	66	05/1990 → 08/1996		55	12	063321191010	**MAN330**
2.0 i.e. (159.AP)	159 A6.046	83	01/1991 → 08/1996		65	12	063321062010	**MAN298**
2.0 i.e. (159.AP)	159 A6.046	83	10/1990 → 12/1991		65	12	063321087010	**MAN370**
2.0 i.e. (159.AP)	159 A6.046	83	10/1990 → 08/1996		100	12	063321395010	**MAN782**
TEMPRA S.W. (159)								
1.4 i.e. (159.AC)	159 A2.000	57	03/1991 → 08/1996		55	12	063321154010	**MAN344**
1.4 i.e. (159.AC)	159 A2.000	57	04/1991 → 06/1993		65	12	063321156010	**MAN323**
1.4 i.e. (159.AC)	159 A2.000	57	01/1993 → 08/1996		65	12	063321157010	**MAN322**
1.4 i.e. (159.AC, 159.AX)	160 A1.046, 836 A4.000	51	10/1992 → 12/1993		65	12	063321157010	**MAN322**
1.6	159 A3.000	63	12/1990 → 04/1993		55	12	063321154010	**MAN344**
1.6	159 A3.000	63	12/1990 → 04/1993		65	12	063321156010	**MAN323**
1.6 i.e. (159.AE)	159 A3.046, 835 C1.000	57	10/1990 → 08/1996		55	12	063321154010	**MAN344**
1.6 i.e. (159.AE)	159 A3.046, 835 C1.000	57	10/1990 → 08/1996		65	12	063321156010	**MAN323**
1.6 i.e. (159.AJ)	159 B9.000	66	06/1994 → 08/1996		65	12	063321156010	**MAN323**
1.6 i.e. (159.AS, 159.AT)	159 A3.048, 835 C1.000	55	10/1992 → 08/1996		65	12	063321156010	**MAN323**
1.8 4x4	159 A4.000	80	07/1992 → 06/1993		65	12	063321087010	**MAN370**
1.8 i.e. (159.AN)	159 A4.046	77	03/1992 → 12/1993		65	12	063321062010	**MAN298**
1.8 i.e. (159.AN)		81	03/1990 → 08/1996		65	12	063321087010	**MAN370**
1.8 i.e. (159.AN)		81	01/1993 → 08/1996		65	12	063321152010	**MAN327**
1.8 i.e. (159.AN)		81	12/1990 → 09/1992		100	12	063321395010	**MAN782**
1.8 i.e. (159.AN)	159 A4.046	77	03/1992 → 12/1993		100	12	063321395010	**MAN782**
1.8 i.e. (159.AV)	835 C2.000	76	09/1993 → 08/1996		65	12	063321062010	**MAN298**
1.8 i.e. (159.AV)	835 C2.000	76	09/1993 → 08/1996		100	12	063321395010	**MAN782**
1.8 i.e. (159.AZ)	835 C4.000	66	09/1993 → 08/1996		65	12	063321062010	**MAN298**
1.8 i.e. (159.AZ)	835 C4.000	66	09/1993 → 08/1996		100	12	063321395010	**MAN782**
1.8 i.e. (159.BY)	836 A5.000	74	01/1995 → 08/1996		65	12	063321062010	**MAN298**
1.9 D (159.AG)	149 A1.000, 160 A7.000	48	01/1992 → 08/1996		55	12	063321191010	**MAN330**
1.9 TD (159.AI, 159.BI, 159. CU, 159.AU)	160 A6.000, 160 D1.000	66	07/1991 → 02/1995		55	12	063321191010	**MAN330**
1.9 TD (159.AQ)	160 B6.046	59	03/1992 → 03/1993		55	12	063321191010	**MAN330**

		kW		i	A	V	MAGNETI MARELLI LONG	MAGNETI MARELLI SHORT
FIAT								
TEMPRA S.W. (159)								
2.0 i.e. (159.AP)	159 A6.046	83	01/1992 → 03/1995		65	12	063321062010	**MAN298**
2.0 i.e. (159.AP)	159 A6.046	83	01/1991 → 03/1995		100	12	063321395010	**MAN782**
2.0 i.e. 4x4 (159.AP)	159 A6.046	83	01/1993 → 03/1995		65	12	063321062010	**MAN298**
2.0 i.e. 4x4 (159.AP)	159 A6.046	83	03/1992 → 03/1995	⊛	100	12	063321395010	**MAN782**
TIPO (160)								
1.1 (160.AA)	160 A3.000	41	01/1988 → 10/1991		45	12	063321000010	**MAN342**
1.1 (160.AA)	160 A3.000	41	01/1988 → 10/1991		55	12	063321067010	**MAN300**
1.4 (160.AC)	160 A1.000, 160 A1.048	52	07/1987 → 12/1989		55	12	063321154010	**MAN344**
1.4 (160.AC)	160 A1.000, 160 A1.048	52	07/1987 → 12/1989		55	12	063321155010	**MAN320**
1.4 i.e.	159 A2.000	57	01/1990 → 03/1993		55	12	063321154010	**MAN344**
1.4 i.e.	159 A2.000	57	05/1989 → 04/1995		55	12	063321155010	**MAN320**
1.4 i.e.	159 A2.000	57	01/1990 → 03/1993		65	12	063321157010	**MAN322**
1.4 i.e. (160.AP, 160.AD, 160.EA)	160 A1.046, 836 A4.000	51	05/1989 → 04/1995		55	12	063321155010	**MAN320**
1.4 i.e. (160.AP, 160.AD, 160.EA)	160 A1.046, 836 A4.000	51	01/1993 → 04/1995		65	12	063321157010	**MAN322**
1.6 (160.AE)	160 A2.000	61	01/1988 → 10/1991		55	12	063321154010	**MAN344**
1.6 (160.AE)	160 A2.000	61	01/1990 → 10/1991		55	12	063321155010	**MAN320**
1.6 (160.AE)	160 A2.000	61	01/1988 → 12/1990		65	12	063321157010	**MAN322**
1.6 i.e.	149 C2.046	66	02/1988 → 05/1991		65	12	063321156010	**MAN323**
1.6 i.e.	149 C2.046	66	01/1989 → 05/1991		65	12	063321157010	**MAN322**
1.6 i.e.	149 C2.046	66	02/1988 → 06/1990	⊛	100	12	063321395010	**MAN782**
1.6 i.e. (160.A1, 160.EC, 160.EB)	159 A3.048, 835 C1.000	55	10/1992 → 12/1993		65	12	063321157010	**MAN322**
1.6 i.e. (160.AF)	159 A3.046	57	07/1990 → 01/1993		65	12	063321157010	**MAN322**
1.7 D (160.AG)		45	01/1988 → 12/1989		55	12	063321011010	**MAN349**
1.7 D (160.AG)		45	01/1988 → 10/1995		65	12	063321087010	**MAN370**
1.7 D (160.AG)	149 B4.000	43	01/1988 → 10/1994		65	12	063321087010	**MAN370**
1.7 D (160.AG)	149 B4.000	43	01/1988 → 12/1989		55	12	063321112010	**MAN379**
1.7 D (160.AG)		45	01/1992 → 10/1995	⊛	55	12	063321191010	**MAN330**
1.8 i.e.	159 A4.000	81	01/1991 → 06/1993		65	12	063321152010	**MAN327**
1.8 i.e.	159 A4.000	81	01/1991 → 06/1993		100	12	063321395010	**MAN782**
1.8 i.e.	835 C4.000	66	09/1993 → 04/1995		65	12	063321152010	**MAN327**
1.8 i.e.	835 C4.000	66	09/1993 → 04/1995	⊛	100	12	063321395010	**MAN782**
1.8 i.e	836 A5.000	71	03/1993 → 04/1995	⊛	100	12	063321395010	**MAN782**
1.8 i.e. (160.AM)	159 A4.000	74	10/1994 → 04/1995		65	12	063321152010	**MAN327**
1.8 i.e. (160.AM)	159 A4.000	74	10/1994 → 04/1995		100	12	063321395010	**MAN782**
1.8 i.e. (160.AY)	159 A4.046	77	01/1992 → 06/1993		65	12	063321062010	**MAN298**
1.8 i.e. (160.AY)	159 A4.046	77	01/1991 → 06/1993	⊛	100	12	063321395010	**MAN782**
1.8 i.e. (160.ED)	835 C2.000	76	04/1993 → 04/1995		65	12	063321152010	**MAN327**
1.8 i.e. (160.ED)	835 C2.000	76	04/1993 → 04/1995	⊛	100	12	063321395010	**MAN782**
1.8 i.e.16V Sport	160 A5.000	100	04/1990 → 06/1992		65	12	063321152010	**MAN327**
1.9 D	149 A1.000, 160 A7.000	48	01/1992 → 08/1996		55	12	063321191010	**MAN330**
1.9 TD (160.AW)	160 B6.046	59	03/1992 → 03/1993	⊛	55	12	063321191010	**MAN330**

		kW			A	V	LONG	SHORT
FIAT								
TIPO (160)								
1.9 TD (160.EL, 160.GL, 160.AQ, 160.EI, 160.AR)	160 A6.000, 160 A6.046, 160 D1.000	66	09/1990 → 04/1995		55	12	063321191010	**MAN330**
2.0 16V (160.AV)	160 A8.046	107	07/1991 → 12/1993	⊛	65	12	063321017010	**MAN352**
2.0 16V (160.AV)	160 A8.046	107	07/1991 → 12/1993	⊛	100	12	063321395010	**MAN782**
2.0 i.e. (160.AJ)	159 A5.046	80	06/1990 → 03/1992		65	12	063321062010	**MAN298**
2.0 i.e. (160.AJ)	159 A5.046	80	06/1990 → 12/1991		65	12	063321087010	**MAN370**
2.0 i.e. (160.AJ)	159 A5.046	80	06/1990 → 03/1992		100	12	063321395010	**MAN782**
2.0 i.e. (160.AT, 160.AJ)	159 A6.046	83	03/1990 → 12/1992		65	12	063321062010	**MAN298**
2.0 i.e. (160.AT, 160.AJ)	159 A6.046	83	03/1990 → 12/1991		65	12	063321087010	**MAN370**
2.0 i.e. (160.AT, 160.AJ)	159 A6.046	83	03/1990 → 04/1995	⊛	100	12	063321395010	**MAN782**
2.0 i.e. 16V Sport (160.EF)	836 A3.000	102	03/1993 → 04/1995		65	12	063321017010	**MAN352**
2.0 i.e. 16V Sport (160.EF)	836 A3.000	102	03/1993 → 04/1995	⊛	100	12	063321395010	**MAN782**
ULYSSE (179AX)								
2.0	RFN(EW10J4)	100	10/2002 → 10/2005		90	12	063321734010	**MAN963**
2.0	RFN(EW10J4)	100	08/2002 →		75	12	063341734010	**MAN1166**
UNO (146A/E)								
1.0	156 A2.000	31	06/1989 → 02/1992		65	12	063321021010	**MAN354**
1.3 Turbo i.e.	146 A2.000	77	04/1985 → 08/1989		65	12	063321157010	**MAN322**
1.3 Turbo i.e.	146 A2.146	73	10/1987 → 12/1987		65	12	063321157010	**MAN322**
1.3 Turbo i.e.	146 A2.246	74	09/1989 → 03/1991		55	12	063321044010	**MAN286**
1.3 Turbo i.e.	146 A2.246	74	09/1989 → 03/1991		65	12	063321157010	**MAN322**
1.4	160 A1.046	51	07/1991 → 07/1996		55	12	063321044010	**MAN286**
1.4	160 A1.046	51	07/1991 → 03/1994		65	12	063321157010	**MAN322**
1.9 D	149 B5.046	44	09/1989 → 03/1994		55	12	063321112010	**MAN379**
45 0.9	146 A.000, 146 A.1000	33	03/1983 → 09/1992		55	12	063321067010	**MAN300**
45 1.0 (146A.ED)		37	06/1986 → 08/1989		45	12	063321000010	**MAN342**
45 1.0 (146A.ED)	156 A2.048, 156 A2.100	32	06/1986 → 12/1993		45	12	063321000010	**MAN342**
45 1.0 (146A.ED)		37	06/1986 → 12/1993		55	12	063321067010	**MAN300**
45 1.0 (146A.ED)	156 A2.048, 156 A2.100	32	06/1986 → 12/1993		55	12	063321067010	**MAN300**
45 1.0 (146A.ED)		37	06/1986 → 08/1989		65	12	063321173010	**MAN331**
45 1.0 (146A.ED)	156 A2.048, 156 A2.100	32	06/1986 → 12/1988		65	12	063321173010	**MAN331**
45 i.e. 1.0	156 A2.246	33	01/1987 → 12/1994		45	12	063321000010	**MAN342**
45 i.e. 1.0	156 A2.246	33	04/1984 → 12/1994		55	12	063321067010	**MAN300**
45 i.e. 1.0	156 A2.246	33	10/1984 → 12/1988		65	12	063321173010	**MAN331**
45 i.e. 1.0	156 A2.246	33	10/1984 → 12/1988		55	12	063341454010	**MAN1014**
50 1.1	146 A4.044	37	01/1986 → 12/1989		65	12	063321021010	**MAN354**
50 1.1	156 C.046	37	01/1990 → 12/1993		45	12	063321000010	**MAN342**
50 1.1	156 C.046	37	01/1990 → 12/1993		65	12	063321021010	**MAN354**
50 1.1	156 C.046	37	01/1990 → 12/1993		55	12	063321067010	**MAN300**
50 i.e. 1.1	146 C3.000	36	06/1992 → 12/1993		45	12	063321000010	**MAN342**
50 i.e. 1.1	146 C3.000	36	06/1992 → 12/1993		55	12	063321067010	**MAN300**
55 1.1	138 B.000	40	01/1983 → 08/1989		55	12	063321154010	**MAN344**

		kW		i	A	V	LONG	SHORT
FIAT								
UNO (146A/E)								
60 1.1	160 A3.000	42	04/1989 → 12/1992		45	12	063321000010	**MAN342**
60 1.1	160 A3.000	42	04/1989 → 12/1992		55	12	063321154010	**MAN344**
60 1.1 (146A.EG)	146 A4.048	43	05/1985 → 08/1989		55	12	063321154010	**MAN344**
60 Diesel 1.7	146 B2.000	42	09/1989 → 12/1993		55	12	063321112010	**MAN379**
60 Diesel 1.7	149 B3.000	44	07/1986 → 08/1989		55	12	063321011010	**MAN349**
70 1.3	138 B2.000	50	01/1983 → 04/1985		55	12	063321154010	**MAN344**
70 1.3	149 A7.000	48	05/1985 → 08/1989		55	12	063321154010	**MAN344**
70 i.e. 1.4	146 C1.000	53	09/1989 → 12/1992		55	12	063321154010	**MAN344**
70 i.e. 1.4	146 C1.000	53	05/1991 → 09/1992		65	12	063321157010	**MAN322**
70 i.e. 1.4	160 A1.046	51	09/1989 → 12/1993		55	12	063321154010	**MAN344**
70 i.e. 1.4	160 A1.046	51	05/1991 → 12/1993		65	12	063321157010	**MAN322**
70 TD 1.4	146 B.000, 146 B3.000	52	10/1986 → 12/1989		55	12	063321011010	**MAN349**
70 TD 1.4	146 B.000, 146 B3.000	52	01/1989 → 10/1990		55	12	063321112010	**MAN379**
75 i.e. 1.5	138 C2.048, 149 C1.000	55	01/1989 → 12/1993		55	12	063321154010	**MAN344**
X 1/9 (128 AS)								
1.5 Five Speed	138 AS.000	63	11/1978 → 12/1989		55	12	063321154010	**MAN344**
1.5 Five Speed	138 BS.031	56	06/1985 → 12/1989		55	12	063321154010	**MAN344**
FORD								
CAPRI (ECJ)								
1600	OHC TL 16 H	53	08/1972 → 02/1974		55	12	054022384010	**MAN653**
1600	LE	65	08/1972 → 12/1973		55	12	054022384010	**MAN653**
1600	LE	65	08/1972 → 12/1973		45	12	063324199010	**MAN107**
1600	OHC TL 16 H	53	08/1972 → 12/1973		45	12	063324199010	**MAN107**
1600 GT		60	01/1969 → 10/1972		55	12	054022384010	**MAN653**
1600 GT		60	01/1969 → 10/1972		45	12	063324199010	**MAN107**
1700	TV 17 H	55	12/1968 → 08/1972		55	12	054022384010	**MAN653**
1700	TV 17 H	55	12/1968 → 08/1972		45	12	063324199010	**MAN107**
2000		63	02/1969 → 06/1971		55	12	054022384010	**MAN653**
2000		66	02/1969 → 12/1972		55	12	054022384010	**MAN653**
2000		66	04/1969 → 08/1972		45	12	063324199010	**MAN107**
2000		63	04/1969 → 08/1970		45	12	063324199010	**MAN107**
2300		92	08/1969 → 12/1970		55	12	054022384010	**MAN653**
2300	TV 23 H	79	02/1969 → 02/1974		55	12	054022384010	**MAN653**
2300	TV 23 H	79	04/1969 → 12/1973		45	12	063324199010	**MAN107**
2300		92	10/1969 → 08/1970		45	12	063324199010	**MAN107**
2600	UY	92	08/1970 → 12/1973		55	12	054022384010	**MAN653**
2600	UY	92	09/1970 → 12/1973		45	12	063324199010	**MAN107**
CAPRI II (GECP)								
1.3	J1E	40	02/1974 → 08/1977		55	12	054022384010	**MAN653**
1.3	J1E	42	01/1976 → 08/1977		55	12	063321154010	**MAN344**
1.3	J1E	40	01/1976 → 08/1977		55	12	063321154010	**MAN344**
1.3	J1E	42	06/1976 → 08/1977		45	12	063324199010	**MAN107**
1.3	J1E	40	06/1976 → 08/1977		45	12	063324199010	**MAN107**

		kW			A	V	LONG	SHORT
1.6	LEC	65	02/1974 → 12/1977		55	12	054022384010	**MAN653**
1.6	LCE	53	02/1974 → 12/1977		55	12	054022384010	**MAN653**
1.6	LAC	50	09/1974 → 12/1977		55	12	054022384010	**MAN653**
2.0	NWN, NYL	66	04/1976 → 12/1977		55	12	054022384010	**MAN653**
2.0	OHC TL 20 H	72	04/1974 → 12/1977		55	12	054022384010	**MAN653**
2.0	NWN, NYL	66	04/1976 → 12/1977		45	12	063324199010	**MAN107**
2.3	YYE	79	02/1974 → 12/1977		55	12	054022384010	**MAN653**
2.3	YYE	79	02/1974 → 12/1977		45	12	063324199010	**MAN107**
3.0	HYF	101	02/1974 → 12/1977		55	12	054022384010	**MAN653**
3.0		101	02/1974 → 12/1977		55	12	054022384010	**MAN653**
CAPRI III (GECP)								
1.3	J1E	40	01/1978 → 06/1985		55	12	054022384010	**MAN653**
1.6	LCN	54	02/1979 → 04/1987		55	12	063324145010	**MAN100**
2.0	NYL	66	06/1979 → 12/1982		55	12	054022384010	**MAN653**
2.0	NEN, OHC TL 20 H	74	01/1978 → 12/1985		55	12	054022384010	**MAN653**
2.0	NYL	66	06/1979 → 12/1982		45	12	063324199010	**MAN107**
2.3 Super	YYN	84	06/1979 → 12/1985		55	12	054022384010	**MAN653**
2.3 Super	YYN	84	06/1979 → 12/1985		45	12	063324199010	**MAN107**
2.8 Super Injection	PRN	118	01/1981 → 04/1987		55	12	054022384010	**MAN653**
3.0		101	01/1978 → 12/1981		55	12	054022384010	**MAN653**
C-MAX								
1.8 TDCi	KKDA	85	02/2007 →		105	12	063377443010	**MAN7443**
ESCORT '81 Express (AVA)								
1.1	GLB	37	03/1981 → 12/1985		55	12	054022384010	**MAN653**
1.1	GLB	37	01/1982 → 05/1983		45	12	063324199010	**MAN107**
1.3	JPA	51	03/1981 → 12/1985		55	12	054022384010	**MAN653**
1.6 D	LTA	40	02/1984 → 02/1986		55	12	054022581010	**MAN649**
1.6 D	LTA	40	04/1984 → 02/1986		55	12	063324145010	**MAN100**
1.6 D	LTA	40	02/1984 → 12/1985		55	12	063534892520	**MAN2035**
ESCORT '86 Express (AVF)								
1.1	GSG	37	05/1986 → 12/1988		55	12	054022384010	**MAN653**
1.1	GSG	37	05/1986 → 07/1990		55	12	054022581010	**MAN649**
1.3	JBA	46	07/1988 → 07/1990		55	12	054022384010	**MAN653**
1.3	JBB, JLA, JLB	44	02/1986 → 07/1990		55	12	054022384010	**MAN653**
1.3	JBB, JLA, JLB	44	02/1986 → 12/1988		55	12	054022581010	**MAN649**
1.3	JBA	46	07/1988 → 12/1988		55	12	054022581010	**MAN649**
1.4 i	F6B, F6D, FUC	54	02/1986 → 07/1990		55	12	054022384010	**MAN653**
1.4 i	F6B, F6D, FUC	54	02/1986 → 07/1990		70	12	054022604010	**MAN662**
1.6 D	LTA	40	02/1986 → 12/1989		55	12	054022581010	**MAN649**
1.6 D	LTA	40	02/1986 → 12/1988		55	12	063534892520	**MAN2035**
1.8 D	RTA, RTB	44	01/1989 → 07/1990		70	12	054022585010	**MAN652**
1.8 D	RTA, RTB	44	01/1989 → 07/1990		55	12	054022598010	**MAN666**
1.8 D	RTA, RTB	44	07/1988 → 07/1990		75	12	063532614010	**MAN2614**
ESCORT '91 Express (AVL)								
1.3	JBD	46	01/1991 → 12/1994		55	12	054022384010	**MAN653**
1.3	JBD	46	07/1990 → 12/1994		70	12	054022604010	**MAN662**

		kW		i	A	V	LONG	SHORT
FORD								
ESCORT '91 Express (AVL)								
1.4	F6F, F6G	52	07/1990 → 12/1994		55	12	054022384010	**MAN653**
1.4	F6F, F6G	52	01/1991 → 12/1994		55	12	054022581010	**MAN649**
1.4	F6F, F6G	52	07/1990 → 12/1994		70	12	054022604010	**MAN662**
1.8 D	RTH	44	07/1990 → 12/1994		55	12	054022598010	**MAN666**
1.8 D	RTH	44	09/1990 → 08/1994		75	12	063341695010	**MAN833**
1.8 D	RTH	44	07/1990 → 12/1994		75	12	063532614010	**MAN2614**
ESCORT '95 Furgonato (AVL)								
1.4	F4B	54	01/1995 →		55	12	054022384010	**MAN653**
1.4	F4B	54	01/1995 → 09/2001		70	12	063533100530	**MAN2021**
1.8 D	RTF, RTH	44	01/1995 → 09/2001		55	12	054022598010	**MAN666**
1.8 D	RTF, RTH	44	01/1995 →	⎈	75	12	063341695010	**MAN833**
1.8 D	RTF, RTH	44	01/1995 →		75	12	063532614010	**MAN2614**
1.8 Turbo D	RVA	51	12/1995 → 06/2001		55	12	054022598010	**MAN666**
1.8 Turbo D	RVA	51	12/1995 → 06/2001	⎈	70	12	063341730010	**MAN938**
1.8 Turbo D	RVA	51	12/1995 → 06/2001		75	12	063532614010	**MAN2614**
ESCORT CLASSIC (AAL, ABL)								
1.6 16V	L1E	66	10/1998 → 07/2000		70	12	063533100530	**MAN2021**
1.8 TD	RFD, RFK	66	10/1998 → 07/2000		55	12	054022598010	**MAN666**
1.8 TD	RFD, RFK	66	10/1998 → 07/2000	⎈	70	12	063341730010	**MAN938**
1.8 TD	RFD, RFK	66	10/1998 → 07/2000		75	12	063532614010	**MAN2614**
ESCORT CLASSIC Turnier (ANL)								
1.6 16V	L1E	66	02/1999 → 07/2000		70	12	063533100530	**MAN2021**
1.8 TD	RFD, RFK	66	02/1999 → 07/2000		55	12	054022598010	**MAN666**
1.8 TD	RFD, RFK	66	02/1999 → 07/2000	⎈	70	12	063341730010	**MAN938**
1.8 TD	RFD, RFK	66	02/1999 → 07/2000		75	12	063532614010	**MAN2614**
ESCORT II (ATH)								
1.1	G1	34	06/1975 → 12/1976		55	12	054022384010	**MAN653**
1.1	G2	35	01/1975 → 10/1976		55	12	054022384010	**MAN653**
1.1	G1	32	01/1975 → 10/1976		55	12	054022384010	**MAN653**
1.3	J1F	40	01/1975 → 10/1976		55	12	054022384010	**MAN653**
1.3	J3	51	01/1977 → 08/1980		55	12	054022384010	**MAN653**
1.3	J2	42	01/1975 → 10/1976		55	12	054022384010	**MAN653**
1.6 RS	LC	62	01/1975 → 10/1976		55	12	054022384010	**MAN653**
2.0 RS Trazione posteriore	NE	80	06/1976 → 08/1980		55	12	063324145010	**MAN100**
ESCORT II Station wagon								
1.1		32	04/1975 → 12/1976		55	12	054022384010	**MAN653**
1.1		35	04/1975 → 12/1976		55	12	054022384010	**MAN653**
1.3	J2	42	04/1975 → 12/1976		55	12	054022384010	**MAN653**
1.3 (BADR)		40	08/1976 → 10/1976		55	12	054022384010	**MAN653**
1.3 (CADR)	KL 13 H	40	04/1975 → 12/1976		55	12	054022384010	**MAN653**
ESCORT III (GAA)								
1.1	GLB, GMA	40	09/1980 → 08/1983		55	12	054022384010	**MAN653**
1.1	GSE	37	08/1983 → 12/1985		55	12	054022384010	**MAN653**
1.3	JPA	51	01/1982 → 05/1983		55	12	054022384010	**MAN653**

		kW		i	A	V	MAGNETI MARELLI LONG	MAGNETI MARELLI SHORT
FORD								
ESCORT III (GAA)								
1.6	LP1, LPA	58	01/1982 → 05/1983		55	12	054022384010	**MAN653**
1.6	LUA	71	09/1980 → 10/1982		55	12	054022384010	**MAN653**
1.6	CHT 1600	48	05/1983 → 07/1986		55	12	054022581010	**MAN649**
1.6 D	LTA	40	02/1984 → 12/1985		55	12	054022581010	**MAN649**
1.6 D	LTA	40	04/1984 → 12/1985		55	12	063324145010	**MAN100**
1.6 D	LTA	40	02/1984 → 12/1985		55	12	063534892520	**MAN2035**
1.6 i (GAA)	L4B	66	07/1985 → 12/1985		55	12	054022384010	**MAN653**
1.6 i (GAA)	L4B	66	07/1985 → 12/1985		55	12	054022581010	**MAN649**
1.6 RS Turbo	LNA	97	11/1984 → 12/1985		55	12	054022384010	**MAN653**
1.6 XR3i	LR1, LRA	77	10/1982 → 12/1985		55	12	054022384010	**MAN653**
RS 1600i		85	05/1982 → 12/1985		55	12	054022384010	**MAN653**
RS 1600i		85	05/1982 → 03/1983		45	12	063324199010	**MAN107**
ESCORT III Cabriolet (ALD)								
1.6	LP1, LPA	58	09/1983 → 12/1985		55	12	054022581010	**MAN649**
1.6 i	LR1, LRA	77	09/1983 → 12/1985		55	12	054022581010	**MAN649**
ESCORT III Station wagon (AWA)								
1.3	JPA	51	01/1982 → 12/1985		55	12	054022581010	**MAN649**
1.6	LP1, LPA	58	01/1982 → 12/1985		55	12	054022581010	**MAN649**
1.6 D	LTA	40	02/1984 → 12/1985		55	12	054022581010	**MAN649**
1.6 D	LTA	40	02/1984 → 12/1985		55	12	063534892520	**MAN2035**
ESCORT IV (GAF, AWF, ABFT)								
1.1	GSG	37	01/1987 → 07/1990		55	12	054022384010	**MAN653**
1.1	GSG	37	01/1986 → 07/1990		55	12	054022581010	**MAN649**
1.3	JBB, JLA, JLB	44	01/1986 → 12/1988		55	12	054022384010	**MAN653**
1.3		51	11/1986 → 07/1988		55	12	054022384010	**MAN653**
1.3 (GAF)	JBA	46	07/1988 → 10/1990		55	12	054022384010	**MAN653**
1.4	F6B, F6D, FUC	54	01/1987 → 07/1990		55	12	054022384010	**MAN653**
1.4	FUA	55	01/1986 → 12/1988		55	12	054022384010	**MAN653**
1.4	FUA	55	01/1986 → 07/1990		55	12	054022581010	**MAN649**
1.4	FUAA	51	01/1986 → 10/1990		55	12	054022581010	**MAN649**
1.4	F6B, F6D, FUC	54	01/1987 → 07/1990		70	12	054022604010	**MAN662**
1.4	FUAA	51	01/1986 → 10/1990		70	12	054022604010	**MAN662**
1.4	FUA	55	01/1986 → 07/1990		70	12	054022604010	**MAN662**
1.6	LUG	65	04/1989 → 07/1990		55	12	054022384010	**MAN653**
1.6	LP2	58	01/1986 → 12/1988		55	12	054022384010	**MAN653**
1.6	LP2	58	01/1986 → 12/1988		70	12	054022604010	**MAN662**
1.6	LUG	65	04/1989 → 07/1990		70	12	054022604010	**MAN662**
1.6 D	LTC	40	01/1986 → 12/1988		55	12	054022581010	**MAN649**
1.6 D	LTC	40	01/1986 → 01/1989		55	12	054022598010	**MAN666**
1.6 D	LTC	40	01/1986 → 12/1988		55	12	063534892520	**MAN2035**

		kW		i	A	V	LONG	SHORT
FORD								
ESCORT IV (GAF, AWF, ABFT)								
1.6 i	LJB	75	08/1989 → 07/1990		55	12	054022384010	**MAN653**
1.6 i	L4B	66	01/1986 → 12/1988		55	12	054022384010	**MAN653**
1.6 i	L4B	66	01/1986 → 05/1990		70	12	054022604010	**MAN662**
1.6 i	LJB	75	08/1989 → 07/1990		70	12	054022604010	**MAN662**
1.6 Turbo RS	LNB	97	01/1986 → 12/1988		55	12	054022384010	**MAN653**
1.6 Turbo RS	LNB	97	01/1986 → 07/1990		55	12	054022581010	**MAN649**
1.6 Turbo RS	LNB	97	01/1986 → 07/1990		70	12	054022604010	**MAN662**
1.6 XR3i	LR2, LRB	77	01/1986 → 08/1989		55	12	054022384010	**MAN653**
1.6 XR3i	LR2, LRB	77	01/1986 → 08/1989		55	12	054022581010	**MAN649**
1.6 XR3i	LR2, LRB	77	01/1986 → 08/1989		70	12	054022604010	**MAN662**
1.6 XR3i	LR2, LRB	77	01/1986 → 08/1989		55	12	063324145010	**MAN100**
1.8 D	RTA, RTB	44	01/1989 → 07/1990		70	12	054022585010	**MAN652**
1.8 D	RTA, RTB	44	01/1989 → 07/1990		55	12	054022598010	**MAN666**
1.8 D	RTA, RTB	44	01/1989 → 07/1990		75	12	063532614010	**MAN2614**
ESCORT IV Cabriolet (ALF)								
1.4	F6B, F6D, FUC	54	02/1987 → 07/1990		55	12	054022384010	**MAN653**
1.4	FUA	55	01/1986 → 12/1988		55	12	054022384010	**MAN653**
1.4	FUA	55	01/1986 → 07/1990		55	12	054022581010	**MAN649**
1.4	FUA	55	01/1986 → 07/1990		70	12	054022604010	**MAN662**
1.4	F6B, F6D, FUC	54	02/1987 → 07/1990		70	12	054022604010	**MAN662**
1.6	LP2	58	01/1986 → 12/1987		55	12	054022384010	**MAN653**
1.6	LP2	58	01/1986 → 12/1987		70	12	054022604010	**MAN662**
1.6 i	LJB	75	08/1989 → 07/1990		55	12	054022384010	**MAN653**
1.6 i	L4B	66	01/1986 → 12/1988		55	12	054022384010	**MAN653**
1.6 i	LJB	75	08/1989 → 07/1990		70	12	054022604010	**MAN662**
1.6 i	L4B	66	01/1986 → 07/1990		70	12	054022604010	**MAN662**
1.6 XR3i	LR2, LRB	77	01/1986 → 08/1989		55	12	054022384010	**MAN653**
1.6 XR3i	LR2, LRB	77	01/1986 → 08/1989		70	12	054022604010	**MAN662**
1.6 XR3i	LR2, LRB	77	01/1986 → 07/1990		55	12	063324145010	**MAN100**
ESCORT IV Station wagon (AWF, AVF)								
1.1	GSG	37	01/1987 → 09/1990		55	12	054022384010	**MAN653**
1.3		51	11/1986 → 07/1988		55	12	054022384010	**MAN653**
1.3	JBB, JLA, JLB	44	01/1986 → 12/1988		55	12	054022384010	**MAN653**
1.4	FUA	55	01/1986 → 12/1988		55	12	054022384010	**MAN653**
1.4	FUAA	51	01/1986 → 07/1990		55	12	054022384010	**MAN653**
1.4	F6B, F6D, FUC	54	01/1987 → 07/1990		55	12	054022384010	**MAN653**
1.4	FUAA	51	01/1986 → 10/1990		70	12	054022604010	**MAN662**
1.4	F6B, F6D, FUC	54	01/1987 → 07/1990		70	12	054022604010	**MAN662**
1.4	FUA	55	01/1986 → 07/1990		70	12	054022604010	**MAN662**
1.6	LP2	58	01/1986 → 12/1988		55	12	054022384010	**MAN653**
1.6	LP2	58	01/1986 → 07/1990		70	12	054022604010	**MAN662**
1.6 D	LTC	40	01/1986 → 12/1988		55	12	054022581010	**MAN649**

		kW		i	A	V	MAGNETI MARELLI LONG	MAGNETI MARELLI SHORT
FORD								
ESCORT IV Station wagon (AWF, AVF)								
1.6 D	LTC	40	01/1986 → 01/1989		55	12	054022598010	**MAN666**
1.6 D	LTC	40	01/1986 → 01/1989		55	12	063324145010	**MAN100**
1.6 D	LTC	40	01/1986 → 12/1988		55	12	063534892520	**MAN2035**
1.6 i	L4B	66	01/1986 → 12/1988		55	12	054022384010	**MAN653**
1.6 i	L4B	66	01/1986 → 07/1990		70	12	054022604010	**MAN662**
1.8 D	RTA, RTB	44	01/1989 → 07/1990		70	12	054022585010	**MAN652**
1.8 D	RTA, RTB	44	01/1989 → 07/1990		55	12	054022598010	**MAN666**
1.8 D	RTA, RTB	44	01/1989 → 07/1990		75	12	063532614010	**MAN2614**
ESCORT V (GAL)								
1.3	J4B, J6A	44	07/1990 → 09/1992		55	12	054022581010	**MAN649**
1.3	J4B, J6A	44	05/1991 → 09/1992		70	12	054022604010	**MAN662**
1.4	F6F, F6G	52	08/1990 → 09/1992		70	12	054022604010	**MAN662**
1.6	LUJ, LUK	66	07/1990 → 08/1992		55	12	054022384010	**MAN653**
1.6	LUJ, LUK	66	07/1990 → 08/1992		70	12	054022604010	**MAN662**
1.6	LJF	77	08/1990 → 09/1992		70	12	054022604010	**MAN662**
1.8 D	RTE, RTF, RTH	44	08/1990 → 12/1992		55	12	054022598010	**MAN666**
1.8 D	RTE, RTF, RTH	44	07/1990 → 12/1992		75	12	063532614010	**MAN2614**
1.8 D	RTE, RTF, RTH	44	07/1990 → 12/1992		55	12	063534892520	**MAN2035**
ESCORT V Cabriolet (ALL)								
1.4	F6F, F6G	52	08/1990 → 12/1992		70	12	054022604010	**MAN662**
1.6	LJF	77	08/1990 → 09/1992		70	12	054022604010	**MAN662**
ESCORT V Station wagon (GAL, AVL)								
1.3	J4B, J6A	44	09/1991 → 09/1992		55	12	054022581010	**MAN649**
1.3	J4B, J6A	44	09/1991 → 09/1992		70	12	054022604010	**MAN662**
1.4	F6F, F6G	52	01/1991 → 09/1992		55	12	054022581010	**MAN649**
1.4	F6F, F6G	52	08/1990 → 09/1992		70	12	054022604010	**MAN662**
1.6	LUJ, LUK	66	07/1990 → 08/1992		55	12	054022384010	**MAN653**
1.6	LJF	77	08/1990 → 09/1992		70	12	054022604010	**MAN662**
1.6	LUJ, LUK	66	07/1990 → 08/1992		70	12	054022604010	**MAN662**
1.8 D	RTE, RTF, RTH	44	08/1990 → 12/1992		55	12	054022598010	**MAN666**
1.8 D	RTE, RTF, RTH	44	05/1991 → 12/1992		75	12	063341695010	**MAN833**
1.8 D	RTE, RTF, RTH	44	07/1990 → 12/1992		75	12	063532614010	**MAN2614**
1.8 D	RTE, RTF, RTH	44	07/1990 → 12/1992		55	12	063534892520	**MAN2035**
ESCORT VI (GAL)								
1.3	J4B, J6A	44	09/1992 → 01/1995		70	12	054022604010	**MAN662**
1.4	F6F, F6G	52	09/1992 → 12/1994		70	12	054022604010	**MAN662**
1.4	F4B, FUH	55	01/1994 → 12/1994		70	12	054022604010	**MAN662**
1.8 D	RTE, RTF, RTH	44	09/1992 → 12/1994		55	12	054022598010	**MAN666**
1.8 D	RTE, RTF, RTH	44	09/1992 → 01/1995		75	12	063532614010	**MAN2614**
1.8 TD	RFD, RFK, RFS	66	06/1993 → 12/1994		55	12	054022598010	**MAN666**
1.8 TD	RFD, RFK, RFS	66	06/1993 → 12/1994		75	12	063341695010	**MAN833**

		kW		i	A	V	LONG	SHORT
FORD								
ESCORT VI Cabriolet (ALL)								
1.4	F6F, F6G	52	12/1992 → 04/1994		55	12	054022384010	**MAN653**
1.4	F6F, F6G	52	12/1992 → 04/1994		70	12	054022604010	**MAN662**
1.4 i	F4B	55	02/1994 → 12/1994		55	12	054022384010	**MAN653**
1.4 i	F4B	55	02/1994 → 12/1994		70	12	054022604010	**MAN662**
ESCORT VI Station wagon (GAL)								
1.3	J4B, J6A	44	09/1992 → 12/1994		70	12	054022604010	**MAN662**
1.4	F6F, F6G	52	09/1992 → 01/1994		55	12	054022384010	**MAN653**
1.4	F4B, FUH	55	01/1994 → 12/1994		55	12	054022384010	**MAN653**
1.4	F6F, F6G	52	09/1992 → 01/1994		70	12	054022604010	**MAN662**
1.4	F4B, FUH	55	01/1994 → 12/1994		70	12	054022604010	**MAN662**
1.6 i 16V	L1E	66	09/1992 → 12/1994		55	12	054022384010	**MAN653**
1.6 i 16V	L1E	66	09/1992 → 12/1994		70	12	054022604010	**MAN662**
1.8 D	RTH	44	09/1992 → 12/1994		55	12	054022598010	**MAN666**
1.8 TD	RFD, RFK	66	06/1993 → 12/1994		55	12	054022598010	**MAN666**
1.8 TD	RFD, RFK	66	06/1993 → 12/1994		75	12	063341695010	**MAN833**
ESCORT VI Tre volumi (GAL)								
1.3	J4B, J6A	44	08/1993 → 01/1995		70	12	054022604010	**MAN662**
1.4	F6F, F6G	52	08/1993 → 04/1994		55	12	054022384010	**MAN653**
1.4	F4B, FUH	55	02/1994 → 12/1994		55	12	054022384010	**MAN653**
1.4	F4B, FUH	55	02/1994 → 12/1994		70	12	054022604010	**MAN662**
1.4	F6F, F6G	52	08/1993 → 04/1994		70	12	054022604010	**MAN662**
1.6 i 16V	L1E, L1K	66	08/1993 → 12/1994		55	12	054022384010	**MAN653**
1.6 i 16V	L1E, L1K	66	08/1993 → 12/1994		70	12	054022604010	**MAN662**
1.8 D	RTE, RTF, RTH	44	08/1993 → 12/1994		55	12	054022598010	**MAN666**
1.8 D	RTE, RTF, RTH	44	08/1993 → 01/1995		75	12	063532614010	**MAN2614**
1.8 TD	RFD, RFK	66	08/1993 → 12/1994		55	12	054022598010	**MAN666**
ESCORT VII (GAL, AAL, ABL)								
1.3	J4B, J6A	44	01/1995 → 10/1998		55	12	054022384010	**MAN653**
1.3	J4B, J6A	44	01/1995 → 10/1998		70	12	054022604010	**MAN662**
1.4	F4B	55	01/1995 → 10/1998		55	12	054022384010	**MAN653**
1.4	F4B	55	01/1995 → 10/1998		70	12	063533100530	**MAN2021**
1.6 16V	L1E	66	01/1995 → 10/1998		70	12	063533100530	**MAN2021**
1.6 16V 4x4	L1E	66	01/1995 → 10/1998		70	12	063533100530	**MAN2021**
1.6 i 16V	L1H	65	01/1995 → 08/1995		70	12	063533100530	**MAN2021**
1.8 16V	RDA	77	01/1995 → 08/1995	☸	70	12	063533100530	**MAN2021**
1.8 16V	RKC	85	09/1995 → 10/1998		70	12	063533100530	**MAN2021**
1.8 D	RTE, RTF, RTH	44	01/1995 → 12/1996		55	12	054022598010	**MAN666**
1.8 D	RTE, RTF, RTH	44	01/1995 → 12/1996	☸	75	12	063341695010	**MAN833**
1.8 D	RTE, RTF, RTH	44	01/1995 → 12/1996		75	12	063532614010	**MAN2614**
1.8 TD	RFD, RFK	66	01/1995 → 10/1998		55	12	054022598010	**MAN666**
1.8 TD	RFD, RFK	66	01/1997 → 10/1998		75	12	063341695010	**MAN833**
1.8 TD	RFD, RFK	66	01/1995 → 10/1998	☸	70	12	063341730010	**MAN938**
1.8 Turbo D	RVA	51	12/1995 → 10/1998		55	12	054022598010	**MAN666**

		kW			A	V	LONG	SHORT
FORD								
ESCORT VII (GAL, AAL, ABL)								
1.8 Turbo D	RVA	51	12/1995 → 10/1998		75	12	063341695010	**MAN833**
1.8 Turbo D	RVA	51	04/1996 → 10/1998		70	12	063341730010	**MAN938**
ESCORT VII Cabriolet (ALL)								
1.4	F4B	55	02/1995 → 08/1998		55	12	054022384010	**MAN653**
1.4	F4B	55	02/1995 → 08/1998		70	12	063533100530	**MAN2021**
1.6 16V XR3i	L1H	65	02/1995 → 12/1996		70	12	063533100530	**MAN2021**
1.6 16V XR3i	L1E	66	02/1995 → 09/1999		70	12	063533100530	**MAN2021**
1.8 16V XR3i	RKC	85	10/1995 → 08/1998		70	12	063533100530	**MAN2021**
1.8 16V XR3i	RQB	96	02/1995 → 08/1995		70	12	063533100530	**MAN2021**
1.8 16V XR3i	RDA	77	02/1995 → 08/1998		70	12	063533100530	**MAN2021**
1.8 TD	RFD, RFK	66	09/1995 → 12/1996		55	12	054022598010	**MAN666**
1.8 TD	RFD, RFK	66	09/1995 → 12/1996		75	12	063341695010	**MAN833**
1.8 TD	RFD, RFK	66	09/1995 → 09/1996		70	12	063341730010	**MAN938**
1.8 Turbo D	RVA	51	10/1996 → 08/1999		55	12	054022598010	**MAN666**
1.8 Turbo D	RVA	51	10/1996 → 08/1999		75	12	063341695010	**MAN833**
1.8 Turbo D	RVA	51	10/1996 → 08/1999		70	12	063341730010	**MAN938**
ESCORT VII Station wagon (GAL, ANL)								
1.3	J4B, J6A	44	01/1995 → 10/1998		55	12	054022384010	**MAN653**
1.3	J4B, J6A	44	01/1995 → 10/1998		70	12	054022604010	**MAN662**
1.4	F4B, FUH	55	01/1995 → 02/1999		55	12	054022384010	**MAN653**
1.4	F4B, FUH	55	01/1995 → 02/1999		70	12	063533100530	**MAN2021**
1.6 16V	L1E	66	01/1995 → 02/1999		70	12	063533100530	**MAN2021**
1.6 i 16V	L1H	65	01/1995 → 08/1995		70	12	063533100530	**MAN2021**
1.8 16V	RKC	85	09/1995 → 02/1999		70	12	063533100530	**MAN2021**
1.8 16V	RDA	77	01/1995 → 08/1995		70	12	063533100530	**MAN2021**
1.8 D	RTE, RTF, RTH	44	01/1995 → 02/1999		55	12	054022598010	**MAN666**
1.8 D	RTE, RTF, RTH	44	01/1997 → 02/1999		75	12	063341695010	**MAN833**
1.8 D	RTE, RTF, RTH	44	01/1996 → 02/1999		70	12	063341730010	**MAN938**
1.8 D	RTE, RTF, RTH	44	01/1995 → 02/1999		75	12	063532614010	**MAN2614**
1.8 TD	RFD, RFK	66	01/1995 → 02/1999		55	12	054022598010	**MAN666**
1.8 TD	RFD, RFK	66	01/1997 → 02/1999		75	12	063341695010	**MAN833**
1.8 TD	RFD, RFK	66	01/1995 → 02/1999		70	12	063341730010	**MAN938**
1.8 Turbo D	RVA	51	12/1995 → 02/1999		55	12	054022598010	**MAN666**
1.8 Turbo D	RVA	51	12/1995 → 02/1999		75	12	063341695010	**MAN833**
1.8 Turbo D	RVA	51	04/1996 → 02/1999		70	12	063341730010	**MAN938**
ESCORT VII Tre volumi (GAL, AFL)								
1.3	J4B, J6A	44	01/1995 → 02/1999		55	12	054022384010	**MAN653**
1.3	J4B, J6A	44	01/1995 → 02/1999		70	12	054022604010	**MAN662**
1.4	F4B, FUH	55	01/1995 → 02/1999		55	12	054022384010	**MAN653**
1.4	F4B, FUH	55	01/1995 → 02/1999		70	12	063533100530	**MAN2021**
1.6 i 16V	L1H	65	01/1995 → 08/1995		70	12	063533100530	**MAN2021**
1.6 i 16V	L1E, L1K	66	01/1995 → 02/1999		70	12	063533100530	**MAN2021**
1.8 16V	RKC	85	09/1995 → 02/1999		70	12	063533100530	**MAN2021**
1.8 16V	RDA	77	01/1995 → 08/1995		70	12	063533100530	**MAN2021**

		kW			A	V	LONG	SHORT
FORD								
ESCORT VII Tre volumi (GAL, AFL)								
1.8 D	RTE, RTF, RTH	44	01/1995 → 12/1996		55	12	054022598010	**MAN666**
1.8 D	RTE, RTF, RTH	44	01/1995 → 12/1996	⊛	75	12	063341695010	**MAN833**
1.8 D	RTE, RTF, RTH	44	01/1995 → 12/1996		75	12	063532614010	**MAN2614**
1.8 TD	RFD, RFK	66	01/1995 → 10/1998		55	12	054022598010	**MAN666**
1.8 TD	RFD, RFK	66	01/1997 → 10/1998		75	12	063341695010	**MAN833**
1.8 TD	RFD, RFK	66	01/1995 → 10/1998	⊛	70	12	063341730010	**MAN938**
1.8 Turbo D	RVA	51	12/1995 → 02/1999		55	12	054022598010	**MAN666**
1.8 Turbo D	RVA	51	12/1995 → 02/1999		75	12	063341695010	**MAN833**
1.8 Turbo D	RVA	51	04/1996 → 02/1999	⊛	70	12	063341730010	**MAN938**
FIESTA Furgonato (F3L, F5L)								
1.3	J6B	44	09/1991 → 02/1996		55	12	054022384010	**MAN653**
1.8 D	RTC, RTD, RTG	44	09/1991 → 02/1996		70	12	054022585010	**MAN652**
1.8 D	RTC, RTD, RTG	44	09/1991 → 02/1996		55	12	054022598010	**MAN666**
1.8 D	RTC, RTD, RTG	44	09/1991 → 02/1996		75	12	063341695010	**MAN833**
FIESTA Furgonato (FVD)								
1.0	TKB	33	08/1983 → 11/1989		55	12	054022384010	**MAN653**
1.0	TKB	33	09/1983 → 02/1989		45	12	063324199010	**MAN107**
1.4		52	10/1986 → 02/1989		70	12	054022604010	**MAN662**
1.4		52	10/1986 → 02/1989		55	12	063534892520	**MAN2035**
1.6 D		40	04/1984 → 02/1989		55	12	063534892520	**MAN2035**
1.8 D (FVJ)	RTC, RTD, RTG	43	03/1989 → 12/1995		70	12	054022585010	**MAN652**
1.8 D (FVJ)	RTC, RTD, RTG	43	03/1989 → 12/1995		55	12	054022598010	**MAN666**
1.8 D (FVJ)	RTC, RTD, RTG	43	03/1989 → 12/1995		75	12	063532614010	**MAN2614**
FIESTA Furgonato (J5_, J3_)								
1.3	J4C	44	02/1996 →		55	12	054022384010	**MAN653**
1.3	J4C	44	02/1996 →		70	12	063533100540	**MAN2022**
1.8 DI	RTN, RTP	55	09/2000 → 12/2002		90	12	063341711010	**MAN1142**
1.8 DI	RTN, RTP	55	09/2000 →		70	12	063341730010	**MAN938**
1.8 DI	RTN, RTP	55	09/2000 →		80	12	063341758010	**MAN1143**
1.8 DI	RTN, RTP	55	09/2000 →		90	12	063341778010	**MAN1155**
FIESTA Furgonato (JV_)								
TD 1.8	RTN, RTP, RTQ	55	03/2000 →		70	12	063341730010	**MAN938**
TD 1.8	RTN, RTP, RTQ	55	03/2000 →		80	12	063341758010	**MAN1143**
FIESTA Furgonato (WFVT)								
1.0 (WFVT)	TKA	29	10/1977 → 11/1986		55	12	054022384010	**MAN653**
1.1 (WFVT)		39	10/1977 → 11/1986		55	12	054022384010	**MAN653**
FIESTA I (GFBT)								
0.9	TLA	33	05/1976 → 08/1983		55	12	054022384010	**MAN653**
0.9	TKA, TKW	29	05/1976 → 08/1983		55	12	054022384010	**MAN653**
1.1	GLA	39	05/1976 → 08/1983		55	12	054022384010	**MAN653**
1.1 (WFBT)	GLW	40	02/1981 → 08/1981		55	12	054022384010	**MAN653**
1.3	J3E	49	08/1977 → 08/1983		55	12	054022384010	**MAN653**
1.6 XR2	L3E	62	08/1981 → 08/1983		55	12	054022384010	**MAN653**

		kW			A	V	LONG	SHORT
FORD								
FIESTA II (FBD)								
1.0		33	01/1986 → 11/1989		55	12	054022384010	**MAN653**
1.0		33	09/1983 → 02/1989		45	12	063324199010	**MAN107**
1.0 (FBD)	TKB	33	01/1986 → 02/1989		55	12	054022384010	**MAN653**
1.0 (FBD)	TKB	33	09/1983 → 02/1989		45	12	063324199010	**MAN107**
1.1 (FBD)	GLC, GSF	37	01/1986 → 02/1989		55	12	054022384010	**MAN653**
1.1 (FBD)	GSH	36	05/1986 → 02/1989		55	12	054022581010	**MAN649**
1.1 (FBD)	GLC, GSF	37	09/1983 → 02/1989		45	12	063324199010	**MAN107**
1.3 (FBD)	JPC	51	09/1983 → 12/1985		55	12	063534892520	**MAN2035**
1.4	FUBA	51	09/1983 → 01/1987		55	12	063534892520	**MAN2035**
1.4 (FBD)	F6A, F6C (CVH)	52	10/1986 → 02/1989		55	12	054022384010	**MAN653**
1.4 (FBD)	FUB	55	10/1985 → 11/1989		55	12	054022384010	**MAN653**
1.4 (FBD)	FUB (CVH)	55	10/1985 → 11/1989		55	12	054022581010	**MAN649**
1.4 (FBD)	F6A, F6C	52	10/1986 → 02/1989		55	12	054022581010	**MAN649**
1.4 (FBD)	F6A, F6C	52	10/1986 → 02/1989		70	12	054022604010	**MAN662**
1.4 (FBD)	F6A, F6C	52	10/1986 → 02/1989		55	12	063534892520	**MAN2035**
1.4 (FBD)	FUD	54	02/1987 → 02/1989		55	12	063534892520	**MAN2035**
1.4 (FBD)	FUB	55	01/1986 → 02/1989		55	12	063534892520	**MAN2035**
1.6		58	01/1985 → 02/1989		55	12	054022384010	**MAN653**
1.6 D (FBD)	LTB	40	04/1984 → 02/1989		55	12	054022581010	**MAN649**
1.6 D (FBD)	LTB	40	04/1984 → 02/1989		55	12	063324145010	**MAN100**
1.6 XR2 (FBD)	LUD	70	03/1984 → 02/1989		55	12	054022384010	**MAN653**
1.6 XR2 (FBD)	LUB (L3E)	71	04/1984 → 02/1989		55	12	054022384010	**MAN653**
1.6 XR2 (FBD)	LUB (2V HC)	71	04/1984 → 02/1989		55	12	054022581010	**MAN649**
1.6 XR2 (FBD)	LUD	70	03/1984 → 02/1989		55	12	063534892520	**MAN2035**
1.6 XR2 (FBD)	LUB	71	04/1984 → 02/1989		55	12	063534892520	**MAN2035**
FIESTA III (GFJ)								
1.0	TLB	33	03/1989 → 12/1995		55	12	054022384010	**MAN653**
1.3	JBC	44	01/1991 → 12/1992		55	12	054022384010	**MAN653**
1.3		44	06/1991 → 12/1995		70	12	054022604010	**MAN662**
1.3 Cat.	J6B	44	06/1991 → 08/1996		70	12	054022604010	**MAN662**
1.4	FUG, FUJ	54	03/1989 → 12/1995		55	12	054022598010	**MAN666**
1.4	F6E	52	03/1989 → 12/1995		55	12	054022598010	**MAN666**
1.4	FUG, FUJ	54	03/1989 → 05/1991		55	12	063324145010	**MAN100**
1.4	F6E	52	03/1989 → 12/1995		55	12	063534892520	**MAN2035**
1.4 Cat.	F4A	54	03/1989 → 12/1995		55	12	054022598010	**MAN666**
1.4 Cat.	F4A	54	02/1994 → 07/1995		55	12	063324145010	**MAN100**
1.4 Cat.	F4A	54	01/1994 → 12/1995		55	12	063534892520	**MAN2035**
1.6	LUH	65	01/1989 → 01/1994		55	12	054022598010	**MAN666**
1.6		66	03/1989 → 12/1992		55	12	063534892520	**MAN2035**
1.6	LUH	65	03/1989 → 01/1994		55	12	063534892520	**MAN2035**
1.6 Turbo (FBJT)	LHA	96	03/1990 → 10/1992		55	12	054022598010	**MAN666**

		kW		i	A	V	MAGNETI MARELLI LONG	MAGNETI MARELLI SHORT
FORD								
FIESTA III (GFJ)								
1.6 Turbo (FBJT)	LHA	96	07/1990 → 10/1992		55	12	063534892520	**MAN2035**
1.6 XR2i	LJC	81	03/1989 → 01/1994		55	12	054022598010	**MAN666**
1.6 XR2i	LJD	76	03/1989 → 03/1993		55	12	063534892520	**MAN2035**
1.6 XR2i	LJC	81	03/1989 → 01/1994		55	12	063534892520	**MAN2035**
1.8 D	RTC, RTD, RTG	44	03/1989 → 12/1995		70	12	054022585010	**MAN652**
1.8 D	RTC, RTD, RTG	44	03/1989 → 12/1995		55	12	054022598010	**MAN666**
1.8 TD	RFL	57	03/1993 → 12/1995		75	12	063341695010	**MAN833**
1.8 TD	RFL	57	03/1993 → 12/1995		80	12	063341758010	**MAN1143**
FIESTA IV (JA_, JB_)								
1.3 i	J4C, J4J, J4L, J4Q, J4R, J4T	44	08/1995 → 01/2002		55	12	054022384010	**MAN653**
1.3 i	JJA, JJC, JJE, JJJ, JJK, JJM	37	08/1995 → 01/2002		55	12	054022384010	**MAN653**
1.3 i	J4C, J4J, J4L, J4Q, J4R, J4T	44	11/1995 → 01/2002		70	12	063533100540	**MAN2022**
1.3 i	JJA, JJC, JJE, JJJ, JJK, JJM	37	11/1995 → 01/2002		70	12	063533100540	**MAN2022**
1.8 D	RTJ, RTK	44	09/1995 → 04/2000		70	12	063341730010	**MAN938**
1.8 DI	RTN, RTP, RTQ	55	04/2000 → 01/2002		90	12	063341711010	**MAN1142**
1.8 DI	RTN, RTP, RTQ	55	04/2000 → 01/2002		80	12	063341758010	**MAN1143**
FIESTA V (JH_, JD_)								
1.3	A9JA, A9JB	51	11/2001 →		104	12	063380001010	**MAN8001**
1.3	BAJA	44	11/2001 →		104	12	063380001010	**MAN8001**
1.4 TDCi	F6JA, F6JB	50	11/2001 →		80	12	063380002010	**MAN8002**
1.6 TDCi	HHJA, HHJB	66	11/2004 →		150	12	063377416010	**MAN7416**
FIESTA Van								
1.3	A9JA, A9JB	51	10/2003 →		104	12	063380001010	**MAN8001**
1.4 TDCi	F6JA, F6JB	50	10/2003 →		80	12	063380002010	**MAN8002**
FOCUS (DAW, DBW)								
1.4 16V	FXDA, FXDB, FXDC, FXDD	55	10/1998 → 11/2004		80	12	063377410010	**MAN7410**
1.4 16V	FXDA, FXDB, FXDC, FXDD	55	10/1998 → 11/2004		90	12	063377411010	**MAN7411**
1.6 16V	FYDA, FYDB, FYDC, FYDD, FYDH	74	10/1998 → 11/2004		80	12	063377410010	**MAN7410**
1.6 16V	FYDA, FYDB, FYDC, FYDD, FYDH	74	10/1998 → 11/2004		90	12	063377411010	**MAN7411**
1.8 16V	EYDB, EYDC, EYDD, EYDE, EYDF, EYDG, EYDI, EYDJ, EYDL	85	10/1998 → 11/2004		80	12	063377409010	**MAN7409**
1.8 16V	EYDB, EYDC, EYDD, EYDE, EYDF, EYDG, EYDI, EYDJ, EYDL	85	10/1998 → 11/2004		90	12	063377411010	**MAN7411**
1.8 DI / TDDi	BHDA, BHDB	55	08/1999 → 11/2004		90	12	063377413010	**MAN7413**
1.8 DI / TDDi	BHDA, BHDB	55	08/1999 → 08/2004		90	12	063377414010	**MAN7414**
1.8 DI / TDDi	BHDA, BHDB	55	08/1999 → 11/2004		124	12	063380010010	**MAN8010**
1.8 TDCi	F9DA, F9DB	85	03/2001 → 11/2004		90	12	063377413010	**MAN7413**
1.8 TDCi	FFDA	74	08/2002 → 08/2004		90	12	063377414010	**MAN7414**

		kW			A	V	LONG	SHORT
FORD								
FOCUS (DAW, DBW)								
1.8 Turbo DI / TDDi	C9DA, C9DB, C9DC	66	10/1998 → 11/2004		90	12	063377412010	**MAN7412**
1.8 Turbo DI / TDDi	C9DA, C9DB, C9DC	66	10/1998 → 11/2004		124	12	063380010010	**MAN8010**
2.0 16V	EDDB, EDDC, EDDD, EDDF	96	10/1998 → 11/2004		80	12	063377409010	**MAN7409**
2.0 16V	EDDB, EDDC, EDDD, EDDF	96	10/1998 → 11/2004		90	12	063377414010	**MAN7414**
RS	HMDA	158	10/2002 → 11/2004		90	12	063377413010	**MAN7413**
FOCUS C-MAX								
1.6	HWDA, HWDB	74	10/2003 → 03/2007		105	12	063377421010	**MAN7421**
1.6 TDCi	HHDA, HHDB	66	02/2005 → 03/2007		150	12	063377416010	**MAN7416**
1.6 TDCi	G8DA, G8DB	80	10/2003 → 03/2007		150	12	063377416010	**MAN7416**
1.8	Q7DA, QQDA, QQDB	92	04/2004 → 03/2007		150	12	063377417010	**MAN7417**
1.8 TDCi	KKDA	85	01/2005 → 03/2007		150	12	063377418010	**MAN7418**
1.8 TDCi	KKDA	85	01/2005 → 03/2007		105	12	063377443010	**MAN7443**
2.0	AODA, AODB, SYDA	107	04/2004 → 03/2007		150	12	063377420010	**MAN7420**
2.0 TDCi	G6DA, G6DB, G6DD	100	10/2003 → 03/2007		150	12	063377416010	**MAN7416**
FOCUS II (DA_)								
1.6	HWDA, HWDB, SHDA	74	11/2004 →		105	12	063377421010	**MAN7421**
1.6 TDCi	G8DA, G8DB	80	11/2004 →		150	12	063377416010	**MAN7416**
1.6 TDCi	GPDA, GPDC, HHDA, HHDB	66	01/2005 →		150	12	063377416010	**MAN7416**
1.8 TDCi	KKDA, KKDB	85	01/2005 →		150	12	063377418010	**MAN7418**
1.8 TDCi	KKDA, KKDB	85	01/2005 →		105	12	063377443010	**MAN7443**
2.0	AODA, AODB	107	11/2004 →		150	12	063377420010	**MAN7420**
2.0 TDCi	G6DA, G6DB, G6DD	100	11/2004 →		150	12	063377416010	**MAN7416**
2.0 TDCi	G6DA, G6DB, G6DD	100	11/2004 →		150	12	063377419010	**MAN7419**
2.0 TDCi	IXDA	81	02/2008 →		150	12	063377419010	**MAN7419**
FOCUS II Cabriolet								
1.6	HWDA, HWDB	74	10/2006 →		105	12	063377421010	**MAN7421**
2.0 TDCi	G6DA, G6DB, G6DD	100	10/2006 →		150	12	063377416010	**MAN7416**
FOCUS II Station wagon (DAW_)								
1.6	HWDA, HWDB, SHDA	74	02/2005 →		105	12	063377421010	**MAN7421**
1.6 TDCi	G8DA, G8DB	80	11/2004 →		150	12	063377416010	**MAN7416**
1.6 TDCi	GPDA, GPDC, HHDA, HHDB	66	11/2004 →		150	12	063377416010	**MAN7416**
1.8 TDCi	KKDA, KKDB	85	11/2004 →		150	12	063377418010	**MAN7418**
1.8 TDCi	KKDA, KKDB	85	11/2004 →		105	12	063377443010	**MAN7443**
2.0	AODA, AODB	107	02/2005 →		150	12	063377420010	**MAN7420**
2.0 TDCi	G6DA, G6DB, G6DD	100	02/2005 →		150	12	063377416010	**MAN7416**
2.0 TDCi	IXDA	81	02/2008 →		150	12	063377419010	**MAN7419**
2.0 TDCi	G6DA, G6DB, G6DD	100	11/2004 →		150	12	063377419010	**MAN7419**

		kW		i	A	V	LONG	SHORT
FORD								
FOCUS II Tre volumi (DA_)								
1.6	HWDA, HWDB, SHDA	74	04/2005 →		105	12	063377421010	**MAN7421**
1.6 TDCi	G8DA, G8DB	80	04/2005 →		150	12	063377416010	**MAN7416**
1.6 TDCi	HHDA, HHDB	66	04/2005 →		150	12	063377416010	**MAN7416**
1.8 TDCi	KKDA, KKDB	85	04/2005 →		150	12	063377418010	**MAN7418**
1.8 TDCi	KKDA, KKDB	85	04/2005 →		105	12	063377443010	**MAN7443**
2.0 TDCi	G6DA, G6DB, G6DD	100	04/2005 →		150	12	063377416010	**MAN7416**
2.0 TDCi	G6DA, G6DB, G6DD	100	04/2005 →		150	12	063377419010	**MAN7419**
FOCUS Station wagon (DNW)								
1.4 16V	FXDA, FXDB, FXDC, FXDD	55	02/1999 → 11/2004		80	12	063377410010	**MAN7410**
1.4 16V	FXDA, FXDB, FXDC, FXDD	55	02/1999 → 11/2004		90	12	063377411010	**MAN7411**
1.6 16V	FYDA, FYDB, FYDC, FYDD, FYDH	74	02/1999 → 11/2004		80	12	063377410010	**MAN7410**
1.6 16V	FYDA, FYDB, FYDC, FYDD, FYDH	74	02/1999 → 11/2004		90	12	063377411010	**MAN7411**
1.8 16V	EYDB, EYDC, EYDD, EYDE, EYDF, EYDG, EYDI, EYDJ, EYDL	85	02/1999 → 10/2001		80	12	063377409010	**MAN7409**
1.8 16V	EYDB, EYDC, EYDD, EYDE, EYDF, EYDG, EYDI, EYDJ, EYDL	85	02/1999 → 11/2004		90	12	063377411010	**MAN7411**
1.8 BiFuel		82	02/2003 → 08/2004		80	12	063377409010	**MAN7409**
1.8 DI / TDDi	BHDA, BHDB	55	08/1999 → 08/2004		90	12	063377414010	**MAN7414**
1.8 TDCi	F9DA, F9DB	85	03/2001 → 11/2004		90	12	063377413010	**MAN7413**
1.8 TDCi	FFDA	74	08/2002 → 08/2004		90	12	063377414010	**MAN7414**
1.8 Turbo DI / TDDi	C9DA, C9DB, C9DC	66	02/1999 → 11/2004		90	12	063377412010	**MAN7412**
2.0 16V	EDDB, EDDC, EDDD, EDDF	96	02/1999 → 08/2004		80	12	063377409010	**MAN7409**
2.0 16V	EDDB, EDDC, EDDD, EDDF	96	02/1999 → 11/2004		90	12	063377414010	**MAN7414**
FOCUS Tre volumi (DFW)								
1.4 16V	FXDA, FXDB, FXDC, FXDD	55	02/1999 → 11/2004		80	12	063377410010	**MAN7410**
1.4 16V	FXDA, FXDB, FXDC, FXDD	55	02/1999 → 11/2004		90	12	063377411010	**MAN7411**
1.6 16V	FYDA, FYDB, FYDC, FYDD, FYDH	74	02/1999 → 11/2004		80	12	063377410010	**MAN7410**
1.6 16V	FYDA, FYDB, FYDC, FYDD, FYDH	74	02/1999 → 11/2004		90	12	063377411010	**MAN7411**
1.8 16V	EYDB, EYDC, EYDD, EYDE, EYDF, EYDG, EYDI, EYDJ, EYDL	85	02/1999 → 10/2001		80	12	063377409010	**MAN7409**
1.8 16V	EYDB, EYDC, EYDD, EYDE, EYDF, EYDG, EYDI, EYDJ, EYDL	85	02/1999 → 11/2004		90	12	063377411010	**MAN7411**
1.8 TDCi	F9DA, F9DB	85	03/2001 → 11/2004		90	12	063377413010	**MAN7413**
1.8 TDCi	FFDA	74	08/2002 → 08/2004		90	12	063377414010	**MAN7414**
1.8 Turbo DI / TDDi	C9DA, C9DB, C9DC	66	02/1999 → 11/2004		90	12	063377412010	**MAN7412**

		kW			A	V	LONG	SHORT
FORD								
FOCUS Tre volumi (DFW)								
1.8 Turbo DI / TDDi	C9DA, C9DB, C9DC	66	02/1999 → 11/2004		124	12	063380010010	**MAN8010**
1.8 Turbo DI / TDDi	BHDA, BHDB	55	08/2001 → 03/2005		124	12	063380010010	**MAN8010**
2.0 16V	EDDB, EDDC, EDDD, EDDF	96	02/1999 → 08/2004		80	12	063377409010	**MAN7409**
2.0 16V	EDDB, EDDC, EDDD, EDDF	96	02/1999 → 11/2004		90	12	063377414010	**MAN7414**
FUSION (JU_)								
1.4 TDCi	F6JA, F6JB	50	08/2002 →		80	12	063380002010	**MAN8002**
1.6 TDCi	HHJA, HHJB	66	11/2004 →		150	12	063377416010	**MAN7416**
GALAXY (WGR)								
1.9 TDI	1Z, AHU, ANU	66	06/1999 → 01/2005		90	12	063533250010	**MAN2037**
1.9 TDI	AFN, AVG	81	06/1999 → 03/2000		90	12	063533250010	**MAN2037**
1.9 TDI	AUY	85	04/2000 → 01/2005		90	12	063533250010	**MAN2037**
1.9 TDI	AFN, AVG	81	09/1998 → 05/1999		120	12	063535150200	**MAN2024**
GRANADA (GGTL, GGFL)								
2.0	NY	66	06/1975 → 07/1977		55	12	054022384010	**MAN653**
2.0	OHC LC	64	01/1976 → 08/1977		55	12	054022384010	**MAN653**
2.0	TL 20 LC	73	01/1975 → 12/1975		55	12	054022384010	**MAN653**
2.3	YYH	79	01/1975 → 08/1977		55	12	054022384010	**MAN653**
2.3		79	01/1972 → 02/1976		55	12	054022384010	**MAN653**
GRANADA (GU)								
1.6	LCK	55	07/1981 → 08/1985		55	12	054022384010	**MAN653**
1.6	LCK	55	07/1981 → 12/1984		55	12	054022581010	**MAN649**
1.7	TV 17 LC	51	08/1977 → 12/1981		55	12	054022384010	**MAN653**
1.7	MY	54	08/1977 → 07/1981		55	12	054022384010	**MAN653**
1.9 D		40	08/1977 → 08/1982		55	12	054022384010	**MAN653**
1.9 D		40	01/1978 → 08/1982		55	12	054022581010	**MAN649**
2.0	OHC LC	64	08/1977 → 07/1979		55	12	054022384010	**MAN653**
2.0	NYP	66	01/1985 → 08/1985		55	12	054022581010	**MAN649**
2.0	NEK	77	01/1985 → 08/1985		55	12	054022581010	**MAN649**
2.0	NEP	74	01/1985 → 08/1985		55	12	054022581010	**MAN649**
2.0	NYP	66	08/1977 → 02/1981		45	12	063324199010	**MAN107**
2.1 D	WTA	46	09/1978 → 08/1981		55	12	063324145010	**MAN100**
2.3	YYH	79	08/1977 → 06/1979		55	12	054022384010	**MAN653**
2.3	YYU	82	06/1981 → 04/1985		55	12	054022384010	**MAN653**
2.3	YYP	84	06/1979 → 08/1985		55	12	054022384010	**MAN653**
2.3	YYH	79	08/1977 → 06/1979		45	12	063324199010	**MAN107**
2.3	YYP	84	06/1979 → 02/1981		45	12	063324199010	**MAN107**
2.5 D	STP	51	08/1982 → 04/1985		55	12	054022384010	**MAN653**
2.8	PYA	99	08/1977 → 08/1985		55	12	054022384010	**MAN653**
2.8	PYU	97	06/1981 → 08/1985		55	12	054022384010	**MAN653**
2.8	PYA	99	08/1977 → 02/1981		45	12	063324199010	**MAN107**
2.8 i	PRD	108	08/1977 → 04/1985		55	12	054022384010	**MAN653**
2.8 i	PRC	110	10/1982 → 04/1985		55	12	054022384010	**MAN653**
2.8 i	PRB	118	08/1977 → 07/1981		55	12	054022384010	**MAN653**

		kW			A	V	LONG	SHORT
FORD								
GRANADA Coupe (GGCL)								
2.3		79	01/1972 → 02/1976		55	12	054022384010	**MAN653**
GRANADA Station wagon (GGNL)								
2.0	TL 20 LC	73	01/1975 → 12/1975		55	12	054022384010	**MAN653**
2.0	TL 20 LC	70	01/1976 → 07/1977		55	12	054022384010	**MAN653**
2.0	NY	66	06/1975 → 07/1977		55	12	054022384010	**MAN653**
2.3		79	01/1972 → 02/1976		55	12	054022384010	**MAN653**
GRANADA Station wagon (GNU)								
1.7	MYE	54	08/1977 → 07/1981		55	12	054022384010	**MAN653**
2.0	NEP	74	08/1979 → 04/1985		55	12	054022384010	**MAN653**
2.0	OHC LC	64	08/1977 → 07/1979		55	12	054022384010	**MAN653**
2.0	NYP	66	08/1977 → 04/1985		55	12	054022384010	**MAN653**
2.0	NEK	77	08/1981 → 08/1985		55	12	063324145010	**MAN100**
2.0	NYP	66	08/1977 → 02/1981		45	12	063324199010	**MAN107**
2.3	YYH	79	08/1977 → 06/1979		55	12	054022384010	**MAN653**
2.3	YYP	84	06/1979 → 08/1985		55	12	054022384010	**MAN653**
2.3	YYU	82	06/1981 → 04/1985		55	12	054022384010	**MAN653**
2.3	YYH	79	08/1977 → 06/1979		45	12	063324199010	**MAN107**
2.3	YYP	84	06/1979 → 02/1981		45	12	063324199010	**MAN107**
2.5 D	STP	51	08/1982 → 04/1985		55	12	054022384010	**MAN653**
2.8	PYU	97	06/1981 → 08/1985		55	12	054022384010	**MAN653**
2.8	PYA	99	08/1977 → 08/1985		55	12	054022384010	**MAN653**
2.8	PYA	99	08/1977 → 02/1981		45	12	063324199010	**MAN107**
2.8 i	PRC	110	10/1982 → 04/1985		55	12	054022384010	**MAN653**
2.8 i	PRD	108	08/1977 → 04/1985		55	12	054022384010	**MAN653**
KA								
1.2	FP4	51	10/2008 →		70	12	063377011010	**MAN7011**
KA (RB_)								
1.3 i	JJD, JJF, JJG, JJH, JJL	36	06/1998 → 10/2002		70	12	063533100540	**MAN2022**
1.3 i	JJB	37	09/1996 → 10/2002		70	12	063533100540	**MAN2022**
1.3 i	BAA, J4D, J4K, J4M, J4N, J4P,J4S	44	09/1996 → 10/2002		70	12	063533100540	**MAN2022**
1.3 i	A9A, A9B	51	08/2002 → 11/2008		104	12	063380001010	**MAN8001**
1.6 i	CDB, CDC	70	07/2003 → 11/2008		104	12	063380001010	**MAN8001**
KUGA								
2.0 TDCi	G6DG, UKDA	100	03/2008 →		150	12	063377416010	**MAN7416**
2.0 TDCi	UFDA	103	03/2010 →		150	12	063377416010	**MAN7416**
2.0 TDCi 4x4	G6DG, UKDA	100	03/2008 →		150	12	063377416010	**MAN7416**
2.0 TDCi 4x4	UFDA	103	03/2010 →		150	12	063377416010	**MAN7416**
MONDEO I (GBP)								
1.8 TD	RFM, RFN	65	06/1993 → 08/1996		75	12	063341695010	**MAN833**
1.8 TD	RFM, RFN	66	10/1995 → 08/1996		75	12	063341695010	**MAN833**
MONDEO I Station wagon (BNP)								
1.8 TD	RFM, RFN	66	11/1995 → 08/1996		75	12	063341695010	**MAN833**

		kW			A	V	LONG	SHORT
FORD								
MONDEO I Tre volumi (GBP)								
1.8 TD	RFM, RFN	66	10/1995 → 08/1996		75	12	063341695010	**MAN833**
MONDEO III (B5Y)								
1.8 16V	CGBA, CGBB	81	11/2000 → 08/2007	MAN	124	12	063380004010	**MAN8004**
1.8 16V	CGBA, CGBB	81	11/2000 → 08/2007	AUTO	124	12	063380005010	**MAN8005**
1.8 16V	CHBA, CHBB	92	11/2000 → 08/2007	AUTO	124	12	063380005010	**MAN8005**
1.8 16V	CHBA, CHBB	92	11/2000 → 08/2007	MAN	124	12	063380004010	**MAN8004**
1.8 SCi	CFBA	96	06/2003 → 08/2007		124	12	063380004010	**MAN8004**
2.0 16V	CJBA, CJBB	107	11/2000 → 08/2007	MAN	124	12	063380004010	**MAN8004**
2.0 16V	CJBA, CJBB	107	11/2000 → 08/2007	AUTO	124	12	063380005010	**MAN8005**
2.0 16V DI / TDDi / TDCi	D5BA, SDBA	66	11/2000 → 08/2007		124	12	063380005010	**MAN8005**
2.0 16V TDDi / TDCi	D6BA, HJBA, HJBB, HJBC	85	11/2000 → 08/2007		124	12	063380005010	**MAN8005**
2.0 TDCi	FMBA, N7BA	96	10/2001 → 08/2007		124	12	063380005010	**MAN8005**
2.2 TDCi	QJBA, QJBB	114	09/2004 → 08/2007		124	12	063380005010	**MAN8005**
2.5 V6 24V	LCBD	125	11/2000 → 08/2007		124	12	063380006010	**MAN8006**
ST220	MEBA	166	04/2002 → 08/2007		124	12	063380005010	**MAN8005**
MONDEO III Station wagon (BWY)								
1.8 16V	CGBA, CGBB	81	11/2000 → 08/2007	MAN	124	12	063380004010	**MAN8004**
1.8 16V	CGBA, CGBB	81	11/2000 → 08/2007	AUTO	124	12	063380005010	**MAN8005**
1.8 16V	CHBA, CHBB	92	11/2000 → 08/2007	MAN	124	12	063380004010	**MAN8004**
1.8 16V	CHBA, CHBB	92	11/2000 → 08/2007	AUTO	124	12	063380005010	**MAN8005**
1.8 SCi	CFBA	96	06/2003 → 08/2007		124	12	063380004010	**MAN8004**
2.0 16V	CJBA, CJBB	107	11/2000 → 08/2007	MAN	124	12	063380004010	**MAN8004**
2.0 16V	CJBA, CJBB	107	11/2000 → 08/2007	AUTO	124	12	063380005010	**MAN8005**
2.0 16V DI / TDDi / TDCi	D5BA, SDBA	66	11/2000 → 08/2007		124	12	063380005010	**MAN8005**
2.0 16V TDDi / TDCi	D6BA, HJBA, HJBB, HJBC	85	11/2000 → 08/2007		124	12	063380005010	**MAN8005**
2.0 TDCi	FMBA, N7BA	96	10/2001 → 08/2007		124	12	063380005010	**MAN8005**
2.2 TDCi	QJBA, QJBB	114	09/2004 → 08/2007		124	12	063380005010	**MAN8005**
2.5 V6 24V	LCBD	125	11/2000 → 08/2007		124	12	063380006010	**MAN8006**
ST220	MEBA	166	04/2002 → 08/2007		124	12	063380005010	**MAN8005**
MONDEO III Tre volumi (B4Y)								
1.8 16V	CGBA, CGBB	81	11/2000 → 08/2007	MAN	124	12	063380004010	**MAN8004**
1.8 16V	CGBA, CGBB	81	11/2000 → 08/2007	AUTO	124	12	063380005010	**MAN8005**
1.8 16V	CHBA, CHBB	92	11/2000 → 08/2007		124	12	063380004010	**MAN8004**
1.8 SCi	CFBA	96	06/2003 → 08/2007		124	12	063380004010	**MAN8004**
2.0 16V	CJBA, CJBB	107	11/2000 → 08/2007	MAN	124	12	063380004010	**MAN8004**
2.0 16V	CJBA, CJBB	107	11/2000 → 08/2007	AUTO	124	12	063380005010	**MAN8005**
2.0 16V DI / TDDi / TDCi	D5BA, SDBA	66	11/2000 → 08/2007		124	12	063380005010	**MAN8005**
2.0 16V TDDi / TDCi	D6BA, HJBA, HJBB, HJBC	85	11/2000 → 08/2007		124	12	063380005010	**MAN8005**
2.0 TDCi	FMBA, N7BA	96	10/2001 → 08/2007		124	12	063380005010	**MAN8005**
2.2 TDCi	QJBA, QJBB	114	09/2004 → 08/2007		124	12	063380005010	**MAN8005**
2.5 V6 24V	LCBD	125	11/2000 → 08/2007		124	12	063380006010	**MAN8006**
ST220	MEBA	166	04/2002 → 08/2007		124	12	063380005010	**MAN8005**

		kW		i	A	V	MAGNETI MARELLI LONG	MAGNETI MARELLI SHORT
FORD								
ORION I (AFD)								
1.3	JPA	51	07/1983 → 03/1986		55	12	054022581010	**MAN649**
1.6	LP1, LPA	58	07/1983 → 03/1986		55	12	054022581010	**MAN649**
1.6 D	LTA	40	02/1984 → 03/1986		55	12	054022581010	**MAN649**
1.6 D	LTA	40	02/1984 → 02/1986		55	12	063324145010	**MAN100**
1.6 D	LTA	40	04/1984 → 12/1985		55	12	063534892520	**MAN2035**
1.6 i	LR1, LRA	77	07/1983 → 03/1986		55	12	054022581010	**MAN649**
ORION II (AFF)								
1.3		51	11/1986 → 07/1988		55	12	054022384010	**MAN653**
1.3	JBB, JLA, JLB	44	01/1986 → 07/1990		55	12	054022384010	**MAN653**
1.3	JBB, JLA, JLB	44	12/1985 → 07/1990		55	12	054022581010	**MAN649**
1.3		51	11/1986 → 07/1988		55	12	054022581010	**MAN649**
1.4	FUA	55	01/1986 → 07/1990		55	12	054022384010	**MAN653**
1.4	FUC	54	01/1986 → 07/1990		55	12	054022384010	**MAN653**
1.4	FUAA	52	01/1987 → 07/1990		55	12	054022384010	**MAN653**
1.4	FUC	54	01/1986 → 07/1990		55	12	054022581010	**MAN649**
1.4	FUAA	52	01/1987 → 07/1990		70	12	054022604010	**MAN662**
1.4	FUC	54	01/1987 → 07/1990		70	12	054022604010	**MAN662**
1.4	FUA	55	01/1986 → 07/1990		70	12	054022604010	**MAN662**
1.4 Cat.	F6B, F6D	54	02/1987 → 07/1990		55	12	054022384010	**MAN653**
1.4 Cat.	F6B, F6D	54	02/1987 → 07/1990		70	12	054022604010	**MAN662**
1.6	LUC	66	12/1985 → 07/1990		55	12	054022384010	**MAN653**
1.6	LUC	66	01/1986 → 07/1990		70	12	054022604010	**MAN662**
1.6 D	LTC	40	12/1985 → 01/1989		55	12	054022581010	**MAN649**
1.6 D	LTC	40	02/1986 → 07/1988		55	12	063324145010	**MAN100**
1.6 D	LTC	40	04/1986 → 01/1989		55	12	063534892520	**MAN2035**
1.6 i	LJB	75	08/1989 → 07/1990		55	12	054022384010	**MAN653**
1.6 i	LRB	77	03/1986 → 07/1990		55	12	054022581010	**MAN649**
1.6 i	LJB	75	08/1989 → 07/1990		70	12	054022604010	**MAN662**
1.6 i	LRB	77	03/1986 → 07/1990		70	12	054022604010	**MAN662**
1.6 i Cat.	L4B	66	03/1986 → 07/1990		55	12	054022581010	**MAN649**
1.6 i Cat.	L4B	66	03/1986 → 07/1990		70	12	054022604010	**MAN662**
1.8 D	RTA, RTB	44	01/1989 → 07/1990		70	12	054022585010	**MAN652**
1.8 D	RTA, RTB	44	01/1989 → 07/1990		55	12	054022598010	**MAN666**
1.8 D	RTA, RTB	44	01/1989 → 07/1990		75	12	063532614010	**MAN2614**
ORION III (GAL)								
1.3	J4B, J6A	44	07/1990 → 12/1993		55	12	054022581010	**MAN649**
1.3	J4B, J6A	44	01/1992 → 12/1993		70	12	054022604010	**MAN662**
1.4	FUH	54	07/1990 → 12/1993		55	12	054022581010	**MAN649**
1.4	F6F, F6G	52	01/1992 → 12/1993		70	12	054022604010	**MAN662**
1.4	FUH	54	01/1992 → 12/1993		70	12	054022604010	**MAN662**
1.6	LUJ, LUK	66	07/1990 → 12/1992		55	12	054022581010	**MAN649**
1.6	LUJ, LUK	66	07/1990 → 12/1992		70	12	054022604010	**MAN662**

		kW		i	A	V	MAGNETI MARELLI LONG	MAGNETI MARELLI SHORT
FORD								
ORION III (GAL)								
1.6 i	LJF	77	07/1990 → 09/1992		70	12	054022604010	**MAN662**
1.6 i 16V	L1E, L1K	66	07/1992 → 12/1993		55	12	054022581010	**MAN649**
1.8 D	RTE, RTF, RTH	44	11/1990 → 12/1993		55	12	054022598010	**MAN666**
1.8 D	RTE, RTF, RTH	44	11/1990 → 12/1993		75	12	063532614010	**MAN2614**
1.8 TD	RFD, RFK	66	03/1993 → 12/1993		55	12	054022598010	**MAN666**
1.8 TD	RFD, RFK	66	09/1992 → 08/1993		75	12	063341695010	**MAN833**
P 100 I								
1.6	LCR	54	04/1982 → 12/1984		55	12	054022581010	**MAN649**
P 100 II								
2.0	NAE	57	11/1988 → 12/1992		55	12	054022581010	**MAN649**
2.0	NAE	57	01/1988 → 05/1993		55	12	063324145010	**MAN100**
SCORPIO I (GAE, GGE)								
1.8	REC	66	05/1985 → 01/1992		55	12	054022581010	**MAN649**
1.8	REC	66	04/1985 → 04/1987		55	12	063324145010	**MAN100**
2.0	N8D, NEL	77	05/1985 → 08/1989		55	12	054022581010	**MAN649**
2.0	N8A	80	01/1989 → 10/1992		70	12	054022585010	**MAN652**
2.0	N8D, NEL	77	04/1985 → 08/1989		55	12	063324145010	**MAN100**
2.0 i	NRA, NRI	85	05/1985 → 01/1992		55	12	054022581010	**MAN649**
2.0 i	NRC	74	10/1985 → 12/1990		55	12	054022581010	**MAN649**
2.0 i	NRA, NRI	85	04/1985 → 10/1989		55	12	063324145010	**MAN100**
2.8 i	PRE	110	04/1985 → 11/1986		55	12	054022581010	**MAN649**
2.8 i 4x4	PRE	110	10/1985 → 11/1986		55	12	054022581010	**MAN649**
SCORPIO I Tre volumi (GGE)								
1.8		66	09/1987 → 10/1988		55	12	054022581010	**MAN649**
2.0 i		92	05/1989 → 02/1992		70	12	054022585010	**MAN652**
SCORPIO II (GFR, GGR)								
2.9 i	BRG	110	01/1996 → 08/1998		90	12	063341343010	**MAN826**
2.9 i 24V	BOB	152	10/1994 → 07/1998		90	12	063341343010	**MAN826**
SCORPIO II Station wagon (GNR, GGR)								
2.9 i	BRG	110	01/1996 → 08/1998		90	12	063341343010	**MAN826**
2.9 i 24V	BOB	152	10/1994 → 07/1998		90	12	063341343010	**MAN826**
SIERRA (GBG, GB4)								
1.6	LSE	55	01/1987 → 02/1993		55	12	054022581010	**MAN649**
1.6	LSF	53	01/1988 → 02/1993		55	12	054022581010	**MAN649**
1.8	RED, REF	59	10/1987 → 12/1988		55	12	054022581010	**MAN649**
1.8	R2A, RED	66	01/1987 → 05/1988		55	12	054022598010	**MAN666**
1.8	R2A, RED	66	01/1987 → 05/1988	◎	55	12	063324145010	**MAN100**
1.8	R2C, R6A	64	07/1988 → 01/1993		55	12	063324145010	**MAN100**
1.8	RED, REF	59	10/1987 → 09/1989		55	12	063324145010	**MAN100**
2.0	N8C, NES	77	01/1987 → 02/1993		55	12	054022598010	**MAN666**
2.0	N8C, NES	77	01/1987 → 12/1990		55	12	063324145010	**MAN100**
2.0 4x4	N9C	92	01/1990 → 02/1993		70	12	054022585010	**MAN652**
2.0 4x4	N9C	88	01/1990 → 02/1993		70	12	054022585010	**MAN652**

		kW		i	A	V	LONG	SHORT
FORD								
SIERRA (GBG, GB4)								
2.0 i	NE5, NEJ	74	01/1987 → 12/1989		55	12	054022581010	**MAN649**
2.0 i	N4A, N4I	85	01/1987 → 02/1993		55	12	054022581010	**MAN649**
2.0 i	N9C	88	01/1990 → 02/1993		70	12	054022585010	**MAN652**
2.0 i Cat.	N4B	74	01/1987 → 02/1993		55	12	054022581010	**MAN649**
2.0 i DOHC	N9E	85	12/1991 → 01/1993		55	12	063324145010	**MAN100**
2.3 D	YTR, YTT	49	01/1987 → 09/1989		55	12	054022598010	**MAN666**
2.8 i	PR8	105	08/1987 → 12/1988		55	12	054022384010	**MAN653**
SIERRA 2 volumi /Coda spiovente (GBC)								
1.3	JCT	44	08/1982 → 12/1983		55	12	054022581010	**MAN649**
1.3	JCT	44	08/1982 → 12/1984		55	12	054022598010	**MAN666**
1.3	JCT	44	08/1982 → 12/1985		55	12	063324145010	**MAN100**
1.3	JCT	44	08/1982 → 10/1984		55	12	063534892520	**MAN2035**
1.6	LCS, LCT, LSD	55	08/1982 → 11/1984		55	12	063324145010	**MAN100**
1.6		51	10/1982 → 10/1984		55	12	063534892520	**MAN2035**
1.6		58	08/1984 → 12/1986		55	12	063534892520	**MAN2035**
1.6	LCS, LCT, LSD	55	08/1982 → 10/1984		55	12	063534892520	**MAN2035**
1.8	REB	66	10/1984 → 11/1984		55	12	063324145010	**MAN100**
1.8	REB	66	10/1984 → 10/1984		55	12	063534892520	**MAN2035**
2.0	NYT	66	08/1982 → 10/1984		55	12	054022384010	**MAN653**
2.0	NRD	74	10/1985 → 12/1986		55	12	054022581010	**MAN649**
2.0	NRD	74	10/1985 → 12/1986		55	12	063324145010	**MAN100**
2.0	NET	77	08/1982 → 11/1984		55	12	063324145010	**MAN100**
2.0	NYT	66	08/1982 → 10/1984		45	12	063324199010	**MAN107**
2.0	NET	77	08/1982 → 10/1984		55	12	063534892520	**MAN2035**
2.0 i	NR2, NRB	85	03/1985 → 12/1986		55	12	054022581010	**MAN649**
2.0 i	NR2, NRB	85	03/1985 → 12/1986		55	12	063324145010	**MAN100**
2.3	YYT	84	08/1982 → 12/1986		45	12	063324199010	**MAN107**
2.8 XR4i	PR5	107	08/1982 → 12/1985		55	12	054022384010	**MAN653**
2.8 XR4i	PR6	105	08/1982 → 12/1985		55	12	054022384010	**MAN653**
2.8 XR4i	PRT	110	08/1982 → 12/1985		55	12	054022384010	**MAN653**
SIERRA 2 volumi /Coda spiovente (GBC, GBG)								
1.6	LSF	53	01/1988 → 02/1993		55	12	054022581010	**MAN649**
1.6	LSE	55	01/1987 → 02/1993		55	12	054022581010	**MAN649**
1.6	LSE	55	01/1987 → 01/1993		55	12	063324145010	**MAN100**
1.8	RED, REF	59	10/1987 → 05/1988		55	12	054022581010	**MAN649**
1.8	R2A, RED	66	01/1987 → 05/1988		55	12	054022598010	**MAN666**
1.8	R2A, RED	66	01/1987 → 05/1988		55	12	063324145010	**MAN100**
1.8	RED, REF	59	10/1987 → 05/1988		55	12	063324145010	**MAN100**
1.8	R2C, R6A	64	07/1988 → 01/1993		55	12	063324145010	**MAN100**
2.0	N8C, NES	77	01/1987 → 02/1993		55	12	054022598010	**MAN666**
2.0	N8C, NES	77	01/1987 → 12/1990		55	12	063324145010	**MAN100**
2.0 i	N4A, N4I	85	01/1987 → 02/1993		55	12	054022581010	**MAN649**

		kW		i	A	V	LONG	SHORT
FORD								
SIERRA 2 volumi /Coda spiovente (GBC, GBG)								
2.0 i	N9C	88	06/1989 → 02/1993		70	12	054022585010	**MAN652**
2.0 i	N8A	80	06/1989 → 02/1993		70	12	054022585010	**MAN652**
2.0 i	NE5, NEJ	74	01/1987 → 02/1993		55	12	054022598010	**MAN666**
2.0 i	N9B	92	06/1989 → 02/1993		55	12	054022598010	**MAN666**
2.0 i	N4A, N4I	85	01/1987 → 12/1990		55	12	063324145010	**MAN100**
2.0 i Cat.	N4B	74	01/1987 → 02/1993		55	12	054022581010	**MAN649**
2.0 i Cat.	N4B	74	01/1987 → 01/1993		55	12	063324145010	**MAN100**
2.0 i DOHC	N9E	85	12/1991 → 01/1993		55	12	063324145010	**MAN100**
2.3 D	YTR	49	01/1987 → 09/1989		55	12	054022598010	**MAN666**
2.8 i	PR8	105	01/1987 → 12/1988		55	12	054022384010	**MAN653**
2.8 i XR 4x4	PR7	107	01/1987 → 12/1988		55	12	054022384010	**MAN653**
2.8 i XR 4x4	PRG	110	01/1987 → 08/1988		55	12	054022384010	**MAN653**
SIERRA Station wagon (BNC)								
1.6	LCS, LCT, LSD	55	08/1982 → 11/1984		55	12	063324145010	**MAN100**
1.6	LCS, LCT, LSD	55	08/1982 → 10/1984		55	12	063534892520	**MAN2035**
1.8	REB	66	10/1984 → 11/1984		55	12	063324145010	**MAN100**
1.8	REB	66	10/1984 → 10/1984		55	12	063534892520	**MAN2035**
2.0	NYT	66	08/1982 → 10/1984		55	12	054022384010	**MAN653**
2.0	NRD	74	10/1985 → 12/1986		55	12	054022581010	**MAN649**
2.0	NR2, NRB	85	03/1985 → 12/1986		55	12	054022581010	**MAN649**
2.0	NRD	74	10/1985 → 12/1986		55	12	063324145010	**MAN100**
2.0	NR2, NRB	85	03/1985 → 12/1986		55	12	063324145010	**MAN100**
2.0	NET	77	08/1982 → 11/1984		55	12	063324145010	**MAN100**
2.0	NYT	66	08/1982 → 10/1984		45	12	063324199010	**MAN107**
2.0	NET	77	08/1982 → 10/1984		55	12	063534892520	**MAN2035**
2.3	YYT	84	08/1982 → 12/1986		45	12	063324199010	**MAN107**
2.8 XR4i	PR5	107	08/1982 → 12/1985		55	12	054022384010	**MAN653**
2.8 XR4i	PR6	105	08/1982 → 12/1985		55	12	054022384010	**MAN653**
SIERRA Station wagon (BNG)								
1.6	LSE	55	01/1987 → 02/1993		55	12	054022581010	**MAN649**
1.6	LSF	53	01/1988 → 02/1993		55	12	054022581010	**MAN649**
1.6	LSE	55	01/1987 → 01/1993		55	12	063324145010	**MAN100**
1.8	R2A, RED	66	01/1987 → 05/1988		55	12	054022581010	**MAN649**
1.8	RED, REF	59	10/1987 → 05/1988		55	12	054022581010	**MAN649**
1.8	R2C, R6A	64	07/1988 → 01/1993		55	12	063324145010	**MAN100**
1.8	RED, REF	59	10/1987 → 05/1988		55	12	063324145010	**MAN100**
1.8	R2A, RED	66	01/1987 → 05/1988		55	12	063324145010	**MAN100**
2.0	N8C, NES	77	01/1987 → 02/1993		55	12	054022581010	**MAN649**
2.0	N8C, NES	77	01/1987 → 12/1990		55	12	063324145010	**MAN100**
2.0 4x4	N9C	92	05/1989 → 02/1993		70	12	054022585010	**MAN652**
2.0 i	NE5, NEJ	74	01/1987 → 02/1993		55	12	054022581010	**MAN649**
2.0 i	N9C	92	05/1989 → 02/1993		70	12	054022585010	**MAN652**

		kW		i	A	V	LONG	SHORT
FORD								
SIERRA Station wagon (BNG)								
2.0 i	N4A, N4I	85	01/1987 → 02/1993		55	12	054022598010	**MAN666**
2.0 i	N4A, N4I	85	01/1987 → 12/1990		55	12	063324145010	**MAN100**
2.0 i Cat.	N4B	74	01/1987 → 02/1993		55	12	054022581010	**MAN649**
2.0 i DOHC	N9E	85	12/1991 → 01/1993		55	12	063324145010	**MAN100**
2.8 4x4	PRG	110	01/1987 → 08/1988		55	12	054022384010	**MAN653**
2.8 i 4x4	PR7	107	01/1987 → 12/1988		55	12	054022384010	**MAN653**
STREET KA								
1.6	CDRA, CDRB	70	05/2003 → 07/2005		104	12	063380001010	**MAN8001**
TAUNUS (GBTS, GBFS, CBTS)								
1.3	JAC	40	12/1975 → 07/1979		55	12	054022581010	**MAN649**
1.3	JAC	40	05/1975 → 07/1979		55	12	063534892520	**MAN2035**
1.3 (CBTS)		40	09/1976 → 07/1979		55	12	054022581010	**MAN649**
1.6	LAD	50	12/1975 → 07/1979		55	12	054022581010	**MAN649**
1.6	LCJ	53	12/1975 → 07/1979		55	12	054022581010	**MAN649**
1.6	LE	65	08/1976 → 07/1979		55	12	054022581010	**MAN649**
1.6	LE	65	08/1976 → 07/1979	◎	55	12	063324145010	**MAN100**
1.6	LCJ	53	02/1976 → 07/1979		55	12	063324145010	**MAN100**
1.6	LAD	50	05/1975 → 07/1979	◎	55	12	063324145010	**MAN100**
1.6	LAD	50	05/1975 → 07/1979		55	12	063534892520	**MAN2035**
1.6	LCJ	53	05/1975 → 07/1979		55	12	063534892520	**MAN2035**
TAUNUS (GBTK)								
2000	NEG	72	12/1975 → 02/1976		55	12	054022581010	**MAN649**
2000	NEG	72	08/1973 → 02/1976		55	12	063324145010	**MAN100**
TAUNUS (GBTS, GBFS, CBTS)								
2.0	NYR	66	12/1975 → 07/1979		55	12	054022384010	**MAN653**
2.0	NYR	66	12/1975 → 07/1979		45	12	063324199010	**MAN107**
2.3	YYF	79	12/1975 → 07/1979		55	12	054022384010	**MAN653**
2.3	YYF	79	12/1975 → 07/1979		45	12	063324199010	**MAN107**
TAUNUS '80 (GBS, GBNS)								
1.6	LE	65	07/1979 → 07/1982		55	12	054022581010	**MAN649**
1.6	LE	65	07/1979 → 07/1982	◎	55	12	063324145010	**MAN100**
1.6	LAR	51	07/1979 → 07/1982		55	12	063324145010	**MAN100**
1.6	LCJ	54	07/1979 → 07/1982		55	12	063324145010	**MAN100**
2.0	NER	74	07/1979 → 07/1982		55	12	063324145010	**MAN100**
2.0	NWR	66	07/1979 → 07/1982		45	12	063324199010	**MAN107**
2.3	YYR	84	08/1979 → 07/1982		55	12	054022384010	**MAN653**
2.3	YYR	84	08/1979 → 07/1982		45	12	063324199010	**MAN107**
TAUNUS '80 Turnier (GBNS)								
1.3		46	07/1979 → 07/1982		55	12	054022581010	**MAN649**
1.6	LCJ	54	07/1979 → 07/1982		55	12	054022581010	**MAN649**
1.6	LAR	51	07/1979 → 07/1982		55	12	054022581010	**MAN649**
1.6	LCJ	54	07/1979 → 07/1982	◎	55	12	063324145010	**MAN100**

		kW			A	V	LONG	SHORT
FORD								
TAUNUS '80 Turnier (GBNS)								
1.6	LAR	51	07/1979 → 07/1982		55	12	063324145010	**MAN100**
2.0	NWR	66	08/1979 → 07/1981		55	12	054022384010	**MAN653**
2.0	NER	74	07/1979 → 07/1982		55	12	054022581010	**MAN649**
2.0	NER	74	07/1979 → 07/1982		55	12	063324145010	**MAN100**
2.0	NWR	66	08/1979 → 07/1981		45	12	063324199010	**MAN107**
2.3	YYR	84	08/1979 → 07/1982		55	12	054022384010	**MAN653**
2.3	YYR	84	08/1979 → 07/1982		45	12	063324199010	**MAN107**
TAUNUS Turnier (GBNS)								
1.3	JAC	43	12/1975 → 07/1979		55	12	054022581010	**MAN649**
1.3	JAC	43	05/1975 → 07/1979		55	12	063534892520	**MAN2035**
1.6	LAD	50	12/1975 → 07/1979		55	12	054022581010	**MAN649**
1.6	LCJ	53	12/1975 → 07/1979		55	12	054022581010	**MAN649**
1.6	LCJ	53	05/1975 → 07/1979		55	12	063324145010	**MAN100**
1.6	LAD	50	02/1976 → 07/1979		55	12	063324145010	**MAN100**
2.0	NYR	66	12/1975 → 07/1979		55	12	054022384010	**MAN653**
2.0	NEG, OHC TL 20 H	70	08/1976 → 07/1979		55	12	063324145010	**MAN100**
2.0	NYR	66	12/1975 → 07/1979		45	12	063324199010	**MAN107**
2.0	NYR	66	05/1975 → 07/1979		55	12	063534892520	**MAN2035**
2.3	YYF	79	12/1975 → 07/1979		55	12	054022384010	**MAN653**
2.3	YYF	79	12/1975 → 07/1979		45	12	063324199010	**MAN107**
TOURNEO CONNECT								
1.8 16V	EYPA, EYPC, EYPD	85	06/2002 →		124	12	063380008010	**MAN8008**
1.8 16V	EYPA, EYPC, EYPD	85	09/2002 →		75	12	063388502010	**MAN885**
1.8 Di	BHPA, P7PA, P7PB, R2PA	55	06/2002 →		124	12	063380009010	**MAN8009**
1.8 TDCi	RWPA	81	08/2006 →		124	12	063380009010	**MAN8009**
1.8 Turbo Di	HCPA, HCPB	66	06/2002 →		124	12	063380009010	**MAN8009**
1.8 Turbo Di	HCPA, HCPB	66	06/2002 →		124	12	063380010010	**MAN8010**
TRANSIT Autobus (72E, 73E)								
1.5 1000 (72E2A)		44	01/1971 → 05/1973		55	12	054022384010	**MAN653**
1.5 1100 (72000)		44	04/1971 → 07/1971		55	12	054022384010	**MAN653**
1.5 900 (7300)		44	01/1971 → 05/1973		55	12	054022384010	**MAN653**
1.7 FT 100 (72E2A)	EY	48	04/1971 → 03/1978		55	12	054022384010	**MAN653**
2.3 D FT 100 (72E2X)		46	11/1971 → 09/1978		55	12	063324145010	**MAN100**
TRANSIT Autobus (E_ _)								
2.0	NBA	66	09/1991 → 09/1994		55	12	054022581010	**MAN649**
2.0	NBA	66	09/1991 → 09/1994		90	12	063341345010	**MAN828**
2.0 (EBL, EBS, ECL, EDS, EDL, EGL, ESS, ESL, EUS)	NSF, NSG	84	09/1995 → 03/2000		90	12	063341345010	**MAN828**
2.0 i (EBL, EDL, EGL, ESS, EUS)	NCA	72	09/1991 → 04/1993		55	12	054022581010	**MAN649**
2.0 i (EBL, EDL, EGL, ESS, EUS)	NCA	72	09/1991 → 07/1994		90	12	063341345010	**MAN828**
2.5 DI (EBL, ECL, EDS, EDL)	4HB, 4HC	56	08/1994 → 05/1997		70	12	054022708010	**MAN1018**

		kW		i	A	V	LONG	SHORT
FORD								
TRANSIT Autobus (E_ _)								
2.5 DI (EBL, EDL, EDS, ESL, ESS)	4ED	85	08/1997 → 03/2000		70	12	054022708010	**MAN1018**
2.5 DI (EBL, EDS, ESL, ESS, EUS)	4FA, 4FB, 4FC, 4FD	51	08/1994 → 05/1997		70	12	054022708010	**MAN1018**
2.5 DI (EBS, EDS, EDL, ESS, EUS)	4BC, 4CC, 4FA	51	01/1992 → 07/1994		70	12	054022708010	**MAN1018**
2.5 DI (EBS, EDS, EGL, ESS, EUS)	4DA	59	01/1992 → 07/1994		70	12	054022708010	**MAN1018**
2.5 TD (EBL, EDL, EDS, EGL, ESL, ESS, EUS)	4GA, 4GB, 4GC, 4GD, 4GE, 4GF	63	01/1995 → 05/1997		70	12	054022708010	**MAN1018**
2.5 TD (EBS, EBL, ECL, EDS, EDL, ESS, EUS)	4GA, 4GB, 4GC	63	10/1992 → 07/1994		70	12	054022708010	**MAN1018**
2.5 TD (ECL, EDL, EDS, ESL, ESS, EUS)	4EB, 4EC	74	08/1994 → 05/1997		70	12	054022708010	**MAN1018**
2.5 TD (ECL, EDS, EDL, EGL, ESS, EUS)	4EA	74	09/1991 → 07/1994		70	12	054022708010	**MAN1018**
TRANSIT Autobus (FD_ _, FB_ _, FS_ _, FZ_ _, FC_ _)								
2.0 DI (F_E_, F_F_, F_G_)	D3FA	55	08/2000 → 05/2006		55	12	054022598010	**MAN666**
2.0 TDCi (F_F_, F_E_, F_G_)	FIFA	92	08/2002 → 07/2006		110	12	063533251000	**MAN2028**
2.4 DI (F_B_, F_C_, F_A_)	D2FA, D2FB, D2FE	66	01/2000 → 05/2006		124	12	063380007010	**MAN8007**
2.4 DI (F_B_, F_C_, F_A_)	D2FA, D2FB, D2FE	66	01/2000 → 07/2006		110	12	063533251000	**MAN2028**
2.4 DI (RWD) (F_B_, F_C_)	F4FA	55	01/2000 → 05/2006		124	12	063380007010	**MAN8007**
2.4 DI (RWD) (F_B_, F_C_)	F4FA	55	01/2000 → 09/2003		110	12	063533251000	**MAN2028**
2.4 DI (RWD) (F_B_, F_C_, F_A_)	D4FA	88	01/2000 → 05/2006		124	12	063380007010	**MAN8007**
2.4 DI (RWD) (F_B_, F_C_, F_A_)	D4FA	88	01/2000 → 07/2006		110	12	063533251000	**MAN2028**
2.4 TD	F4FA	55	08/2000 → 08/2003		124	12	063380007010	**MAN8007**
2.4 TDCi	H9FA	101	03/2004 → 05/2006		124	12	063380007010	**MAN8007**
2.4 TDCi	H9FA	101	03/2004 → 07/2006		110	12	063533251000	**MAN2028**
2.4 TDdi	D2FE	66	10/2001 → 03/2006		124	12	063380007010	**MAN8007**
2.4 TDdi	D4FA	88	08/2000 → 08/2003		124	12	063380007010	**MAN8007**
2.4 TDdi	D4FA	88	08/2000 → 08/2003		110	12	063533251000	**MAN2028**
2.4 TDdi	D2FE	66	10/2001 → 03/2006		110	12	063533251000	**MAN2028**
2.4 TDE	FXFA	85	03/2004 → 05/2006		124	12	063380007010	**MAN8007**
2.4 TDE	FXFA	85	03/2004 → 07/2006		110	12	063533251000	**MAN2028**
2.4 TDE (F_C_, F_B_, F_A_)	DOFA	92	07/2001 → 05/2006		124	12	063380007010	**MAN8007**
2.4 TDE (F_C_, F_B_, F_A_)	DOFA	92	07/2001 → 05/2006		110	12	063533251000	**MAN2028**
TRANSIT Autobus (T_ _)								
1.6 (TBL, TES)	LAT	46	12/1985 → 01/1989		55	12	054022598010	**MAN666**
2.0 (TBS, TCL, TCS) Cat.	N6T	57	01/1986 → 09/1992		55	12	054022581010	**MAN649**
2.0 (TBS, TCL, TCS) Cat.	N6T	57	12/1985 → 12/1991		55	12	054022598010	**MAN666**
2.0 (TBS, TCL, TCS) Cat.	N6T	57	01/1986 → 09/1992		55	12	063324145010	**MAN100**
2.0 (TBS, TCL, TCS, TEL, TES)	NAT, NAV	57	01/1986 → 09/1992		55	12	054022581010	**MAN649**
2.0 (TBS, TCL, TCS, TEL, TES)	NAT, NAV	57	11/1985 → 12/1991		55	12	054022598010	**MAN666**
2.0 (TBS, TCL, TCS, TEL, TES)	NAT, NAV	57	01/1986 → 09/1992		55	12	063324145010	**MAN100**

		kW		i	A	V	MAGNETI MARELLI LONG	MAGNETI MARELLI SHORT
FORD								
TRANSIT Autobus (T_ _)								
2.5 D (TBS, TCL, TCS, TEL, TES)	4AB	50	12/1985 → 01/1989		55	12	054022581010	**MAN649**
2.5 D (TBS, TCL, TCS, TEL, TES)	4AB	50	01/1986 → 01/1989		70	12	063324264010	**MAN139**
2.5 D (TBS, TCL, TCS, TEL, TES)	4AB	50	01/1988 → 01/1989		70	12	063324293010	**MAN1023**
2.5 D (TBS, TEL, TES)	4AB, 4BA, 4CA	52	09/1988 → 09/1992		55	12	054022581010	**MAN649**
2.5 D (TBS, TEL, TES)	4AB, 4BA, 4CA	52	09/1988 → 09/1992		70	12	063324293010	**MAN1023**
TRANSIT Autobus (V_ _)								
1.6 (VAS, VLS, VZS)	4RB	48	01/1978 → 10/1985		55	12	063324145010	**MAN100**
2.0 (VAS, VIL, VLS, VUL, VZS)	4RC	57	01/1985 → 10/1986		55	12	054022598010	**MAN666**
2.0 (VAS, VIL, VLS, VUL, VZS)	4RC	57	11/1977 → 10/1986		55	12	063324145010	**MAN100**
2.0 (VAS, VLS, VZS)	4RC	55	01/1980 → 12/1985		55	12	054022581010	**MAN649**
2.0 (VAS, VLS, VZS)	4RC	55	01/1985 → 10/1986		55	12	054022598010	**MAN666**
2.0 (VAS, VLS, VZS)	4RC	55	01/1978 → 12/1985		55	12	063324145010	**MAN100**
2.4 D (VAS, VBL, VIL, VUL, VZS)	4AA	46	04/1980 → 05/1984		55	12	054022384010	**MAN653**
2.4 D (VAS, VBL, VIL, VUL, VZS)	4AA	46	12/1977 → 10/1986		55	12	063534892520	**MAN2035**
2.5 D (VAS, VBL, VIL, VUL, VZS)	4AB	50	10/1983 → 02/1986		55	12	054022384010	**MAN653**
TRANSIT CONNECT (P65_, P70_, P80_)								
1.8 16V	EYPA, EYPC, EYPD	85	06/2002 →		124	12	063380008010	**MAN8008**
1.8 Di	BHPA, P7PA, P7PB, R2PA	55	06/2002 →		124	12	063380009010	**MAN8009**
1.8 TDCi	HCPA, HCPB	66	06/2002 →	👁	124	12	063380009010	**MAN8009**
1.8 TDCi	RWPA	81	08/2006 →		124	12	063380009010	**MAN8009**
1.8 TDCi	HCPA, HCPB	66	06/2002 →	👁	124	12	063380010010	**MAN8010**
TRANSIT Furgonato (72E, 71E)								
1.5 (72E1A)	EX	44	01/1971 → 05/1973		55	12	054022384010	**MAN653**
1.7 FT 100	EY	48	04/1971 → 03/1978		55	12	054022384010	**MAN653**
TRANSIT Furgonato (E_ _)								
2.0	NBA	66	09/1991 → 04/1993		55	12	054022581010	**MAN649**
2.0	NBA	66	09/1991 → 06/1994		90	12	063341345010	**MAN828**
2.0 (EAL, EAS)	NSF, NSG	84	08/1994 → 03/2000		90	12	063341345010	**MAN828**
2.0 i (EAL, EAS)	NCA	72	09/1991 → 04/1993		55	12	054022581010	**MAN649**
2.0 i (EAL, EAS)	NCA	72	09/1991 → 06/1994		90	12	063341345010	**MAN828**
2.5 DI (EAL, EAS)	4GA	63	10/1992 → 06/1994		70	12	054022708010	**MAN1018**
2.5 DI (EAL, EAS)	4BC, 4CC, 4FA	51	01/1992 → 06/1994		70	12	054022708010	**MAN1018**
2.5 DI (EAL, EAS)	4FA, 4FB, 4FC, 4FD	51	06/1994 → 03/2000		70	12	054022708010	**MAN1018**
2.5 DI (EAL, EAS)	4ED	85	05/1999 → 03/2000		70	12	054022708010	**MAN1018**
2.5 DI (EAL, EAS)	4HB, 4HC	56	06/1994 → 03/2000		70	12	054022708010	**MAN1018**
2.5 DI (EAS, EAL)	4DA	59	01/1992 → 06/1994		70	12	054022708010	**MAN1018**
2.5 TD (EAL, EAS)	4GA, 4GB, 4GC, 4GD, 4GE, 4GF	63	08/1994 → 05/1997		70	12	054022708010	**MAN1018**

		kW			A	V	LONG	SHORT
FORD								
TRANSIT Furgonato (E_ _)								
2.5 TD (EAS, EAL)	4EA	74	05/1991 → 06/1994		70	12	054022708010	**MAN1018**
2.5 TDI (EAL, EAS)	4EB, 4EC	74	08/1994 → 05/1997		70	12	054022708010	**MAN1018**
TRANSIT Furgonato (FA_ _)								
2.0 DI (FAE_, FAF_, FAG_)	D3FA	55	08/2000 → 05/2006		55	12	054022598010	**MAN666**
2.0 TDCi	FIFA	92	08/2002 → 07/2006		110	12	063533251000	**MAN2028**
2.4 DI (FAA_, FAB_, FAC_, FAD_)	D2FA, D2FB, D2FE	66	01/2000 → 05/2006		124	12	063380007010	**MAN8007**
2.4 DI (FAA_, FAB_, FAC_, FAD_)	D2FA, D2FB, D2FE	66	01/2000 → 07/2006		110	12	063533251000	**MAN2028**
2.4 DI (RWD) (FAA_, FAB_, FAC_, FAD_)	F4FA	55	01/2000 → 05/2006		124	12	063380007010	**MAN8007**
2.4 DI (RWD) (FAA_, FAB_, FAC_, FAD_)	F4FA	55	01/2000 → 09/2003		110	12	063533251000	**MAN2028**
2.4 DI (RWD) (FAA_, FAB_, FAC_, FAD_)		88	01/2000 → 05/2006		124	12	063380007010	**MAN8007**
2.4 DI (RWD) (FAA_, FAB_, FAC_, FAD_)		88	01/2000 → 07/2006		110	12	063533251000	**MAN2028**
2.4 TD	F4FA	55	08/2000 → 08/2003		124	12	063380007010	**MAN8007**
2.4 TD 4 ruote motrici	F4FA	55	08/2000 → 08/2003		124	12	063380007010	**MAN8007**
2.4 TDCi	H9FA	101	03/2004 → 05/2006		124	12	063380007010	**MAN8007**
2.4 TDCi	H9FA	101	03/2004 → 07/2006		110	12	063533251000	**MAN2028**
2.4 TDdi		88	08/2000 → 08/2003		124	12	063380007010	**MAN8007**
2.4 TDdi		66	10/2000 → 03/2006		124	12	063380007010	**MAN8007**
2.4 TDdi	D4FA	88	08/2000 → 08/2003		124	12	063380007010	**MAN8007**
2.4 TDdi	D4FA	88	08/2000 → 08/2003		110	12	063533251000	**MAN2028**
2.4 TDE	DOFA	92	07/2001 → 05/2006		124	12	063380007010	**MAN8007**
2.4 TDE	DOFA	92	07/2001 → 05/2006		110	12	063533251000	**MAN2028**
2.4 TDE	FXFA	85	03/2004 → 05/2006		124	12	063380007010	**MAN8007**
2.4 TDE	FXFA	85	03/2004 → 07/2006		110	12	063533251000	**MAN2028**
TRANSIT Furgonato (T_ _)								
1.6 (TAS)	LAT	46	01/1986 → 07/1991		55	12	054022581010	**MAN649**
1.6 (TAS)	LAT	46	09/1985 → 09/1992		55	12	054022598010	**MAN666**
1.6 (TAS)	LAT	46	01/1986 → 09/1992		55	12	063324145010	**MAN100**
2.0 (TAL, TAS, TGL, TWS)	NAT, NAV	57	01/1986 → 07/1991		55	12	054022581010	**MAN649**
2.0 (TAL, TAS, TGL, TWS)	NAT, NAV	57	09/1985 → 12/1991		55	12	054022598010	**MAN666**
2.0 (TAL, TAS, TGL, TWS)	NAT, NAV	57	01/1986 → 09/1992		55	12	063324145010	**MAN100**
2.5 D (TAL, TAS, TGL, TWS)	4AB	50	01/1986 → 09/1991		55	12	054022581010	**MAN649**
2.5 D (TAL, TAS, TGL, TWS)	4AB	50	01/1986 → 09/1991		70	12	063324264010	**MAN139**
2.5 D (TAL, TAS, TGL, TWS)	4AB	50	01/1988 → 09/1991		70	12	063324293010	**MAN1023**
2.5 D (TAL, TAS, TGL, TWS)	4BA, 4CA	52	10/1988 → 09/1991		55	12	054022581010	**MAN649**
2.5 D (TAL, TAS, TGL, TWS)	4BA, 4CA	52	10/1988 → 09/1991		70	12	063324293010	**MAN1023**
TRANSIT Furgonato (V_ _)								
1.6 (WS)	4RB	48	01/1980 → 12/1985		55	12	054022581010	**MAN649**
1.6 (WS)	4RB	48	01/1978 → 10/1985		55	12	063324145010	**MAN100**
2.0 (VHL, VVS)	4RC	57	01/1980 → 12/1985		55	12	054022581010	**MAN649**
2.0 (VHL, VVS)	4RC	57	01/1985 → 10/1986		55	12	054022598010	**MAN666**
2.0 (VHL, VVS)	4RC	57	11/1977 → 10/1986		55	12	063324145010	**MAN100**

		kW			A	V	LONG	SHORT
FORD								
TRANSIT Furgonato (V_ _)								
2.0 (VVL)	4RC	55	01/1980 → 12/1985		55	12	054022581010	**MAN649**
2.0 (VVL)	4RC	55	01/1985 → 10/1986		55	12	054022598010	**MAN666**
2.4 D (VVS)	4AA	46	04/1980 → 05/1984		55	12	054022384010	**MAN653**
2.5 D (VVL)	4AB	50	01/1984 → 10/1986		55	12	054022384010	**MAN653**
2.5 D (VVL)	4AB	50	01/1985 → 10/1986		55	12	054022581010	**MAN649**
TRANSIT Pianale piatto/Telaio (74E)								
1.5	EX	44	01/1971 → 05/1973		55	12	054022384010	**MAN653**
1.7 FT 100	EY	48	04/1971 → 03/1978		55	12	054022384010	**MAN653**
TRANSIT Pianale piatto/Telaio (E_ _)								
2.0 (EME/L/S, ENE/L/S)	NCA	72	09/1991 → 04/1993		55	12	054022581010	**MAN649**
2.0 (EME/L/S, ENE/L/S)	NCA	72	09/1991 → 08/1994		90	12	063341345010	**MAN828**
2.0 (EME/L/S, ENE/L/S)	NSF, NSG	84	08/1994 → 03/2000		90	12	063341345010	**MAN828**
2.5 DI (EML/S, ENL/S)	4BC, 4CC, 4FA	51	01/1992 → 08/1994		70	12	054022708010	**MAN1018**
2.5 DI (EME/L/S, ENE/L/S)	4DA	59	01/1992 → 08/1994		70	12	054022708010	**MAN1018**
2.5 DI (EML, ENE/L)	4ED	85	05/1999 → 03/2000		70	12	054022708010	**MAN1018**
2.5 DI (EML/S, ENL/S)	4FA, 4FB, 4FC, 4FD	51	08/1994 → 03/2000		70	12	054022708010	**MAN1018**
2.5 DI (EME/L/S, ENE/L/S)	4HB, 4HC	56	08/1994 → 03/2000		70	12	054022708010	**MAN1018**
2.5 TD (EME/L/S, ENE/L)	4EA	74	09/1991 → 08/1994		70	12	054022708010	**MAN1018**
2.5 TD (EME/L/S, ENE/L/S)	4EB, 4EC	74	08/1994 → 05/1997		70	12	054022708010	**MAN1018**
2.5 TD (EME/L/S, ENE/L/S)	4GA	63	11/1992 → 08/1994		70	12	054022708010	**MAN1018**
2.5 TD (EME/L/S, ENE/L/S)	4GA, 4GB, 4GC, 4GD, 4GE, 4GF	63	08/1994 → 05/1997		70	12	054022708010	**MAN1018**
TRANSIT Pianale piatto/Telaio (FM_ _, FN_ _)								
2.0 TDCi (F_E_, F_F_)	FIFA	92	08/2002 → 07/2006		110	12	063533251000	**MAN2028**
2.4 DI (F_A_, F_B_, F_C_, F_D_)	D2FA, D2FB, D2FE	66	01/2000 → 05/2006		124	12	063380007010	**MAN8007**
2.4 DI (F_A_, F_B_, F_C_, F_D_)	D2FA, D2FB, D2FE	66	01/2000 → 07/2006		110	12	063533251000	**MAN2028**
2.4 DI (F_A_, F_B_, F_C_, F_D_)	D4FA	88	01/2000 → 05/2006		124	12	063380007010	**MAN8007**
2.4 DI (F_A_, F_B_, F_C_, F_D_)	D4FA	88	01/2000 → 07/2006		110	12	063533251000	**MAN2028**
2.4 DI (F_A_, F_B_, F_C_, F_D_)	F4FA	55	01/2000 → 05/2006		124	12	063380007010	**MAN8007**
2.4 DI (F_A_, F_B_, F_C_, F_D_)	F4FA	55	01/2000 → 09/2003		110	12	063533251000	**MAN2028**
2.4 TDCi	H9FA	101	03/2004 → 05/2006		124	12	063380007010	**MAN8007**
2.4 TDCi	H9FA	101	03/2004 → 07/2006		110	12	063533251000	**MAN2028**
2.4 TDdi	D4FA	88	08/2000 → 08/2003		124	12	063380007010	**MAN8007**
2.4 TDdi	D4FA	88	08/2000 → 08/2003		110	12	063533251000	**MAN2028**
2.4 TDE	DOFA	92	07/2001 → 05/2006		124	12	063380007010	**MAN8007**
2.4 TDE	DOFA	92	07/2001 → 05/2006		110	12	063533251000	**MAN2028**
2.4 TDE	FXFA	85	03/2004 → 05/2006		124	12	063380007010	**MAN8007**
2.4 TDE	FXFA	85	03/2004 → 07/2006		110	12	063533251000	**MAN2028**
TRANSIT Pianale piatto/Telaio (T_ _)								
2.0 (TTE, TTL, TTS)	NAT, NAV	57	01/1986 → 12/1991		55	12	054022581010	**MAN649**
2.0 (TTE, TTL, TTS)	NAT, NAV	57	01/1986 → 12/1991		55	12	054022598010	**MAN666**

		kW			A	V	LONG	SHORT
FORD								
TRANSIT Pianale piatto/Telaio (T_ _)								
2.0 (TTE, TTL, TTS)	NAT, NAV	57	01/1986 → 09/1992		55	12	063324145010	**MAN100**
2.0 (TUL) Cat.	N6T	57	10/1988 → 07/1991		55	12	054022581010	**MAN649**
2.0 (TUL) Cat.	N6T	57	11/1985 → 12/1991		55	12	054022598010	**MAN666**
2.0 (TUL) Cat.	N6T	57	01/1986 → 09/1992		55	12	063324145010	**MAN100**
2.5 D (TTL, TTS, TUL, TUS, TTE) Cat.	4AB	50	01/1986 → 01/1989		55	12	054022581010	**MAN649**
2.5 D (TTL, TTS, TUL, TUS, TTE) Cat.	4AB	50	01/1986 → 01/1989		70	12	063324264010	**MAN139**
2.5 D (TTL, TTS, TUL, TUS, TTE) Cat.	4AB	50	01/1988 → 01/1989		70	12	063324293010	**MAN1023**
2.5 DI (TTE, TTL, TTS, TUL)	4BA, 4CA	52	09/1988 → 09/1992		55	12	054022581010	**MAN649**
2.5 DI (TTE, TTL, TTS, TUL)	4BA, 4CA	52	09/1988 → 12/1991		70	12	063324264010	**MAN139**
2.5 DI (TTE, TTL, TTS, TUL)	4BA, 4CA	52	09/1988 → 09/1992		70	12	063324293010	**MAN1023**
TRANSIT Pianale piatto/Telaio (V_ _)								
1.6 (VCS, VDS)	B	48	01/1980 → 12/1985		55	12	054022581010	**MAN649**
2.0 (VGL, VSL, VTL, VCS, VDS)	4RC	57	01/1980 → 12/1985		55	12	054022581010	**MAN649**
2.0 (VGL, VSL, VTL, VCS, VDS)	4RC	57	01/1985 → 10/1986		55	12	054022598010	**MAN666**
2.4 D (VGL, VSL, VTL, VCS, VDS)	4AA	46	04/1980 → 05/1984		55	12	054022384010	**MAN653**
2.5 D (VGL, VSL, VTL, VCS, VDS)	4AB	50	01/1984 → 10/1986		55	12	054022384010	**MAN653**
2.5 D (VGL, VSL, VTL, VCS, VDS)	4AB	50	01/1985 → 10/1986		55	12	054022581010	**MAN649**
TRANSIT TOURNEO								
2.0	NSH	84	11/1994 → 12/2000		90	12	063341345010	**MAN828**
2.5 DI	4HA, 4HB, 4HC	56	11/1994 → 05/1997		70	12	054022708010	**MAN1018**
2.5 DI	4FA, 4FB, 4FC, 4FD	51	11/1994 → 05/1997		70	12	054022708010	**MAN1018**
2.5 TD	4GA, 4GB, 4GC	63	11/1994 → 05/1997		70	12	054022708010	**MAN1018**
FORD AUSTRALIA								
FOCUS 2 volumi /Coda spiovente (LR)								
1.8 i	EYDE	85	09/2002 → 08/2004		80	12	063377409010	**MAN7409**
2.0 i	EDDB	96	09/2002 → 08/2004		80	12	063377409010	**MAN7409**
FOCUS 2 volumi /Coda spiovente (LT)								
2.0 i	AODB	107	05/2005 → 03/2009		150	12	063377420010	**MAN7420**
2.0 TDCi		100	04/2007 → 03/2009		150	12	063377416010	**MAN7416**
FOCUS Tre volumi (LR)								
2.0 i	EDDB	96	09/2002 → 08/2004		80	12	063377409010	**MAN7409**
GEELY								
MR 2 volumi /Coda spiovente								
1.5	MR479QA	69	09/2005 →		70	12	063532612010	**MAN2612**
HYUNDAI								
ACCENT I (X-3)								
1.3	G4EH	55	10/1994 → 01/2000		90	12	063532611010	**MAN2611**
1.3	G4EH	44	10/1994 → 01/2000		90	12	063532611010	**MAN2611**

		kW			A	V	LONG	SHORT
HYUNDAI								
ACCENT I (X-3)								
1.3	G4EH	44	10/1994 → 01/2000		75	12	063532614010	**MAN2614**
1.3 i 12V	G4EH	62	10/1994 → 01/2000		90	12	063532611010	**MAN2611**
1.5 i 12V	G4EK	65	10/1994 → 01/2000		75	12	063532614010	**MAN2614**
1.5 i 16V	G4ER	73	12/1995 → 01/2000		90	12	063532611010	**MAN2611**
ACCENT II (LC)								
1.3	G4E-A	55	01/2000 →		90	12	063532602010	**MAN2602**
1.3		61	01/2000 →		90	12	063532602010	**MAN2602**
1.5	G4EB	66	01/2000 →		90	12	063532602010	**MAN2602**
ACCENT Tre volumi (LC)								
1.3	G4E-A	55	01/2000 → 11/2005		90	12	063532602010	**MAN2602**
1.5	G4EB	66	01/2000 → 11/2005		90	12	063532602010	**MAN2602**
ACCENT Tre volumi (X-3)								
1.3	G4EH	44	10/1994 → 01/2000		90	12	063532611010	**MAN2611**
1.3	G4EH	55	10/1994 → 01/2000		90	12	063532611010	**MAN2611**
1.3 i 12V	G4EH	62	10/1994 → 01/2000		90	12	063532611010	**MAN2611**
1.5 i 16V	G4ER	73	10/1995 → 01/2000		90	12	063532611010	**MAN2611**
ATOS (MX)								
1.0 i	G4HC	40	02/1998 → 09/2001		60	12	063532613010	**MAN2613**
1.0 i	G4HC-E	43	03/2001 →		70	12	063532612010	**MAN2612**
1.0 i	G4HC-E	43	03/2001 →		60	12	063532613010	**MAN2613**
1.1	G4HG	46	03/2004 →		70	12	063532612010	**MAN2612**
ATOS PRIME (MX)								
1.0 i	G4HC	40	08/1999 →		70	12	063532612010	**MAN2612**
1.0 i	G4HC	40	08/1999 → 09/2001		60	12	063532613010	**MAN2613**
1.0 i	G4HC-E	43	03/2001 →		70	12	063532612010	**MAN2612**
1.0 i	G4HC-E	43	03/2001 →		60	12	063532613010	**MAN2613**
1.1	G4HD	43	06/2003 →		70	12	063532612010	**MAN2612**
COUPE (RD)								
1.6 16V	G4GR	85	03/1998 → 04/2002		90	12	063532611010	**MAN2611**
1.6 i 16V	4G61	84	12/1996 → 04/2002		90	12	063532611010	**MAN2611**
2.0 16V	G4GF	102	08/1996 → 04/2002		90	12	063532611010	**MAN2611**
ELANTRA (XD)								
1.6	G4ED-G	79	06/2000 →		90	12	063532602010	**MAN2602**
1.8	G4BB	97	06/2000 →		90	12	063532602010	**MAN2602**
2.0 CRDi	D4EA	83	04/2001 →		120	12	063532622010	**MAN2622**
ELANTRA Tre volumi (XD)								
1.6	G4ED-G	79	06/2000 →		90	12	063532602010	**MAN2602**
1.8	G4BB	97	06/2000 →		90	12	063532602010	**MAN2602**
2.0 CRDi	D4EA	83	04/2001 →		120	12	063532622010	**MAN2622**
GALLOPER II (JK-01)								
2.5 TD	D4BA	65	08/1998 → 11/2000		90	12	063532606010	**MAN2606**
2.5 TD	D4BA	65	08/1998 → 10/2000		65	12	063532625010	**MAN2625**
2.5 TD intercooler	D4BH	73	08/1998 →		90	12	063532606010	**MAN2606**

		kW		i	A	V	LONG	SHORT
HYUNDAI								
GETZ (TB)								
1.1	G4HD	49	09/2005 →		70	12	063532612010	**MAN2612**
1.1	G4HD	46	09/2002 →		70	12	063532612010	**MAN2612**
1.3	G4E-A	63	09/2003 →		90	12	063532602010	**MAN2602**
1.6	G4ED-G	77	04/2003 →		90	12	063532602010	**MAN2602**
H-1 Autobus (KMF)								
2.5 D		57	10/1997 →		110	12	063532608010	**MAN2608**
2.5 D		57	10/1997 →		75	12	063532609010	**MAN2609**
2.5 TD	D4BF	59	10/1997 →		110	12	063532608010	**MAN2608**
2.5 TD	D4BF	59	10/1997 →		75	12	063532609010	**MAN2609**
2.5 TD	D4BH	73	10/1999 → 11/2001		75	12	063532609010	**MAN2609**
2.5 TD	D4BH	74	11/2001 →		75	12	063532609010	**MAN2609**
2.5 TD 4WD		73	03/2001 →		75	12	063532609010	**MAN2609**
2.5 TD 4WD		74	11/2001 →		75	12	063532609010	**MAN2609**
H-1 Furgonato								
2.5 TD	D4BF	59	03/2000 → 09/2000		110	12	063532608010	**MAN2608**
2.5 TD	D4BF	59	03/2000 → 09/2000		75	12	063532609010	**MAN2609**
2.5 TD	D4BH	73	03/2000 →		110	12	063532608010	**MAN2608**
2.5 TD	D4BH	74	10/2001 →		75	12	063532609010	**MAN2609**
2.5 TD	D4BH	73	03/2000 →		75	12	063532609010	**MAN2609**
H-1 Pianale piatto/Telaio								
2.5 D	D4BH	73	06/2000 → 10/2005		75	12	063532609010	**MAN2609**
H100 Autobus (P)								
2.5 D	D4BA, D4BX	55	07/1993 → 12/1994		75	12	063532603010	**MAN2603**
2.5 D	D4BA, D4BX	55	07/1993 → 12/1994		65	12	063532605010	**MAN2605**
2.5 D		57	06/1998 → 03/2000		75	12	063532603010	**MAN2603**
2.5 D		57	12/1994 → 03/2000		65	12	063532604010	**MAN2604**
2.5 TD	D4BF	59	07/1993 → 03/2000		75	12	063532603010	**MAN2603**
2.5 TD	D4BF	59	07/1993 → 03/2000		65	12	063532605010	**MAN2605**
2.6 D		57	10/1999 →		75	12	063532603010	**MAN2603**
H100 Furgonato								
2.5 D	D4BA, D4BX	55	07/1993 → 12/1994		75	12	063532603010	**MAN2603**
2.5 D	D4BA, D4BX	55	07/1993 → 12/1994		65	12	063532605010	**MAN2605**
2.5 D		57	06/1998 → 03/2000		75	12	063532603010	**MAN2603**
2.5 D		57	12/1994 → 03/2000		65	12	063532604010	**MAN2604**
2.5 D		57	12/1994 → 03/2000		65	12	063532605010	**MAN2605**
2.6 D		57	10/1999 →		75	12	063532603010	**MAN2603**
LANTRA I (J-1)								
1.6 i.e. 16V	G4CR	84	10/1990 → 11/1995		75	12	063532615010	**MAN2615**
1.6 i.e. 16V	G4CR	78	10/1990 → 11/1995		75	12	063532615010	**MAN2615**
1.6 i.e. 16V	G4CR	78	10/1990 → 11/1995		90	12	063532623010	**MAN2623**
1.6 i.e. 16V	G4CR	84	10/1990 → 11/1995		90	12	063532623010	**MAN2623**
1.8 i.e. 16V	G4CN	93	10/1990 → 11/1995		75	12	063532615010	**MAN2615**
1.8 i.e. 16V	G4CN	93	10/1990 → 11/1995		90	12	063532623010	**MAN2623**

		kW			A	V	LONG	SHORT
HYUNDAI								
LANTRA II (J-2)								
1.5 12V	G4EK	65	12/1996 → 09/2000		90	12	063532611010	**MAN2611**
1.5 12V	G4EK	65	12/1996 → 09/2000		75	12	063532614010	**MAN2614**
1.6 16V	4G61	84	11/1995 → 09/2000		90	12	063532611010	**MAN2611**
1.6 i	G4GR	66	11/1995 → 09/2000		90	12	063532611010	**MAN2611**
1.8 16V	G4GM	94	11/1995 → 09/2000		90	12	063532611010	**MAN2611**
2.0 16V	G4GF	102	08/1996 → 09/2000		90	12	063532611010	**MAN2611**
LANTRA II Wagon (J-2)								
1.6 16V	4G61	84	02/1996 →		90	12	063532611010	**MAN2611**
1.6 i	G4GR	66	02/1996 →		90	12	063532611010	**MAN2611**
1.8 16V	G4GM	94	02/1996 →		90	12	063532611010	**MAN2611**
2.0 16V	G4GF	102	12/1996 →		90	12	063532611010	**MAN2611**
MATRIX (FC)								
1.6	G4ED-G	76	06/2001 →		90	12	063532602010	**MAN2602**
1.8	G4GB-G	90	06/2001 →		90	12	063532602010	**MAN2602**
S COUPE (SLC)								
1.5 i Turbo	G4EK-TC	85	04/1991 → 05/1996		75	12	063532614010	**MAN2614**
SANTA FE (SM)								
2.0 CRDi	D4EA	83	08/2001 →		120	12	063532622010	**MAN2622**
2.0 CRDi 4x4	D4EA	83	04/2001 →		120	12	063532622010	**MAN2622**
2.0 CRDi 4x4	D4EA	92	08/2003 →		120	12	063532622010	**MAN2622**
SANTAMO								
2.0 16V		102	05/1999 →		75	12	063532615010	**MAN2615**
2.0 16V		102	05/1999 →		90	12	063532623010	**MAN2623**
2.0 16V 4x4		102	05/1999 →		75	12	063532615010	**MAN2615**
2.0 16V 4x4		102	05/1999 →		90	12	063532623010	**MAN2623**
SONATA II (Y-2)								
2.0 i 16V	G4CP-D	96	01/1991 → 10/1993		90	12	063532623010	**MAN2623**
3.0 i V6	G6AT	107	01/1991 → 10/1993		90	12	063532623010	**MAN2623**
SONATA III (Y-3)								
1.8 i		72	05/1993 → 06/1998		75	12	063532615010	**MAN2615**
1.8 i		72	05/1993 → 06/1998		90	12	063532623010	**MAN2623**
2.0 i	G4CP	77	06/1994 → 08/1996		75	12	063532615010	**MAN2615**
2.0 i	G4CP	77	06/1994 → 08/1996		90	12	063532623010	**MAN2623**
2.0 i		70	08/1996 → 06/1998		75	12	063532615010	**MAN2615**
2.0 i 16V	G4CP-D	102	05/1993 → 06/1998		75	12	063532615010	**MAN2615**
2.0 i 16V	G4CP-D	102	05/1993 → 06/1998		90	12	063532623010	**MAN2623**
2.0 i 16V	G4CP-DM	92	06/1996 → 06/1998		75	12	063532615010	**MAN2615**
2.0 i 16V	G4CP-DM	92	06/1996 → 06/1998		90	12	063532623010	**MAN2623**
SONATA VI (YF)								
2.0 16V		106	10/2001 → 11/2004		90	12	063532623010	**MAN2623**
STAREX (H1)								
2.5 TCi	D4BH	73	10/1997 → 04/2004		110	12	063532608010	**MAN2608**
2.5 TCi	D4BH	73	10/1997 → 04/2004		75	12	063532609010	**MAN2609**
2.5 TD	D4BF	59	06/1997 →		110	12	063532608010	**MAN2608**

		kW		i	A	V	MAGNETI MARELLI LONG	MAGNETI MARELLI SHORT
HYUNDAI								
STAREX (H1)								
2.5 TD	D4BF	59	06/1997 →		75	12	063532609010	**MAN2609**
2.5 TD 4WD	D4BF	59	02/1998 →		110	12	063532608010	**MAN2608**
2.5 TD 4WD	D4BF	59	02/1998 →		75	12	063532609010	**MAN2609**
TERRACAN (HP)								
2.9 CRDi 4WD		110	12/2001 →		110	12	063532601010	**MAN2601**
2.9 CRDi 4WD	J3	120	11/2003 →		110	12	063532624010	**MAN2624**
3.5 i V6 4WD	G6CU	143	02/2004 →		120	12	063532618010	**MAN2618**
3.5 i V6 4WD	G6CU	147	02/2004 →		120	12	063532618010	**MAN2618**
TRAJET (FO)								
2.0	G4JP-G	100	03/2000 →		90	12	063532602010	**MAN2602**
2.0 CRDi	D4EA	83	04/2001 →		120	12	063532622010	**MAN2622**
TUCSON (JM)								
2.0	G4GC	104	08/2004 →		90	12	063532602010	**MAN2602**
2.0 CRDi	D4EA	83	08/2004 →		120	12	063532622010	**MAN2622**
2.0 CRDi 4 ruote motrici	D4EA	83	08/2004 →		120	12	063532622010	**MAN2622**
INNOCENTI								
ELBA (146)								
1.4 i.e. (146EN, 146EQ)	146 C5.000, 146 D5.000	49	09/1994 → 12/1996		65	12	063321157010	**MAN322**
1.6 i.e. (146EO, 146ER)	146 C6.000, 146 D6.000	55	09/1994 → 12/1996		65	12	063321157010	**MAN322**
1.7 D (146DI, 146EI)	146 B2.000	42	08/1991 → 12/1996		55	12	063321409010	**MAN909**
MINI								
1.0		39	05/1974 → 12/1976		55	12	054022384010	**MAN653**
IVECO								
DAILY I Autobus								
A 40-10 (94139111, 94139131, 94139311, 94139315, 94139317, ..)	8140.27.2720	76	01/1991 → 12/1996		55	12	063321042010	**MAN283**
A 40-10 (94139111, 94139131, 94139311, 94139315, 94139317, ..)	8140.27.2720	76	01/1991 → 12/1996		90	12	063377300010	**MAN7300**
A 40-10 (94139111, 94139131, 94139311, 94139315, 94139317, ..)	8140.27.2720	76	01/1991 → 12/1996		90	12	063533155000	**MAN2023**
A 40-10 (94139111, 94139131, 94139311, 94139315, 94139317, ..)	8140.23.	76	09/1996 → 09/1996		55	12	063321042010	**MAN283**
A 40-10 (94139111, 94139131, 94139311, 94139315, 94139317, ..)	8140.23.	76	09/1996 →		90	12	063377300010	**MAN7300**
A 40-10 (94139111, 94139131, 94139311, 94139315, 94139317, ..)	8140.23.	76	09/1996 → 05/1999		90	12	063533155000	**MAN2023**
A 40-12 (95819311, 95819315, 95819317, 95819331)	8140.43.	90	05/1996 → 05/1996		55	12	063321042010	**MAN283**
A 40-12 (95819311, 95819315, 95819317, 95819331)	8140.43.	90	05/1996 → 05/1999		90	12	063533155000	**MAN2023**
A 45-10 (94159111, 94159131, 94159211, 94159311, 94159315, ..)	8140.27.2720	76	01/1991 → 04/1996		55	12	063321042010	**MAN283**

		kW			A	V	LONG	SHORT
IVECO								
DAILY I Autobus								
A 45-10 (95739111, 95739131, 95739311, 95739317, 95739331)	8140.23.	76	05/1996 → 05/1996		55	12	063321042010	**MAN283**
A 45-10 (95739111, 95739131, 95739311, 95739317, 95739331)	8140.23.	76	05/1996 → 05/1999		90	12	063533155000	**MAN2023**
A 45-12 (95839211, 95839231, 95839311, 95839317, 95839331, ..)	8140.43.	90	05/1996 → 05/1999		90	12	063533155000	**MAN2023**
DAILY I Cassone / Furgonato / Promiscuo								
30-8 (10014131, 10014132, 10014137, 10014231, 10014232, 1001..)	8140.61.200	53	01/1978 → 12/1989		65	12	063321019010	**MAN274**
30-8 (10014131, 10014132, 10014137, 10014231, 10014232, 1001..)	8140.61.200	53	01/1978 → 12/1989		65	12	063321021010	**MAN354**
30-8 (14914111, 14914117, 14914211, 14914217, 14915111, 1491..)	8140.63.	62	09/1998 → 05/1999		90	12	063533155000	**MAN2023**
30-8 V (14914111, 14914117, 14914211, 14914217, 14915111, 14..)	8140.63.	62	09/1998 → 05/1999		90	12	063533155000	**MAN2023**
30-10	8140.23.	76	01/1997 → 05/1999		90	12	063533155000	**MAN2023**
30-10 C	8140.23.	76	01/1998 → 05/1999		90	12	063533155000	**MAN2023**
30-10 C	8140.23.	76	01/1997 → 05/1999		90	12	063533155000	**MAN2023**
35-8 (10034131, 10034132, 10034137, 10034224, 10034231, 1003..)	8140.61.200	53	01/1978 → 12/1989		65	12	063321019010	**MAN274**
35-8 (10034131, 10034132, 10034137, 10034224, 10034231, 1003..)	8140.61.200	53	01/1978 → 12/1989		65	12	063321021010	**MAN354**
35-8 (14934104, 14934111, 14934204, 14934205, 14934211, 1493..)	8140.63.	62	09/1998 → 05/1999		90	12	063533155000	**MAN2023**
35-10 (10314204, 10314211, 10314212, 10314217, 10314411, 103..)	8140.21.200	68	01/1985 → 12/1989		55	12	063321044010	**MAN286**
35-10 (10314204, 10314211, 10314212, 10314217, 10314411, 103..)	8140.21.200	68	01/1985 → 12/1989		90	12	063377300010	**MAN7300**
35-10 (12974212, 12974217, 12974417)	8140.97.2781	68	09/1996 → 08/1998		90	12	063377300010	**MAN7300**
35-10 (12974212, 12974217, 13014111, 13014131, 13014204, 130..)	8140.47R	80	01/1989 → 08/1998		55	12	063321042010	**MAN283**
35-10 (12974212, 12974217, 13014111, 13014131, 13014204, 130..)	8140.47R	80	01/1989 → 08/1998		90	12	063377300010	**MAN7300**
35-10 (12974212, 12974217, 13014111, 13014131, 13014204, 130..)	8140.47R.2790	76	01/1989 → 08/1998		55	12	063321042010	**MAN283**
35-10 (12974212, 12974217, 13014111, 13014131, 13014204, 130..)	8140.47R.2790	76	01/1989 → 08/1998		90	12	063377300010	**MAN7300**
35-10 (15034111, 15034204, 15034211, 15034215, 15034217, 150..)	8140.23.	76	01/1996 → 01/1996		55	12	063321042010	**MAN283**
35-10 (15034111, 15034204, 15034211, 15034215, 15034217, 150..)	8140.23.	76	01/1996 →		90	12	063377300010	**MAN7300**

		kW		i	A	V	MAGNETI MARELLI LONG	MAGNETI MARELLI SHORT
IVECO								
DAILY I Cassone / Furgonato / Promiscuo								
35-10 (15034111, 15034204, 15034211, 15034215, 15034217, 150..)	8140.23.	76	05/1996 → 05/1999		90	12	063533155000	**MAN2023**
35-12 (13114131, 13114204, 13114211, 13114212, 13114217, 131..)	8140.47.2700	85	01/1990 → 04/1996		55	12	063321042010	**MAN283**
40-10 4x4 (15214104, 15214111, 15214117, 15215111)	8140.23.	76	01/1997 → 01/1997		55	12	063321044010	**MAN286**
40-10 4x4 (15214104, 15214111, 15214117, 15215111)	8140.23.	76	01/1997 →		90	12	063377300010	**MAN7300**
40-10 V	8140.27 S	68	01/1985 → 12/1989		90	12	063377300010	**MAN7300**
40-10 V	8140.27.2720	76	01/1990 → 04/1996		55	12	063321044010	**MAN286**
40-10 V	8140.27.2720	76	01/1990 → 04/1996		90	12	063377300010	**MAN7300**
40-8 V	8140.61.200	53	01/1983 → 06/1989		65	12	063321019010	**MAN274**
40-8 V	8140.61.200	53	01/1983 → 06/1989		65	12	063321021010	**MAN354**
45-10 V (10334204, 10334211, 10334212, 10334217, 10334404)	8140.21.200	68	01/1985 → 12/1989		55	12	063321044010	**MAN286**
45-10 V (13034204, 13034211, 13034212, 13034224, 13034231, ..)	8140.27.2720	76	01/1989 → 04/1996		55	12	063321044010	**MAN286**
49-10 V (10354204, 10354211, 10354212, 10354217, 10354404, ..)	8140.21.200	68	01/1985 → 12/1989		55	12	063321044010	**MAN286**
49-10 V (13054204, 13054211, 13054212, 13054215, 13054217, ..)	8140.27.2700, 8140.47R.2790	76	01/1989 → 04/1996		55	12	063321042010	**MAN283**
49-10 V (13054204, 13054211, 13054212, 13054215, 13054217, ..)	8140.27.2700, 8140.47R.2790	76	07/1992 → 04/1996		55	12	063321044010	**MAN286**
49-12 V (15154204, 15154211, 15154215, 15154217, 15154404, ..)	8140.43.	90	05/1996 → 05/1999		90	12	063533155000	**MAN2023**
59-12 V (13154404, 13154411, 13154412, 13154417, 13154424, ..)	8140.47.2700, 8140.47.2711	85	05/1991 → 04/1996		55	12	063321042010	**MAN283**
59-12 V (15174404, 15174411, 15174415, 15174417)	8140.43.	90	05/1996 → 05/1996		55	12	063321042010	**MAN283**
59-12 V (15174404, 15174411, 15174415, 15174417)	8140.43.	90	05/1996 → 05/1996		90	12	063533155000	**MAN2023**
DAILY I Pianale piatto/Telaio								
30-8 (10011131, 10011132, 10011231, 10011232, 10011237, 1001..)	8140.61.200	53	01/1978 → 12/1989		65	12	063321019010	**MAN274**
30-8 (10011131, 10011132, 10011231, 10011232, 10011237, 1001..)	8140.61.200	53	01/1978 → 12/1989		65	12	063321021010	**MAN354**
30-8 (10011131, 10011132, 10011231, 10011232, 10011237, 1001..)	8140.63.	62	09/1998 → 05/1999		90	12	063533155000	**MAN2023**
30-8 (14911111, 14911117, 14911211, 14911215, 14911217, 1491..)	8140.63.	62	09/1998 → 05/1999		90	12	063533155000	**MAN2023**
30-10	8140.23.	76	01/1998 → 05/1999		55	12	063321044010	**MAN286**

		kW		i	A	V	LONG	SHORT
IVECO								
DAILY I Pianale piatto/Telaio								
30-10	8140.23.	76	01/1998 → 05/1999		90	12	063533155000	**MAN2023**
35-8 (10031131, 10031132, 10031137, 10031224, 10031231, 1003..)	8140.61.200	53	01/1978 → 12/1989		65	12	063321019010	**MAN274**
35-8 (10031131, 10031132, 10031137, 10031224, 10031231, 1003..)	8140.61.200	53	01/1978 → 12/1989		65	12	063321021010	**MAN354**
35-8 (14930304, 14931104, 14931111, 14931115, 14931204, 1493..)	8140.63.	62	09/1998 → 05/1999		90	12	063533155000	**MAN2023**
35-10	8140.47R	80	01/1989 → 12/1996		90	12	063377300010	**MAN7300**
35-10 (10310311, 10311111, 10311112, 10311117, 10311211, 103..)	8140.21.200	68	01/1985 → 12/1989		55	12	063321044010	**MAN286**
35-10 (10310311, 10311111, 10311112, 10311117, 10311211, 103..)	8140.21.200	68	01/1985 → 12/1989		90	12	063377300010	**MAN7300**
35-10 (12971112, 12971212, 12971312, 12971317, 12976112, 129..)	8140.47R.2790	76	01/1989 → 12/1996		55	12	063321042010	**MAN283**
35-10 (12971112, 12971212, 12971312, 12971317, 12976112, 129..)	8140.47R.2790	76	07/1992 → 12/1996		55	12	063321044010	**MAN286**
35-10 (12971112, 12971212, 12971312, 12971317, 12976112, 129..)	8140.47R.2790	76	01/1989 → 12/1996		90	12	063377300010	**MAN7300**
35-10 (12971112, 12971212, 12971312, 12971317, 12976112, 129..)	8140.97.2781	68	01/1989 → 12/1996		55	12	063321042010	**MAN283**
35-10 (12971112, 12971212, 12971312, 12971317, 12976112, 129..)	8140.97.2781	68	07/1992 → 12/1996		55	12	063321044010	**MAN286**
35-10 (12971112, 12971212, 12971312, 12971317, 12976112, 129..)	8140.97.2781	68	01/1989 → 12/1996		90	12	063377300010	**MAN7300**
35-10 (15030111, 15030211, 15030311, 15031111, 15031117, 150..)	8140.23.	76	01/1996 → 01/1996		55	12	063321042010	**MAN283**
35-10 (15030111, 15030211, 15030311, 15031111, 15031117, 150..)	8140.23.	76	01/1996 → 05/1999		55	12	063321044010	**MAN286**
35-10 (15030111, 15030211, 15030311, 15031111, 15031117, 150..)	8140.23.	76	01/1996 → 05/1999		90	12	063377300010	**MAN7300**
35-10 (15030111, 15030211, 15030311, 15031111, 15031117, 150..)	8140.23.	76	01/1996 → 05/1999	→ 2324292	90	12	063533155000	**MAN2023**
35-12 (13110131, 13110211, 13110231, 13110311, 13110312, 131..)	8140.47.2700	85	01/1990 → 04/1996		55	12	063321042010	**MAN283**
35-12 (15130311, 15130411, 15131111, 15131204, 15131211, 151..)	8140.43.	90	05/1996 → 05/1996		55	12	063321042010	**MAN283**
35-12 (15130311, 15130411, 15131111, 15131204, 15131211, 151..)	8140.43.	90	05/1996 → 05/1999		90	12	063533155000	**MAN2023**
40-8	8140.61.200	53	01/1983 → 06/1989		65	12	063321019010	**MAN274**
40-8	8140.61.200	53	01/1983 → 06/1989		65	12	063321021010	**MAN354**
40-10	8140.27 S	68	01/1985 → 12/1989		90	12	063377300010	**MAN7300**

		kW		i	A	V	MAGNETI MARELLI LONG	MAGNETI MARELLI SHORT
IVECO								
DAILY I Pianale piatto/Telaio								
40-10 W 4x4	8140.23.	76	01/1997 → 01/1997		55	12	063321044010	**MAN286**
40-10 W 4x4	8140.23.	76	01/1997 → 05/1999		90	12	063377300010	**MAN7300**
45-10 (10331211, 10331212, 10331217, 10331304, 10331311, 103..)	8140.21.200	68	01/1985 → 12/1989		55	12	063321044010	**MAN286**
45-10 (13031204, 13031211, 13031212, 13031224, 13031231, 130..)	8140.27.2720	76	01/1991 → 04/1996		55	12	063321042010	**MAN283**
45-10 (13031204, 13031211, 13031212, 13031224, 13031231, 130..)	8140.27.2720	76	01/1989 → 04/1996		55	12	063321044010	**MAN286**
49-10 (10350211, 10350304, 10350311, 10350404, 10350411, 103..)	8140.21.200	68	01/1985 → 12/1989		55	12	063321044010	**MAN286**
49-10 (13050211, 13050231, 13050304, 13050311, 13050331, 130..)	8140.27.2700, 8140.47R.2790	76	01/1989 → 04/1996		55	12	063321042010	**MAN283**
49-10 (13050211, 13050231, 13050304, 13050311, 13050331, 130..)	8140.27.2700, 8140.47R.2790	76	01/1989 → 04/1996		90	12	063533155000	**MAN2023**
49-10 (15050304, 15050404, 15050411, 15051204, 15051211, 150..)	8140.23.	76	05/1996 → 05/1996		55	12	063321042010	**MAN283**
49-10 (15050304, 15050404, 15050411, 15051204, 15051211, 150..)	8140.23.	76	05/1996 → 05/1999		90	12	063533155000	**MAN2023**
49-12 (15150211, 15150311, 15150404, 15150411, 15151204, 151..)	8140.43.	90	05/1996 → 05/1999		90	12	063533155000	**MAN2023**
59-12 (13150204, 13150211, 13150231, 13150311, 13150312, 131..)	8140.47.2700, 8140.47.2711	85	05/1991 → 04/1996		55	12	063321042010	**MAN283**
59-12 (15170211, 15170304, 15170311, 15170504, 15170511, 151..)	8140.43.	90	05/1996 → 05/1996		55	12	063321042010	**MAN283**
59-12 (15170211, 15170304, 15170311, 15170504, 15170511, 151..)	8140.43.	90	05/1996 → 05/1999		90	12	063533155000	**MAN2023**
DAILY I Ribaltabile								
35-8 K (14930304, 14931104, 14931111, 14931115, 14931204, 14..)	8140.63.	62	09/1998 → 05/1999		90	12	063533155000	**MAN2023**
35-10 K (15030111, 15030211, 15030311, 15031111, 15031117, ..)	8140.23.	76	01/1997 → 01/1997		55	12	063321042010	**MAN283**
35-10 K (15030111, 15030211, 15030311, 15031111, 15031117, ..)	8140.23.	76	01/1997 →		90	12	063377300010	**MAN7300**
35-10 K (15030111, 15030211, 15030311, 15031111, 15031117, ..)	8140.23.	76	01/1997 → 05/1999		90	12	063533155000	**MAN2023**
35-12 K (15130311, 15130411, 15131111, 15131204, 15131211, ..)	8140.43.	90	09/1996 → 08/1998		55	12	063321042010	**MAN283**
35-12 K (15130311, 15130411, 15131111, 15131204, 15131211, ..)	8140.43.	90	09/1996 → 08/1998		90	12	063533155000	**MAN2023**
45-10 (13031204, 13031211, 13031212, 13031224, 13031231, 130..)	8140.27.2720	76	01/1992 → 04/1996		55	12	063321042010	**MAN283**

		kW			A	V	LONG	SHORT
IVECO								
DAILY I Ribaltabile								
45-10 (13031204, 13031211, 13031212, 13031224, 13031231, 130..)	8140.27.2720	76	01/1992 → 04/1996		55	12	063321044010	**MAN286**
49-10 K (13056212, 13056224, 13056231, 13056237, 13056304, 1..)	8140.27.2700, 8140.47R.2790	76	01/1989 → 04/1996		55	12	063321042010	**MAN283**
49-10 K (15056204, 15056211, 15056304, 15056311)	8140.23.	76	05/1996 → 05/1996		55	12	063321042010	**MAN283**
49-10 K (15056204, 15056211, 15056304, 15056311)	8140.23.	76	05/1996 → 05/1999		55	12	063321044010	**MAN286**
49-10 K (15056204, 15056211, 15056304, 15056311)	8140.23.	76	05/1996 → 05/1999		90	12	063533155000	**MAN2023**
49-12 K	8140.43.	90	05/1996 → 05/1999		90	12	063533155000	**MAN2023**
59-12 K (13156211, 13156212, 13156231, 13156311, 13156312, 1..)	8140.47.2700, 8140.47.2711	85	05/1991 → 04/1996		55	12	063321042010	**MAN283**
59-12 K (13156211, 13156212, 13156231, 13156311, 13156312, 1..)	8140.47.2700, 8140.47.2711	85	05/1991 → 04/1996		90	12	063533155000	**MAN2023**
59-12 K (15176211, 15176304, 15176311, 15176315, 15176317, 1..)	8140.43.	90	05/1996 → 05/1996		55	12	063321042010	**MAN283**
59-12 K (15176211, 15176304, 15176311, 15176315, 15176317, 1..)	8140.43.	90	05/1996 → 05/1999		90	12	063533155000	**MAN2023**
DAILY II Cassone / Furgonato / Promiscuo								
29 L 9 V	8140.43R	66	11/2001 → 09/2002		90	12	063533200010	**MAN2001**
29 L 9 V	8140.43R	66	11/2001 → 09/2002		120	12	063535150440	**MAN2030**
29 L 9 V	8140.63.	62	05/1999 → 09/2002		90	12	063533200010	**MAN2001**
29 L 10 V (ALJA43A2, ALJA42A2, ALJA41A2)	F1AE0481A	70	09/2002 → 03/2006		110	12	063533250530	**MAN2039**
29 L 10 V (ALJA43A2, ALJA42A2, ALJA41A2)	F1AE0481A	70	09/2002 → 03/2006		140	12	063535250200	**MAN2031**
29 L 11 V	8140.43C	78	05/1999 → 09/2002		90	12	063533200010	**MAN2001**
29 L 11 V	8140.43C	78	05/1999 → 09/2002		120	12	063535150440	**MAN2030**
29 L 12 V (ALKA41A2, ALLA52A2, ALKA42A2)	F1AE0481B	85	09/2002 → 03/2006		110	12	063533250530	**MAN2039**
29 L 12 V (ALKA41A2, ALLA52A2, ALKA42A2)	F1AE0481B	85	09/2002 → 03/2006		140	12	063535250200	**MAN2031**
29 L 13	8140.43S	92	05/2001 → 03/2006		90	12	063533200010	**MAN2001**
29 L 13	8140.43S	92	05/2001 → 03/2006		120	12	063535150440	**MAN2030**
29 L 14	F1AE0481M	100	01/2005 → 03/2006		110	12	063533250530	**MAN2039**
29 L 14	F1AE0481M	100	01/2005 → 03/2006		140	12	063535250200	**MAN2031**
35 C 12 V, 35 S 12 V (AGKA43A2, AGKB43A2, AGKB46A2, AGKC43A2)	F1AE0481B	85	09/2002 → 03/2006		110	12	063533250530	**MAN2039**
35 C 12 V, 35 S 12 V (AGKA43A2, AGKB43A2, AGKB46A2, AGKC43A2)	F1AE0481B	85	09/2002 → 03/2006		140	12	063535250200	**MAN2031**
35 C 14	F1CE0481A	100	09/2004 → 03/2006		110	12	063533251220	**MAN2041**
35 C 14, 35 S 14	F1AE0481M	100	01/2005 → 03/2006		110	12	063533250530	**MAN2039**
35 C 14, 35 S 14	F1AE0481M	100	01/2005 → 03/2006		140	12	063535250200	**MAN2031**
35 C 17, 35 S 17	F1CE0481B	122	01/2005 → 03/2006		110	12	063533251220	**MAN2041**

		kW			A	V	LONG	SHORT
IVECO								
DAILY II Cassone / Furgonato / Promiscuo								
35 S 9 V	8140.43R	66	11/2001 → 03/2006		90	12	063533200010	**MAN2001**
35 S 9 V	8140.43R	66	11/2001 → 03/2006		120	12	063535150440	**MAN2030**
35 S 9 V,35 C 9 V	8140.63.	62	05/1999 → 09/2002		90	12	063533200010	**MAN2001**
35 S 9 V,35 C 9 V	8140.63.	62	05/1999 → 03/2006		120	12	063535150440	**MAN2030**
35 S 10 (ANJA41A1, ANJA42A2, ANJA42AB, ANJA43A, ANJAV1A, AGJ..)	F1AE0481A	70	09/2002 →		90	12	063377300010	**MAN7300**
35 S 10 (ANJA41A1, ANJA42A2, ANJA42AB, ANJA43A, ANJAV1A, AGJ..)	F1AE0481A	70	09/2002 → 03/2006		110	12	063533250530	**MAN2039**
35 S 10 (ANJA41A1, ANJA42A2, ANJA42AB, ANJA43A, ANJAV1A, AGJ..)	F1AE0481A	70	09/2002 → 03/2006		140	12	063535250200	**MAN2031**
35 S 11 V,35 C 11 V	8140.43C	78	05/1999 → 12/2001		90	12	063533200010	**MAN2001**
35 S 11 V,35 C 11 V	8140.43C	78	05/1999 → 09/2002		120	12	063535150440	**MAN2030**
35 S 13 V,35 C 13 V	8140.43S	92	05/1999 → 03/2006		90	12	063533200010	**MAN2001**
35 S 13 V,35 C 13 V	8140.43S	92	05/1999 → 03/2006		120	12	063535150440	**MAN2030**
35 S 15 V, 35 C 15 V (A6HCV3B2, A6HBV4B2, A6HC41B2, A6HC42B2)	8140.43N	107	11/2002 → 03/2006		90	12	063533200010	**MAN2001**
35 S 15 V, 35 C 15 V (A6HCV3B2, A6HBV4B2, A6HC41B2, A6HC42B2)	8140.43N	107	11/2002 → 03/2006		120	12	063535150440	**MAN2030**
40 C 13	8140.43S	92	01/2001 → 09/2004		90	12	063533200010	**MAN2001**
40 C 13	8140.43S	92	01/2001 → 09/2004		120	12	063535150440	**MAN2030**
40 C 14	F1CE0481A	100	09/2004 → 03/2006		110	12	063533251220	**MAN2041**
40 C 15	8140.43N	107	04/2003 → 09/2004		90	12	063533200010	**MAN2001**
40 C 15	8140.43N	107	04/2003 → 09/2004		120	12	063535150440	**MAN2030**
40 C 17, 40 S 17	F1CE0481B	122	01/2005 → 03/2006		110	12	063533251220	**MAN2041**
50 C 11	8140.43C	78	05/1999 → 09/2004		90	12	063533200010	**MAN2001**
50 C 11	8140.43C	78	05/1999 → 09/2002		120	12	063535150440	**MAN2030**
50 C 13	8140.43S	92	05/1999 → 09/2004		90	12	063533200010	**MAN2001**
50 C 13	8140.43S	92	05/1999 → 09/2004		120	12	063535150440	**MAN2030**
50 C 14	F1CE0481A	100	09/2004 → 03/2006		110	12	063533251220	**MAN2041**
50 C 15	8140.43N	107	05/2001 → 09/2004		90	12	063533200010	**MAN2001**
50 C 15	8140.43N	107	05/2001 → 09/2004		120	12	063535150440	**MAN2030**
50 C 17	F1CE0481B	122	09/2004 → 03/2006		110	12	063533251220	**MAN2041**
65 C 14	F1CE0481A	100	09/2004 → 03/2006		110	12	063533251220	**MAN2041**
65 C 15	8140.43N	107	11/2001 → 09/2004		90	12	063533200010	**MAN2001**
65 C 15	8140.43N	107	11/2001 → 09/2004		120	12	063535150440	**MAN2030**
65 C 17	F1CE0481B	122	09/2004 → 03/2006		110	12	063533251220	**MAN2041**
DAILY II Pianale piatto/Telaio								
29 L 9	8140.63.	62	05/1999 → 09/2002		90	12	063533200010	**MAN2001**
29 L 9	8140.43R	66	11/2001 → 09/2002		90	12	063533200010	**MAN2001**
29 L 9	8140.43R	66	11/2001 → 09/2002		120	12	063535150440	**MAN2030**
29 L 10 (ALJAV1A1, ALJA41AA, ALJA41A1, AHJA64A1, AHJA14A1, A..)	F1AE0481A	70	09/2002 → 03/2006		110	12	063533250530	**MAN2039**

		kW			A	V	LONG	SHORT
IVECO								
DAILY II Pianale piatto/Telaio								
29 L 10 (ALJAV1A1, ALJA41AA, ALJA41A1, AHJA64A1, AHJA14A1, A..)	F1AE0481A	70	09/2002 → 03/2006		140	12	063535250200	**MAN2031**
29 L 11	8140.43B, 8140.43C	78	05/1999 → 12/2001		90	12	063533200010	**MAN2001**
29 L 11	8140.43B, 8140.43C	78	05/1999 → 09/2002		120	12	063535150440	**MAN2030**
29 L 12 (ALKA41A1, AHKA64A1, ALLA51A1)	F1AE0481B	85	09/2002 → 03/2006		110	12	063533250530	**MAN2039**
29 L 12 (ALKA41A1, AHKA64A1, ALLA51A1)	F1AE0481B	85	09/2002 → 03/2006		140	12	063535250200	**MAN2031**
29 L 13	8140.43S	92	11/2001 → 03/2006		90	12	063533200010	**MAN2001**
29 L 13	8140.43S	92	11/2001 → 03/2006		120	12	063535150440	**MAN2030**
29 L 14 (AHRA11C1B1, AHRA14C1B1, AHRA64C1B1)	F1AE0481M	100	11/2005 → 03/2006		110	12	063533250530	**MAN2039**
29 L 14 (AHRA11C1B1, AHRA14C1B1, AHRA64C1B1)	F1AE0481M	100	11/2005 → 03/2006		140	12	063535250200	**MAN2031**
35 C 9, 35 S 9	8140.43R	66	11/2001 → 03/2006		90	12	063533200010	**MAN2001**
35 C 9, 35 S 9	8140.43R	66	11/2001 → 03/2006		120	12	063535150440	**MAN2030**
35 C 10 V , 35 S 10 V (AMJA11A1, AMJA14A1, AMJA64A1, AMJA65A..)	F1AE0481A	70	09/2002 →		90	12	063377300010	**MAN7300**
35 C 10 V , 35 S 10 V (AMJA11A1, AMJA14A1, AMJA64A1, AMJA65A..)	F1AE0481A	70	09/2002 → 03/2006		110	12	063533250530	**MAN2039**
35 C 10 V , 35 S 10 V (AMJA11A1, AMJA14A1, AMJA64A1, AMJA65A..)	F1AE0481A	70	09/2002 → 03/2006		140	12	063535250200	**MAN2031**
35 C 12 , 35 S 12 (AEKA14A1, AEKA14AA, AEKA64A1, AEKB11A1, A..)	F1AE0481B	85	09/2002 → 03/2006		110	12	063533250530	**MAN2039**
35 C 12 , 35 S 12 (AEKA14A1, AEKA14AA, AEKA64A1, AEKB11A1, A..)	F1AE0481B	85	09/2002 → 03/2006		140	12	063535250200	**MAN2031**
35 C 14	F1CE0481A	100	09/2004 → 03/2006		110	12	063533251220	**MAN2041**
35 C 14, 35 S 14	F1AE0481M	100	01/2005 → 03/2006		110	12	063533250530	**MAN2039**
35 C 14, 35 S 14	F1AE0481M	100	01/2005 → 03/2006		140	12	063535250200	**MAN2031**
35 C 15	8140.43N	107	11/2001 → 03/2006		90	12	063533200010	**MAN2001**
35 C 15	8140.43N	107	11/2001 →		120	12	063535150440	**MAN2030**
35 C 17, 35 S 17	F1CE0481B	122	01/2005 → 03/2006		110	12	063533251220	**MAN2041**
35 S 9,35 C 9	8140.63.	62	05/1999 → 09/2002		90	12	063533200010	**MAN2001**
35 S 9,35 C 9	8140.63.	62	05/1999 → 09/2002		120	12	063535150440	**MAN2030**
35 S 11,35 C 11	8140.43C	78	05/1999 → 12/2001		90	12	063533200010	**MAN2001**
35 S 11,35 C 11	8140.43C	78	05/1999 → 12/2001		120	12	063535150440	**MAN2030**
35 S 13,35 C 13	8140.43S	92	05/1999 → 03/2006		90	12	063533200010	**MAN2001**
35 S 13,35 C 13	8140.43S	92	05/1999 → 03/2006		120	12	063535150440	**MAN2030**
40 C 13	8140.43S	92	01/2001 → 09/2004		90	12	063533200010	**MAN2001**
40 C 13	8140.43S	92	01/2001 → 09/2004		120	12	063535150440	**MAN2030**
40 C 14	F1CE0481A	100	09/2004 → 03/2006		110	12	063533251220	**MAN2041**
40 C 15	8140.43N	107	04/2003 → 09/2004		90	12	063533200010	**MAN2001**
40 C 15	8140.43N	107	04/2003 → 09/2004		120	12	063535150440	**MAN2030**
40 C 17, 40 S 17	F1CE0481B	122	01/2005 → 03/2006		110	12	063533251220	**MAN2041**

		kW		i	A	V	LONG	SHORT
IVECO								
DAILY II Pianale piatto/Telaio								
50 C 11	8140.43C	78	05/1999 → 09/2004		90	12	063533200010	**MAN2001**
50 C 11	8140.43C	78	05/1999 → 09/2002		120	12	063535150440	**MAN2030**
50 C 13	8140.43S	92	05/1999 → 09/2004		90	12	063533200010	**MAN2001**
50 C 13	8140.43S	92	05/1999 → 09/2004		120	12	063535150440	**MAN2030**
50 C 14	F1CE0481A	100	09/2004 → 03/2006		110	12	063533251220	**MAN2041**
50 C 15	8140.43N	107	05/2001 → 09/2004		90	12	063533200010	**MAN2001**
50 C 15	8140.43N	107	05/2001 → 09/2004		120	12	063535150440	**MAN2030**
50 C 17	F1CE0481B	122	09/2004 → 03/2006		110	12	063533251220	**MAN2041**
65 C 14	F1CE0481A	100	09/2004 → 03/2006		110	12	063533251220	**MAN2041**
65 C 15	8140.43N	107	11/2001 → 09/2004		90	12	063533200010	**MAN2001**
65 C 15	8140.43N	107	11/2001 → 09/2004		120	12	063535150440	**MAN2030**
65 C 17	F1CE0481B	122	09/2004 → 03/2006		110	12	063533251220	**MAN2041**
DAILY III Cassone / Furgonato / Promiscuo								
29L10 V	F1AE0481FA	70	05/2006 → 05/2006		110	12	063533250530	**MAN2039**
29L10 V	F1AE0481FA	70	05/2006 → 05/2006		140	12	063535250200	**MAN2031**
29L12 V, 29L12 V/P	F1AE0481GA	85	05/2006 → 05/2006		110	12	063533250530	**MAN2039**
29L12 V, 29L12 V/P	F1AE0481GA	85	05/2006 → 05/2006		140	12	063535250200	**MAN2031**
29L14 C, 29L14 C/P, 29L14 V, 29L14 V/P	F1AE0481HA	100	05/2006 → 05/2006		110	12	063533250530	**MAN2039**
29L14 C, 29L14 C/P, 29L14 V, 29L14 V/P	F1AE0481HA	100	05/2006 → 05/2006		140	12	063535250200	**MAN2031**
35C10, 35S10	F1AE0481FA	70	05/2006 →		90	12	063377300010	**MAN7300**
35C10, 35S10	F1AE0481FA	70	05/2006 → 05/2006		110	12	063533250530	**MAN2039**
35C10, 35S10	F1AE0481FA	70	05/2006 →		140	12	063535250200	**MAN2031**
35C11 V, 35S11 V	F1AE0481FA	78	06/2009 →		110	12	063533250530	**MAN2039**
35C11 V, 35S11 V	F1AE0481FA	78	06/2009 →		140	12	063535250200	**MAN2031**
35C12 V, 35C12 V/P, 35S12 V, 35S12 V/P	F1AE0481GA	85	05/2006 → 05/2006		110	12	063533250530	**MAN2039**
35C12 V, 35C12 V/P, 35S12 V, 35S12 V/P	F1AE0481GA	85	05/2006 → 05/2006		140	12	063535250200	**MAN2031**
35C13 V, 35C13 V/P, 35S13 V, 35S13 V/P	F1AE0481GA	93	06/2009 →		110	12	063533250530	**MAN2039**
35C13 V, 35C13 V/P, 35S13 V, 35S13 V/P	F1AE0481GA	93	06/2009 →		140	12	063535250200	**MAN2031**
35C14 V, 35C14 V/P, 35S14 V, 35S14 V/P	F1CE3481LC	103	06/2009 →		110	12	063533251220	**MAN2041**
35C15 V, 35C15 V/P	F1CE0481FA	107	04/2006 → 05/2006		110	12	063533251220	**MAN2041**
35C17 V, 35C17 V/P, 35S17 V, 35S17 V/P	F1CE0481HA	125	06/2009 →		110	12	063533251220	**MAN2041**
35C18 V, 35C18 V/P, 35S18 V, 35S18 V/P	F1CE0481HA	130	05/2006 → 05/2006		110	12	063533251220	**MAN2041**
35S14 C, 35S14 C/P, 35S14 V, 35S14 V/P, 35C14 V, 35C14 V/P	F1AE0481HA	100	05/2006 →		110	12	063533250530	**MAN2039**
35S14 C, 35S14 C/P, 35S14 V, 35S14 V/P, 35C14 V, 35C14 V/P	F1AE0481HA	100	05/2006 → 05/2009		110	12	063533251220	**MAN2041**
35S14 C, 35S14 C/P, 35S14 V, 35S14 V/P, 35C14 V, 35C14 V/P	F1AE0481HA	100	05/2006 →		140	12	063535250200	**MAN2031**
40C10 V	F1AE0481FA	70	05/2006 →		90	12	063377300010	**MAN7300**

		kW			A	V	LONG	SHORT
IVECO								
DAILY III Cassone / Furgonato / Promiscuo								
40C10 V	F1AE0481FA	70	05/2006 → 05/2009		110	12	063533250530	**MAN2039**
40C10 V	F1AE0481FA	70	05/2006 → 05/2009		140	12	063535250200	**MAN2031**
40C11 V	F1AE0481FA	78	06/2009 →		110	12	063533250530	**MAN2039**
40C11 V	F1AE0481FA	78	06/2009 →		140	12	063535250200	**MAN2031**
40C12 V, 40C14 V/P	F1AE0481GA	85	05/2006 → 05/2009		110	12	063533250530	**MAN2039**
40C12 V, 40C14 V/P	F1AE0481GA	85	05/2006 → 05/2009		140	12	063535250200	**MAN2031**
40C13 V, 40C13 V/P	F1AE0481GA	93	06/2009 →		110	12	063533250530	**MAN2039**
40C13 V, 40C13 V/P	F1AE0481GA	93	06/2009 →		140	12	063535250200	**MAN2031**
40C14 V, 40C14 V/P, 40S14 V, 40S14 V/P	F1CE3481LC	103	06/2009 →		110	12	063533251220	**MAN2041**
40C14 V, 40C14 V/P, 40S14 V, 40S14 V/P	F1CE3481LC	103	06/2009 →		140	12	063535250200	**MAN2031**
40C15 V, 40C15 V/P	F1CE0481FA	107	05/2006 → 05/2006		110	12	063533251220	**MAN2041**
40C17 V, 40C17 V/P	F1CE0481HA	125	06/2009 →		110	12	063533251220	**MAN2041**
40C18 V, 40C18 V/P	F1CE0481HA	130	05/2006 → 05/2006		110	12	063533251220	**MAN2041**
45C15 V	F1CE0481FA	107	05/2006 → 05/2009		110	12	063533251220	**MAN2041**
45C18	F1CE0481HA	130	05/2006 →		110	12	063533251220	**MAN2041**
50C14 V, 50C14 V/P	F1CE3481LC	103	06/2009 →		110	12	063533251220	**MAN2041**
50C15	F1CE0481FA	107	05/2006 → 05/2006		110	12	063533251220	**MAN2041**
50C17 V, 50C17 V/P	F1CE0481HA	125	06/2009 →		110	12	063533251220	**MAN2041**
50C18	F1CE0481HA	130	05/2006 → 05/2006		110	12	063533251220	**MAN2041**
60C15 V	F1CE0481FA	107	05/2006 →		110	12	063533251220	**MAN2041**
60C18	F1CE0481HC	130	05/2006 →		110	12	063533251220	**MAN2041**
65C14 V, 65C14 V/P	F1CE3481LC	103	06/2009 →		110	12	063533251220	**MAN2041**
65C15	F1CE0481FA	107	05/2006 →		110	12	063533251220	**MAN2041**
65C17 V, 65C17 V/P	F1CE0481HA	125	06/2009 →		110	12	063533251220	**MAN2041**
65C18	F1CE0481HC	130	05/2006 → 05/2006		110	12	063533251220	**MAN2041**
70C14 V, 70C14 V/P	F1CE3481LC	103	11/2010 →		110	12	063533251220	**MAN2041**
DAILY III Pianale piatto/Telaio								
29L10	F1AE0481FA	70	05/2006 → 05/2006		110	12	063533250530	**MAN2039**
29L10	F1AE0481FA	70	05/2006 → 05/2006		140	12	063535250200	**MAN2031**
29L12	F1AE0481GA	85	05/2006 → 05/2006		110	12	063533250530	**MAN2039**
29L12	F1AE0481GA	85	05/2006 → 05/2006		140	12	063535250200	**MAN2031**
29L14	F1AE0481HA	100	05/2006 → 05/2006		110	12	063533250530	**MAN2039**
29L14	F1AE0481HA	100	05/2006 → 05/2006		140	12	063535250200	**MAN2031**
35C10, 35S10	F1AE0481FA	70	05/2006 →		90	12	063377300010	**MAN7300**
35C10, 35S10	F1AE0481FA	70	05/2006 → 05/2006		110	12	063533250530	**MAN2039**
35C10, 35S10	F1AE0481FA	70	05/2006 → 05/2006		140	12	063535250200	**MAN2031**
35C11, 35S11, 35S11 D	F1AE0481FA	78	06/2009 →		110	12	063533250530	**MAN2039**
35C11, 35S11, 35S11 D	F1AE0481FA	78	06/2009 →		140	12	063535250200	**MAN2031**
35C12, 35S12	F1AE0481GA	85	05/2006 → 05/2006		110	12	063533250530	**MAN2039**
35C12, 35S12	F1AE0481GA	85	05/2006 → 05/2006		140	12	063535250200	**MAN2031**
35C13, 35C13 /P, 35S13 D, 35S13, 35S13 /P	F1AE0481GA	93	06/2009 →		110	12	063533250530	**MAN2039**
35C13, 35C13 /P, 35S13 D, 35S13, 35S13 /P	F1AE0481GA	93	06/2009 →		140	12	063535250200	**MAN2031**

		kW			A	V	LONG	SHORT
IVECO								
DAILY III Pianale piatto/Telaio								
35C14, 35C14 /P, 35S14, 35S14 /P, 35S14 D, 35S14 D/P	F1CE3481LC	103	06/2009 →		110	12	063533251220	**MAN2041**
35C15	F1CE0481FA	107	04/2006 → 05/2006		110	12	063533251220	**MAN2041**
35C17, 35C17 /P, 35S17, 35S17 /P, 35S17 D	F1CE0481HA	125	06/2009 →		110	12	063533251220	**MAN2041**
35C18, 35S18	F1CE0481HA	130	05/2006 → 05/2006		110	12	063533251220	**MAN2041**
35S14	F1AE0481HA	100	05/2006 →		110	12	063533250530	**MAN2039**
35S14	F1AE0481HA	100	05/2006 → 05/2009		110	12	063533251220	**MAN2041**
35S14	F1AE0481HA	100	05/2006 →		140	12	063535250200	**MAN2031**
35S17 W, 35S17 WD	F1CE0481HA	125	06/2009 →		110	12	063533251220	**MAN2041**
40C10, 40S10	F1AE0481FA	70	05/2006 →		90	12	063377300010	**MAN7300**
40C10, 40S10	F1AE0481FA	70	05/2006 → 05/2009		110	12	063533250530	**MAN2039**
40C10, 40S10	F1AE0481FA	70	05/2006 → 05/2009		140	12	063535250200	**MAN2031**
40C11, 40C11 D, 40S11, 40S11 D	F1AE0481FA	78	06/2009 →		110	12	063533250530	**MAN2039**
40C11, 40C11 D, 40S11, 40S11 D	F1AE0481FA	78	06/2009 →		140	12	063535250200	**MAN2031**
40C12	F1AE0481GA	85	05/2006 → 05/2009		110	12	063533250530	**MAN2039**
40C12	F1AE0481GA	85	05/2006 → 05/2009		140	12	063535250200	**MAN2031**
40C13, 40C13 /P, 40S13 D, 40S13, 40S13 /P	F1AE0481GA	93	06/2009 →		110	12	063533250530	**MAN2039**
40C13, 40C13 /P, 40S13 D, 40S13, 40S13 /P	F1AE0481GA	93	06/2009 →		140	12	063535250200	**MAN2031**
40C14, 40C14 /P, 40S14, 40S14 /P, 40S14 D, 40S14 D/P	F1CE3481LC	103	06/2009 →		110	12	063533251220	**MAN2041**
40C14, 40C14 /P, 40S14, 40S14 /P, 40S14 D, 40S14 D/P	F1CE3481LC	103	06/2009 →		140	12	063535250200	**MAN2031**
40C15	F1CE0481FA	107	05/2006 → 05/2006		110	12	063533251220	**MAN2041**
40C17, 40C17 /P, 40S17, 40S17 /P, 40S17 D	F1CE0481HA	125	06/2009 →		110	12	063533251220	**MAN2041**
40C18	F1CE0481HA	130	05/2006 → 05/2006		110	12	063533251220	**MAN2041**
45C15	F1CE0481FA	107	05/2006 → 05/2009		110	12	063533251220	**MAN2041**
45C18, 45C18 /P, 45C18 D, 45C18 D/P	F1CE0481HA	130	05/2006 →		110	12	063533251220	**MAN2041**
50C14, 50C14 /P	F1CE3481LC	103	06/2009 →		110	12	063533251220	**MAN2041**
50C15	F1CE0481FA	107	05/2006 → 05/2006		110	12	063533251220	**MAN2041**
50C17, 50C17 /P	F1CE0481HA	125	06/2009 →		110	12	063533251220	**MAN2041**
50C18	F1CE0481HA	130	05/2006 → 05/2006		110	12	063533251220	**MAN2041**
55S17 W, 55S17 WD	F1CE0481HA	125	07/2007 →		110	12	063533251220	**MAN2041**
60C14, 60C14 /P	F1CE3481LC	103	11/2010 →		110	12	063533251220	**MAN2041**
60C15, 60C15 /P, 60C15 D, 60C15 D/P	F1CE0481FA	107	05/2006 →		110	12	063533251220	**MAN2041**
60C18	F1CE0481HC	130	05/2006 →		110	12	063533251220	**MAN2041**
65C14, 65C14 /P	F1CE3481LC	103	06/2009 →		110	12	063533251220	**MAN2041**
65C15, 65C15 /P, 65C15 D, 65C15 D/P	F1CE0481FA	107	05/2006 →		110	12	063533251220	**MAN2041**
65C17, 65C17 /P	F1CE0481HA	125	06/2009 →		110	12	063533251220	MAN2041

		kW			A	V	LONG	SHORT
IVECO								
DAILY III Pianale piatto/Telaio								
65C18	F1CE0481HC	130	05/2006 → 05/2006		110	12	063533251220	**MAN2041**
70C14, 70C14 /P	F1CE3481LC	103	11/2010 →		110	12	063533251220	**MAN2041**
DAILY III Ribaltabile								
35C10 K	F1AE0481FA	70	05/2006 →		90	12	063377300010	**MAN7300**
35C10 K	F1AE0481FA	70	05/2006 →		110	12	063533250530	**MAN2039**
35C10 K	F1AE0481FA	70	05/2006 →		140	12	063535250200	**MAN2031**
35C11 K, 35C11 DK, 35S11 K, 35S11 DK	F1AE0481FA	78	06/2009 →		110	12	063533250530	**MAN2039**
35C11 K, 35C11 DK, 35S11 K, 35S11 DK	F1AE0481FA	78	06/2009 →		140	12	063535250200	**MAN2031**
35C12	F1AE0481GA	85	05/2006 → 05/2006		110	12	063533250530	**MAN2039**
35C12	F1AE0481GA	85	05/2006 → 05/2006		140	12	063535250200	**MAN2031**
35C13 K, 35C13 DK	F1AE0481GA	93	06/2009 →		110	12	063533250530	**MAN2039**
35C13 K, 35C13 DK	F1AE0481GA	93	06/2009 →		140	12	063535250200	**MAN2031**
35C14 K, 35C14 DK	F1CE3481LC	103	06/2009 →		110	12	063533251220	**MAN2041**
35C15	F1CE0481FA	107	04/2006 → 05/2006		110	12	063533251220	**MAN2041**
35C17 K, 35C17 DK, 35S17 K, 35S17 DK	F1CE0481HA	125	06/2009 →		110	12	063533251220	**MAN2041**
35C18	F1CE0481HA	130	05/2006 → 05/2006		110	12	063533251220	**MAN2041**
35S14 K, 35S14 DK	F1AE0481HA	100	07/2007 →		110	12	063533250530	**MAN2039**
35S14 K, 35S14 DK	F1AE0481HA	100	07/2007 →		140	12	063535250200	**MAN2031**
40C14 K, 40C14 DK, 40S14 K, 40S14 DK	F1CE3481LC	103	06/2009 →		110	12	063533251220	**MAN2041**
40C14 K, 40C14 DK, 40S14 K, 40S14 DK	F1CE3481LC	103	06/2009 →		140	12	063535250200	**MAN2031**
40C17 K, 40C17 DK	F1CE0481HA	125	06/2009 →		110	12	063533251220	**MAN2041**
50C14 K, 50C14 DK	F1CE3481LC	103	06/2009 →		110	12	063533251220	**MAN2041**
50C15	F1CE0481FA	107	05/2006 → 05/2006		110	12	063533251220	**MAN2041**
50C17 K, 50C17 DK	F1CE0481HA	125	06/2009 →		110	12	063533251220	**MAN2041**
50C18	F1CE0481HA	130	05/2006 → 05/2006		110	12	063533251220	**MAN2041**
60C14 K, 60C14 DK	F1CE3481LC	103	11/2010 →		110	12	063533251220	**MAN2041**
60C15	F1CE0481FA	107	05/2006 →		110	12	063533251220	**MAN2041**
60C18	F1CE0481HC	130	05/2006 →		110	12	063533251220	**MAN2041**
65C14 K, 65C14 DK	F1CE3481LC	103	06/2009 →		110	12	063533251220	**MAN2041**
65C17 K, 65C17 DK, 65C17KK	F1CE0481HA	125	06/2009 →		110	12	063533251220	**MAN2041**
70C14 K, 70C14 DK, 70C14 KK	F1CE3481LC	103	11/2010 →		110	12	063533251220	**MAN2041**
MASSIF Pick-up								
3.0 HPI		107	10/2008 →		110	12	063533251220	**MAN2041**
3.0 HPT		130	10/2008 →		110	12	063533251220	**MAN2041**
MASSIF Single Cab								
3.0 HPI		107	10/2008 →		110	12	063533251220	**MAN2041**
3.0 HPT		130	10/2008 →		110	12	063533251220	**MAN2041**
MASSIF Station Wagon								
3.0 HPI		107	10/2008 →		110	12	063533251220	**MAN2041**
3.0 HPT		130	10/2008 →		110	12	063533251220	**MAN2041**

		kW		i	A	V	LONG	SHORT
JAGUAR								
X-TYPE (CF1)								
2.2 D	LJ46G	114	10/2005 →		124	12	063380005010	**MAN8005**
X-TYPE Estate								
2.0 D	FMBA, FMBB, R4-X404	96	02/2004 → 10/2005		124	12	063380005010	**MAN8005**
2.2 D	LJ46G	114	10/2005 →		124	12	063380005010	**MAN8005**
KIA								
CARENS II (FJ)								
1.6		77	04/2003 →		90	12	063532626010	**MAN2626**
2.0 CRDi	D4EA	83	02/2003 →		120	12	063532622010	**MAN2622**
CARNIVAL (UP)								
2.5 V6		121	08/1999 → 10/2001		110	12	063532616010	**MAN2616**
2.9 TD		93	08/1999 → 10/2001		85	12	063532617010	**MAN2617**
CARNIVAL II (GQ)								
2.5 V6	K5	110	10/2001 →		110	12	063532616010	**MAN2616**
2.9 CRDi		106	10/2001 →		110	12	063532601010	**MAN2601**
CERATO (LD)								
1.6	G4ED	77	07/2004 →		90	12	063532602010	**MAN2602**
2.0 CRDi	D4EA	83	03/2005 →		120	12	063532622010	**MAN2622**
CERATO Tre volumi (LD)								
2.0 CRDi	D4EA	83	03/2005 →		120	12	063532622010	**MAN2622**
JOICE								
2.0		102	02/2000 →		110	12	063532616010	**MAN2616**
2.0		102	02/2000 → 11/2000		90	12	063532623010	**MAN2623**
2.0		88	09/2001 →		90	12	063532623010	**MAN2623**
PICANTO (BA)								
1.0	G4HE	45	09/2005 →		70	12	063532628010	**MAN2628**
1.1	G4HG	48	04/2004 →		70	12	063532628010	**MAN2628**
PRIDE (DA)								
1.3 16V	B3	53	01/1990 →		50	12	063532619010	**MAN2619**
1.3 16V	B3	44	01/1990 →		50	12	063532619010	**MAN2619**
1.3 16V	B3	47	10/1996 →		50	12	063532619010	**MAN2619**
1.3 i		51	01/1990 →		50	12	063532619010	**MAN2619**
PRIDE Station wagon								
1.3		47	08/1999 →		50	12	063532619010	**MAN2619**
RETONA (CE)								
2.0 16V	FE (16 V)	94	05/2000 →		70	12	063532610010	**MAN2610**
RIO (DC_)								
1.3		55	09/2000 → 02/2005		80	12	063532607010	**MAN2607**
1.3		60	08/2002 → 02/2005		80	12	063532607010	**MAN2607**
1.5 16V		72	09/2000 → 02/2005		80	12	063532607010	**MAN2607**
RIO Station wagon (DC)								
1.3		55	08/2000 → 02/2005		80	12	063532607010	**MAN2607**
1.3		60	08/2000 → 02/2005		80	12	063532607010	**MAN2607**
1.5 16V		71	09/2002 → 02/2005		80	12	063532607010	**MAN2607**

		kW		i	A	V	LONG	SHORT
KIA								
SEPHIA (FA)								
1.5 i	B5	59	02/1996 →		70	12	063532610010	**MAN2610**
1.6 i	B6	59	01/1995 →		70	12	063532610010	**MAN2610**
SEPHIA Tre volumi (FA)								
1.5 i	B5	59	02/1996 → 10/1997		70	12	063532610010	**MAN2610**
SHUMA (FB)								
1.5 i 16V		65	10/1997 → 03/2001		80	12	063532607010	**MAN2607**
1.8 i 16V	T8	81	10/1997 → 03/2001		80	12	063532607010	**MAN2607**
SHUMA II (FB)								
1.6		75	05/2001 → 08/2004		80	12	063532607010	**MAN2607**
1.8	T8	84	04/2003 → 08/2004		80	12	063532607010	**MAN2607**
SHUMA II Tre volumi (FB)								
1.6		75	05/2001 → 05/2004		80	12	063532607010	**MAN2607**
SHUMA Tre volumi (FB)								
1.5	OK280	59	03/1996 → 12/1998		80	12	063532607010	**MAN2607**
1.5 i 16V		65	10/1997 → 10/2001		80	12	063532607010	**MAN2607**
1.8 GX		85	05/1999 → 10/2001		80	12	063532607010	**MAN2607**
SORENTO (JC)								
2.5 CRDi	D4CB	103	08/2002 →		110	12	063532627010	**MAN2627**
SPORTAGE (JE_)								
2.0 16V 4WD	G4GC	104	09/2004 →		90	12	063532602010	**MAN2602**
2.0 CRDi	D4EA	83	02/2005 →		120	12	063532622010	**MAN2622**
2.0 CRDi 4WD	D4EA	83	09/2004 →		120	12	063532622010	**MAN2622**
2.0 i 16V	G4GC	104	09/2004 →		90	12	063532602010	**MAN2602**
SPORTAGE (K00)								
2.0		87	10/2000 → 08/2003		70	12	063532610010	**MAN2610**
2.0 4WD		87	10/2000 → 08/2003		70	12	063532610010	**MAN2610**
2.0 i 16V	FE (16 V)	94	10/1999 → 08/2003		70	12	063532610010	**MAN2610**
2.0 i 16V 4WD	FE (16 V)	94	04/1994 → 11/2002		70	12	063532610010	**MAN2610**
2.0 i 4WD	FE	70	04/1994 → 08/1999		70	12	063532610010	**MAN2610**
2.0 TD 4WD	RF	61	09/2000 → 08/2003		60	12	063532621010	**MAN2621**
LANCIA								
BETA (828_B_)								
1400 (828AB2)	828 A2.000	66	08/1973 → 12/1975		55	12	063321011010	**MAN349**
2000 (828CB1)	828 B1.000	88	04/1976 → 07/1976		55	12	063321011010	**MAN349**
BETA Coupe (828BC)								
2000	828 B1.000	88	04/1976 → 12/1978		55	12	063321011010	**MAN349**
2000 VX		99	07/1983 → 12/1984		55	12	063321011010	**MAN349**
BETA H.P.E. (828BF)								
2000	828 B1.000	88	05/1976 → 05/1976		55	12	063321011010	**MAN349**
BETA Spider (828BS)								
2000 (828BS1)	828 B1.000	88	05/1976 → 12/1978		55	12	063321011010	**MAN349**

		kW		i	A	V	MAGNETI MARELLI LONG	MAGNETI MARELLI SHORT
LANCIA								
DEDRA (835)								
1.6 16V (835EI)	182 A4.000	76	01/1996 → 07/1999		65	12	063321156010	**MAN323**
1.6 16V (835EI)	182 A4.000	76	04/1998 → 07/1999	⊛	85	12	063321328010	**MAN784**
1.6 16V (835EI)	182 A4.000	76	01/1996 → 07/1999		75	12	063321606010	**MAN799**
1.6 16V (835EI)	182 A4.000	76	02/1997 → 07/1999		75	12	063321607010	**MAN800**
1.6 i.e. (835AA)	835 A1.000	66	08/1989 → 12/1992	⊠	65	12	063321156010	**MAN323**
1.6 i.e. (835AA)	835 A1.000	66	08/1989 → 12/1992	⊛ ; ⊠	65	12	063321157010	**MAN322**
1.6 i.e. (835AB)	835 A1.046	57	09/1989 → 03/1993		65	12	063321156010	**MAN323**
1.6 i.e. (835AB)	835 A1.046	57	08/1989 → 03/1993	⊛	65	12	063321157010	**MAN322**
1.6 i.e. (835AN)	835 C1.000	55	04/1993 → 07/1999		65	12	063321156010	**MAN323**
1.6 LE (835EB) Cat.	159 B9.000	66	01/1996 → 07/1999		65	12	063321157010	**MAN322**
1.8 16V LE (835FG)	182 A2.000	83	03/1996 → 07/1999		100	12	063321803010	**MAN1100**
1.8 GT 16V (835EH)	183 A1.000	96	03/1996 → 07/1999		100	12	063321803010	**MAN1100**
1.8 i.e. (835AC, 835BC)	835 A2.000	80	09/1989 → 06/1994		65	12	063321087010	**MAN370**
1.8 i.e. (835AC, 835BC)	835 A2.000	80	09/1989 → 12/1990	⊛	100	12	063321395010	**MAN782**
1.8 i.e. (835AT)	835 C5.000	66	08/1993 → 07/1999		65	12	063321152010	**MAN327**
1.8 i.e. (835BD, 835AD)	835 A2.046	77	09/1989 → 12/1994		65	12	063321087010	**MAN370**
1.8 i.e. (835BD, 835AD)	835 A2.046	77	09/1989 → 07/1999		65	12	063321152010	**MAN327**
1.8 i.e. (835BD, 835AD)	835 A2.046	77	09/1989 → 07/1999	⊛	100	12	063321395010	**MAN782**
1.8 i.e. (835FA)	836 A5.000	74	07/1994 → 08/1997		65	12	063321152010	**MAN327**
1.9 TDS (835EE, 835EF)	160 D1.000, 835 A4.000, 835 A4.046	66	04/1989 → 10/1994		65	12	063321017010	**MAN352**
1.9 TDS (835EE, 835EF)	160 D1.000, 835 A4.000, 835 A4.046	66	01/1994 → 07/1999		55	12	063321191010	**MAN330**
2.0 16V (835ED)	836 A3.000	102	07/1994 → 07/1999	⊛	100	12	063321395010	**MAN782**
2.0 HF Integrale (835AP)	835 A7.046	124	11/1990 → 07/1994		65	12	063321017010	**MAN352**
2.0 HF Integrale (835AP)	835 A7.046	124	11/1990 → 07/1994	⊛	100	12	063321395010	**MAN782**
2.0 i.e. (835AI)	835 A5.000	86	09/1989 → 07/1992		65	12	063321087010	**MAN370**
2.0 i.e. (835AI)	835 A5.000	86	09/1989 → 12/1990	⊛	100	12	063321395010	**MAN782**
2.0 i.e. (835AL)	835 A5.046	83	09/1989 → 10/1994		65	12	063321017010	**MAN352**
2.0 i.e. (835AL)	835 A5.046	83	09/1989 → 12/1990		100	12	063321395010	**MAN782**
2.0 i.e. Turbo (835AR)	835 A8.046	119	04/1991 → 10/1994		65	12	063321017010	**MAN352**
2.0 i.e. Turbo (835AR)	835 A8.046	119	04/1991 → 07/1999		65	12	063321087010	**MAN370**
2.0 i.e. Turbo (835AR)	835 A8.046	119	04/1991 → 10/1994	⊛	100	12	063321395010	**MAN782**
2.0 i.e. Turbo Integrale (835AO)	835 A7.000	121	06/1990 → 07/1992		65	12	063321017010	**MAN352**
2.0 i.e. Turbo Integrale (835AO)	835 A7.000	121	06/1990 → 07/1992	⊛	100	12	063321395010	**MAN782**
2.0 Turbo (835AQ)	835 A8.000	130	11/1990 → 07/1992		65	12	063321017010	**MAN352**
2.0 Turbo (835AQ)	835 A8.000	130	11/1990 → 07/1992	⊛	100	12	063321395010	**MAN782**
DEDRA SW (835)								
1.6 (835EB)	159 B9.000	66	10/1994 → 12/1998		65	12	063321156010	**MAN323**
1.6 16V (835EI)	182 A4.000	76	01/1996 → 07/1999		65	12	063321156010	**MAN323**
1.6 16V (835EI)	182 A4.000	76	04/1998 → 07/1999	⊛	85	12	063321328010	**MAN784**
1.6 16V (835EI)	182 A4.000	76	01/1996 → 07/1999		75	12	063321606010	**MAN799**
1.6 16V (835EI)	182 A4.000	76	02/1997 → 07/1999		75	12	063321607010	**MAN800**
1.8 16V LE (835FG)	182 A2.000	83	03/1996 → 07/1999		100	12	063321803010	**MAN1100**

		kW			A	V	LONG	SHORT
LANCIA								
DEDRA SW (835)								
1.8 GT 16V (835EH)	183 A1.000	96	03/1996 → 07/1999		100	12	063321803010	**MAN1100**
1.8 i.e. (835FA)	836 A5.000	74	07/1994 → 08/1997		65	12	063321152010	**MAN327**
1.9 TDS (835EE, 835EF)	160 D1.000, 835 A4.000	66	07/1994 → 10/1994		65	12	063321017010	**MAN352**
1.9 TDS (835EE, 835EF)	160 D1.000, 835 A4.000	66	07/1994 → 07/1999	⊛	55	12	063321191010	**MAN330**
2.0 16V (835ED)	836 A3.000	102	07/1994 → 07/1999	⊛	100	12	063321395010	**MAN782**
2.0 Integrale (835ED)	836 A3.000	102	10/1994 → 07/1999	⊛	100	12	063321395010	**MAN782**
DELTA I (831AB0)								
1.1 (831AB.015)	831 B8.000	47	01/1986 → 12/1990		55	12	063321154010	**MAN344**
1.3	831 A2.000	58	09/1983 → 08/1992		55	12	063321112010	**MAN379**
1.3	831 A2.000	58	01/1986 → 08/1992		55	12	063321154010	**MAN344**
1.3 (831AB.011)	831 A2.000, 831 B.000	55	09/1979 → 08/1992		55	12	063321112010	**MAN379**
1.3 (831AB.011)	831 A2.000, 831 B.000	55	09/1982 → 04/1986		55	12	063321154010	**MAN344**
1.5 (831AB.025)	831 A1.000, 831 B1.000	63	09/1979 → 12/1992		55	12	063321112010	**MAN379**
1.5 (831AB.025)	831 A1.000, 831 B1.000	63	09/1982 → 06/1987		55	12	063321154010	**MAN344**
1.5 (831AB.025)	831 A1.000, 831 B1.000	63	09/1982 → 06/1987		65	12	063321157010	**MAN322**
1.6 GT	831 A4.000	77	11/1982 → 04/1986		55	12	063321011010	**MAN349**
1.6 GT i.e. (831AB.010)	149 C2.000	66	05/1987 → 08/1992		65	12	063321062010	**MAN298**
1.6 HF Turbo	831 A7.000	96	10/1983 → 12/1986		55	12	063321011010	**MAN349**
1.9 Turbo DS (831AB.021)	831 D1.000	59	10/1986 → 12/1989		65	12	063321017010	**MAN352**
2.0 16V HF Evo Integrale (831AB.027)	831 E5.000, 831 E5.046	155	06/1993 → 01/1994		65	12	063321062010	**MAN298**
2.0 16V HF Integrale (831AB.026)	831 D5.000	144	08/1989 → 09/1991		65	12	063321062010	**MAN298**
2.0 HF Integrale (831AB.019)	831 B5.000	122	11/1986 → 08/1988		65	12	063321062010	**MAN298**
2.0 HF Integrale (831AB.024)	831 C5.000	133	10/1987 → 02/1989		65	12	063321062010	**MAN298**
2.0 HF Integrale (831AB.024S, 831AB.028)	831 C5.046	130	05/1987 → 12/1992		65	12	063321062010	**MAN298**
DELTA II (836)								
1.4 i.e. (836AF, 836AH)	160 A1.046, 836 A4.000	51	10/1994 → 08/1999		65	12	063321156010	**MAN323**
1.6 i.e. (836AD)	835 C1.000	55	06/1993 → 08/1999		65	12	063321156010	**MAN323**
1.6 i.e. (836AP)	182 A6.000	66	03/1996 → 08/1999		65	12	063321156010	**MAN323**
1.6 i.e. (836AP)	182 A6.000	66	03/1996 → 08/1999	⊛	85	12	063321328010	**MAN784**
1.6 i.e. (836AP)	182 A6.000	66	03/1996 → 08/1999		75	12	063321607010	**MAN800**
1.6 i.e. 16V (836AO)	182 A4.000	76	01/1996 → 08/1999	⊛	85	12	063321328010	**MAN784**
1.6 i.e. 16V (836AO)	182 A4.000	76	01/1996 → 08/1999	◎	75	12	063321606010	**MAN799**
1.6 i.e. 16V (836AO)	182 A4.000	76	01/1996 → 08/1999	◎	75	12	063321607010	**MAN800**
1.8		66	02/1996 → 09/1999		100	12	063321395010	**MAN782**
1.8 i.e. (836AE)	835 C2.000	76	06/1993 → 08/1999		65	12	063321152010	**MAN327**
1.8 i.e. (836AE)	835 C2.000	76	06/1993 → 08/1999		100	12	063321395010	**MAN782**

		kW		i	A	V	MAGNETI MARELLI LONG	MAGNETI MARELLI SHORT
LANCIA								
DELTA II (836)								
1.8 i.e. (836AG, 836AL)	835 C4.000, 836 A6.000, 836 C4.000	66	07/1994 → 08/1999		65	12	063321152010	**MAN327**
1.8 i.e. (836AG, 836AL)	835 C4.000, 836 A6.000, 836 C4.000	66	07/1994 → 08/1999		100	12	063321395010	**MAN782**
1.8 i.e. 16V (836AQ)	182 A2.000	83	03/1996 → 08/1999		100	12	063321803010	**MAN1100**
1.8 i.e. 16V GT (836AR)	183 A1.000	96	03/1996 → 08/1999		100	12	063321803010	**MAN1100**
1.8 i.e. 16V GT (836AR)	183 A1.000	96	03/1996 → 08/1999		120	12	063321859010	**MAN1117**
1.9 TD (836AM, 836AN)	160 D1.000, 835 A4.000	66	10/1994 → 08/1999	⊛	55	12	063321191010	**MAN330**
2.0 16V (836AA, 836CA)	836 A3.000	102	06/1993 → 12/1995		65	12	063321017010	**MAN352**
2.0 16V (836AA, 836CA)	836 A3.000	102	06/1993 → 08/1999		100	12	063321395010	**MAN782**
2.0 16V Turbo (836AB)	836 A2.000	137	06/1993 → 08/1999	⊛	100	12	063321395010	**MAN782**
2.0 16V Turbo (836AS)	175 A4.000	142	07/1996 → 08/1999		55	12	063321191010	**MAN330**
2.0 16V Turbo (836AS)	175 A4.000	142	07/1996 → 08/1999	⊛	100	12	063321395010	**MAN782**
DELTA III (844)								
1.4	198 A1.000	110	09/2008 →	⊛	120	12	063377426010	**MAN7426**
1.4	198 A4.000	88	09/2008 →	⊛	120	12	063377426010	**MAN7426**
1.6 D Multijet	198 A2.000	88	06/2009 →		100	12	063377017010	**MAN7017**
1.6 D Multijet	198 A2.000	88	09/2008 →		120	12	063377018010	**MAN7018**
1.8	939 B1.000	147	01/2009 →		120	12	063377026010	**MAN7026**
1.9 D Multijet	844 A1.000	140	01/2009 →		100	12	063377017010	**MAN7017**
1.9 D Multijet	844 A1.000	140	01/2009 →		120	12	063377018010	**MAN7018**
2.0 D Multijet	198 A5.000	121	09/2008 →		100	12	063377017010	**MAN7017**
2.0 D Multijet	198 A5.000	121	09/2008 →		120	12	063377018010	**MAN7018**
KAPPA (838A)								
2.0 20V (838AA1AA)	838 A1.000	107	10/1994 → 10/2001		90	12	063321729010	**MAN1107**
2.0 20V (838AA1AA)	838 A1.000	107	10/1994 → 10/2001		120	12	063321859010	**MAN1117**
2.0 20V (838AG1AA, 838AG11A)	838 A6.000	114	09/1996 → 10/2001		90	12	063321729010	**MAN1107**
2.0 20V (838AG1AA, 838AG11A)	838 A6.000	114	07/1996 → 10/1996		120	12	063321858010	**MAN1116**
2.4 20V (838AC1AA, 838AC11A)	838 A2.000, 838 A2.027	129	10/1994 → 10/2001		90	12	063321729010	**MAN1107**
2.4 20V (838AC1AA, 838AC11A)	838 A2.000, 838 A2.027	129	10/1994 → 10/2001		120	12	063321858010	**MAN1116**
2.4 JTD (838AL1AA)	838 A8.000	100	06/1998 → 10/2001		90	12	063321729010	**MAN1107**
2.4 JTD (838AL1AA)	838 A8.000	100	06/1998 → 10/2001		120	12	063321859010	**MAN1117**
2.4 T.DS (838AE1AA, 838AH1AA)	838 A3.000, 838 A7.000	91	08/1994 → 10/2001		90	12	063321729010	**MAN1107**
2.4 T.DS (838AE1AA, 838AH1AA)	838 A3.000, 838 A7.000	91	01/1998 → 10/2001		120	12	063321859010	**MAN1117**
KAPPA SW (838B)								
2.0 20V (838BG1AA)	838 A6.000	114	09/1996 → 05/2001		90	12	063321729010	**MAN1107**
2.0 20V (838BG1AA)	838 A6.000	114	09/1996 → 05/2001		120	12	063321858010	**MAN1116**
2.4 20V (838BC1AA, 838BC11A)	838 A2.000	129	09/1996 → 10/2001		90	12	063321729010	**MAN1107**
2.4 20V (838BC1AA, 838BC11A)	838 A2.000	129	09/1996 → 10/2001		120	12	063321858010	**MAN1116**
2.4 JTD (838BL1AA)	838 A8.000	100	06/1998 → 05/2001		90	12	063321729010	**MAN1107**
2.4 JTD (838BL1AA)	838 A8.000	100	06/1998 → 10/2001		120	12	063321859010	**MAN1117**

		kW			A	V	LONG	SHORT
LANCIA								
KAPPA SW (838B)								
2.4 T.DS (838BH1AA)	838 A3.000, 838 A7.000	91	09/1996 → 02/1998		90	12	063321729010	**MAN1107**
2.4 T.DS (838BH1AA)	838 A3.000, 838 A7.000	91	01/1998 → 10/2001		120	12	063321859010	**MAN1117**
LYBRA (839AX)								
1.6	182 B6.000	76	10/2000 → 09/2005		105	12	063534150120	**MAN2042**
1.6 16V (839AXA1A)	182 A4.000	76	10/2000 →		90	12	063533250580	**MAN2002**
1.6 16V (839AXA1A)	182 A4.000	76	07/1999 →		110	12	063533250590	**MAN2040**
1.6 16V (839AXA1A)	182 A4.000	76	10/1999 → 09/2005		105	12	063534150120	**MAN2042**
1.8 16V (839AXB1A, 839AXG1A)	839 A4.000, 839 A7.000, 839 A9.000	96	07/1999 →		90	12	063321729010	**MAN1107**
1.8 16V (839AXB1A, 839AXG1A)	839 A4.000, 839 A7.000, 839 A9.000	96	07/1999 →		120	12	063321859010	**MAN1117**
1.9 JTD	937 A2.000	85	05/2001 →		90	12	063321729010	**MAN1107**
1.9 JTD	937 A2.000	85	05/2001 →		85	12	063321802010	**MAN1102**
1.9 JTD	937 A2.000	85	05/2001 →		105	12	063321826010	**MAN1127**
1.9 JTD	937 A2.000	85	05/2001 →		120	12	063321859010	**MAN1117**
1.9 JTD (839AXD1A)	AR 32302	77	07/1999 → 09/2000	⊛	90	12	063321729010	**MAN1107**
1.9 JTD (839AXD1A)	AR 32302	77	07/1999 → 09/2000	⊛	85	12	063321802010	**MAN1102**
1.9 JTD (839AXD1A)	AR 32302	77	07/1999 → 09/2000	⊛	120	12	063321858010	**MAN1116**
1.9 JTD (839AXI1A)	AR 37101	81	10/2000 → 05/2001		90	12	063321729010	**MAN1107**
1.9 JTD (839AXI1A)	AR 37101	81	09/2000 → 05/2001		105	12	063321826010	**MAN1127**
1.9 JTD (839AXI1A)	AR 37101	81	09/2000 → 05/2001		120	12	063321859010	**MAN1117**
2.0 20V (839AXC11, 839AXC1A)	182 B7.000	113	10/1999 → 09/2000	⊛	85	12	063321402010	**MAN791**
2.0 20V (839AXH1A)	185 A8.000	110	10/2000 → 09/2005	⊛	85	12	063321402010	**MAN791**
2.4 JTD	841 C.000	110	05/2002 →		90	12	063321729010	**MAN1107**
2.4 JTD	841 C.000	110	05/2002 →		120	12	063321859010	**MAN1117**
2.4 JTD (839AXE1A)	839 A5.000, AR 32501	99	07/1999 → 09/2000		90	12	063321729010	**MAN1107**
2.4 JTD (839AXE1A)	839 A5.000, AR 32501	99	07/1999 → 09/2000		120	12	063321859010	**MAN1117**
2.4 JTD (839AXL1A)	839 A6.000	103	10/2000 → 04/2002		90	12	063321729010	**MAN1107**
2.4 JTD (839AXL1A)	839 A6.000	103	09/2000 → 05/2002		120	12	063321859010	**MAN1117**
LYBRA SW (839BX)								
1.6	182 B6.000	76	10/2000 → 09/2005		105	12	063534150120	**MAN2042**
1.6 16V (839BXA1A)	182 A4.000	76	10/2000 →		90	12	063533250580	**MAN2002**
1.6 16V (839BXA1A)	182 A4.000	76	07/1999 →		110	12	063533250590	**MAN2040**
1.6 16V (839BXA1A)	182 A4.000	76	10/1999 → 09/2005		105	12	063534150120	**MAN2042**
1.8 16V (839BXB1A, 839BXG1A)	839 A4.000, 839 A7.000	96	07/1999 →		90	12	063321729010	**MAN1107**
1.8 16V (839BXB1A, 839BXG1A)	839 A4.000, 839 A7.000	96	07/1999 →		120	12	063321859010	**MAN1117**
1.9 JTD	937 A2.000	85	05/2001 →		90	12	063321729010	**MAN1107**
1.9 JTD	937 A2.000	85	05/2001 →		105	12	063321826010	**MAN1127**
1.9 JTD	937 A2.000	85	05/2001 →		120	12	063321859010	**MAN1117**
1.9 JTD (839BXD1A)	AR 32302	77	07/1999 → 09/2000	⊛	90	12	063321729010	**MAN1107**
1.9 JTD (839BXD1A)	AR 32302	77	07/1999 → 09/2000	⊛	85	12	063321802010	**MAN1102**
1.9 JTD (839BXD1A)	AR 32302	77	07/1999 → 09/2000		120	12	063321859010	**MAN1117**

		kW		i	A	V	LONG	SHORT
LANCIA								
LYBRA SW (839BX)								
1.9 JTD (839BXI1A)	AR 37101	81	10/2000 → 05/2001		90	12	063321729010	**MAN1107**
1.9 JTD (839BXI1A)	AR 37101	81	09/2000 → 05/2001		105	12	063321826010	**MAN1127**
1.9 JTD (839BXI1A)	AR 37101	81	09/2000 → 05/2001		120	12	063321859010	**MAN1117**
2.0 20V (839BXC11, 839BXC1A)	182 B7.000	113	10/1999 → 09/2000	⊛	85	12	063321402010	**MAN791**
2.0 20V (839BXH1A)	185 A8.000	110	09/2000 → 09/2005	⊛	85	12	063321402010	**MAN791**
2.4 JTD	841 C.000	110	05/2002 →		90	12	063321729010	**MAN1107**
2.4 JTD	841 C.000	110	05/2002 →		120	12	063321859010	**MAN1117**
2.4 JTD (839BXE1A)	839 A5.000, AR 32501	99	10/1999 → 09/2000		90	12	063321729010	**MAN1107**
2.4 JTD (839BXE1A)	839 A5.000, AR 32501	99	10/1999 → 09/2000		120	12	063321859010	**MAN1117**
2.4 JTD (839BXL1A)	839 A6.000	103	10/2000 →		90	12	063321729010	**MAN1107**
2.4 JTD (839BXL1A)	839 A6.000	103	09/2000 →		120	12	063321859010	**MAN1117**
MUSA (350)								
1.3 D Multijet	188 A9.000	51	10/2004 →		90	12	063358061010	**MAN1097**
1.3 D Multijet	188 A9.000	51	10/2004 →		105	12	063377494010	**MAN7494**
1.3 D Multijet	199 A3.000	66	09/2006 →		90	12	063358061010	**MAN1097**
1.3 D Multijet	199 A3.000	66	09/2006 →		75	12	063358062010	**MAN1098**
1.3 D Multijet	199 A3.000	66	09/2006 →	⊛	105	12	063377023010	**MAN7023**
1.3 D Multijet	199 A3.000	66	09/2006 →	⊛	120	12	063377028010	**MAN7028**
1.4	843 A 1.000	70	10/2004 →	⊙	90	12	063377010010	**MAN7010**
1.4	843 A 1.000	70	10/2004 →	⊙	90	12	063377013010	**MAN7013**
1.4	843 A 1.000	70	10/2004 →	⊛	120	12	063377027010	**MAN7027**
1.4	350 A1.000	57	09/2005 →		70	12	063377006010	**MAN7006**
1.6 D Multijet	350 A2.000	88	07/2008 →	⊛	100	12	063377017010	**MAN7017**
1.6 D Multijet	350 A2.000	88	07/2008 →	⊛	120	12	063377426010	**MAN7426**
1.9 D Multijet	188 B2.000	74	10/2007 →	⊛	105	12	063321826010	**MAN1127**
1.9 D Multijet	188 B2.000	74	10/2004 →		90	12	063377016010	**MAN7016**
PHEDRA (179)								
2.0 (179AXA11)	RFN(EW10J4)	100	09/2002 → 12/2003		90	12	063321734010	**MAN963**
PRISMA (831AB0)								
1.3	831 A2.000	58	01/1983 → 12/1989		55	12	063321154010	**MAN344**
1.5	138 C2.048, 831 B1.048	55	12/1985 → 12/1986		65	12	063321157010	**MAN322**
1.5	831 A1.000	63	01/1984 → 04/1986		55	12	063321154010	**MAN344**
1.5	831 A1.000	63	01/1983 → 04/1986		65	12	063321157010	**MAN322**
1.5	831 B1.000	59	08/1986 → 12/1989		55	12	063321154010	**MAN344**
1.5	831 B1.000	59	08/1986 → 12/1989		65	12	063321157010	**MAN322**
1.6	831 A4.000	77	12/1982 → 04/1986		55	12	063321011010	**MAN349**
1.9 Diesel	831 D.000	48	06/1984 → 12/1989		55	12	063321011010	**MAN349**
1.9 Turbo Diesel	831 D1.000	59	05/1985 → 12/1989		65	12	063321017010	**MAN352**
2.0 i.e. 4WD	831 B4.000	85	04/1986 → 12/1989		65	12	063321062010	**MAN298**
THEMA (834)								
2000 16V (834FA)	834 F1.000	112	08/1992 → 12/1993		65	12	063321087010	**MAN370**

		kW			A	V	LONG	SHORT
LANCIA								
THEMA (834)								
2000 16V (834FA)	834 F1.000	112	08/1992 → 12/1993		100	12	063321395010	**MAN782**
2000 16V Turbo (834AC)	834 C1.000	133	12/1988 → 06/1990		65	12	063321087010	**MAN370**
2000 16V Turbo (834AC)	834 C1.000	133	12/1988 → 06/1990	⊛	100	12	063321395010	**MAN782**
2000 16V Turbo (834GC, 834FC)	834 F2.000	148	10/1992 → 07/1994		65	12	063321087010	**MAN370**
2000 16V Turbo (834GC, 834FC)	834 F2.000	148	10/1992 → 07/1994		100	12	063321395010	**MAN782**
2000 i.e (834AB)	834 B1.000	86	09/1988 → 05/1992		65	12	063321087010	**MAN370**
2000 i.e (834AB)	834 B1.000	86	09/1988 → 05/1992		100	12	063321395010	**MAN782**
2000 i.e.	834 B.048	83	03/1986 → 08/1988		65	12	063321017010	**MAN352**
2000 i.e.	834 B.048	83	06/1987 → 09/1988		65	12	063321152010	**MAN327**
2000 i.e.	834 B.048	83	03/1986 → 09/1988		100	12	063321395010	**MAN782**
2000 i.e. (834B)	834 B.000	88	12/1985 → 08/1988		65	12	063321017010	**MAN352**
2000 i.e. (834B)	834 B.000	88	11/1984 → 09/1988		65	12	063321152010	**MAN327**
2000 i.e. (834B)	834 B.000	88	11/1984 → 09/1988		100	12	063321395010	**MAN782**
2000 i.e. (834BV)	834 B.146	85	01/1988 → 05/1992		65	12	063321087010	**MAN370**
2000 i.e. (834BV)	834 B.146	85	05/1992 → 05/1992		100	12	063321395010	**MAN782**
2000 i.e. 16V (834AA)	834 B2.000	108	05/1988 → 08/1992		65	12	063321087010	**MAN370**
2000 i.e. 16V (834AA)	834 B2.000	108	06/1988 → 05/1992	⊛	100	12	063321395010	**MAN782**
2000 i.e. 16V (834AI)	834 B2.246	104	02/1989 → 05/1992		65	12	063321087010	**MAN370**
2000 i.e. 16V (834AI)	834 B2.246	104	02/1989 → 05/1992	⊛	100	12	063321395010	**MAN782**
2000 i.e. 16V Turbo (834AL)	834 C1.246	130	04/1989 → 05/1992		65	12	063321087010	**MAN370**
2000 i.e. 16V Turbo (834AL)	834 C1.246	130	04/1989 → 05/1992	⊛	100	12	063321395010	**MAN782**
2000 i.e. Turbo (834C)	834 C.000	122	12/1985 → 12/1987		65	12	063321017010	**MAN352**
2000 i.e. Turbo (834C)	834 C.000	122	11/1984 → 12/1987		100	12	063321395010	**MAN782**
2000 i.e.Turbo (834CV)	834 C.146	110	07/1986 → 08/1988		65	12	063321017010	**MAN352**
2000 i.e.Turbo (834CV)	834 C.146	110	07/1986 → 05/1990		65	12	063321152010	**MAN327**
2000 i.e.Turbo (834CV)	834 C.146	110	07/1986 → 05/1990		100	12	063321395010	**MAN782**
2500 Turbo D (834D)	8144.91	74	11/1984 → 09/1988	◎	65	12	063320049010	**MAN771**
2500 Turbo D (834D)	8144.91	74	11/1984 → 09/1988		65	12	063321019010	**MAN274**
2500 Turbo DS (834AE)	8144.97	85	06/1988 → 05/1992	◎	65	12	063320049010	**MAN771**
2500 Turbo DS (834AE)	8144.97	85	06/1988 → 05/1992		65	12	063321019010	**MAN274**
2500 Turbo DS (834AM)	8144. 97S	77	06/1988 → 05/1992		65	12	063320049010	**MAN771**
2500 Turbo DS (834FE, 834LE)	8144.97 Y	85	05/1992 → 07/1994		65	12	063321019010	**MAN274**
THEMA SW (834)								
2000 16V (834FA)	834 F1.000	112	05/1992 → 07/1994		65	12	063321087010	**MAN370**
2000 16V (834FA)	834 F1.000	112	05/1992 → 07/1994		100	12	063321395010	**MAN782**
2000 i.e. 16V (834AA)	834 B2.000	108	05/1989 → 08/1992		65	12	063321087010	**MAN370**
2000 i.e. 16V (834AA)	834 B2.000	108	05/1989 → 05/1992	⊛	100	12	063321395010	**MAN782**
2000 i.e. 16V (834AI)	834 B2.246	104	02/1989 → 05/1992		65	12	063321087010	**MAN370**
2000 i.e. 16V (834AI)	834 B2.246	104	02/1989 → 05/1992	⊛	100	12	063321395010	**MAN782**
2000 i.e. 16V Turbo (834AC)	834 C1.000	133	12/1988 → 06/1990		65	12	063321087010	**MAN370**
2000 i.e. 16V Turbo (834AC)	834 C1.000	133	12/1988 → 06/1990	⊛	100	12	063321395010	**MAN782**

		kW		i	A	V	MAGNETI MARELLI LONG	MAGNETI MARELLI SHORT
LANCIA								
THEMA SW (834)								
2000 i.e. 16V Turbo (834AL)	834 C1.246	130	04/1989 → 03/1993		65	12	063321087010	**MAN370**
2000 i.e. 16V Turbo (834AL)	834 C1.246	130	04/1989 → 05/1992	⊛	100	12	063321395010	**MAN782**
2000 Turbo	834 C.146	110	01/1989 → 03/1992		65	12	063321087010	**MAN370**
2000 Turbo	834 C.146	110	01/1989 → 03/1992		100	12	063321395010	**MAN782**
2000 Turbo 16V (834GC, 834FC)	834 F2.000	148	11/1992 → 07/1994		65	12	063321087010	**MAN370**
2000 Turbo 16V (834GC, 834FC)	834 F2.000	148	11/1992 → 07/1994		100	12	063321395010	**MAN782**
2500 Turbo DS (834AE)	8144.97	85	06/1988 → 05/1992		65	12	063320049010	**MAN771**
2500 Turbo DS (834AM)	8144. 97S	77	05/1988 → 07/1992	⊙	65	12	063320049010	**MAN771**
2500 Turbo DS (834AM)	8144. 97S	77	05/1988 → 07/1992		65	12	063321019010	**MAN274**
2500 Turbo DS (834D)	8144.91	74	03/1987 → 12/1988	⊙	65	12	063320049010	**MAN771**
2500 Turbo DS (834D)	8144.91	74	03/1987 → 12/1988		65	12	063321019010	**MAN274**
2500 Turbo DS (834FE, 834LE)	8144.97 Y	85	01/1993 → 11/1994		65	12	063321019010	**MAN274**
THESIS (841AX)								
2.4 D Multijet	841 P.000	136	04/2006 →		140	12	063321862010	**MAN1162**
2.4 JTD	841 G.000	129	09/2003 →		140	12	063321862010	**MAN1162**
2.4 JTD (841AXD1B02)	841 C.000	110	07/2002 →		140	12	063321862010	**MAN1162**
Y (840A)								
1.1 (840AE)	176 B2.000	40	11/1995 → 01/2000		65	12	063321173010	**MAN331**
1.1 (840AE)	176 B2.000	40	01/1997 → 09/2003		75	12	063321604010	**MAN798**
1.1 (840AE)	176 B2.000	40	11/1995 → 09/2003		65	12	063321615010	**MAN807**
1.1 (840AE)	176 B2.000	40	01/1997 → 09/2003		65	12	063321747010	**MAN1041**
1.2 (840AA, 840AF1A)	188 A4.000, 840 A3.000	44	03/1996 → 01/2000		65	12	063321173010	**MAN331**
1.2 (840AA, 840AF1A)	188 A4.000, 840 A3.000	44	03/1996 → 06/2000	⊛	75	12	063321604010	**MAN798**
1.2 (840AA, 840AF1A)	188 A4.000, 840 A3.000	44	03/1996 → 09/2003		65	12	063321615010	**MAN807**
1.2 (840AA, 840AF1A)	188 A4.000, 840 A3.000	44	03/1996 → 09/2003	⊛	70	12	063377008010	**MAN7008**
1.2 16V (840AD)	176 B9.000	63	04/1997 → 01/2000		65	12	063321173010	**MAN331**
1.2 16V (840AD)	176 B9.000	63	04/1997 → 08/2000	⊛	90	12	063321715010	**MAN1039**
1.2 16V (840AD)	176 B9.000	63	04/1997 → 09/2003	⊛	70	12	063377008010	**MAN7008**
1.2 16V (840AG1A)	188 A5.000	59	10/2000 → 09/2003		90	12	063321715010	**MAN1039**
1.2 16V (840AG1A)	188 A5.000	59	10/2000 → 09/2003	⊛	70	12	063377008010	**MAN7008**
1.4 12V (840AB)	840 A2.000	59	10/1996 → 09/2003		90	12	063321729010	**MAN1107**
1.4 12V (840AB)	840 A2.000	59	10/1996 → 09/2003		85	12	063321810010	**MAN1147**
1.4 12V (840AB)	840 A2.000	59	10/1996 → 08/2000	⊛	75	12	063321813010	**MAN1151**
1.4 12V (840AB)	840 A2.000	59	01/2001 → 09/2003		65	12	063321839010	**MAN1119**
1.4 12V (840AC)	840 A4.000	55	03/1996 → 09/2003		90	12	063321729010	**MAN1107**
1.4 12V (840AC)	840 A4.000	55	03/1996 → 09/2003		85	12	063321810010	**MAN1147**
1.4 12V (840AC)	840 A4.000	55	03/1996 → 08/2000	⊛	75	12	063321813010	**MAN1151**
1.4 12V (840AC)	840 A4.000	55	01/2001 → 09/2003		65	12	063321839010	**MAN1119**
Y10 (156)								
1.0 Fire	156 A 2.000	37	03/1985 → 02/1990		45	12	063321000010	**MAN342**

		kW			A	V	LONG	SHORT
LANCIA								
Y10 (156)								
1.0 Fire (156AA)	156 A 2.000	33	03/1985 → 06/1989		45	12	063321000010	**MAN342**
1.0 Fire (156AA)	156 A 2.000	33	03/1985 → 06/1989		55	12	063321067010	**MAN300**
1.0 Fire (156AE) Cat.	156 A2.246	33	10/1987 → 02/1992		45	12	063321000010	**MAN342**
1.0 Fire (156AE) Cat.	156 A2.246	33	10/1987 → 02/1992		55	12	063321067010	**MAN300**
1.0 Fire (156B, 156AD)	156 A 2.100	32	01/1989 → 06/1991		45	12	063321000010	**MAN342**
1.0 Fire (156B, 156AD)	156 A 2.100	32	01/1989 → 06/1991		55	12	063321067010	**MAN300**
1.0 Fire 4WD	156 A 2.000	37	12/1987 → 06/1989		45	12	063321000010	**MAN342**
1.0 Fire 4WD	156 A 2.100	32	12/1986 → 02/1989		45	12	063321000010	**MAN342**
1.0 Fire 4WD	156 A 2.100	32	12/1986 → 02/1989		55	12	063321067010	**MAN300**
1.0 Fire 4WD (156AE)	156 A2.246	33	12/1987 → 12/1989		45	12	063321000010	**MAN342**
1.0 Fire 4WD (156AE)	156 A2.246	33	12/1987 → 12/1989		55	12	063321067010	**MAN300**
1.1 Avenue (156AG)	176 B2.000	40	01/1995 → 12/1995		65	12	063321173010	**MAN331**
1.1 Avenue 4WD (156AG)	176 B2.000	40	01/1995 → 12/1995		65	12	063321173010	**MAN331**
1.1 i.e (156AC)	156 C.000	42	08/1989 → 06/1992		45	12	063321000010	**MAN342**
1.1 i.e (156AC)	156 C.000	42	08/1989 → 06/1992		55	12	063321067010	**MAN300**
1.1 i.e (156AC)	156 C.000	42	08/1989 → 06/1992		65	12	063321173010	**MAN331**
1.1 i.e 4WD (156AC)	156 C.000	42	08/1989 → 06/1992		55	12	063321067010	**MAN300**
1.1 i.e. Fire (156AG)	156 C.046	37	07/1989 → 09/1995		55	12	063321044010	**MAN286**
1.1 i.e. Fire (156AG)	156 C.046	37	07/1989 → 09/1995		55	12	063321067010	**MAN300**
1.1 i.e. Fire (156AG)	156 C.046	37	07/1989 → 09/1995		65	12	063321173010	**MAN331**
1.1 i.e. Fire 4WD (156AG)	156 C.046	37	09/1992 → 12/1995		55	12	063321044010	**MAN286**
1.1 i.e. Fire 4WD (156AG)	156 C.046	37	09/1992 → 12/1995		55	12	063321067010	**MAN300**
1.1 i.e. Fire 4WD (156AG)	156 C.046	37	09/1992 → 12/1995		65	12	063321173010	**MAN331**
YPSILON (843)								
1.2	188 A5.000	59	10/2003 →		70	12	063377001010	**MAN7001**
1.2	188 A5.000	59	10/2003 →		90	12	063377010010	**MAN7010**
1.2	188 A4.000	44	10/2003 →		90	12	063377010010	**MAN7010**
1.2	188 A4.000	44	10/2003 →		70	12	063377011010	**MAN7011**
1.2		44	10/2003 →		70	12	063377012010	**MAN7012**
1.2		59	10/2003 →		70	12	063377012010	**MAN7012**
1.3 D Multijet	199 A2.000	55	09/2006 →		75	12	063358062010	**MAN1098**
1.3 D Multijet	199 A3.000	77	05/2007 →		75	12	063358062010	**MAN1098**
1.3 D Multijet	199 A3.000	66	09/2006 →		75	12	063377021010	**MAN7021**
1.3 D Multijet	199 A3.000	66	09/2006 →		70	12	063377024010	**MAN7024**
1.3 JTD	188 A9.000	51	10/2003 → 09/2006		90	12	063358061010	**MAN1097**
1.3 JTD	188 A9.000	51	10/2003 → 09/2006		75	12	063358062010	**MAN1098**
1.4	350 A1.000	57	02/2006 →		70	12	063377011010	**MAN7011**
1.4 16V	843 A 1.000	70	10/2003 →		90	12	063377010010	**MAN7010**
1.4 16V	843 A 1.000	70	10/2003 →		70	12	063377011010	**MAN7011**
1.4 16V	843 A 1.000	70	10/2003 →		90	12	063377013010	**MAN7013**

		kW		i	A	V	MAGNETI MARELLI LONG	MAGNETI MARELLI SHORT
LAND ROVER								
88/109								
2.3 (LR 88 OL, LR 109 OL)		51	09/1983 → 12/1986		45	12	063324199010	**MAN107**
2.3 D (LR 88 DL, LR 109 DL)		46	09/1983 → 12/1986		45	12	063324199010	**MAN107**
88/109 Hardtop								
2.3 (LR 88 OP, LR 109 OP)		51	09/1983 → 12/1986		45	12	063324199010	**MAN107**
2.3 D (LR 88 DP, LR 109 DP)		46	09/1983 → 12/1986		45	12	063324199010	**MAN107**
90/110 (DHMC)								
2.5	17H	62	01/1987 → 07/1990		45	12	063324199010	**MAN107**
2.5 TD		63	01/1987 → 07/1990		45	12	063324199010	**MAN107**
DEFENDER Station Wagon (LD)								
2.5 90,110 TDI	11 L, 16 L, 23 L	83	09/1990 → 12/1998		45	12	063324199010	**MAN107**
RANGE ROVER I (AE, AN, HAA, HAB, HAM, HBM, RE, RN)								
3.9 Cat.	37 D, 38 D	127	11/1988 → 07/1994		100	12	063377463010	**MAN7463**
3.9 Vogue SEI	35 D, 36 D	134	11/1988 → 07/1994		100	12	063377463010	**MAN7463**
MAZDA								
2 (DY)								
1.4 CD	F6JA, F6JB	50	04/2003 →		80	12	063380002010	**MAN8002**
3 (BK)								
1.6 DI Turbo	Y601	80	06/2004 →		150	12	063377416010	**MAN7416**
3 Tre volumi (BK)								
1.6 DI Turbo	Y601	80	06/2004 →		150	12	063377416010	**MAN7416**
MERCEDES-BENZ								
190 (W201)								
2.0 (201.023)	M 102.924	77	09/1988 → 05/1990		70	12	063534893260	**MAN2017**
2.0 (201.023)	M 102.924	75	09/1988 → 05/1990		70	12	063534893260	**MAN2017**
2.3	M 102.985	97	09/1987 → 09/1988		70	12	063534893260	**MAN2017**
D 2.0 (201.122)	OM 601.911	55	09/1989 → 08/1993		70	12	063534893260	**MAN2017**
D 2.0 (201.122)	OM 601.911	53	09/1983 → 08/1989		70	12	063534893260	**MAN2017**
D 2.5 (201.126)	OM 602.911	69	09/1989 → 03/1993		70	12	063534893260	**MAN2017**
D 2.5 (201.126)	OM 602.911	66	04/1985 → 08/1993		70	12	063534893260	**MAN2017**
E 1.8 (201.018)	M 102.910	80	04/1990 → 08/1993		70	12	063534893260	**MAN2017**
E 2.0		93	10/1982 → 08/1989		70	12	063534893260	**MAN2017**
E 2.0	M 102.962	87	09/1986 → 08/1993		70	12	063534893260	**MAN2017**
E 2.0 (201.024)	M 102.961, M 102.962	83	09/1985 → 08/1986		70	12	063534893260	**MAN2017**
E 2.0 (201.024)	M 102.962	85	09/1985 → 08/1986		70	12	063534893260	**MAN2017**
E 2.0 (201.024)	M 102.961, M 102.962	90	09/1986 → 08/1989		70	12	063534893260	**MAN2017**
E 2.3	M 102.985	97	09/1989 → 08/1991		70	12	063534893260	**MAN2017**
E 2.3 (201.028)	M 102.985	100	10/1986 → 08/1993		70	12	063534893260	**MAN2017**
E 2.3-16	M 102.983	130	09/1985 → 08/1988		70	12	063534893260	**MAN2017**
E 2.3-16	M 102.983	125	09/1985 → 12/1987		70	12	063534893260	**MAN2017**
E 2.3-16 (201.034)	M 102.983	136	04/1985 → 01/1987		70	12	063534893260	**MAN2017**
E 2.5-16	M 102.990	150	09/1988 → 08/1993		70	12	063534893260	**MAN2017**
E 2.6	M 103.942	122	09/1986 → 12/1989		70	12	063534893260	**MAN2017**

		kW			A	V	LONG	SHORT
MERCEDES-BENZ								
190 (W201)								
E 2.6 (201.029)	M 103.942	118	09/1986 → 08/1993		70	12	063534893260	**MAN2017**
E Evolution II 2.5	M 102.992	173	05/1990 → 08/1993		70	12	063534893260	**MAN2017**
Turbo-D 2.5 (201.128)	OM 602.961	90	02/1988 → 12/1988		70	12	063534893260	**MAN2017**
Turbo-D 2.5 (201.128)	OM 602.961	93	09/1988 → 08/1993		70	12	063534893260	**MAN2017**
CLASSE C (W204)								
C 280 4-matic (204.081)	M 272.948	170	06/2009 →		100	12	063377017010	**MAN7017**
CLASSE E (W124)								
E 200 D (124.120)	OM 601.912	55	07/1993 → 06/1995		70	12	063534893260	**MAN2017**
E 250 Turbo-D (124.128)	OM 602.962	93	07/1993 → 06/1995		70	12	063534893260	**MAN2017**
E 300 4-matic (124.230)	M 103.985	132	06/1993 → 06/1995		70	12	063534893260	**MAN2017**
E 300 Turbo-D (124.133)	OM 603.960	108	07/1993 → 06/1995		70	12	063534893260	**MAN2017**
E 300 Turbo-D 4-matic (124.333)	OM 603.963	108	06/1993 → 06/1995		70	12	063534893260	**MAN2017**
CLASSE E (W211)								
E 200 CDI (211.004)	OM 646.951	90	07/2002 → 03/2006		200	12	063536250020	**MAN2044**
E 200 CDI (211.004)	OM 646.951	75	07/2002 → 09/2008		200	12	063536250020	**MAN2044**
E 220 CDI (211.006)	OM 646.961	110	03/2002 → 03/2006		200	12	063536250020	**MAN2044**
E 220 CDI (211.006)	OM 646.961	100	03/2002 → 01/2009		200	12	063536250020	**MAN2044**
E 270 CDI (211.016)	OM 647.961	130	03/2002 → 03/2005		200	12	063536250020	**MAN2044**
CLASSE E Station wagon (S124)								
E 250 Turbo D	OM 602.962	93	07/1993 → 06/1995		70	12	063534893260	**MAN2017**
E 300 T 4-matic (124.290)	M 103.985	132	06/1993 → 06/1996		70	12	063534893260	**MAN2017**
E 300 T Turbo-D (124.193)	OM 603.960	108	07/1993 → 05/1996		70	12	063534893260	**MAN2017**
E 300 T Turbo-D 4-matic (124.393)	OM 603.963	108	07/1993 → 05/1996		70	12	063534893260	**MAN2017**
CLASSE E Station wagon (S210)								
E 230 T (210.237)	M 111.970	110	06/1996 → 06/1997		55	12	063321044010	**MAN286**
CLASSE E T-Model (S211)								
E 220 CDI (211.206)	OM 646.961	100	03/2003 → 08/2009		200	12	063536250020	**MAN2044**
E 220 T CDI (211.206)	OM 646.961	110	03/2003 → 03/2006		200	12	063536250020	**MAN2044**
E 270 T CDI (211.216)	OM 647.961	130	03/2003 → 03/2005		200	12	063536250020	**MAN2044**
COUPE (C124)								
230 CE (124.043)	M 102.982	100	03/1987 → 08/1992		70	12	063534893260	**MAN2017**
230 CE (124.043)	M 102.982	97	03/1987 → 08/1992		70	12	063534893260	**MAN2017**
230 CE (124.043) Cat.	M 102.982	97	06/1989 → 08/1992		70	12	063534893260	**MAN2017**
300 CE	M 103.983	138	03/1987 → 12/1989		70	12	063534893260	**MAN2017**
300 CE (124.050)	M 103.983	132	03/1987 → 05/1993		70	12	063534893260	**MAN2017**
KOMBI Station wagon (S124)								
200 T (124.080)	M 102.922	77	01/1986 → 05/1990		70	12	063534893260	**MAN2017**
200 T (124.080)	M 102.922	80	09/1985 → 08/1989		70	12	063534893260	**MAN2017**
200 T D (124.180)	OM 601.912	55	09/1988 → 08/1991		70	12	063534893260	**MAN2017**
200 T D (124.180)	OM 601.912	53	09/1985 → 08/1991		70	12	063534893260	**MAN2017**
200 TE	M 102.962	90	09/1988 → 12/1989		70	12	063534893260	**MAN2017**
200 TE (124.081)	M 102.963	87	09/1988 → 08/1992		70	12	063534893260	**MAN2017**
230 TE (124.083)	M 102.982	100	09/1985 → 08/1992		70	12	063534893260	**MAN2017**

		kW		i	A	V	MAGNETI MARELLI LONG	MAGNETI MARELLI SHORT
MERCEDES-BENZ								
KOMBI Station wagon (S124)								
230 TE (124.083)	M 102.982	97	09/1985 → 08/1992		70	12	063534893260	**MAN2017**
230 TE (124.083) Cat.	M 102.982	97	06/1989 → 08/1992		70	12	063534893260	**MAN2017**
250 T D (124.185)	OM 602.912	66	09/1985 → 06/1993		70	12	063534893260	**MAN2017**
250 T D (124.185)	OM 602.912	69	01/1989 → 06/1993		70	12	063534893260	**MAN2017**
260 TE FGST.	M 103.940	122	09/1985 → 12/1989		70	12	063534893260	**MAN2017**
260 TE FGST.	M 103.940	118	09/1989 → 08/1992		70	12	063534893260	**MAN2017**
300 T D (124.190)	OM 603.912	81	09/1989 → 06/1993		70	12	063534893260	**MAN2017**
300 T D (124.190)	OM 603.912	80	09/1986 → 08/1989		70	12	063534893260	**MAN2017**
300 T D (124.190)	OM 603.912	83	09/1989 → 06/1993		70	12	063534893260	**MAN2017**
300 T Turbo-D	OM 603.960, OM 603.963	105	09/1986 → 01/1989		70	12	063534893260	**MAN2017**
300 T Turbo-D (124.193)	OM 603.960	108	01/1989 → 06/1993		70	12	063534893260	**MAN2017**
300 T Turbo-D 4-matic (124.393)	OM 603.963	105	09/1986 → 01/1989		70	12	063534893260	**MAN2017**
300 T Turbo-D 4-matic (124.393)	OM 603.960	108	09/1989 → 06/1993		70	12	063534893260	**MAN2017**
300 TE (124.090)	M 103.983	138	01/1986 → 12/1989		70	12	063534893260	**MAN2017**
300 TE (124.090)	M 103.983	132	01/1986 → 08/1992		70	12	063534893260	**MAN2017**
300 TE 4-matic (124.290)	M 103.983	138	09/1986 → 12/1989		70	12	063534893260	**MAN2017**
300 TE 4-matic (124.290)	M 103.985	132	09/1986 → 06/1993		70	12	063534893260	**MAN2017**
SL (R107)								
300 SL (107.041)	M 103.982	138	09/1985 → 08/1989		70	12	063534893260	**MAN2017**
300 SL (107.041)	M 103.982	132	09/1985 → 08/1989		70	12	063534893260	**MAN2017**
T2/L Cassone / Furgonato / Promiscuo								
L 508 DG (309.411, 309.412, 309.413, 309.414, 309.415, 309.4..)	OM 314.946, OM 314.948	60	11/1986 → 12/1988		55	24	063534699820	**MAN2011**
L 508 DG (309.411, 309.412, 309.413, 309.414, 309.415, 309.4..)	OM 314.946, OM 314.948	63	11/1986 → 12/1988		55	24	063534699820	**MAN2011**
L 608 D (310.311, 310.312, 310.313, 310.314, 310.315, 310.31..)	OM 314.948, OM 314.967	63	11/1986 → 12/1988		55	24	063534699820	**MAN2011**
L 613 D (310.510, 313.424, 313.427, 313.429)	OM 353.963, OM 353.966	96	11/1986 → 12/1988		55	24	063534699820	**MAN2011**
T2/L Pianale piatto/Telaio								
L 508 DG (309.400, 309.401, 309.402, 309.403, 309.404, 309.4..)	OM 314.946, OM 314.948	60	11/1986 → 12/1988		55	24	063534699820	**MAN2011**
L 508 DG (309.400, 309.401, 309.402, 309.403, 309.404, 309.4..)	OM 314.946, OM 314.948	63	11/1986 → 12/1988		55	24	063534699820	**MAN2011**
L 608 D (310.300, 310.301, 310.302, 310.303, 310.304, 310.30..)	OM 314.948, OM 314.967	63	11/1986 → 12/1988		55	24	063534699820	**MAN2011**
L 613 D (313.402, 313.404)	OM 353.963, OM 353.966	96	11/1986 → 12/1988		55	24	063534699820	**MAN2011**

		kW			A	V	LONG	SHORT
MERCEDES-BENZ								
T2/L Ribaltabile								
L 608 D (310.340, 310.341, 310.342, 310.344, 310.345, 310.44..)	OM 314.946, OM 314.948, OM 314.961, OM 314.963	63	11/1986 → 12/1988		55	24	063534699820	**MAN2011**
L 608 D (310.340, 310.341, 310.342, 310.344, 310.345, 310.44..)	OM 314.946, OM 314.948, OM 314.961, OM 314.963	63	11/1986 → 12/1988		55	24	063534699820	**MAN2011**
LKO 508 DG (309.440, 309.441, 309.442, 309.444, 309.445)	OM 314.946, OM 314.948, OM 314.959, OM 314.961, OM 314.962, OM 314.963	63	11/1986 → 06/1988		55	24	063534699820	**MAN2011**
LKO 508 DG (309.440, 309.441, 309.442, 309.444, 309.445)	OM 314.946, OM 314.948, OM 314.959, OM 314.961, OM 314.962, OM 314.963	63	11/1986 → 06/1988		55	24	063534699820	**MAN2011**
T2/LN1 Cabina con motore								
809 DT (670.199)		0	02/1992 →		55	24	063534699820	**MAN2011**
T2/LN1 Cassone / Furgonato / Promiscuo								
809 D (670.061, 670.062, 670.063)	OM 364.920, OM 364.921	63	02/1992 → 12/1994		55	24	063534699820	**MAN2011**
811 D (670.362, 670.363)	OM 354.901, OM 354.903, OM 364.958	77	02/1992 → 12/1994		55	24	063534699820	**MAN2011**
814 D (670.364, 670.365, 670.366)	OM 354.924	103	06/1994 → 12/1994		55	24	063534699820	**MAN2011**
814 D (670.364, 670.365, 670.366)	OM 364.981, OM 364.986	100	06/1994 → 12/1994		55	24	063534699820	**MAN2011**
814 DA 4x4 (670.464, 670.465)	OM 354.925	103	06/1994 → 12/1994		55	24	063534699820	**MAN2011**
814 DA 4x4 (670.464, 670.465)	OM 364.984, OM 364.987	100	06/1994 → 12/1994		55	24	063534699820	**MAN2011**
T2/LN1 Pianale piatto/Telaio								
814 D (670.312, 670.313)	OM 354.924	103	06/1994 → 12/1994		55	24	063534699820	**MAN2011**
814 D (670.312, 670.313)	OM 364.981, OM 364.986	100	06/1994 → 12/1994		55	24	063534699820	**MAN2011**
814 DA 4x4 (670.411, 670.412)	OM 354.925	103	06/1994 → 12/1994		55	24	063534699820	**MAN2011**
814 DA 4x4 (670.411, 670.412)	OM 364.984, OM 364.987	100	06/1994 → 12/1994		55	24	063534699820	**MAN2011**
T2/LN1 Ribaltabile								
809 DK (670.041, 670.042)	OM 364.920, OM 364.921	63	02/1992 → 12/1994		55	24	063534699820	**MAN2011**
811 DK (670.341, 670.342)	OM 354.901, OM 354.903, OM 364.958	77	02/1992 → 12/1994		55	24	063534699820	**MAN2011**
Tre volumi (W124)								
200	M 102.922	77	01/1986 → 05/1990		70	12	063534893260	**MAN2017**
200 (124.020)	M 102.922	80	12/1985 → 05/1990		70	12	063534893260	**MAN2017**
200 (124.020)	M 102.922	75	01/1986 → 05/1990		70	12	063534893260	**MAN2017**
200 D (124.120)	OM 601.912	53	12/1984 → 08/1989		70	12	063534893260	**MAN2017**
200 D (124.120)	OM 601.912	55	08/1989 → 06/1993		70	12	063534893260	**MAN2017**
200 E (124.021)	M 102.963	87	09/1988 → 08/1992		70	12	063534893260	**MAN2017**

		kW		i	A	V	MAGNETI MARELLI LONG	MAGNETI MARELLI SHORT
MERCEDES-BENZ								
Tre volumi (W124)								
200 E (124.021)	M 102.963	90	09/1988 → 12/1989		70	12	063534893260	**MAN2017**
230 E (124.023)	M 102.982	97	04/1985 → 03/1992		70	12	063534893260	**MAN2017**
230 E (124.023)	M 102.982	100	04/1985 → 06/1993		70	12	063534893260	**MAN2017**
230 E (124.023) Cat.	M 102.982	97	06/1989 → 06/1993		70	12	063534893260	**MAN2017**
250 D (124.125)	OM 602.912	66	04/1985 → 06/1993		70	12	063534893260	**MAN2017**
250 D (124.125)	OM 602.912	69	01/1989 → 06/1993		70	12	063534893260	**MAN2017**
250 Turbo-D (124.128)	OM 602.962	93	09/1988 → 06/1993		70	12	063534893260	**MAN2017**
260 E (124.026)	M 103.940	122	09/1985 → 12/1989		70	12	063534893260	**MAN2017**
260 E (124.026)	M 103.940	118	09/1985 → 08/1992		70	12	063534893260	**MAN2017**
260 E 4-matic (124.226)	M 103.943	118	09/1986 → 08/1992		70	12	063534893260	**MAN2017**
260 E 4-matic (124.226)	M 103.940	122	12/1986 → 12/1989		70	12	063534893260	**MAN2017**
300 D (124.130)	OM 603.912	83	08/1989 → 06/1993		70	12	063534893260	**MAN2017**
300 D (124.130)	OM 603.912	81	06/1990 → 06/1993		70	12	063534893260	**MAN2017**
300 D (124.130)	OM 603.912	80	01/1985 → 08/1989		70	12	063534893260	**MAN2017**
300 D 4-matic (124.330)	OM 603.913	80	09/1986 → 08/1992		70	12	063534893260	**MAN2017**
300 D 4-matic (124.330)	OM 603.913	83	08/1989 → 06/1993		70	12	063534893260	**MAN2017**
300 E	M 103.980	138	01/1985 → 12/1985		70	12	063534893260	**MAN2017**
300 E	M 103.983	138	06/1985 → 08/1992		70	12	063534893260	**MAN2017**
300 E (124.030)	M 103.983	132	08/1985 → 08/1992		70	12	063534893260	**MAN2017**
300 E 4-matic	M 103.983	138	09/1986 → 02/1992		70	12	063534893260	**MAN2017**
300 E 4-matic (124.230)	M 103.985	132	09/1986 → 06/1993		70	12	063534893260	**MAN2017**
300 Turbo-D (124.133)	OM 603.960	108	09/1988 → 06/1993		70	12	063534893260	**MAN2017**
300 Turbo-D (124.133)	OM 603.960, OM 603.963	105	09/1986 → 09/1988		70	12	063534893260	**MAN2017**
300 Turbo-D 4-matic (124.333)	OM 603.960, OM 603.963	105	09/1986 → 09/1988		70	12	063534893260	**MAN2017**
300 Turbo-D 4-matic (124.333)	OM 603.963	108	09/1988 → 06/1993		70	12	063534893260	**MAN2017**
MG								
MAESTRO								
2.0 EFi		86	10/1984 → 09/1990		55	12	063324157010	**MAN102**
2.0 Turbo		112	10/1988 → 09/1990		55	12	063324157010	**MAN102**
METRO								
1300		54	01/1983 → 09/1990		55	12	063324157010	**MAN102**
Turbo		69	01/1983 → 09/1990		55	12	063324157010	**MAN102**
MINI								
MINI-MOKE								
1.0		29	09/1988 → 12/1992		45	12	063324199010	**MAN107**
MITSUBISHI								
COLT III (C5_A)								
1.6 GTi 16V (C53A)	4G61	91	04/1988 → 05/1990		75	12	063532615010	**MAN2615**
1.6 GTi 16V (C53A)	4G61	91	04/1988 → 05/1990		90	12	063532623010	**MAN2623**
1.8 GTi 16V (C58A) Cat.	4G67	100	06/1990 → 05/1992		75	12	063532615010	**MAN2615**
1.8 GTi 16V (C58A) Cat.	4G67	100	06/1990 → 05/1992		90	12	063532623010	**MAN2623**

		kW			A	V	LONG	SHORT
MITSUBISHI								
GALANT IV (E3_A)								
2.0 (E39A, E38A, E33A)	4G63 (SOHC 8V)	80	04/1989 → 10/1992		75	12	063532615010	**MAN2615**
2.0 (E39A, E38A, E33A)	4G63 (SOHC 8V)	80	04/1989 → 10/1992		90	12	063532623010	**MAN2623**
2.0 4x4 (E33A, E38A, E39A)	4G63 (SOHC 8V)	80	04/1989 → 10/1992		75	12	063532615010	**MAN2615**
2.0 4x4 (E33A, E38A, E39A)	4G63 (SOHC 8V)	80	04/1989 → 10/1992		90	12	063532623010	**MAN2623**
2.0 GTI 16V (E39A, E38A, E33A)	4 G 63 (DOHC 16V)	106	11/1988 → 10/1992		75	12	063532615010	**MAN2615**
2.0 GTI 16V (E39A, E38A, E33A)	4 G 63 (DOHC 16V)	107	11/1988 → 10/1992		75	12	063532615010	**MAN2615**
2.0 GTI 16V (E39A, E38A, E33A)	4 G 63 (DOHC 16V)	107	11/1988 → 10/1992		90	12	063532623010	**MAN2623**
2.0 GTI 16V (E39A, E38A, E33A)	4 G 63 (DOHC 16V)	106	11/1988 → 10/1992		90	12	063532623010	**MAN2623**
2.0 GTI 16V 4x4 (E38A, E39A, E33A)	4 G 63 (DOHC 16V)	106	07/1989 → 12/1992		75	12	063532615010	**MAN2615**
2.0 GTI 16V 4x4 (E38A, E39A, E33A)	4 G 63 (DOHC 16V)	106	07/1989 → 12/1992		90	12	063532623010	**MAN2623**
GALANT IV Tre volumi (E3_A)								
2.0 (E39A, E38A, E33A)	4G63 (SOHC 8V)	80	11/1987 → 10/1992		75	12	063532615010	**MAN2615**
2.0 (E39A, E38A, E33A)	4G63 (SOHC 8V)	80	11/1987 → 10/1992		90	12	063532623010	**MAN2623**
2.0 4x4 (E39A, E38A, E33A)	4G63 (SOHC 8V)	80	12/1988 → 10/1992		75	12	063532615010	**MAN2615**
2.0 4x4 (E39A, E38A, E33A)	4G63 (SOHC 8V)	80	12/1988 → 10/1992		90	12	063532623010	**MAN2623**
2.0 GTi 16V (E39A, E38A, E33A)	4 G 63 (DOHC 16V)	106	11/1987 → 10/1992		75	12	063532615010	**MAN2615**
2.0 GTi 16V (E39A, E38A, E33A)	4 G 63 (DOHC 16V)	107	11/1988 → 10/1992		75	12	063532615010	**MAN2615**
2.0 GTi 16V (E39A, E38A, E33A)	4 G 63 (DOHC 16V)	107	11/1988 → 10/1992		90	12	063532623010	**MAN2623**
2.0 GTi 16V (E39A, E38A, E33A)	4 G 63 (DOHC 16V)	106	11/1987 → 10/1992		90	12	063532623010	**MAN2623**
2.0 GTI 16V 4x4 (E38A, E39A, E33A) Cat.	4 G 63 (DOHC 16V)	110	09/1991 → 10/1992		75	12	063532615010	**MAN2615**
2.0 GTI 16V 4x4 (E38A, E39A, E33A) Cat.	4 G 63 (DOHC 16V)	110	09/1991 → 10/1992		90	12	063532623010	**MAN2623**
2.0 GTi 16V 4x4 (E39A, E38A, E33A)	4 G 63 (DOHC 16V)	106	06/1988 → 10/1992		75	12	063532615010	**MAN2615**
2.0 GTi 16V 4x4 (E39A, E38A, E33A)	4 G 63 (DOHC 16V)	106	06/1988 → 10/1992		90	12	063532623010	**MAN2623**
GALANT V (E5_A, E7_A, E8_A)								
2.0 GLSI 4x4 (E55A, E75A)	4G63 (SOHC 8V)	101	11/1992 → 08/1996		90	12	063532623010	**MAN2623**
GALANT V Tre volumi (E5_A, E7_A, E8_A)								
2.0 GLSI 4x4 (E55A, E75A)	4G63 (SOHC 8V)	101	11/1992 → 08/1996		90	12	063532623010	**MAN2623**
GALLOPER (JK-01)								
2.5 TD intercooler	D4BH	73	02/1999 →		90	12	063532606010	**MAN2606**
L 300 Autobus (P0_W, P1_W, P2_W)								
2.5 D (P25V, P05W, P05V, P15V, P15T)	4 D 56	51	11/1986 →		110	12	063532608010	**MAN2608**
2.5 TD 4WD (P25W, P25V)	4 D 56 T	64	11/1988 →		110	12	063532608010	**MAN2608**

		kW			A	V	LONG	SHORT
MITSUBISHI								
L 300 Furgonato (P0_W, P1_W)								
2.5 D (P05V, P05W, P15V)	4 D 56	51	11/1986 →		110	12	063532608010	**MAN2608**
L 300 Pianale piatto/Telaio (P1_T)								
2.5 D (P15T)	4 D 56 T	64	11/1994 →		110	12	063532608010	**MAN2608**
L 400 Autobus (PAOV)								
2500 TD	4 D 56 T	64	06/1996 →		110	12	063532608010	MAN2608
L 400 Furgonato (PAOV)								
2500 TD (PD5W, PD5V, PA5W, PA5V)	4 D 56 T	64	09/1996 →		110	12	063532608010	**MAN2608**
2500 TD 4x4 (PD5W, PD5V, PA5W, PA5V)	4 D 56 T	64	09/1996 →		110	12	063532608010	**MAN2608**
LANCER IV (C6_A, C7_A)								
1.6 GTi (C63A)	4G61	91	05/1988 → 05/1990		90	12	063532623010	**MAN2623**
1.8 GTi 16V (C68A)	4G67	100	11/1989 → 05/1992		75	12	063532615010	**MAN2615**
1.8 GTi 16V (C68A)	4G67	100	11/1989 → 05/1992		90	12	063532623010	**MAN2623**
LANCER IV Tre volumi (C6_A)								
1.6 GTi	4G61	91	05/1988 → 05/1990		90	12	063532623010	**MAN2623**
SANTAMO								
2.0 16V	4 G 63 (DOHC 16V)	102	05/1999 →		75	12	063532615010	**MAN2615**
2.0 16V	4 G 63 (DOHC 16V)	102	05/1999 →		90	12	063532623010	**MAN2623**
2.0 16V 4x4	4 G 63 (DOHC 16V)	102	05/1999 →		75	12	063532615010	**MAN2615**
2.0 16V 4x4	4 G 63 (DOHC 16V)	102	05/1999 →		90	12	063532623010	**MAN2623**
SPACE GEAR (PA/B/D_V/W)								
2.5 TD (PA5V/W, PB5V)	4 D 56 TD	73	05/1995 → 05/2000		110	12	063532608010	**MAN2608**
2.5 TD 4x4 (PD5V/W)	4 D 56 TD	73	05/1995 → 05/2000		110	12	063532608010	**MAN2608**
TRADE Furgonato								
2.0 D	LD20	49	04/1993 → 10/1998		55	12	063531446220	**MAN2033**
2.0 D	LD20	44	11/1986 → 03/1993		55	12	063531446220	**MAN2033**
TRADE Pianale piatto/Telaio								
2.0 D	LD20	44	11/1986 → 03/1993		55	12	063531446220	**MAN2033**
2.8 D	A428II	59	06/1989 → 06/1994		55	12	063531446220	**MAN2033**
3.0	BD30II	63	01/1994 → 12/1998		55	12	063531446220	**MAN2033**
3.0	BD-30Ti	78	01/1996 → 12/1998		55	12	063531446220	**MAN2033**
OPEL								
AGILA								
1.3 CDTI	Z 13 DTJ	55	05/2008 →		70	12	063377423010	**MAN7423**
1.3 CDTI	Z 13 DTJ	55	05/2008 →		120	12	063377425010	**MAN7425**
1.3 CDTI	Z 13 DTJ	55	09/2007 →		105	12	063377494010	**MAN7494**
AGILA (H00)								
1.0	Z 10 XEP	44	08/2003 → 02/2008		90	12	063358061010	**MAN1097**
1.0	Z 10 XEP	44	08/2003 → 02/2008		70	12	063532250220	**MAN2036**
1.0 12V	Z 10 XE	43	09/2000 → 08/2003		90	12	063358061010	**MAN1097**
1.0 12V	Z 10 XE	43	09/2000 → 08/2003		70	12	063532250220	**MAN2036**
1.2 16V	Z 12 XE	55	09/2000 → 06/2004		90	12	063358061010	**MAN1097**
1.2 16V	Z 12 XE	55	09/2000 → 06/2004		70	12	063532250220	**MAN2036**
1.2 16V Twinport	Z 12 XEP	59	07/2004 → 02/2008		90	12	063358061010	**MAN1097**

		kW			A	V	LONG	SHORT
OPEL								
AGILA (H00)								
1.2 16V Twinport	Z 12 XEP	59	07/2004 →		70	12	063377496010	**MAN7496**
1.2 16V Twinport	Z 12 XEP	59	07/2004 → 02/2008		70	12	063532250220	**MAN2036**
1.3 CDTI	Z 13 DT	51	08/2003 → 02/2008		90	12	063358061010	**MAN1097**
1.3 CDTI	Z 13 DT	51	08/2003 →		70	12	063377423010	**MAN7423**
1.3 CDTI	Z 13 DT	51	08/2003 →		120	12	063377425010	**MAN7425**
1.3 CDTI	Z 13 DT	51	08/2003 →		120	12	063377490010	**MAN7490**
1.3 CDTI	Z 13 DT	51	08/2003 →		105	12	063377494010	**MAN7494**
ASTRA F (56_, 57_)								
1.4	14 NV	55	09/1991 → 09/1993		100	12	063533479010	**MAN2801**
1.4	14 NV	55	09/1991 → 09/1993		55	12	063534881590	**MAN2012**
1.4	14 SE	60	09/1992 → 09/1998		100	12	063533479010	**MAN2801**
1.4 i	C 14 NZ, X 14 NZ	44	09/1991 → 09/1998		100	12	063533479010	**MAN2801**
1.4 i	C 14 NZ, X 14 NZ	44	09/1991 → 02/1998		55	12	063534881590	**MAN2012**
1.4 i 16V	X 14 XE	66	02/1996 → 09/1998		100	12	063533479010	**MAN2801**
1.4 Si	C 14 SE	60	03/1992 → 09/1998		100	12	063533479010	**MAN2801**
1.6	16 LZ2, 16 NZR	55	09/1995 → 09/1998		100	12	063533479010	**MAN2801**
1.6 i	C 16 NZ, X 16 SZR	55	03/1992 → 08/1994		100	12	063533479010	**MAN2801**
1.6 i	X 16 SZ	52	05/1993 → 07/1996		100	12	063533479010	**MAN2801**
1.6 i	X 16 SZR	55	08/1996 → 09/1998		100	12	063533479010	**MAN2801**
1.6 i 16V	X 16 XEL	74	08/1994 → 09/1998		100	12	063533479010	**MAN2801**
1.6 Si	C 16 SE	74	05/1992 → 12/1994		100	12	063533479010	**MAN2801**
1.8 i	C 18 NZ	66	03/1992 → 09/1998		100	12	063533479010	**MAN2801**
1.8 i 16V	C 18 XE	92	06/1993 → 10/1994		100	12	063533479010	**MAN2801**
1.8 i 16V	C 18 XEL, X 18 XE	85	11/1994 → 09/1998		100	12	063533479010	**MAN2801**
2.0 i	C 20 NE	85	03/1992 → 09/1998		100	12	063533479010	**MAN2801**
2.0 i 16V	X 20 XEV	100	02/1995 → 09/1998		100	12	063533479010	**MAN2801**
ASTRA F 2 volumi /Coda spiovente (53_, 54_, 58_, 59_)								
1.4	14 NV	55	09/1991 → 09/1993		100	12	063533479010	**MAN2801**
1.4	14 NV	55	09/1991 → 09/1993		55	12	063534881590	**MAN2012**
1.4	14 SE	60	09/1992 → 01/1998		100	12	063533479010	**MAN2801**
1.4 i	C 14 NZ	44	03/1992 → 01/1998		100	12	063533479010	**MAN2801**
1.4 i	C 14 NZ	44	03/1992 → 01/1998		55	12	063534881590	**MAN2012**
1.4 i 16V	X 14 XE	66	01/1996 → 01/1998		100	12	063533479010	**MAN2801**
1.4 Si	C 14 SE	60	03/1992 → 01/1998		100	12	063533479010	**MAN2801**
1.6	16 LZ2, 16 NZR	55	09/1995 → 01/1998		100	12	063533479010	**MAN2801**
1.6 i	C 16 NZ, X 16 SZR	55	09/1991 → 01/1998		100	12	063533479010	**MAN2801**
1.6 i	X 16 SZ	52	05/1993 → 07/1996		100	12	063533479010	**MAN2801**
1.6 i 16V	X 16 XEL	74	08/1994 → 01/1998		100	12	063533479010	**MAN2801**
1.6 Si	C 16 SE	74	03/1992 → 12/1994		100	12	063533479010	**MAN2801**
1.8 i	C 18 NZ	66	09/1991 → 01/1998		100	12	063533479010	**MAN2801**
1.8 i 16V	C 18 XE	92	06/1993 → 08/1994		100	12	063533479010	**MAN2801**
1.8 i 16V	C 18 XEL, X 18 XE	85	09/1994 → 01/1998		100	12	063533479010	**MAN2801**
2.0 GSI 16V	C 20 XE	110	09/1991 → 01/1998		100	12	063533479010	**MAN2801**

		kW		i	A	V	LONG	SHORT
OPEL								
ASTRA F 2 volumi /Coda spiovente (53_, 54_, 58_, 59_)								
2.0 i	C 20 NE	85	09/1991 → 01/1998		100	12	063533479010	**MAN2801**
2.0 i 16V	X 20 XEV	100	02/1995 → 01/1998		100	12	063533479010	**MAN2801**
ASTRA F Cabriolet (53_B)								
1.4 i 16V	X 14 XE	66	01/1996 → 03/2001		100	12	063533479010	**MAN2801**
1.4 Si	C 14 SE	60	05/1993 → 03/2001		100	12	063533479010	**MAN2801**
1.6 i	X 16 SZ	52	03/1993 → 08/1996		100	12	063533479010	**MAN2801**
1.6 i	X 16 SZR	55	01/1996 → 03/2001		100	12	063533479010	**MAN2801**
1.8 i 16V	C 18 XEL, X 18 XE	85	11/1994 → 08/1998		100	12	063533479010	**MAN2801**
2.0 i	C 20 NE	85	03/1993 → 10/1994		100	12	063533479010	**MAN2801**
ASTRA F Station wagon (51_, 52_)								
1.4	14 NV	55	09/1991 → 09/1993		100	12	063533479010	**MAN2801**
1.4	14 NV	55	09/1991 → 09/1993		55	12	063534881590	**MAN2012**
1.4	14 SE	60	09/1992 → 01/1998		100	12	063533479010	**MAN2801**
1.4 i	C 14 NZ	44	09/1991 → 01/1998		100	12	063533479010	**MAN2801**
1.4 i	C 14 NZ	44	09/1991 → 01/1998		55	12	063534881590	**MAN2012**
1.4 i 16V	X 14 XE	66	02/1996 → 01/1998		100	12	063533479010	**MAN2801**
1.4 Si	C 14 SE	60	03/1992 → 01/1998		100	12	063533479010	**MAN2801**
1.6	16 LZ2, 16 NZR	55	09/1995 → 01/1998		100	12	063533479010	**MAN2801**
1.6 i	C 16 NZ, X 16 SZR	55	09/1991 → 01/1998		100	12	063533479010	**MAN2801**
1.6 i	X 16 SZ	52	05/1993 → 07/1996		100	12	063533479010	**MAN2801**
1.6 i 16V	X 16 XEL	74	08/1994 → 01/1998		100	12	063533479010	**MAN2801**
1.6 Si	C 16 SE	74	03/1992 → 12/1994		100	12	063533479010	**MAN2801**
1.8 i	C 18 NZ	66	09/1991 → 01/1998		100	12	063533479010	**MAN2801**
1.8 i 16V	C 18 XE	92	06/1993 → 01/1998		100	12	063533479010	**MAN2801**
1.8 i 16V	C 18 XEL, X 18 XE	85	07/1994 → 01/1998		100	12	063533479010	**MAN2801**
2.0 i	C 20 NE	85	09/1991 → 07/1994		100	12	063533479010	**MAN2801**
2.0 i 16V	C 20 XE	110	03/1993 → 01/1998		100	12	063533479010	**MAN2801**
2.0 i 16V	X 20 XEV	100	02/1995 → 01/1998		100	12	063533479010	**MAN2801**
ASTRA F Van (55_)								
1.4 i	C 14 NZ	44	10/1991 → 02/1998		100	12	063533479010	**MAN2801**
1.4 i	C 14 NZ	44	10/1991 → 02/1998		55	12	063534881590	**MAN2012**
1.6 i	C 16 NZ	55	10/1991 → 04/1993		100	12	063533479010	**MAN2801**
1.6 i	X 16 SZ	52	02/1993 → 07/1996		100	12	063533479010	**MAN2801**
ASTRA G 2 volumi /Coda spiovente (F48_, F08_)								
1.2 16V	X 12 XE	48	02/1998 → 09/2000		70	12	063532250220	**MAN2036**
1.2 16V	X 12 XE	48	02/1998 → 09/2000		100	12	063534150230	**MAN2043**
1.2 16V	Z 12 XE	55	09/2000 → 09/2003		70	12	063532250220	**MAN2036**
1.2 16V	Z 12 XE	55	09/2000 → 09/2003		100	12	063534150230	**MAN2043**
ASTRA G Station wagon (F35_)								
1.2 16V	X 12 XE	48	02/1998 → 09/2000		70	12	063532250220	**MAN2036**
1.2 16V	X 12 XE	48	02/1998 → 09/2000		100	12	063534150230	**MAN2043**
1.2 16V	Z 12 XE	55	09/2000 → 09/2003		70	12	063532250220	**MAN2036**
1.2 16V	Z 12 XE	55	09/2000 → 09/2003		100	12	063534150230	**MAN2043**

		kW		i	A	V	LONG	SHORT
OPEL								
ASTRA G Tre volumi (F69_)								
1.2 16V	X 12 XE	48	09/1998 → 09/2000		70	12	063532250220	**MAN2036**
1.2 16V	X 12 XE	48	09/1998 → 09/2000		100	12	063534150230	**MAN2043**
1.2 16V	Z 12 XE	55	09/2000 → 09/2003		70	12	063532250220	**MAN2036**
1.2 16V	Z 12 XE	55	09/2000 → 09/2003		100	12	063534150230	**MAN2043**
ASTRA H								
1.2	Z 12 XEP	59	08/2005 →		90	12	063358061010	**MAN1097**
1.3 CDTI	Z 13 DTH	66	08/2005 →		90	12	063358061010	**MAN1097**
1.3 CDTI	Z 13 DTH	66	08/2005 →		105	12	063377424010	**MAN7424**
1.3 CDTI	Z 13 DTH	66	08/2005 →		70	12	063377493010	**MAN7493**
1.3 CDTI	Z 13 DTH	66	08/2005 →		105	12	063377494010	**MAN7494**
1.3 CDTI	Z 13 DTH	66	08/2005 →		120	12	063377495010	**MAN7495**
1.4	Z 14 XEL	55	04/2004 → 10/2004		90	12	063358061010	**MAN1097**
1.4	Z 14 XEP	66	03/2004 →		90	12	063358061010	**MAN1097**
1.4 LPG	Z 14 XEP	66	08/2009 →		90	12	063358061010	**MAN1097**
1.9 CDTI	Z 19 DT	88	11/2006 →		120	12	063377490010	**MAN7490**
1.9 CDTI	Z 19 DT	88	09/2005 →		130	12	063377491010	**MAN7491**
1.9 CDTI	Z 19 DT	88	09/2005 →		105	12	063377492010	**MAN7492**
1.9 CDTI 16V	Z 19 DTJ	88	11/2006 →		120	12	063377490010	**MAN7490**
1.9 CDTI 16V	Z 19 DTJ	88	09/2005 →		130	12	063377491010	**MAN7491**
1.9 CDTI 16V	Z 19 DTJ	88	09/2005 →		105	12	063377492010	**MAN7492**
ASTRA H GTC								
1.2	Z 12 XEP	59	08/2005 →		90	12	063358061010	**MAN1097**
1.3 CDTI	Z 13 DTH	66	04/2005 →		90	12	063358061010	**MAN1097**
1.3 CDTI	Z 13 DTH	66	08/2005 →		105	12	063377424010	**MAN7424**
1.3 CDTI	Z 13 DTH	66	04/2005 →		70	12	063377493010	**MAN7493**
1.3 CDTI	Z 13 DTH	66	04/2005 →		105	12	063377494010	**MAN7494**
1.3 CDTI	Z 13 DTH	66	04/2005 →		120	12	063377495010	**MAN7495**
1.4	Z 14 XEL	55	03/2005 →		90	12	063358061010	**MAN1097**
1.4	Z 14 XEP	66	03/2005 →		90	12	063358061010	**MAN1097**
1.9 CDTI	Z 19 DT	88	11/2006 →		120	12	063377490010	**MAN7490**
1.9 CDTI	Z 19 DT	88	09/2005 →		130	12	063377491010	**MAN7491**
1.9 CDTI	Z 19 DT	88	09/2005 →		105	12	063377492010	**MAN7492**
ASTRA H Station wagon								
1.3 CDTI	Z 13 DTH	66	08/2005 →		90	12	063358061010	**MAN1097**
1.3 CDTI	Z 13 DTH	66	08/2005 →		105	12	063377424010	**MAN7424**
1.3 CDTI	Z 13 DTH	66	08/2005 →		70	12	063377493010	**MAN7493**
1.3 CDTI	Z 13 DTH	66	08/2005 →		105	12	063377494010	**MAN7494**
1.3 CDTI	Z 13 DTH	66	08/2005 →		120	12	063377495010	**MAN7495**
1.4	Z 14 XEL	55	08/2004 →		90	12	063358061010	**MAN1097**
1.4	Z 14 XEP	66	08/2004 →		90	12	063358061010	**MAN1097**
1.4 LPG	Z 14 XEP	66	08/2009 →		90	12	063358061010	**MAN1097**

		kW			A	V	LONG	SHORT
OPEL								
ASTRA H Station wagon								
1.9 CDTI	Z 19 DT	88	11/2006 →		120	12	063377490010	**MAN7490**
1.9 CDTI	Z 19 DT	88	09/2005 →		130	12	063377491010	**MAN7491**
1.9 CDTI	Z 19 DT	88	09/2005 →		105	12	063377492010	**MAN7492**
1.9 CDTI 16V	Z 19 DTJ	88	11/2006 →		120	12	063377490010	**MAN7490**
1.9 CDTI 16V	Z 19 DTJ	88	09/2005 →		130	12	063377491010	**MAN7491**
1.9 CDTI 16V	Z 19 DTJ	88	09/2005 →		105	12	063377492010	**MAN7492**
ASTRA H Tre volumi								
1.3 CDTi	Z 13 DTH	66	02/2007 →		90	12	063358061010	**MAN1097**
1.3 CDTi	Z 13 DTH	66	02/2007 →		70	12	063377493010	**MAN7493**
1.3 CDTi	Z 13 DTH	66	02/2007 →		105	12	063377494010	**MAN7494**
1.3 CDTi	Z 13 DTH	66	02/2007 →		120	12	063377495010	**MAN7495**
1.6	Z 16 XER	85	02/2007 →		130	12	063377491010	**MAN7491**
ASTRA H TwinTop								
1.6	Z 16 XE1, Z 16 XEP	77	10/2005 →		130	12	063377491010	**MAN7491**
1.6 Turbo	Z 16 LET	132	02/2007 →		130	12	063377491010	**MAN7491**
1.9 CDTi	Z 19 DTH	110	12/2005 →		130	12	063377491010	**MAN7491**
ASTRA H Van								
1.3 CDTI	Z 13 DTH	66	08/2005 →		90	12	063358061010	**MAN1097**
CALIBRA A (85_)								
2.0 i	C 20 NE	85	06/1990 → 07/1997		100	12	063533479010	**MAN2801**
2.0 i 16V	C 20 XE	110	06/1990 → 02/1994		100	12	063533479010	**MAN2801**
2.0 i 16V	X 20 XEV	100	02/1994 → 08/1996		100	12	063533479010	**MAN2801**
2.0 i 16V 4x4	C 20 XE	110	06/1990 → 02/1994		100	12	063533479010	**MAN2801**
2.0 i 16V 4x4	X 20 XEV	100	02/1994 → 08/1996		100	12	063533479010	**MAN2801**
2.0 i 4x4	C 20 NE	85	06/1990 → 07/1997		100	12	063533479010	**MAN2801**
2.0 i Turbo 4x4	C 20 LET	150	03/1992 → 07/1997		100	12	063533479010	**MAN2801**
COMBO (71_)								
1.2	C 12 NZ, X 12 SZ	33	09/1994 → 10/2001		55	12	063534881590	**MAN2012**
1.4	C 14 NZ, X 14 SZ	44	07/1994 → 10/2001		100	12	063533479010	**MAN2801**
1.4	C 14 NZ, X 14 SZ	44	09/1994 → 10/2001	❄	55	12	063534881590	**MAN2012**
1.4	C 14 SE	60	07/1994 → 10/2001		100	12	063533479010	**MAN2801**
1.4 16V	X 14 XE	66	08/1999 → 10/2001		100	12	063533479010	**MAN2801**
COMBO Cassone / Furgonato / Promiscuo								
1.3 CDTI 16V	Z 13 DT	51	08/2005 →		90	12	063358061010	**MAN1097**
1.3 CDTI 16V	Z 13 DT	51	08/2005 →		120	12	063377490010	**MAN7490**
1.3 CDTI 16V	Z 13 DTJ	55	10/2005 →		90	12	063358061010	**MAN1097**
1.3 CDTI 16V	Z 13 DTJ	55	10/2005 →		120	12	063377490010	**MAN7490**
COMBO Tour								
1.3 CDTI 16V	Y 13 DT, Z 13 DT	51	10/2004 →		90	12	063358061010	**MAN1097**
1.3 CDTI 16V	Y 13 DT, Z 13 DT	51	10/2004 →		120	12	063377490010	**MAN7490**
1.3 CDTI 16V	Z 13 DTJ	55	10/2005 →		90	12	063358061010	**MAN1097**
1.3 CDTI 16V	Z 13 DTJ	55	11/2005 →		120	12	063377490010	**MAN7490**
CORSA A 2 volumi /Coda spiovente (93_, 94_, 98_, 99_)								
1.2 i	C 12 NZ	33	09/1989 → 03/1993		55	12	063534881590	**MAN2012**

		kW			A	V	LONG	SHORT
OPEL								
CORSA A 2 volumi /Coda spiovente (93_, 94_, 98_, 99_)								
1.3	13 NB	44	03/1986 → 10/1989		55	12	063534881590	**MAN2012**
1.3 i	C 13 N	44	09/1986 → 09/1990		55	12	063534881590	**MAN2012**
1.4 i	C 14 NZ	44	01/1990 → 03/1993		55	12	063534881590	**MAN2012**
1.4 i	C 14 NZ	40	01/1990 → 03/1993		55	12	063534881590	**MAN2012**
1.4 S	14 NV	53	01/1990 → 03/1993		55	12	063534881590	**MAN2012**
1.6 GSI	C 16 NZ	55	04/1989 → 09/1992		55	12	063534881590	**MAN2012**
1.6 GSI	E 16 SE	74	05/1988 → 03/1992		55	12	063534881590	**MAN2012**
1.6 GSI Cat.	C 16 SE	74	02/1992 → 03/1993		55	12	063534881590	**MAN2012**
CORSA A Furgonato								
1.2	12 S	44	09/1986 → 07/1990		55	12	063534881590	**MAN2012**
1.3	13 NB	44	03/1986 → 04/1989		55	12	063534881590	**MAN2012**
CORSA A TR (91_, 92_, 96_, 97_)								
1.2 i	C 12 NZ	33	09/1990 → 03/1993		55	12	063534881590	**MAN2012**
1.3	13 NB, C 13 N	44	03/1986 → 10/1987		55	12	063534881590	**MAN2012**
1.4 i	C 14 NZ	44	01/1990 → 03/1993		55	12	063534881590	**MAN2012**
1.4 S	14 NV	53	01/1990 → 03/1993		55	12	063534881590	**MAN2012**
CORSA B (73_, 78_, 79_)								
1.2 i	12 NZ	33	03/1993 → 08/2000		55	12	063534881590	**MAN2012**
1.2 i	C 12 NZ, X 12 SZ	33	03/1993 → 08/2000		55	12	063534881590	**MAN2012**
1.4 i	C 14 NZ, X 14 SZ	44	09/1994 → 09/2000		100	12	063533479010	**MAN2801**
1.4 i	C 14 NZ, X 14 SZ	44	03/1993 → 08/2000	⊛	55	12	063534881590	**MAN2012**
1.4 i 16V	C 14 SEL	63	03/1998 → 09/2000		100	12	063533479010	**MAN2801**
1.4 i 16V	X 14 XE	66	09/1994 → 08/1999		100	12	063533479010	**MAN2801**
1.4 Si	C 14 SE	60	09/1994 → 09/2000		100	12	063533479010	**MAN2801**
1.6 GSI 16V	C 16 XE	80	09/1994 → 09/2000		100	12	063533479010	**MAN2801**
1.6 i 16V	C 16 SEL	74	06/1998 → 09/2000		100	12	063533479010	**MAN2801**
1.6 i 16V	X 16 XE	78	09/1994 → 08/1999		100	12	063533479010	**MAN2801**
CORSA B Furgonato (73_)								
1.4 i	X 14 SZ	44	08/1999 → 09/2000		100	12	063533479010	**MAN2801**
CORSA C (F08, F68)								
1.0	Z 10 XE	43	09/2000 → 08/2003		70	12	063532250220	**MAN2036**
1.0	Z 10 XE	43	09/2000 → 08/2003		100	12	063534150230	**MAN2043**
1.2	Z 12 XE	55	09/2000 → 06/2004		70	12	063532250220	**MAN2036**
1.2	Z 12 XE	55	09/2000 → 06/2004		100	12	063534150230	**MAN2043**
1.3 CDTI	Z 13 DT	51	06/2003 →		90	12	063358061010	**MAN1097**
1.3 CDTI	Z 13 DT	51	07/2003 →		105	12	063377424010	**MAN7424**
1.3 CDTI	Z 13 DT	51	07/2003 →		120	12	063377425010	**MAN7425**
1.3 CDTI	Z 13 DT	51	06/2003 →		70	12	063377493010	**MAN7493**
1.3 CDTI	Z 13 DT	51	06/2003 →		105	12	063377494010	**MAN7494**
CORSA C Furgonato (F08, W5L)								
1.2 16V	Z 12 XE	55	09/2000 → 06/2004		70	12	063532250220	**MAN2036**
1.2 16V	Z 12 XE	55	09/2000 → 06/2004		100	12	063534150230	**MAN2043**
1.3 CDTI 16V	Z 13 DT	51	08/2005 →		90	12	063358061010	**MAN1097**

		kW		i	A	V	LONG	SHORT
OPEL								
CORSA C Furgonato (F08, W5L)								
1.3 CDTI 16V	Z 13 DT	51	08/2005 →		105	12	063377424010	**MAN7424**
1.3 CDTI 16V	Z 13 DT	51	08/2005 →		120	12	063377425010	**MAN7425**
1.3 CDTI 16V	Z 13 DT	51	08/2005 →		70	12	063377493010	**MAN7493**
1.3 CDTI 16V	Z 13 DT	51	08/2005 →		105	12	063377494010	**MAN7494**
CORSA D								
1.3 CDTI	A 13 DTC, Z 13 DTJ	55	08/2006 →		70	12	063377423010	**MAN7423**
1.3 CDTI	A 13 DTC, Z 13 DTJ	55	08/2006 →		105	12	063377424010	**MAN7424**
1.3 CDTI	A 13 DTC, Z 13 DTJ	55	08/2006 →		120	12	063377425010	**MAN7425**
1.3 CDTI	Z 13 DTH	66	08/2006 →		70	12	063377423010	**MAN7423**
1.3 CDTI	Z 13 DTH	66	08/2006 →		105	12	063377424010	**MAN7424**
1.3 CDTI	Z 13 DTH	66	08/2006 →		120	12	063377425010	**MAN7425**
1.3 CDTI	A 13 DTR, Z 13 DTE, Z 13 DTR	70	06/2010 →		70	12	063377423010	**MAN7423**
1.3 CDTI	A 13 DTR, Z 13 DTE, Z 13 DTR	70	06/2010 →		105	12	063377424010	**MAN7424**
1.3 CDTI	A 13 DTR, Z 13 DTE, Z 13 DTR	70	06/2010 →		120	12	063377425010	**MAN7425**
FRONTERA A (5_MWL4)								
2.2 i (54MWL4)	X 22 XE	100	03/1995 → 10/1998		100	12	063533479010	**MAN2801**
FRONTERA B (6B_)								
2.2 i (6B_ZC, 6B_VF, 6B_66, 6B_76)	X 22 SE, Y 22 SE	100	10/1998 →		100	12	063533479010	**MAN2801**
KADETT E (39_, 49_)								
1.3 i Cat.	C 13 N	44	09/1988 → 08/1991		55	12	063534881590	**MAN2012**
1.3 N	13 N, 13 NB	44	09/1988 → 08/1989		55	12	063534881590	**MAN2012**
1.4 i	C 14 NZ	44	01/1990 → 08/1991		55	12	063534881590	**MAN2012**
1.4 S	14 NV	55	01/1990 → 08/1991		55	12	063534881590	**MAN2012**
1.6 i	E 16 NZ	55	09/1987 → 08/1991		55	12	063534881590	**MAN2012**
1.6 i Cat.	C 16 LZ, C 16 NZ	55	09/1986 → 08/1991		55	12	063534881590	**MAN2012**
1.6 S	16 SH	66	09/1984 → 08/1986		55	12	063534881590	**MAN2012**
1.6 S	16 SV	60	09/1986 → 08/1991		55	12	063534881590	**MAN2012**
KADETT E 2 volumi /Coda spiovente (33_, 34_, 43_, 44_)								
1.3 i Cat.	C 13 N	44	09/1988 → 08/1991		55	12	063534881590	**MAN2012**
1.3 N	13 N, 13 NB	44	09/1988 → 08/1991		55	12	063534881590	**MAN2012**
1.4 i	C 14 NZ	44	01/1990 → 08/1991		55	12	063534881590	**MAN2012**
1.4 S	14 NV	55	01/1990 → 08/1991		55	12	063534881590	**MAN2012**
1.4 S	C 14 SE	60	01/1990 → 08/1991		55	12	063534881590	**MAN2012**
1.6 i	E 16 NZ	55	09/1987 → 08/1991		55	12	063534881590	**MAN2012**
1.6 i Cat.	C 16 LZ, C 16 NZ	55	09/1986 → 08/1991		55	12	063534881590	**MAN2012**
1.6 S	16 SH	66	09/1984 → 08/1986		55	12	063534881590	**MAN2012**
1.6 S	16 SV	60	09/1986 → 08/1991		55	12	063534881590	**MAN2012**
KADETT E Cabriolet (43B_)								
1.4 i	C 14 NZ	44	01/1990 → 08/1991		55	12	063534881590	**MAN2012**
1.4 S	14 NV	55	08/1990 → 08/1991		55	12	063534881590	**MAN2012**
1.6 i	16 SV	60	07/1989 → 08/1991		55	12	063534881590	**MAN2012**

		kW			A	V	LONG	SHORT
OPEL								
KADETT E Cabriolet (43B_)								
1.6 i	E 16 NZ	55	09/1987 → 02/1993		55	12	063534881590	**MAN2012**
1.6 i Cat.	C 16 LZ, C 16 NZ	55	10/1987 → 08/1991		55	12	063534881590	**MAN2012**
KADETT E Combo (38_, 48_)								
1.3 N	13 N	44	09/1988 → 12/1989		55	12	063534881590	**MAN2012**
1.4 i	C 14 NZ	44	08/1991 → 07/1994		55	12	063534881590	**MAN2012**
1.4 S	14 NV	55	01/1990 → 08/1991		55	12	063534881590	**MAN2012**
1.6	16 SV	60	09/1986 → 08/1991		55	12	063534881590	**MAN2012**
1.6 i	C 16 NZ	55	08/1991 → 07/1994		55	12	063534881590	**MAN2012**
KADETT E Furgonato (37_, 47_)								
1.3 N	13 N, 13 NB	44	09/1988 → 07/1989		55	12	063534881590	**MAN2012**
1.4 i	C 14 NZ	44	01/1990 → 08/1991		55	12	063534881590	**MAN2012**
1.6 i	C 16 NZ	55	08/1989 → 08/1993		55	12	063534881590	**MAN2012**
KADETT E Station wagon (35_, 36_, 45_, 46_)								
1.3 i Cat.	C 13 N	44	09/1988 → 08/1991		55	12	063534881590	**MAN2012**
1.3 N	13 N	44	09/1988 → 08/1991		55	12	063534881590	**MAN2012**
1.4 i	C 14 NZ	44	01/1990 → 08/1991		55	12	063534881590	**MAN2012**
1.4 S	14 NV	55	01/1990 → 08/1991		55	12	063534881590	**MAN2012**
1.6	16 SV	60	09/1986 → 08/1991		55	12	063534881590	**MAN2012**
1.6 i	E 16 NZ	55	09/1987 → 08/1991		55	12	063534881590	**MAN2012**
1.6 i Cat.	C 16 LZ, C 16 NZ	55	09/1986 → 08/1991		55	12	063534881590	**MAN2012**
1.6 S	16 SH	66	09/1984 → 08/1986		55	12	063534881590	**MAN2012**
MERIVA								
1.3 CDTI	Y 13 DT, Z 13 DT	51	04/2005 → 03/2010		90	12	063358061010	**MAN1097**
1.3 CDTI	Y 13 DT, Z 13 DT	51	04/2005 → 05/2010		70	12	063377423010	**MAN7423**
1.3 CDTI	Y 13 DT, Z 13 DT	51	04/2005 → 05/2010		105	12	063377424010	**MAN7424**
1.3 CDTI	Y 13 DT, Z 13 DT	51	04/2005 → 05/2010		120	12	063377425010	**MAN7425**
1.3 CDTI	Y 13 DT, Z 13 DT	51	04/2005 → 05/2010		105	12	063377494010	**MAN7494**
1.3 CDTI	Z 13 DTJ	55	09/2003 → 05/2010		90	12	063358061010	**MAN1097**
1.3 CDTI	Z 13 DTJ	55	09/2003 → 05/2010		105	12	063377494010	**MAN7494**
1.4 16V Twinport	Z 14 XEP	66	07/2004 → 05/2010		90	12	063358061010	**MAN1097**
1.4 16V Twinport LPG	Z 14 XEP	66	07/2004 → 05/2010		90	12	063358061010	**MAN1097**
1.6	Z 16 XEP	77	01/2006 → 03/2010		90	12	063358061010	**MAN1097**
1.6 Turbo	Z 16 LET	132	09/2005 → 03/2010		90	12	063358061010	**MAN1097**
MERIVA B								
1.3 CDTI	A 13 DTC	55	06/2010 →		70	12	063377493010	**MAN7493**
1.3 CDTI	A 13 DTC	55	06/2010 →		105	12	063377494010	**MAN7494**
1.3 CDTI	A 13 DTC	55	06/2010 →		120	12	063377495010	**MAN7495**
1.3 CDTI	A 13 DTE	70	06/2010 →		70	12	063377493010	**MAN7493**
1.3 CDTI	A 13 DTE	70	06/2010 →		105	12	063377494010	**MAN7494**
1.3 CDTI	A 13 DTE	70	06/2010 →		120	12	063377495010	**MAN7495**
OMEGA B (25_, 26_, 27_)								
2.0	20 SE	85	03/1994 → 08/1998		100	12	063533479010	**MAN2801**
2.0	X 20 SE	85	03/1994 → 09/1999		100	12	063533479010	**MAN2801**

		kW			A	V	LONG	SHORT
OPEL								
OMEGA B (25_, 26_, 27_)								
2.0 16V	X 20 XEV	100	03/1994 → 09/1999		100	12	063533479010	**MAN2801**
2.2 16V	Y 22 XE, Z 22 XE	106	09/1999 → 07/2003		100	12	063533479010	**MAN2801**
OMEGA B Station wagon (21_, 22_, 23_)								
2.0	X 20 SE	85	03/1994 → 09/1999		100	12	063533479010	**MAN2801**
2.0 16V	X 20 XEV	100	03/1994 → 09/1999		100	12	063533479010	**MAN2801**
2.2 16V	Y 22 XE, Z 22 XE	106	09/1999 → 07/2003		100	12	063533479010	**MAN2801**
SIGNUM								
1.9 CDTI	Z 19 DT	88	04/2004 →		120	12	063377490010	**MAN7490**
1.9 CDTI	Z 19 DT	74	10/2005 →		120	12	063377490010	**MAN7490**
1.9 CDTI	Z 19 DT	74	10/2005 →		130	12	063377491010	**MAN7491**
1.9 CDTI	Z 19 DT	88	04/2004 →		130	12	063377491010	**MAN7491**
1.9 CDTI	Z 19 DT	88	04/2004 →		105	12	063377492010	**MAN7492**
1.9 CDTI	Z 19 DT	74	10/2005 →		105	12	063377492010	**MAN7492**
1.9 CDTI	Z 19 DTH	110	04/2004 →		120	12	063377490010	**MAN7490**
1.9 CDTI	Z 19 DTH	110	04/2004 →		130	12	063377491010	**MAN7491**
1.9 CDTI	Z 19 DTH	110	04/2004 →		105	12	063377492010	**MAN7492**
TIGRA (95_)								
1.4 16V	X 14 XE	63	08/1997 → 08/1999		100	12	063533479010	**MAN2801**
1.4 16V	X 14 XE	66	07/1994 → 08/1999		100	12	063533479010	**MAN2801**
1.6 16V	C 16 SEL	74	08/1997 → 08/1998		100	12	063533479010	**MAN2801**
1.6 16V	X 16 XE	78	07/1994 → 08/1998		100	12	063533479010	**MAN2801**
TIGRA TwinTop								
1.3 CDTI	Z 13 DT	51	06/2004 →		90	12	063358061010	**MAN1097**
1.3 CDTI	Z 13 DT	51	06/2004 →		105	12	063377424010	**MAN7424**
1.3 CDTI	Z 13 DT	51	06/2004 →		120	12	063377425010	**MAN7425**
1.3 CDTI	Z 13 DT	51	07/2008 →		120	12	063377490010	**MAN7490**
1.3 CDTI	Z 13 DT	51	06/2004 →		70	12	063377493010	**MAN7493**
1.3 CDTI	Z 13 DT	51	06/2004 →		105	12	063377494010	**MAN7494**
1.4	Z 14 XEP	66	06/2004 → 12/2009		90	12	063358061010	**MAN1097**
VECTRA A (86_, 87_)								
1.4 S	14 NV	55	09/1988 → 06/1992		55	12	063534881590	**MAN2012**
1.6 i	16 LZ2	55	09/1993 → 11/1995		100	12	063533479010	**MAN2801**
1.6 i	16 LZ2	55	09/1993 → 08/1995		55	12	063534881590	**MAN2012**
1.6 i	E 16 NZ	55	09/1988 → 10/1990		55	12	063534881590	**MAN2012**
1.6 i	X 16 SZ	52	09/1993 → 08/1995		55	12	063534881590	**MAN2012**
1.6 i Cat.	C 16 NZ, C 16 NZ2	55	09/1993 → 11/1995		100	12	063533479010	**MAN2801**
1.6 i Cat.	C 16 NZ, C 16 NZ2	55	09/1988 → 08/1995		55	12	063534881590	**MAN2012**
1.8 i Cat.	C 18 NZ	66	03/1990 → 11/1995		100	12	063533479010	**MAN2801**
2.0	C 20 NEF	74	09/1988 → 09/1989		100	12	063533479010	**MAN2801**
2.0 i	20 NE	85	09/1988 → 10/1990		100	12	063533479010	**MAN2801**
2.0 i	20 SEH	95	09/1988 → 09/1992		100	12	063533479010	**MAN2801**
2.0 i 16V	X 20 XEV	100	06/1994 → 11/1995		100	12	063533479010	**MAN2801**
2.0 i 16V 4x4	X 20 XEV	100	06/1994 → 11/1995		100	12	063533479010	**MAN2801**

		kW			A	V	LONG	SHORT
OPEL								
VECTRA A (86_, 87_)								
2.0 i 4x4	20 NE	85	01/1989 → 10/1990		100	12	063533479010	**MAN2801**
2.0 i 4x4	20 SEH	95	01/1989 → 09/1992		100	12	063533479010	**MAN2801**
2.0 i 4x4 Cat.	C 20 NE	85	01/1989 → 11/1995		100	12	063533479010	**MAN2801**
2.0 i Cat.	C 20 NE	85	09/1988 → 11/1995		100	12	063533479010	**MAN2801**
2.0 i Turbo 4x4	C 20 LET	150	06/1994 → 11/1995		100	12	063533479010	**MAN2801**
2000 16V 4x4	20 XEJ	110	01/1989 → 10/1990		100	12	063533479010	**MAN2801**
2000/GT 16V	20 XEJ	110	01/1989 → 06/1994		100	12	063533479010	**MAN2801**
2000/GT 16V 4x4 Cat.	C 20 XE	110	02/1990 → 08/1992		100	12	063533479010	**MAN2801**
2000/GT 16V Cat.	C 20 XE	110	02/1990 → 11/1995		100	12	063533479010	**MAN2801**
VECTRA A 2 volumi /Coda spiovente (88_, 89_)								
1.4 S	14 NV	55	09/1988 → 06/1992		55	12	063534881590	**MAN2012**
1.6	C 16 LZ2	51	09/1992 → 07/1993		55	12	063534881590	**MAN2012**
1.6 i	16 LZ2	55	09/1993 → 11/1995		100	12	063533479010	**MAN2801**
1.6 i	16 LZ2	55	09/1993 → 08/1995		55	12	063534881590	**MAN2012**
1.6 i	X 16 SZ	52	09/1993 → 08/1995		55	12	063534881590	**MAN2012**
1.6 i Cat.	C 16 NZ, C 16 NZ2	55	09/1993 → 11/1995		100	12	063533479010	**MAN2801**
1.6 i Cat.	C 16 NZ, C 16 NZ2	55	09/1988 → 08/1995		55	12	063534881590	**MAN2012**
1.8 i Cat.	C 18 NZ	66	03/1990 → 11/1995		100	12	063533479010	**MAN2801**
2.0	C 20 NEF	74	04/1988 → 09/1989		100	12	063533479010	**MAN2801**
2.0 i	20 NE	85	09/1988 → 10/1990		100	12	063533479010	**MAN2801**
2.0 i 16V	20 XEJ	110	02/1989 → 10/1990		100	12	063533479010	**MAN2801**
2.0 i 16V	X 20 XEV	100	06/1994 → 11/1995		100	12	063533479010	**MAN2801**
2.0 i 16V Cat.	C 20 XE	110	02/1990 → 11/1995		100	12	063533479010	**MAN2801**
2.0 i Cat.	C 20 NE	85	09/1988 → 11/1995		100	12	063533479010	**MAN2801**
2.0 i GT	20 SEH	95	09/1988 → 11/1995		100	12	063533479010	**MAN2801**
VECTRA B (36_)								
1.6 i	16 LZ2	55	10/1995 → 04/2002		100	12	063533479010	**MAN2801**
1.6 i	X 16 SZR	55	09/1996 → 09/2000		100	12	063533479010	**MAN2801**
1.6 i 16V	X 16 XEL, Y 16 XE, Z 16 XE	74	10/1995 → 04/2002		100	12	063533479010	**MAN2801**
1.8 i 16V	Z 18 XE	92	09/2000 → 04/2002		100	12	063533479010	**MAN2801**
1.8 i 16V	X 18 XE1	85	10/1995 → 09/2000		100	12	063533479010	**MAN2801**
2.0 i	20 NEJ	82	10/1995 → 09/1999		100	12	063533479010	**MAN2801**
2.0 i 16V	C 20 SEL, X 20 XEV	100	10/1995 → 09/2000		100	12	063533479010	**MAN2801**
VECTRA B 2 volumi /Coda spiovente (38_)								
1.6 i	16 LZ2	55	10/1995 → 12/1998		100	12	063533479010	**MAN2801**
1.6 i	X 16 SZR	55	09/1996 → 09/2000		100	12	063533479010	**MAN2801**
1.6 i 16V	X 16 XEL, Y 16 XE, Z 16 XE	74	10/1995 → 07/2002		100	12	063533479010	**MAN2801**
1.8 i 16V	X 18 XE1	85	10/1995 → 09/2000		100	12	063533479010	**MAN2801**
1.8 i 16V	Z 18 XE	92	09/2000 → 07/2003		100	12	063533479010	**MAN2801**
2.0 i	20 NEJ	82	10/1995 → 09/1999		100	12	063533479010	**MAN2801**
2.0 i 16V	C 20 SEL, X 20 XEV	100	10/1995 → 09/2000		100	12	063533479010	**MAN2801**
VECTRA B Station wagon (31_)								
1.6 i	16 LZ2	55	11/1996 → 12/1998		100	12	063533479010	**MAN2801**

		kW			A	V	LONG	SHORT
OPEL								
VECTRA B Station wagon (31_)								
1.6 i	X 16 SZR	55	11/1996 → 06/2000		100	12	063533479010	**MAN2801**
1.6 i 16V	X 16 XEL, Y 16 XE, Z 16 XE	74	11/1996 → 07/2002		100	12	063533479010	**MAN2801**
1.8 i 16V	X 18 XE1	85	11/1996 → 09/2000		100	12	063533479010	**MAN2801**
1.8 i 16V	Z 18 XE	92	09/2000 → 07/2003		100	12	063533479010	**MAN2801**
2.0 i	20 NEJ	82	11/1996 → 09/1999		100	12	063533479010	**MAN2801**
2.0 i 16V	C 20 SEL, X 20 XEV	100	11/1996 → 09/2000		100	12	063533479010	**MAN2801**
VECTRA C								
1.9 CDTI	Z 19 DT	74	10/2005 →		120	12	063377490010	**MAN7490**
1.9 CDTI	Z 19 DT	88	04/2004 →		120	12	063377490010	**MAN7490**
1.9 CDTI	Z 19 DT	88	04/2004 →		130	12	063377491010	**MAN7491**
1.9 CDTI	Z 19 DT	74	10/2005 →		130	12	063377491010	**MAN7491**
1.9 CDTI	Z 19 DT	74	10/2005 →		105	12	063377492010	**MAN7492**
1.9 CDTI	Z 19 DT	88	04/2004 →		105	12	063377492010	**MAN7492**
1.9 CDTI	Z 19 DTH	110	04/2004 →		120	12	063377490010	**MAN7490**
1.9 CDTI	Z 19 DTH	110	04/2004 →		130	12	063377491010	**MAN7491**
1.9 CDTI	Z 19 DTH	110	04/2004 →		105	12	063377492010	**MAN7492**
VECTRA C GTS								
1.9 CDTI	Z 19 DT	74	10/2005 →		120	12	063377490010	**MAN7490**
1.9 CDTI	Z 19 DT	88	04/2004 →		120	12	063377490010	**MAN7490**
1.9 CDTI	Z 19 DT	74	10/2005 →		130	12	063377491010	**MAN7491**
1.9 CDTI	Z 19 DT	88	04/2004 →		130	12	063377491010	**MAN7491**
1.9 CDTI	Z 19 DT	74	10/2005 →		105	12	063377492010	**MAN7492**
1.9 CDTI	Z 19 DT	88	04/2004 →		105	12	063377492010	**MAN7492**
1.9 CDTI	Z 19 DTH	110	04/2004 →		120	12	063377490010	**MAN7490**
1.9 CDTI	Z 19 DTH	110	04/2004 →		130	12	063377491010	**MAN7491**
1.9 CDTI	Z 19 DTH	110	04/2004 →		105	12	063377492010	**MAN7492**
VECTRA C Station wagon								
1.9 CDTI	Z 19 DT	88	04/2004 →		120	12	063377490010	**MAN7490**
1.9 CDTI	Z 19 DT	88	04/2004 →		130	12	063377491010	**MAN7491**
1.9 CDTI	Z 19 DT	88	04/2004 →		105	12	063377492010	**MAN7492**
1.9 CDTI	Z 19 DTH	110	04/2004 →		120	12	063377490010	**MAN7490**
1.9 CDTI	Z 19 DTH	110	04/2004 →		130	12	063377491010	**MAN7491**
1.9 CDTI	Z 19 DTH	110	04/2004 →		105	12	063377492010	**MAN7492**
1.9 CDTI	Z 19 DTL	74	10/2005 →		120	12	063377490010	**MAN7490**
1.9 CDTI	Z 19 DTL	74	10/2005 →		130	12	063377491010	**MAN7491**
1.9 CDTI	Z 19 DTL	74	10/2005 →		105	12	063377492010	**MAN7492**
ZAFIRA								
1.9 CDTI	Z 19 DT	88	07/2008 →		120	12	063377490010	**MAN7490**
1.9 CDTI	Z 19 DT	88	07/2008 →		130	12	063377491010	**MAN7491**
1.9 CDTI	Z 19 DT	88	07/2008 →		105	12	063377492010	**MAN7492**
1.9 CDTI	Z 19 DTH	110	07/2008 →		120	12	063377490010	**MAN7490**
1.9 CDTI	Z 19 DTH	110	07/2008 →		130	12	063377491010	**MAN7491**
1.9 CDTI	Z 19 DTH	110	07/2008 →		105	12	063377492010	**MAN7492**

		kW			A	V	LONG	SHORT
OPEL								
ZAFIRA								
1.9 CDTI	Z 19 DTL	74	07/2008 →		120	12	063377490010	**MAN7490**
1.9 CDTI	Z 19 DTL	74	07/2008 →		130	12	063377491010	**MAN7491**
1.9 CDTI	Z 19 DTL	74	07/2008 →		105	12	063377492010	**MAN7492**
PEUGEOT								
1007 (KM_)								
1.4	KFV (TU3JP)	54	04/2005 →		80	12	063377301010	**MAN7301**
1.4 16V	KFU (ET3J4)	65	01/2006 →		80	12	063377301010	**MAN7301**
1.6 16V	NFU (TU5JP4)	80	04/2005 →	⊛	80	12	063377301010	**MAN7301**
106 I (1A, 1C)								
1.0	CDY (TU9M), TU9	33	07/1992 → 04/1996		70	12	063533350070	**MAN2005**
1.0	CDZ (TU9M)	37	07/1992 → 04/1996		70	12	063533350070	**MAN2005**
1.1	HDZ (TU1M)	44	09/1991 → 12/1993		70	12	063533350070	**MAN2005**
1.3	TU2J2	72	10/1993 → 04/1996		70	12	063533350070	**MAN2005**
1.4	KDX (TU3MC), KDY (TU3M)	55	09/1991 → 04/1996		70	12	063533350070	**MAN2005**
1.4	KFZ (TU3J2/Z)	69	09/1991 → 04/1996		70	12	063533350070	**MAN2005**
1.4	TU 3	51	07/1992 → 03/1996		70	12	063533350070	**MAN2005**
1.6	NFY (TU5J2)	76	01/1994 → 04/1996		70	12	063533350070	**MAN2005**
1.6	NFZ (TU5JP)	65	06/1993 → 04/1996		70	12	063533350070	**MAN2005**
106 II (1)								
1.0 i	CDY (TU9M)	33	01/2002 →		75	12	063341734010	**MAN1166**
1.0 i	CDY (TU9M)	33	01/2000 →	⊛	75	12	063341740010	**MAN1163**
1.0 i	CDY (TU9M)	33	05/1996 → 05/2005		70	12	063533350070	**MAN2005**
1.0 i	CDZ (TU9M)	37	01/2002 →		75	12	063341734010	**MAN1166**
1.0 i	CDZ (TU9M)	37	01/2000 →	⊛	75	12	063341740010	**MAN1163**
1.0 i	CDZ (TU9M)	37	01/1997 → 05/2005		70	12	063533350070	**MAN2005**
1.1 i	HDY (TU1M)	40	01/2002 →		75	12	063341734010	**MAN1166**
1.1 i	HDY (TU1M)	40	01/2000 → 05/2005	⊛	75	12	063341740010	**MAN1163**
1.1 i	HDY (TU1M)	40	01/1997 → 05/2005		70	12	063533350070	**MAN2005**
1.1 i	HDZ (TU1M), HFX (TU1JP)	44	01/2002 →		75	12	063341734010	**MAN1166**
1.1 i	HDZ (TU1M), HFX (TU1JP)	44	01/2000 →	⊛	75	12	063341740010	**MAN1163**
1.1 i	HDZ (TU1M), HFX (TU1JP)	44	05/1996 → 05/2005		70	12	063533350070	**MAN2005**
1.4 i	KFW (TU3JP), KFX (TU3JP)	55	01/2002 →		75	12	063341734010	**MAN1166**
1.4 i	KFW (TU3JP), KFX (TU3JP)	55	01/2000 → 05/2005	⊛	75	12	063341740010	**MAN1163**
1.4 i	KFW (TU3JP), KFX (TU3JP)	55	05/1996 → 05/2005		70	12	063533350070	**MAN2005**
1.6 i	NFW (TU5J2), NFY (TU5J2)	74	01/2002 →		75	12	063341734010	**MAN1166**
1.6 i	NFW (TU5J2), NFY (TU5J2)	74	01/2000 →	⊛	75	12	063341740010	**MAN1163**
1.6 i	NFZ (TU5JP)	65	01/2002 →		75	12	063341734010	**MAN1166**
1.6 i	NFZ (TU5JP)	65	01/2000 → 05/2005	⊛	75	12	063341740010	**MAN1163**
1.6 S16	NFX (TU5J4)	87	01/2002 →		75	12	063341734010	**MAN1166**
1.6 S16	NFX (TU5J4)	87	01/2000 →	⊛	75	12	063341740010	**MAN1163**

		kW		i	A	V	LONG	SHORT
PEUGEOT								
107								
1.4 HDi	8HT (DV4TD)	40	06/2005 →		90	12	063321734010	**MAN963**
206 2 volumi /Coda spiovente (2A/C)								
1.1		40	08/1998 → 07/2000		90	12	063321734010	**MAN963**
1.1		40	08/1998 → 07/2000	⊛	70	12	063533350070	**MAN2005**
1.1 i	HFX (TU1JP), HFZ (TU1JP)	44	09/1998 → 10/2005		90	12	063321734010	**MAN963**
1.1 i	HFX (TU1JP), HFZ (TU1JP)	44	09/1998 →		75	12	063341734010	**MAN1166**
1.1 i	HFX (TU1JP), HFZ (TU1JP)	44	09/1998 → 10/2005	⊛	70	12	063533350070	**MAN2005**
1.4 16V	KFU (ET3J4)	65	10/2003 →		90	12	063321734010	**MAN963**
1.4 i	KFW (TU3JP), KFX (TU3JP), TU 3 JP	55	09/1998 → 02/2009		90	12	063321734010	**MAN963**
1.4 i	KFW (TU3JP), KFX (TU3JP), TU 3 JP	55	09/1998 →		75	12	063341734010	**MAN1166**
1.4 i	KFW (TU3JP), KFX (TU3JP), TU 3 JP	55	09/1998 → 02/2009	⊛	70	12	063533350070	**MAN2005**
1.4 LPG		55	05/2006 → 09/2007	⊛	70	12	063533350070	**MAN2005**
1.6 16V	NFU (TU5JP4)	80	12/2000 → 08/2007		90	12	063321734010	**MAN963**
1.6 16V	NFU (TU5JP4)	80	12/2000 →		75	12	063341734010	**MAN1166**
1.6 16V	NFU (TU5JP4)	80	06/2003 →		80	12	063377301010	**MAN7301**
1.6 16V	NFU (TU5JP4)	80	12/2000 → 08/2007	⊛	70	12	063533350070	**MAN2005**
1.6 i	NFZ (TU5JP)	65	09/1998 → 12/2000		90	12	063321734010	**MAN963**
1.6 i	NFZ (TU5JP)	65	09/1998 → 12/2000		75	12	063341734010	**MAN1166**
1.6 i	NFZ (TU5JP)	65	09/1998 → 12/2000	⊛	70	12	063533350070	**MAN2005**
2.0 S16	RFN (EW10J4)	100	10/2000 →		90	12	063321734010	**MAN963**
2.0 S16	RFR (DEW10J4)	99	04/1999 → 10/2000		90	12	063321734010	**MAN963**
206 CC (2D)								
1.6 16V	NFU (TU5JP4)	80	09/2000 →		90	12	063321734010	**MAN963**
1.6 16V	NFU (TU5JP4)	80	09/2000 →		75	12	063341734010	**MAN1166**
1.6 16V	NFU (TU5JP4)	80	02/2001 →		80	12	063377301010	**MAN7301**
2.0 S16	RFN (EW10J4)	100	09/2000 →		90	12	063321734010	**MAN963**
206 SW (2E/K)								
1.1	HFX (TU1JP)	44	07/2002 → 10/2005		90	12	063321734010	**MAN963**
1.1	HFX (TU1JP)	44	07/2002 →		75	12	063341734010	**MAN1166**
1.1	HFX (TU1JP)	44	07/2002 → 10/2005	⊛	70	12	063533350070	**MAN2005**
1.4	KFW (TU3JP)	55	07/2002 → 12/2006		90	12	063321734010	**MAN963**
1.4	KFW (TU3JP)	55	07/2002 →		75	12	063341734010	**MAN1166**
1.4	KFW (TU3JP)	55	07/2002 → 12/2006	⊛	70	12	063533350070	**MAN2005**
1.4 16V	KFU (ET3J4)	65	10/2003 →		90	12	063321734010	**MAN963**
1.4 16V	KFU (ET3J4)	65	10/2003 →		75	12	063341734010	**MAN1166**
1.6 16V	NFU (TU5JP4)	80	07/2002 → 12/2006		90	12	063321734010	**MAN963**
1.6 16V	NFU (TU5JP4)	80	07/2002 →		75	12	063341734010	**MAN1166**
1.6 16V	NFU (TU5JP4)	80	10/2005 →		80	12	063377301010	**MAN7301**
1.6 16V	NFU (TU5JP4)	80	07/2002 → 12/2006	⊛	70	12	063533350070	**MAN2005**
206 Tre volumi								
1.6 16V	NFU (TU5JP4)	80	03/2007 →	⊛	70	12	063533350070	**MAN2005**

		kW		i	A	V	MAGNETI MARELLI LONG	MAGNETI MARELLI SHORT
PEUGEOT								
206+ (T3E)								
1.4 i	KFV (TU3A), KFW (TU3A)	55	01/2009		75	12	063341734010	**MAN1166**
207 (WA_, WC_)								
1.4	KFV (TU3A)	53	03/2006 →	⊛	80	12	063377301010	**MAN7301**
1.4 16V	KFU (ET3J4)	65	03/2006 →	⊛	80	12	063377301010	**MAN7301**
1.6 16V	NFU (TU5JP4)	80	03/2006 →		80	12	063377301010	**MAN7301**
207 SW (WK_)								
1.4	KFV (TU3A)	54	10/2007 →	⊛	80	12	063377301010	**MAN7301**
306 (7B, N3, N5)								
1.1	HDZ (TU1M)	44	06/1994 → 04/1997		70	12	063533350070	**MAN2005**
1.4 SL	KDX (TU3MC), KFW (TU3JP), KFX (TU3JP)	55	12/2000 → 05/2001	⊛	75	12	063341740010	**MAN1163**
1.4 SL	KDX (TU3MC), KFW (TU3JP), KFX (TU3JP)	55	04/1997 → 10/2000		70	12	063533350070	**MAN2005**
1.6	NFT	72	12/2000 → 05/2001	⊛	75	12	063341740010	**MAN1163**
1.6	NFT	72	10/2000 → 05/2001	⊛	70	12	063533350070	**MAN2005**
1.6 SR	NFZ (TU5JP)	65	01/2000 → 10/2000	⊛	75	12	063341740010	**MAN1163**
1.6 SR	NFZ (TU5JP)	65	06/1994 → 04/1997	⊛	70	12	063533350070	**MAN2005**
306 2 volumi /Coda spiovente (7A, 7C, N3, N5)								
1.1	HDZ (TU1M)	44	05/1993 → 04/1997		70	12	063533350070	**MAN2005**
1.4	KDX (TU3MC), KFW (TU3JP), KFX (TU3JP)	55	12/2000 → 05/2001	⊛	75	12	063341740010	**MAN1163**
1.4	KDX (TU3MC), KFW (TU3JP), KFX (TU3JP)	55	04/1997 → 10/2000		70	12	063533350070	**MAN2005**
1.6	NFT	72	12/2000 → 05/2001	⊛	75	12	063341740010	**MAN1163**
1.6	NFZ (TU5JP)	65	01/2000 → 10/2000	⊛	75	12	063341740010	**MAN1163**
1.6	NFT	72	10/2000 → 05/2001	⊛	70	12	063533350070	**MAN2005**
1.6	NFZ (TU5JP)	65	05/1993 → 10/2000		70	12	063533350070	**MAN2005**
306 Break (7E, N3, N5)								
1.4	KFW (TU3JP), KFX (TU3JP)	55	01/2002 → 04/2002		75	12	063341734010	**MAN1166**
1.4	KFW (TU3JP), KFX (TU3JP)	55	12/2000 → 03/2002	⊛	75	12	063341740010	**MAN1163**
1.4	KFW (TU3JP), KFX (TU3JP)	55	05/1997 → 03/2002	⊛	70	12	063533350070	**MAN2005**
1.6	NFT	72	01/2002 → 04/2002		75	12	063341734010	**MAN1166**
1.6	NFZ (TU5JP)	65	01/2000 → 10/2000	⊛	75	12	063341740010	**MAN1163**
1.6	NFT	72	12/2000 → 03/2002	⊛	75	12	063341740010	**MAN1163**
1.6	NFZ (TU5JP)	65	05/1997 → 10/2000	⊛	70	12	063533350070	**MAN2005**
1.6	NFT	72	10/2000 → 03/2002		70	12	063533350070	**MAN2005**
306 Cabriolet (7D, N3, N5)								
1.6	NFT	72	01/2002 → 04/2002		75	12	063341734010	**MAN1166**
1.6	NFZ (TU5JP)	65	01/2000 → 10/2000	⊛	75	12	063341740010	**MAN1163**
1.6	NFT	72	12/2000 → 04/2002	⊛	75	12	063341740010	**MAN1163**
1.6	NFZ (TU5JP)	65	04/1996 → 04/1997		70	12	063533350070	**MAN2005**
1.6	NFT	72	10/2000 → 04/2002	⊛	70	12	063533350070	**MAN2005**

		kW		i	A	V	MAGNETI MARELLI LONG	MAGNETI MARELLI SHORT
PEUGEOT								
307 (3A/C)								
1.4	KFW (TU3JP)	55	08/2000 →	⊛	80	12	063377301010	**MAN7301**
1.4 16V	KFU (ET3J4)	65	06/2005 →		80	12	063377301010	**MAN7301**
1.6 16V	NFU (TU5JP4)	80	08/2000 →	⊛	80	12	063377301010	**MAN7301**
1.6 BioFlex	NFU (TU5JP4)	80	09/2007 →		80	12	063377301010	**MAN7301**
2.0 16V	RFN (EW10J4)	100	08/2000 →		90	12	063321734010	**MAN963**
307 Break (3E)								
1.4	TU 3 JP	55	04/2002 → 09/2003		80	12	063377301010	**MAN7301**
1.4 16V	KFU (ET3J4)	65	11/2003 →		80	12	063377301010	**MAN7301**
1.6 16V	NFU (TU5JP4)	80	04/2002 →		90	12	063377300010	**MAN7300**
1.6 16V	NFU (TU5JP4)	80	04/2002 →	⊛	80	12	063377301010	**MAN7301**
1.6 BioFlex	NFU (TU5JP4)	80	09/2007 →		80	12	063377301010	**MAN7301**
2.0	RFN (EW10J4)	100	03/2002 →		90	12	063321734010	**MAN963**
307 CC (3B)								
1.6 16V	NFU (TU5JP4)	80	06/2005 →	⊛	80	12	063377301010	**MAN7301**
2.0 16V	RFK (EW10J4S)	130	10/2003 → 05/2005		90	12	063321734010	**MAN963**
2.0 16V	RFN (EW10J4)	100	10/2003 →		90	12	063321734010	**MAN963**
307 SW (3H)								
1.4	TU 3 JP	55	04/2002 → 09/2003		80	12	063377301010	**MAN7301**
1.4 16V	KFU (ET3J4)	65	11/2003 →		80	12	063377301010	**MAN7301**
1.6 16V	NFU (TU5JP4)	80	04/2002 →		90	12	063377300010	**MAN7300**
1.6 16V	NFU (TU5JP4)	80	03/2002 →	⊛	80	12	063377301010	**MAN7301**
1.6 BioFlex	NFU (TU5JP4)	80	09/2007 →		80	12	063377301010	**MAN7301**
2.0 16V	RFN (EW10J4)	100	03/2002 →		90	12	063321734010	**MAN963**
405 II (4B)								
1.4	KDX (TU3MC)	55	08/1992 → 10/1995		70	12	063533350070	**MAN2005**
405 II Break (4E)								
1.4	KDX (TU3MC)	55	08/1992 → 10/1996		70	12	063533350070	**MAN2005**
406 (8B)								
1.8 16V	6FZ (EW7J4)	85	10/2000 → 05/2004		90	12	063321734010	**MAN963**
1.8 16V	6FZ (EW7J4)	85	01/2002 → 05/2004		75	12	063341734010	**MAN1166**
2.0 16V	RFN (EW10J4)	100	08/2000 → 05/2004		90	12	063321734010	**MAN963**
2.0 16V HPi	RLZ (EW10D)	103	05/2001 → 05/2004		90	12	063321734010	**MAN963**
2.2	3FZ (EW12J4)	116	07/2000 → 05/2004		90	12	063321734010	**MAN963**
406 Break (8E/F)								
1.8 16V	6FZ (EW7J4)	85	10/2000 → 06/2004		90	12	063321734010	**MAN963**
1.8 16V	6FZ (EW7J4)	85	01/2002 → 04/2004		75	12	063341734010	**MAN1166**
2.0 16V	RFN (EW10J4)	100	10/2000 → 06/2004		90	12	063321734010	**MAN963**
2.0 16V HPi	RLZ (EW10D)	103	05/2001 → 06/2004		90	12	063321734010	**MAN963**
2.2	3FZ (EW12J4)	116	07/2000 → 06/2004		90	12	063321734010	**MAN963**
406 Coupe (8C)								
2.0 16V	RFN (EW10J4)	100	10/2000 → 12/2004		90	12	063321734010	**MAN963**
2.2	3FZ (EW12J4)	116	03/2002 → 12/2004		90	12	063321734010	**MAN963**

		kW		i	A	V	LONG	SHORT
PEUGEOT								
407 (6D_)								
1.8	6FZ (EW7J4)	85	05/2004 →		90	12	063321734010	**MAN963**
1.8 16V	6FY (EW7A)	92	09/2005 →		90	12	063321734010	**MAN963**
2.2	3FZ (EW12J4)	116	05/2004 →		90	12	063321734010	**MAN963**
407 SW (6E_)								
1.8	6FZ (EW7J4)	85	05/2004 →		90	12	063321734010	**MAN963**
1.8 16V	6FY (EW7A)	92	09/2005 →		90	12	063321734010	**MAN963**
607 (9D, 9U)								
2.0	RFN (EW10J4)	100	02/2000 →		75	12	063341734010	**MAN1166**
807 (E)								
2.0	RFN (EW10J4)	100	06/2002 →		90	12	063321734010	**MAN963**
2.2	3FZ (EW12J4)	116	06/2002 →		90	12	063321734010	**MAN963**
BIPPER (AA_)								
1.4	KFV (TU3A)	54	02/2008 →		90	12	063321734010	**MAN963**
1.4	KFV (TU3A)	54	02/2008 →		75	12	063341734010	**MAN1166**
BIPPER Tepee								
1.4	KFV (TU3A)	54	04/2008 →		75	12	063341734010	**MAN1166**
BOXER Autobus (230P)								
2.8 D	8140.63 (F28D)	64	01/1999 → 02/2002		80	12	063388505010	**MAN966**
2.8 DTiC	8140.43 (F28DT)	90	10/1999 → 09/2000		80	12	063388505010	**MAN966**
2.8 HDi	8140.43S (F28DTCR)	93	10/2000 → 11/2001		120	12	063310508010	**MAN958**
2.8 HDI	8140.43S (F28DTCR)	94	11/2000 → 04/2002		120	12	063310508010	**MAN958**
2.8 HDi	8140.43S (F28DTCR)	93	10/2000 → 11/2001		80	12	063388505010	**MAN966**
2.8 HDI	8140.43S (F28DTCR)	94	11/2000 → 04/2002		80	12	063388505010	**MAN966**
2.8 HDi 4 ruote motrici	8140.43S (F28DTCR)	93	10/2000 → 11/2001		120	12	063310508010	**MAN958**
2.8 HDi 4 ruote motrici	8140.43S (F28DTCR)	93	10/2000 → 11/2001		80	12	063388505010	**MAN966**
2.8 HDi 4x4	8140.43S (F28DTCR)	94	10/2000 → 04/2002		120	12	063310508010	**MAN958**
2.8 HDi 4x4	8140.43S (F28DTCR)	94	10/2000 → 04/2002		80	12	063388505010	**MAN966**
BOXER Autobus (244, Z_)								
2.8 HDi	8140.43N	107	04/2004 →		120	12	063310508010	**MAN958**
2.8 HDi	8140.43S (F28DTCR)	94	04/2002 → 06/2006		120	12	063310508010	**MAN958**
2.8 HDi 4x4	8140.43S (F28DTCR)	94	04/2002 →		120	12	063310508010	**MAN958**
BOXER Furgonato (230L)								
2.5 DT		62	01/1999 → 11/2001		80	12	063388505010	**MAN966**
2.8 D	8140.63 (F28D)	64	01/1999 → 02/2002		80	12	063388505010	**MAN966**
2.8 DTiC	8140.43 (F28DT)	90	10/1999 → 09/2000		80	12	063388505010	**MAN966**
2.8 HDi	8140.43S (F28DTCR)	93	10/2000 → 11/2001		120	12	063310508010	**MAN958**
2.8 HDI	8140.43S (F28DTCR)	94	11/2000 → 04/2002		120	12	063310508010	**MAN958**

		kW		i	A	V	LONG	SHORT
PEUGEOT								
BOXER Furgonato (230L)								
2.8 HDi	8140.43S (F28DTCR)	93	10/2000 → 11/2001		80	12	063388505010	**MAN966**
2.8 HDI	8140.43S (F28DTCR)	94	11/2000 → 04/2002		80	12	063388505010	**MAN966**
2.8 HDi 4x4	8140.43S (F28DTCR)	94	10/2000 → 04/2002		120	12	063310508010	**MAN958**
2.8 HDi 4x4	8140.43S (F28DTCR)	94	10/2000 → 04/2002		80	12	063388505010	**MAN966**
2.8 HDi 4x4		93	10/2000 → 11/2001		120	12	063310508010	**MAN958**
2.8 HDi 4x4		93	10/2000 → 11/2001		80	12	063388505010	**MAN966**
BOXER Furgonato (244)								
2.8 HDi	8140.43N	107	04/2004 → 06/2006		120	12	063310508010	**MAN958**
2.8 HDi	8140.43S (F28DTCR)	94	04/2002 → 06/2006		120	12	063310508010	**MAN958**
2.8 HDi 4x4	8140.43S (F28DTCR)	94	04/2004 → 08/2005		120	12	063310508010	**MAN958**
BOXER Pianale piatto/Telaio (244)								
2.8 HDi	8140.43N	107	04/2004 → 06/2006		120	12	063310508010	**MAN958**
2.8 HDi	8140.43S (F28DTCR)	94	04/2002 → 06/2006		120	12	063310508010	**MAN958**
2.8 HDi 4x4	8140.43S (F28DTCR)	94	04/2002 → 08/2005		120	12	063310508010	**MAN958**
BOXER Pianale piatto/Telaio (ZCT_)								
2.8 D		64	01/1999 → 02/2002		80	12	063388505010	**MAN966**
2.8 HDi	8140.43S (F28DTCR)	93	10/2000 → 11/2001		120	12	063310508010	**MAN958**
2.8 HDI	8140.43S (F28DTCR)	94	11/2000 → 12/2001		120	12	063310508010	**MAN958**
EXPERT Furgonato (222)								
1.9 D 70	WJY (DW8B), WJZ (DW8)	51	12/1998 →		90	12	063321734010	**MAN963**
PARTNER Combispace (5F)								
1.1	HDZ (TU1M), HFX (TU1JP)	44	06/1996 →		90	12	063321734010	**MAN963**
1.1	HDZ (TU1M), HFX (TU1JP)	44	07/1996 → 08/2002		75	12	063341740010	**MAN1163**
1.1	HDZ (TU1M), HFX (TU1JP)	44	07/1996 → 08/2002		70	12	063533350070	**MAN2005**
1.4		54	11/2002 → 10/2006		90	12	063321734010	**MAN963**
1.4	KFW (TU3JP), KFX (TU3JP), TU32	55	07/1996 → 08/2002		75	12	063341740010	**MAN1163**
1.4	KFW (TU3JP), KFX (TU3JP), TU32	55	07/1996 → 08/2002		70	12	063533350070	**MAN2005**
1.6 16V	NFU (TU5JP4)	80	07/2001 → 04/2008		90	12	063321734010	**MAN963**
1.6 16V	NFU (TU5JP4)	80	07/2001 → 08/2002		75	12	063341740010	**MAN1163**
1.9 D	WJY (DW8B), WJZ (DW8)	51	12/1998 →		90	12	063321734010	**MAN963**

		kW			A	V	LONG	SHORT
PEUGEOT								
PARTNER Furgonato								
1.6		80	04/2008 →		75	12	063341734010	**MAN1166**
1.6	NFR (TU5JP4B)	66	04/2008 →		75	12	063341734010	**MAN1166**
PARTNER Furgonato (5)								
1.1	HDZ (TU1M)	44	07/1996 → 08/2002		75	12	063341740010	**MAN1163**
1.1	HDZ (TU1M)	44	07/1996 → 08/2002		70	12	063533350070	**MAN2005**
1.4		54	11/2002 → 10/2006		90	12	063321734010	**MAN963**
1.4	KFX (TU3JP), TU32	55	07/1996 → 08/2002		75	12	063341740010	**MAN1163**
1.4	KFX (TU3JP), TU32	55	07/1996 → 08/2002		70	12	063533350070	**MAN2005**
1.4 BiFuel	KFW (TU3JP)	55	04/2003 →		90	12	063321734010	**MAN963**
1.6		80	09/2000 → 08/2002		75	12	063341740010	**MAN1163**
1.9 D	DJY (XUD9A)	51	06/1996 →		90	12	063321734010	**MAN963**
PARTNER Tepee								
1.6	NFR (TU5JP4B)	66	04/2008 →		75	12	063341734010	**MAN1166**
1.6	NFU (TU5JP4)	80	04/2008 →		75	12	063341734010	**MAN1166**
RENAULT								
15 (130_)								
1.3 (1300)	810.05	44	03/1972 → 12/1977		55	12	054022384010	**MAN653**
1.6 (1302)	807.10	66	03/1972 → 12/1976		55	12	054022384010	**MAN653**
16 (115_)								
1.5		40	09/1965 → 12/1970		55	12	054022384010	**MAN653**
1.6 TA		52	01/1976 → 07/1979		55	12	054022384010	**MAN653**
1.6 TL	821	40	01/1976 → 04/1977		55	12	054022384010	**MAN653**
1.6 TL (1152, 1153, 1157)	821, 821.03, 821.04	48	01/1971 → 12/1977		55	12	054022384010	**MAN653**
1.6 TS (1151, 1154)	807, 807.04, 807.05	61	09/1968 → 12/1976		55	12	054022384010	**MAN653**
1.6 TX (1156)	843, 843.01	68	06/1974 → 07/1979		55	12	054022384010	**MAN653**
17								
1.6	843.05	68	03/1976 → 04/1977		55	12	054022384010	**MAN653**
1.6	807.10	66	03/1972 → 12/1976		55	12	054022384010	**MAN653**
1.6 Gordini	844 12	79	05/1977 → 06/1977		55	12	054022384010	**MAN653**
CLIO II (BB0/1/2_, CB0/1/2_)								
1.4 (B/CB0C)	E7J 780	55	09/1998 → 05/2005	⊛	105	12	063310506010	**MAN956**
1.4 16V (B/CB0L)	K4J 712, K4J 713	70	10/1999 → 08/2000		105	12	063310506010	**MAN956**
1.4 16V (B/CB0P)	K4J 700, K4J 710, K4J 711, K4J 712, K4J 713	72	08/2000 →		105	12	063310506010	**MAN956**
1.6 (B/CB0D)	K7M 744, K7M 745	66	09/1998 → 03/2001	⊛	105	12	063310506010	**MAN956**
KANGOO (KC0/1_)								
1.4 (KC0C, KC0H, KC0B, KC0M)	E7J 634, E7J 635, E7J 780, K7J 700, K7J 701	55	09/1997 → 02/2003	⊛	105	12	063310506010	**MAN956**
KANGOO Express (FC0/1_)								
1.4 (FC0C, FC0B, FC0H, FC0M)	E7J 634, E7J 635, E7J 780, K7J 701	55	09/1997 → 02/2003	⊛	105	12	063310506010	**MAN956**

		kW		i	A	V	MAGNETI MARELLI LONG	MAGNETI MARELLI SHORT
RENAULT								
LAGUNA II (BG0/1_)								
1.6 16V	K4M 716	82	02/2005 →		105	12	063310506010	**MAN956**
THALIA (LB0/1/2_)								
1.4	K7J 700	55	08/2000 → 03/2001	⊛	105	12	063310506010	**MAN956**
1.6	K7M 746	66	04/2001 → 05/2001		105	12	063310506010	**MAN956**
ROVER								
100 (METRO) (XP)								
114 GSi	14 K4F	76	10/1994 → 10/1995		55	12	063534892520	**MAN2035**
200 (RF)								
216 Si	16 K4F	82	11/1995 → 12/1996		55	12	054022598010	**MAN666**
200 (XH)								
216	16 H	61	03/1985 → 09/1989	⊛	55	12	054022598010	**MAN666**
216	16 H	61	03/1985 → 09/1989		75	12	063532614010	**MAN2614**
216 Vitesse	16 H	75	03/1985 → 09/1989	⊛	55	12	054022598010	**MAN666**
216 Vitesse	16 H	75	03/1985 → 09/1989		75	12	063532614010	**MAN2614**
200 2 volumi /Coda spiovente (XW)								
216 GSi	D 16 A7	85	10/1989 → 10/1995	⊛	55	12	054022598010	**MAN666**
216 GSi	D 16 A7	85	10/1989 → 10/1995		75	12	063532614010	**MAN2614**
216 GSi	D 16 Z2	82	10/1989 → 10/1995	⊛	55	12	054022598010	**MAN666**
216 GSi	D 16 Z2	82	10/1989 → 10/1995		75	12	063532614010	**MAN2614**
200 Coupe (XW)								
216	D 16 A8	90	10/1992 → 02/1996	⊛	55	12	054022598010	**MAN666**
216	D 16 A8	90	10/1992 → 06/1999		75	12	063532614010	**MAN2614**
800 (XS)								
825 D/SD (XS)	425 SL1RR, 492 4 SHIRG	87	01/1990 → 02/1999		72	12	054022656010	**MAN766**
800 2 volumi /Coda spiovente (XS)								
825 D/SD (XS)	425 SL1RR, 492 4 SHIRG	87	01/1992 → 02/1999		72	12	054022656010	**MAN766**
MAESTRO								
1.3		49	09/1990 → 01/1995		55	12	063324157010	**MAN102**
1.3		51	09/1990 → 01/1995		55	12	063324157010	**MAN102**
1.6		63	09/1990 → 12/1993		55	12	054022598010	**MAN666**
1.6		63	09/1990 → 01/1995		75	12	063532614010	**MAN2614**
2.0 D		44	09/1990 → 10/1992		55	12	063324157010	**MAN102**
2.0 TD	BB	60	09/1990 → 01/1995		55	12	063324157010	**MAN102**
MINI MK I								
1000	99 HD 81	30	01/1992 → 12/1992		45	12	063324199010	**MAN107**
1300	12 A2D	39	01/1992 → 04/1995		55	12	063324157010	**MAN102**
MONTEGO								
1.6	16 HL	61	10/1990 → 09/1992	⊛	55	12	054022598010	**MAN666**
2.0 D Turbo	BB	60	10/1988 → 12/1993		55	12	054022384010	**MAN653**
2.0 D Turbo	BB	60	10/1988 → 12/1993	◎	55	12	063324157010	**MAN102**

		kW			A	V	LONG	SHORT
ROVER								
MONTEGO Estate (XE)								
1.6	16 HL	61	10/1990 → 09/1992		55	12	054022598010	**MAN666**
2.0 GTI/LXI	20 H	75	12/1990 → 12/1993		55	12	063324157010	**MAN102**
2.0 Turbo-D	BB	60	01/1993 → 12/1993		55	12	054022384010	**MAN653**
SAAB								
9-3 (YS3F)								
1.9 TiD	Z 19 DT	88	09/2004 →		130	12	063377491010	**MAN7491**
1.9 TiD	Z 19 DTH	110	09/2004 →		130	12	063377491010	**MAN7491**
9-3 Station wagon								
1.9 TiD	Z 19 DTH	110	06/2005 →		130	12	063377491010	**MAN7491**
1.9 TiD		88	06/2005 →		130	12	063377491010	**MAN7491**
SEAT								
131								
2.4 Diesel	8144.61	53	06/1982 → 12/1984		65	12	063321021010	**MAN354**
2.4 Diesel	8144.61	53	06/1982 → 12/1984		55	12	063321041010	**MAN284**
132								
1.6		72	09/1978 → 05/1979		55	12	063321011010	**MAN349**
1.8		77	05/1973 → 12/1979		55	12	063321011010	**MAN349**
ALHAMBRA (7V8, 7V9)								
1.8 T 20V	AJH, AWC	110	03/1999 → 02/2000		90	12	063533250010	**MAN2037**
1.9 TDI	1Z, AHU, ANU	66	06/2000 → 05/2005		90	12	063533250010	**MAN2037**
1.9 TDI	AFN, AVG	81	03/1999 → 02/2000		90	12	063533250010	**MAN2037**
1.9 TDI	AFN, AVG	81	05/1997 → 02/1999		120	12	063535150200	**MAN2024**
1.9 TDI	ASZ	96	11/2002 → 12/2002		90	12	063533250010	**MAN2037**
1.9 TDI	AUY, BVK	85	06/2000 → 03/2010		90	12	063533250010	**MAN2037**
1.9 TDI 4motion	AUY, BVK	85	06/2000 → 03/2010		90	12	063533250010	**MAN2037**
2.0 i	ADY, ATM	85	03/1999 → 02/2000		90	12	063533250130	**MAN2038**
AROSA (6H)								
1.0	AER, ALD, ALL, ANV, AUC	37	01/1999 → 07/2000		90	12	063533250130	**MAN2038**
1.4	AEX, AKK, AKV, ANW, APQ, AUD	44	01/1999 → 06/2004		90	12	063533250130	**MAN2038**
1.4 16V	AFK, AQQ, AUB	74	01/2000 → 06/2004		90	12	063533250130	**MAN2038**
CORDOBA								
1.0	ALD, ANV, AUC	37	05/1999 → 09/2002		90	12	063533250130	**MAN2038**
1.0	AST, AVZ	51	05/2000 → 09/2002		90	12	063533250130	**MAN2038**
1.4	AKK, ANW, AUD	44	05/1999 → 09/2002		90	12	063533250130	**MAN2038**
1.4	APE, AUA	55	09/1999 → 09/2002		90	12	063533250130	**MAN2038**
1.4	AQQ, AUB	74	02/2000 → 09/2002		90	12	063533250130	**MAN2038**
1.9 D	AGP, AQM	50	05/1999 → 08/2002		90	12	063533250010	**MAN2037**
1.9 D	AGR, ALH	66	05/1999 → 09/2002		90	12	063533250010	**MAN2037**
1.9 D	ASV	81	05/1999 → 09/2002		90	12	063533250010	**MAN2037**

		kW		i	A	V	MAGNETI MARELLI LONG	MAGNETI MARELLI SHORT
SEAT								
CORDOBA (6K2/C2)								
1.9 TDI	1Z, AHU	66	08/1996 → 06/1999		120	12	063535150200	**MAN2024**
1.9 SDI	AEY	47	08/1996 → 06/1999		120	12	063535150200	**MAN2024**
1.9 TDI	AFN	81	03/1997 → 06/1999		120	12	063535150200	**MAN2024**
CORDOBA (6L2)								
1.4 16V	AUB, BBZ	74	10/2002 → 11/2009	⊛	90	12	063533250130	**MAN2038**
1.4 16V	BBY, BKY	55	09/2002 → 04/2004	⊛	90	12	063533250130	**MAN2038**
1.4 16V	BXW	63	05/2006 → 11/2009	⊛	90	12	063533250130	**MAN2038**
1.6	BAH	74	04/2003 → 11/2009	⊛	90	12	063533250130	**MAN2038**
1.9 SDI	ASY	47	09/2002 → 12/2005		90	12	063533250010	**MAN2037**
1.9 TDI	ASZ, BLT	96	10/2002 →		90	12	063533250010	**MAN2037**
1.9 TDI	ATD, AXR, BMT	74	09/2002 →		90	12	063533250010	**MAN2037**
CORDOBA 2 volumi /Coda spiovente (6K2)								
1.0	ALD, ANV, AUC	37	06/1999 → 10/2002		90	12	063533250130	**MAN2038**
1.0 16V	AST, AVZ	51	05/2000 → 10/2002		90	12	063533250130	**MAN2038**
1.4	AKK, ANW, AUD	44	06/1999 → 10/2002		90	12	063533250130	**MAN2038**
1.4 16V	APE, AUA	55	05/2000 → 10/2002		90	12	063533250130	**MAN2038**
CORDOBA 2 volumi /Coda spiovente (6K2)								
1.4 16V	AQQ, AUB	74	02/2000 → 10/2002		90	12	063533250130	**MAN2038**
1.9 SDI	AGP, AQM	50	06/1999 → 08/2002		90	12	063533250010	**MAN2037**
1.9 TDI	AGR, ALH	66	06/1999 → 10/2002		90	12	063533250010	**MAN2037**
1.9 TDI	ASK, ASV	81	06/1999 → 10/2002		90	12	063533250010	**MAN2037**
1.9 TDI	ASK, ASV	81	06/1999 → 10/2002		120	12	063535150200	**MAN2024**
CORDOBA Vario (6K5)								
1.4	AKK, ANW, AUD	44	06/1999 → 12/2002		90	12	063533250130	**MAN2038**
1.4	AQQ, AUB	74	02/2000 → 07/2000		90	12	063533250130	**MAN2038**
1.4 16V	APE, AUA	55	06/1999 → 06/2000		90	12	063533250130	**MAN2038**
1.6	ALM	55	06/1999 → 08/2002		90	12	063533250130	**MAN2038**
1.9 SDI	AGP, AQM	50	06/1999 → 08/2002		90	12	063533250010	**MAN2037**
1.9 TDI	AGR, ALH	66	06/1999 → 08/2002		90	12	063533250010	**MAN2037**
1.9 TDI	AGR, ALH	66	06/1999 → 12/2002		120	12	063535150200	**MAN2024**
1.9 TDI	ASK, ASV	81	06/1999 → 08/2002		90	12	063533250010	**MAN2037**
1.9 TDI	ASK, ASV	81	06/1999 → 12/2002		120	12	063535150200	**MAN2024**
FURA (025A)								
0.9	09 NCA, 100 GL 7000	29	03/1984 → 10/1986		55	12	063341454010	**MAN1014**
0.9	HB 90	31	01/1982 → 06/1986		55	12	063341454010	**MAN1014**
IBIZA I (021A)								
0.9	146 A 000	32	08/1986 → 01/1993		55	12	063341454010	**MAN1014**
0.9	09 NCA, 146 A 000	29	08/1990 → 06/1991		55	12	063341454010	**MAN1014**
1.7 D	022 A.5000	40	01/1985 → 05/1993		55	12	063321011010	**MAN349**
1.7 D	022 A.5000	42	08/1990 → 05/1993		55	12	063321011010	**MAN349**

		kW			A	V	LONG	SHORT
SEAT								
IBIZA II (6K1)								
1.9 SDI	AEY	47	08/1996 → 08/1999		120	12	063535150200	**MAN2024**
1.9 TDI	1Z, AHU	66	08/1996 → 06/1999		120	12	063535150200	**MAN2024**
1.9 TDI	AFN	81	03/1997 → 06/1999		120	12	063535150200	**MAN2024**
IBIZA III (6K1)								
1.0	ALD, ANV, AUC	37	08/1999 → 02/2002		90	12	063533250130	**MAN2038**
1.0 16V	AST, AVZ	51	10/1999 → 02/2002		90	12	063533250130	**MAN2038**
1.4	AKK, ANW, AUD	44	08/1999 → 02/2002		90	12	063533250130	**MAN2038**
1.4 16V	APE, AUA	55	05/2000 → 02/2002		90	12	063533250130	**MAN2038**
1.4 16V	AQQ, AUB	74	08/1999 → 02/2002		90	12	063533250130	**MAN2038**
1.9 SDI	AGP, AQM	50	08/1999 → 02/2002		90	12	063533250010	**MAN2037**
1.9 TDI	AGR, ALH	66	08/1999 → 02/2002		90	12	063533250010	**MAN2037**
1.9 TDI	ASK, ASV	81	08/1999 → 02/2002		90	12	063533250010	**MAN2037**
IBIZA IV (6L1)								
1.4 16V	AUB, BBZ	74	04/2002 → 05/2002	⊛	90	12	063533250130	**MAN2038**
1.4 16V	BBY, BKY	55	04/2004 → 12/2007	⊛	90	12	063533250130	**MAN2038**
1.4 16V	BXW	63	05/2006 →	⊛	90	12	063533250130	**MAN2038**
1.6	BAH	74	04/2003 →	⊛	90	12	063533250130	**MAN2038**
1.9 SDI	ASY	47	02/2002 → 12/2005		90	12	063533250010	**MAN2037**
1.9 TDI	ASZ, BLT	96	02/2002 → 11/2009		90	12	063533250010	**MAN2037**
1.9 TDI	ATD, AXR, BMT	74	02/2002 → 11/2009		90	12	063533250010	**MAN2037**
IBIZA IV (6L1)								
1.9 TDI Cupra R	BPX, BUK	118	03/2004 → 11/2005		90	12	063533250010	**MAN2037**
IBIZA V (6J5)								
1.4	BXW, CGGB	63	03/2008 →	⊛	90	12	063533250130	**MAN2038**
1.9 TDI	BLS	77	03/2008 → 06/2010	⊛	90	12	063533250010	**MAN2037**
1.9 TDI	BXJ	66	07/2008 → 06/2010	⊛	90	12	063533250010	**MAN2037**
IBIZA V SPORTCOUPE (6J1)								
1.4	BXW, CGGB	63	07/2008 →	⊛	90	12	063533250130	**MAN2038**
1.9 TDI	BLS	77	07/2008 → 06/2010	⊛	90	12	063533250010	**MAN2037**
1.9 TDI	BXJ	66	07/2008 → 06/2010	⊛	90	12	063533250010	**MAN2037**
INCA (6K9)								
1.4 16V	AUA	55	09/2000 → 06/2003		90	12	063533250130	**MAN2038**
1.4 i	AEX, AKV, APQ, AUD	44	09/2000 → 06/2003		90	12	063533250130	**MAN2038**
1.7 D	AHB	42	09/1996 → 09/2000		120	12	063535150200	**MAN2024**
1.9 SDI	AEY, AYQ	47	09/2000 → 06/2003		90	12	063533250010	**MAN2037**
1.9 SDI	AEY, AYQ	47	12/1995 → 09/2000		120	12	063535150200	**MAN2024**
LEON (1M1)								
1.9 SDI	AQM	50	12/1999 → 10/2003		90	12	063533250010	**MAN2037**
1.9 TDI	AGR, ALH	66	11/1999 → 07/2004		90	12	063533250010	**MAN2037**
1.9 TDI	AHF, ASV	81	11/1999 → 07/2004		90	12	063533250010	**MAN2037**
1.9 TDI	ARL	110	02/2001 → 07/2004		90	12	063533250010	**MAN2037**
1.9 TDI	ASZ	96	05/2003 → 06/2006		90	12	063533250010	**MAN2037**
1.9 TDI Syncro	ARL	110	05/2002 → 07/2004		90	12	063533250010	**MAN2037**
2.8	BDE	150	05/2002 → 04/2004		90	12	063533250010	**MAN2037**
2.8 Cupra 4	AUE	150	02/2001 → 07/2001		90	12	063533250010	**MAN2037**

		kW		i	A	V	LONG	SHORT
SEAT								
MALAGA (023A)								
1.7 D	022 A.5000	40	05/1985 → 12/1993		55	12	063321011010	**MAN349**
MARBELLA (28)								
0.8	08 NCA	25	08/1986 → 12/1993		55	12	063341454010	**MAN1014**
0.9	09 NCA, 100 GL 7000	29	01/1987 → 12/1993		55	12	063341454010	**MAN1014**
0.9 Cat.	08 NCB	30	11/1996 → 10/1998		55	12	063341454010	**MAN1014**
0.9 Cat.	09 NCB, 100 GL 7000	29	01/1990 → 11/1996		55	12	063341454010	**MAN1014**
MARBELLA Furgonato (028A)								
0.8	08 NCA	25	01/1987 → 12/1993		55	12	063341454010	**MAN1014**
0.9	09 NCA	29	01/1987 → 12/1993		55	12	063341454010	**MAN1014**
0.9 Cat.	09 NCB	29	01/1987 → 12/1993		55	12	063341454010	**MAN1014**
PANDA (141A)								
0.9	100 GL 3000	31	09/1982 → 11/1982		55	12	063341454010	**MAN1014**
RITMO (138)								
1.7 D	022 A.5000	41	09/1980 → 05/1982		55	12	063321011010	**MAN349**
RONDA (022A)								
1.7 Diesel	022 A.5000	41	01/1985 → 12/1986		55	12	063321011010	**MAN349**
1.7 Diesel	022 A.5000	40	01/1985 → 12/1986		55	12	063321011010	**MAN349**
TERRA (24)								
0.9	09 NCA	29	02/1987 → 12/1995		55	12	063341454010	**MAN1014**
TERRA (24)								
0.9 Cat.	09 NCB	29	02/1992 → 12/1994		55	12	063341454010	**MAN1014**
TERRA Furgonato (024A)								
0.9	09 NCA	29	01/1987 → 12/1995		55	12	063341454010	**MAN1014**
0.9 Cat.	09 NCB	29	01/1990 → 12/1995		55	12	063341454010	**MAN1014**
TOLEDO I (1L)								
1.6 i	1F, ABN, EZ	54	01/1992 → 10/1993		65	12	063534893700	**MAN2018**
1.6 i	1F	52	05/1991 → 10/1993		65	12	063534893700	**MAN2018**
1.6 i	1F	55	01/1993 → 10/1993		65	12	063534893700	**MAN2018**
1.8 i	RP	65	05/1991 → 11/1993		65	12	063534893700	**MAN2018**
1.9 TDI	1Z, AHU	66	08/1995 → 03/1999		120	12	063535150200	**MAN2024**
1.9 TDI	AFN	81	11/1996 → 03/1999		120	12	063535150200	**MAN2024**
2.0 i	2E, AGG	85	05/1991 → 10/1993		65	12	063534893700	**MAN2018**
TOLEDO II (1M2)								
1.9 TDI	AGR, ALH	66	04/1999 → 07/2004		90	12	063533250010	**MAN2037**
1.9 TDI	AHF, ASV	81	04/1999 → 12/2003		90	12	063533250010	**MAN2037**
1.9 TDI	ARL	110	10/2000 → 05/2002		90	12	063533250010	**MAN2037**
1.9 TDI	ASZ	96	05/2003 → 07/2004		90	12	063533250010	**MAN2037**
2.3 V5	AGZ	110	04/1999 → 11/2000		90	12	063533250010	**MAN2037**
2.3 V5 20V	AQN	125	05/2001 → 11/2003		90	12	063533250010	**MAN2037**
SKODA								
FABIA								
1.4	BXW, CGGB	63	01/2007 →	⊛	90	12	063533250130	**MAN2038**
1.9 TDI	BLS, BSW	77	04/2007 → 03/2010		90	12	063533250010	**MAN2037**

		kW		i	A	V	LONG	SHORT
SKODA								
FABIA (6Y2)								
1.0	AQV, ARV	37	12/1999 → 08/2002		90	12	063533250130	**MAN2038**
1.4	AME, AQW, ATZ	50	09/1999 → 05/2003		90	12	063533250130	**MAN2038**
1.4	AZE, AZF	44	08/2000 → 08/2002		90	12	063533250130	**MAN2038**
1.4 16V	AUA, BBY, BKY	55	10/2001 → 05/2004	⊛	90	12	063533250130	**MAN2038**
1.4 16V	AUB, BBZ	74	10/2001 → 04/2007	⊛	90	12	063533250130	**MAN2038**
1.9 SDI	ASY	47	12/1999 → 04/2007		90	12	063533250010	**MAN2037**
1.9 TDI	ATD, AXR	74	01/2000 → 04/2007		90	12	063533250010	**MAN2037**
1.9 TDI RS	ASZ, BLT	96	06/2003 → 04/2007		90	12	063533250010	**MAN2037**
FABIA Combi								
1.4	BXW, CGGB	63	10/2007 →	⊛	90	12	063533250130	**MAN2038**
1.9 TDI	BLS, BSW	77	10/2007 → 03/2010		90	12	063533250010	**MAN2037**
FABIA Combi (6Y5)								
1.4	AME, AQW, ATZ	50	04/2000 → 05/2003		90	12	063533250130	**MAN2038**
1.4	AZE, AZF	44	09/2000 → 03/2003		90	12	063533250130	**MAN2038**
1.4 16V	AUA, BBY, BKY	55	10/2001 → 12/2007	⊛	90	12	063533250130	**MAN2038**
1.4 16V	AUB, BBZ	74	10/2001 → 12/2007	⊛	90	12	063533250130	**MAN2038**
1.9 SDI	ASY	47	08/2000 → 12/2007		90	12	063533250010	**MAN2037**
1.9 TDI	ATD, AXR	74	08/2000 → 12/2007		90	12	063533250010	**MAN2037**
FABIA Praktik								
1.4	AME, AQW, ATZ	50	07/2001 → 05/2003		90	12	063533250130	**MAN2038**
1.9 SDI	ASY	47	07/2001 → 12/2007		90	12	063533250010	**MAN2037**
FABIA Tre volumi (6Y3)								
1.4	AME, AQW	50	07/2001 → 05/2003		90	12	063533250130	**MAN2038**
1.4	AZE, AZF	44	04/2000 → 08/2002		90	12	063533250130	**MAN2038**
1.4 16V	AUA, BBY, BKY	55	10/2001 → 12/2007	⊛	90	12	063533250130	**MAN2038**
1.4 16V	AUB, BBZ	74	10/2001 → 12/2007	⊛	90	12	063533250130	**MAN2038**
1.9 SDI	ASY	47	11/1999 → 12/2007		90	12	063533250010	**MAN2037**
1.9 TDI	ATD, AXR	74	01/2000 → 12/2007		90	12	063533250010	**MAN2037**
OCTAVIA (1U2)								
1.9 SDI	AGP, AQM	50	06/1998 → 12/2003		90	12	063533250010	**MAN2037**
1.9 TDI	AGR, ALH	66	09/1996 → 03/2010		90	12	063533250010	**MAN2037**
1.9 TDI	AHF, ASV	81	08/1997 → 01/2006		90	12	063533250010	**MAN2037**
1.9 TDI	ASZ	96	01/2003 → 09/2004		90	12	063533250010	**MAN2037**
OCTAVIA Combi (1U5)								
1.9 SDI	AGP, AQM	50	07/1998 → 12/2003		90	12	063533250010	**MAN2037**
1.9 TDI	AGR, ALH	66	07/1998 → 03/2010		90	12	063533250010	**MAN2037**
1.9 TDI	AHF, ASV	81	07/1998 → 01/2006		90	12	063533250010	**MAN2037**
1.9 TDI	ASZ	96	01/2003 → 09/2004		90	12	063533250010	**MAN2037**
1.9 TDI	ATD, AXR	74	08/2000 → 09/2004		90	12	063533250010	**MAN2037**
1.9 TDI 4x4	AGR	66	08/2000 → 09/2000		90	12	063533250010	**MAN2037**
1.9 TDI 4x4	ATD	74	09/2000 → 01/2006		90	12	063533250010	**MAN2037**
ROOMSTER (5J)								
1.4	BXW, CGGB	63	09/2006 →	⊛	90	12	063533250130	**MAN2038**
1.9 TDI	AXR	74	03/2006 → 05/2006		90	12	063533250010	**MAN2037**
1.9 TDI	BLS, BSW	77	09/2006 → 03/2010		90	12	063533250010	**MAN2037**

		kW		i	A	V	MAGNETI MARELLI LONG	MAGNETI MARELLI SHORT
SMART								
CABRIO								
0.6		52	06/2002 → 01/2004		75	12	063341658010	**MAN1009**
0.6		52	06/2002 → 01/2004		65	12	063341702010	**MAN1008**
0.6 (S1OLA1)	M 160 E6AL B03	40	03/2000 → 01/2004		75	12	063341658010	**MAN1009**
0.6 (S1OLA1)	M 160 E6AL B03	40	03/2000 → 01/2004		65	12	063341702010	**MAN1008**
0.6 (S1OLD2)	M 160 E6AL B05	45	01/2001 → 01/2004		75	12	063341658010	**MAN1009**
0.6 (S1OLD2)	M 160 E6AL B05	45	01/2001 → 01/2004		65	12	063341702010	**MAN1008**
0.7		55	01/2003 → 01/2004		75	12	063341658010	**MAN1009**
0.7		45	01/2003 → 01/2004		75	12	063341658010	**MAN1009**
0.8 CDI (S1OLC1)	OM 660 DE 8LA	30	03/2001 → 01/2004		75	12	063341658010	**MAN1009**
0.8 CDI (S1OLC1)	OM 660 DE 8LA	30	03/2001 → 01/2004		65	12	063341702010	**MAN1008**
0.8 CDI (S1OLC1)	OM 660 DE 8LA	30	03/2001 → 01/2004		75	12	063341896010	**MAN1170**
0.8 CDI (S1OLC1)	OM 660 DE 8LA	30	03/2001 → 01/2004		85	12	063532250200	**MAN2027**
CITY-COUPE (MC01)								
0.6		52	06/2002 → 01/2004		75	12	063341658010	**MAN1009**
0.6	M 160 E6AL B05	45	01/2001 → 01/2004		75	12	063341658010	**MAN1009**
0.6 (S1CLA1)	M 160 E6AL B03	40	01/2000 → 01/2004		75	12	063341658010	**MAN1009**
0.6 (S1CLA1)	M 160 E6AL B03	40	07/1998 → 12/2000		75	12	063341896010	**MAN1170**
0.6 (S1CLB1)	M 160 E6AL B04	33	01/2000 → 01/2004		75	12	063341658010	**MAN1009**
0.6 (S1CLB1)	M 160 E6AL B04	33	07/1998 → 12/2000		75	12	063341896010	**MAN1170**
0.8 CDI (S1CLC1)	OM 660 DE 8LA	30	11/1999 → 01/2004		65	12	063341702010	**MAN1008**
0.8 CDI (S1CLC1)	OM 660 DE 8LA	30	11/1999 → 01/2004		75	12	063341896010	**MAN1170**
0.8 CDI (S1CLC1)	OM 660 DE 8LA	30	11/1999 → 01/2004		85	12	063532250200	**MAN2027**
FORTWO Cabrio								
0.7 (450.432)		45	01/2004 →		75	12	063341658010	**MAN1009**
0.7 (450.433)		55	01/2004 →		75	12	063341658010	**MAN1009**
0.8 CDI (450.400)	OM 660 DE 8LA	30	01/2004 →		75	12	063341658010	**MAN1009**
0.8 CDI (450.400)	OM 660 DE 8LA	30	01/2004 →		65	12	063341702010	**MAN1008**
0.8 CDI (450.400)	OM 660 DE 8LA	30	02/2004 → 03/2007		85	12	063532250200	**MAN2027**
FORTWO Coupe								
0.8 CDI (450.300)	OM 660 DE 8LA	30	01/2004 →		65	12	063341702010	**MAN1008**
0.8 CDI (450.300)	OM 660 DE 8LA	30	01/2004 →		75	12	063341896010	**MAN1170**
0.8 CDI (450.300)	OM 660 DE 8LA	30	02/2004 → 03/2007		85	12	063532250200	**MAN2027**
0.8 CDi (451.300)	OM 660.950	33	01/2007 → 03/2007		85	12	063532250200	**MAN2027**
ROADSTER								
0.7 (452.432)		45	04/2003 →		75	12	063341658010	**MAN1009**
0.7 (452.434)		60	04/2003 →		75	12	063341658010	**MAN1009**
0.7 Brabus (452.437)		74	12/2003 →		75	12	063341658010	**MAN1009**
ROADSTER Coupe								
0.7 (452.334)		60	04/2003 →		75	12	063341658010	**MAN1009**
0.7 Brabus (452.337)		74	12/2003 →		75	12	063341658010	**MAN1009**

		kW			A	V	LONG	SHORT
SUZUKI								
IGNIS II								
1.3 DDiS	Z13DT	51	10/2003 → 12/2007		90	12	063358061010	**MAN1097**
SPLASH								
1.3 CDTI	D13A, Z 13 DTJ	55	01/2008 →		90	12	063358061010	**MAN1097**
SWIFT III (SG)								
1.3 DDiS	D13A, Z 13 DTJ	55	02/2008 →		90	12	063358061010	**MAN1097**
1.3 DDiS	Z13DT	51	08/2005 →		90	12	063358061010	**MAN1097**
WAGON R+ (MM)								
1.3 DDiS	Z13DT	51	09/2003 → 03/2006		90	12	063358061010	**MAN1097**
TOYOTA								
AVENSIS (_T22_)								
2.0 D-4D (CDT220_)	1CD-FTV	81	10/1999 → 08/2002		120	12	063377427010	**MAN7427**
2.0 VVT-i	1AZ-FSE	110	10/2000 → 02/2003		90	12	063377433010	**MAN7433**
AVENSIS Liftback (_T22_)								
2.0 D-4D (CDT220_)	1CD-FTV	81	10/1999 → 02/2003		120	12	063377427010	**MAN7427**
2.0 VVT-i	1AZ-FSE	110	10/2000 → 02/2003		90	12	063377433010	**MAN7433**
AVENSIS Station Wagon (_T22_)								
1.9 D	1CD-FTV	85	09/2002 → 02/2003		120	12	063377427010	**MAN7427**
2.0 D-4D (CDT220_)	1CD-FTV	81	10/1999 → 08/2002		120	12	063377427010	**MAN7427**
2.0 VVT-i	1AZ-FSE	110	10/2000 → 02/2003		90	12	063377433010	**MAN7433**
AVENSIS VERSO (_ACM2_)								
2.0 VVT-i	1AZ-FE	110	11/2003 →		100	12	063377435010	**MAN7435**
AYGO (B10)								
1.4 HDi (WNB10)	2WZ-TV	40	07/2005 →		90	12	063321734010	**MAN963**
CELICA (ZZT23_)								
1.8 16V TS (ZZT231_)	2ZZ-GE	141	08/2000 →		80	12	063377430010	**MAN7430**
1.8 16V VT-i (ZZT230_)	1ZZ-FE	105	11/1999 →		80	12	063377428010	**MAN7428**
COROLLA (_E11_)								
2.0 D-4D	1CD-FTV	66	09/2000 → 01/2002		120	12	063377427010	**MAN7427**
COROLLA (_E12U_, _E12J_)								
1.4 VVT-i	4ZZ-FE	71	01/2002 →		80	12	063377428010	**MAN7428**
1.4 VVT-i	4ZZ-FE	71	09/2002 →		70	12	063377429010	**MAN7429**
1.6 VVT-i	3ZZ-FE	81	01/2002 →		80	12	063377428010	**MAN7428**
1.6 VVT-i	3ZZ-FE	81	09/2002 →		70	12	063377429010	**MAN7429**
COROLLA Compact (_E11_)								
2.0 D-4D	1CD-FTV	66	09/2000 → 01/2002		120	12	063377427010	**MAN7427**
COROLLA Station wagon (_E12J_, _E12T_)								
1.4 VVT-i	4ZZ-FE	71	01/2002 →		80	12	063377428010	**MAN7428**
1.4 VVT-i	4ZZ-FE	71	01/2002 →		70	12	063377429010	**MAN7429**
1.6 VVT-i	3ZZ-FE	81	01/2002 →		80	12	063377428010	**MAN7428**
1.6 VVT-i	3ZZ-FE	81	01/2002 →		70	12	063377429010	**MAN7429**
COROLLA Tre volumi (_E12J_, _E12T_)								
1.4 VVT-i	4ZZ-FE	71	08/2002 →		80	12	063377428010	**MAN7428**
1.4 VVT-i	4ZZ-FE	71	08/2002 →		70	12	063377429010	**MAN7429**
1.6 VVT-i	3ZZ-FE	81	08/2002 →		80	12	063377428010	**MAN7428**
1.6 VVT-i	3ZZ-FE	81	08/2002 →		70	12	063377429010	**MAN7429**

		kW		i	A	V	LONG	SHORT
TOYOTA								
COROLLA Verso (_E12J_)								
1.4 VVT-i	4ZZ-FE	71	01/2002 → 05/2004		70	12	063377429010	**MAN7429**
1.6 VVT-i	3ZZ-FE	81	01/2002 → 01/2004		80	12	063377431010	**MAN7431**
1.8 VVT-i	1ZZ-FE	99	01/2002 → 01/2004		80	12	063377431010	**MAN7431**
COROLLA Wagon (__E11_)								
1.4 (EE111_)	4E-FE	63	05/1997 → 09/1999		120	12	063377427010	**MAN7427**
2.0 D-4D	1CD-FTV	66	09/2000 → 01/2002		120	12	063377427010	**MAN7427**
2.0 D4d GS	1CD-FTV	81	08/2000 → 10/2001		120	12	063377427010	**MAN7427**
MR 2 II (_W2_)								
2.0 16V (SW20)	3S-GE	115	12/1989 → 11/1993		70	12	063377439010	**MAN7439**
MR 2 III (_W3_)								
1.8 16V VT-i (ZZW30)	1ZZ-FE	103	04/2000 →		80	12	063377431010	**MAN7431**
PREVIA (CLR3_, ACR3_)								
2.4 16V	2AZ-FE	115	04/2004 →		100	12	063377435010	**MAN7435**
RAV 4 I (SXA1_)								
2.0 16V	3S-FE	95	11/1995 → 09/1997		80	12	063377436010	**MAN7436**
2.0 16V	3S-FE	95	10/1997 → 06/2000		80	12	063377437010	**MAN7437**
RAV 4 II (XA2)								
1.8 VVTi	1ZZ-FE	92	02/2001 →		90	12	063377432010	**MAN7432**
RAV 4 II (XA2)								
2.0 VVTi 4WD	1AZ-FE	110	06/2000 →		90	12	063377434010	**MAN7434**
2.4 VVTi 4x4	2AZ-FE	112	08/2003 → 10/2005		90	12	063377434010	**MAN7434**
2.4 VVTi 4x4	2AZ-FE	112	08/2003 → 10/2005		100	12	063377435010	**MAN7435**
YARIS (_P1_)								
1.0 16V	1SZ-FE	48	04/2003 →		70	12	063377439010	**MAN7439**
1.0 16V	1SZ-FE	48	04/2003 →		90	12	063377440010	**MAN7440**
1.0 16V	1SZ-FE	48	04/2003 →		70	12	063377441010	**MAN7441**
1.0 16V (SCP10_)	1SZ-FE	50	04/1999 →		70	12	063377439010	**MAN7439**
1.0 16V (SCP10_)	1SZ-FE	50	04/1999 →		90	12	063377440010	**MAN7440**
1.0 16V (SCP10_)	1SZ-FE	50	04/1999 →		70	12	063377441010	**MAN7441**
1.3	2SZ-FE	64	05/2002 →		70	12	063377439010	**MAN7439**
1.3 16V (NCP10_)	2NZ-FE	63	06/2003 →		70	12	063377442010	**MAN7442**
1.5 TS (NCP13)	1NZ-FE	77	04/2003 →		80	12	063377438010	**MAN7438**
1.5 VVT-i TS		110	05/2003 → 10/2004		80	12	063377438010	**MAN7438**
1.5 VVT-i TS	1NZ-FE	78	04/2001 →		80	12	063377438010	**MAN7438**
YARIS VERSO (NC/LP2_)								
1.3 (NCP22)	2NZ-FE	63	11/1999 →		70	12	063377442010	**MAN7442**
1.3 (NCP22)	2NZ-FE	62	04/2003 →		70	12	063377442010	**MAN7442**
1.5 (NCP21)	1NZ-FE	78	03/2000 →		80	12	063377438010	**MAN7438**
1.5 (NCP21)	1NZ-FE	77	05/2003 →		80	12	063377438010	**MAN7438**

		kW			A	V	LONG	SHORT
UAZ								
PATRIOT								
2.3 D		85	01/2007 →		110	12	063533250530	**MAN2039**
2.3 D		85	01/2007 →		140	12	063535250200	**MAN2031**
VAUXHALL								
AGILA Mk I (A)								
1.0 12V	Z 10 XE	43	09/2000 → 08/2003		70	12	063532250220	**MAN2036**
1.0 12V	Z 10 XEP	44	08/2003 → 02/2008		70	12	063532250220	**MAN2036**
1.2 16V	Z 12 XE	55	09/2000 → 06/2004		70	12	063532250220	**MAN2036**
1.2 16V Twinport	Z 12 XEP	59	07/2004 → 02/2008		70	12	063532250220	**MAN2036**
AGILA Mk II (B)								
1.3 CDTI	Z 13 DTJ	55	01/2008 →		70	12	063377423010	**MAN7423**
1.3 CDTI	Z 13 DTJ	55	01/2008 →		105	12	063377424010	**MAN7424**
1.3 CDTI	Z 13 DTJ	55	01/2008 →		120	12	063377425010	**MAN7425**
ASTRA Mk II 2 volumi /Coda spiovente								
1.3	13 S	44	09/1988 → 08/1991		55	12	063534881590	**MAN2012**
ASTRA Mk III (F)								
1.4 i	C 14 NZ	44	04/1992 → 09/1998		100	12	063533479010	**MAN2801**
1.4 i	C 14 NZ	44	09/1991 → 02/1998		55	12	063534881590	**MAN2012**
1.4 i	C 14 SE	60	04/1992 → 09/1998		100	12	063533479010	**MAN2801**
1.4 i 16V	X 14 XE	66	02/1996 → 09/1998		100	12	063533479010	**MAN2801**
1.6 i	C 16 NZ, X 16 SZR	55	03/1992 → 09/1998		100	12	063533479010	**MAN2801**
1.6 i	C 16 SE	74	05/1992 → 12/1994		100	12	063533479010	**MAN2801**
1.6 i	X 16 SZ	52	08/1994 → 07/1996		100	12	063533479010	**MAN2801**
1.6 i 16V	X 16 XEL	74	08/1994 → 09/1998		100	12	063533479010	**MAN2801**
1.8 i	C 18 NZ	66	03/1992 → 09/1998		100	12	063533479010	**MAN2801**
1.8 i 16V	C 18 XE	92	06/1993 → 10/1994		100	12	063533479010	**MAN2801**
1.8 i 16V	C 18 XEL	85	01/1994 → 12/1996		100	12	063533479010	**MAN2801**
2.0 i	C 20 NE	85	03/1992 → 09/1998		100	12	063533479010	**MAN2801**
2.0 i 16V	X 20 XEV	100	02/1995 → 09/1998		100	12	063533479010	**MAN2801**
ASTRA Mk III (F) 2 volumi /Coda spiovente								
1.4 i	C 14 NZ	44	09/1991 → 02/1998		100	12	063533479010	**MAN2801**
1.4 i	C 14 NZ	44	09/1991 → 02/1998		55	12	063534881590	**MAN2012**
1.4 i	C 14 SE	60	03/1992 → 02/1998		100	12	063533479010	**MAN2801**
1.4 i 16V	X 14 XE	66	02/1996 → 02/1998		100	12	063533479010	**MAN2801**
1.4 S	14 NV	55	09/1991 → 02/1998		100	12	063533479010	**MAN2801**
1.4 S	14 NV	55	09/1991 → 02/1998		55	12	063534881590	**MAN2012**
1.6 i	C 16 SE	74	03/1992 → 02/1998		100	12	063533479010	**MAN2801**
1.6 i	C 16 NZ, E 16 NZ	55	09/1991 → 02/1998		100	12	063533479010	**MAN2801**
1.6 i	X 16 SZ	52	07/1994 → 02/1998		100	12	063533479010	**MAN2801**
1.6 i 16V	X 16 XEL	74	01/1994 → 02/1998		100	12	063533479010	**MAN2801**
1.8 i	C 18 NZ	66	09/1991 → 02/1998		100	12	063533479010	**MAN2801**
1.8 i 16V	C 18 XE	92	09/1994 → 02/1998		100	12	063533479010	**MAN2801**
1.8 i 16V	C 18 XEL	85	09/1994 → 02/1998		100	12	063533479010	**MAN2801**

		kW		i	A	V	MAGNETI MARELLI LONG	MAGNETI MARELLI SHORT
VAUXHALL								
ASTRA Mk III (F) 2 volumi /Coda spiovente								
2.0 i	C 20 NE	85	09/1991 → 02/1998		100	12	063533479010	**MAN2801**
2.0 i 16V	C 20 XE	110	09/1991 → 02/1998		100	12	063533479010	**MAN2801**
2.0 i 16V	X 20 XEV	100	01/1994 → 02/1998		100	12	063533479010	**MAN2801**
ASTRA Mk III (F) Cabriolet								
1.4 i	C 14 SE	60	05/1993 → 03/2001		100	12	063533479010	**MAN2801**
1.4 i 16V	X 14 XE	66	01/1996 → 03/2001		100	12	063533479010	**MAN2801**
1.6 i	X 16 SZ	52	03/1993 → 08/1996		100	12	063533479010	**MAN2801**
1.6 i	X 16 SZR	55	01/1996 → 03/2001		100	12	063533479010	**MAN2801**
1.8 16V	C 18 XEL, X 18 XE	85	11/1994 → 03/2001		100	12	063533479010	**MAN2801**
2.0 i	C 20 NE	85	03/1993 → 10/1994		100	12	063533479010	**MAN2801**
ASTRA Mk III (F) Station wagon								
1.4 i	C 14 NZ	44	09/1991 → 02/1998		100	12	063533479010	**MAN2801**
1.4 i	C 14 NZ	44	09/1991 → 02/1998		55	12	063534881590	**MAN2012**
1.4 i	C 14 SE	60	03/1991 → 02/1998		100	12	063533479010	**MAN2801**
1.4 i 16V	X 14 XE	66	02/1996 → 01/1998		100	12	063533479010	**MAN2801**
1.4 S	14 NV	55	09/1991 → 02/1998		100	12	063533479010	**MAN2801**
1.4 S	14 NV	55	09/1991 → 09/1993		55	12	063534881590	**MAN2012**
1.6 i	C 16 NZ, E 16 NZ	55	09/1991 → 02/1998		100	12	063533479010	**MAN2801**
1.6 i	X 16 SZ	52	07/1994 → 02/1998		100	12	063533479010	**MAN2801**
1.6 i 16V	X 16 XEL	74	01/1994 → 02/1998		100	12	063533479010	**MAN2801**
1.6 Si	C 16 SE	74	03/1991 → 12/1994		100	12	063533479010	**MAN2801**
1.8 i	C 18 NZ	66	09/1991 → 02/1998		100	12	063533479010	**MAN2801**
1.8 i 16V	C 18 XE	92	09/1994 → 02/1998		100	12	063533479010	**MAN2801**
1.8 i 16V	C 18 XEL	85	09/1994 → 02/1998		100	12	063533479010	**MAN2801**
2.0 i	C 20 NE	85	09/1991 → 02/1998		100	12	063533479010	**MAN2801**
2.0 i 16V	X 20 XEV	100	01/1994 → 02/1998		100	12	063533479010	**MAN2801**
ASTRA Mk IV (G)								
1.2 16V	X 12 XE	48	09/1998 → 08/2000		70	12	063532250220	**MAN2036**
1.2 16V	Z 12 XE	55	09/2000 → 08/2005		70	12	063532250220	**MAN2036**
ASTRA Mk IV (G) 2 volumi /Coda spiovente								
1.2 16V	X 12 XE	48	02/1998 → 08/2000		70	12	063532250220	**MAN2036**
1.2 16V	Z 12 XE	55	09/2000 → 08/2005		70	12	063532250220	**MAN2036**
ASTRA Mk IV (G) Station wagon								
1.2 16V	X 12 XE	48	02/1998 → 08/2000		70	12	063532250220	**MAN2036**
1.2 16V	Z 12 XE	55	09/2000 → 08/2005		70	12	063532250220	**MAN2036**
ASTRA Mk V (H) 2 volumi /Coda spiovente								
1.2	Z 12 XEP	59	08/2005 →		90	12	063358061010	**MAN1097**
1.3 CDTI	Z 13 DTH	66	01/2006 → 05/2009		90	12	063358061010	**MAN1097**
1.3 CDTI	Z 13 DTH	66	01/2006 → 05/2009		75	12	063358062010	**MAN1098**
1.3 CDTI	Z 13 DTH	66	10/2005 → 05/2009		105	12	063377494010	**MAN7494**
1.4	Z 14 XEP	66	01/2004 → 05/2009		90	12	063358061010	**MAN1097**
1.9 CDTI	Z 19 DT	88	11/2006 → 05/2009		120	12	063377490010	**MAN7490**
1.9 CDTI	Z 19 DT	88	01/2004 → 05/2009		130	12	063377491010	**MAN7491**
1.9 CDTI	Z 19 DT	88	01/2004 → 05/2009		105	12	063377492010	**MAN7492**

		kW			A	V	LONG	SHORT
VAUXHALL								
ASTRA Mk V (H) 2 volumi /Coda spiovente								
1.9 CDTI	Z 19 DTH	110	03/2005 → 05/2009		130	12	063377491010	**MAN7491**
1.9 CDTI	Z 19 DTH	110	03/2005 → 05/2009		105	12	063377492010	**MAN7492**
1.9 CDTI	Z 19 DTJ	88	11/2006 → 05/2009		120	12	063377490010	**MAN7490**
1.9 CDTI	Z 19 DTJ	88	08/2005 → 05/2009		130	12	063377491010	**MAN7491**
1.9 CDTI	Z 19 DTJ	88	08/2005 → 05/2009		105	12	063377492010	**MAN7492**
ASTRA Mk V (H) Sport Hatch								
1.3 CDTi	Z 13 DTH	66	01/2006 → 03/2010		90	12	063358061010	**MAN1097**
1.3 CDTi	Z 13 DTH	66	01/2006 → 03/2010		75	12	063358062010	**MAN1098**
1.3 CDTi	Z 13 DTH	66	04/2005 →		105	12	063377494010	**MAN7494**
1.4 i 16V	Z 14 XEP	66	03/2005 →		105	12	063377494010	**MAN7494**
1.9 CDTi	Z 19 DT	88	11/2006 →		120	12	063377490010	**MAN7490**
1.9 CDTi	Z 19 DT	88	08/2005 →		130	12	063377491010	**MAN7491**
1.9 CDTi	Z 19 DT	88	08/2005 →		105	12	063377492010	**MAN7492**
1.9 CDTi	Z 19 DTH	110	03/2005 →		130	12	063377491010	**MAN7491**
1.9 CDTi	Z 19 DTH	110	03/2005 →		105	12	063377492010	**MAN7492**
1.9 CDTi	Z 19 DTL	74	08/2005 →		130	12	063377491010	**MAN7491**
ASTRA Mk V (H) Station wagon								
1.2	Z 12 XEP	59	08/2005 →		90	12	063358061010	**MAN1097**
1.3 CDTi	Z 13 DTH	66	06/2005 → 03/2009		90	12	063358061010	**MAN1097**
1.3 CDTi	Z 13 DTH	66	06/2005 → 03/2009		75	12	063358062010	**MAN1098**
1.3 CDTi	Z 13 DTH	66	08/2005 → 03/2009		105	12	063377494010	**MAN7494**
1.4	Z 14 XEP	66	08/2004 → 03/2009		90	12	063358061010	**MAN1097**
1.9 CDTi	Z 19 DT	88	11/2006 → 03/2009		120	12	063377490010	**MAN7490**
1.9 CDTi	Z 19 DT	88	11/2006 → 03/2009		120	12	063377490010	**MAN7490**
1.9 CDTi	Z 19 DT	88	11/2005 → 03/2009		130	12	063377491010	**MAN7491**
1.9 CDTi	Z 19 DT	88	11/2005 → 03/2009		130	12	063377491010	**MAN7491**
1.9 CDTi	Z 19 DT	88	11/2005 → 03/2009		105	12	063377492010	**MAN7492**
1.9 CDTi	Z 19 DT	88	11/2005 → 03/2009		105	12	063377492010	**MAN7492**
1.9 CDTi	Z 19 DTH	110	11/2005 → 03/2009		130	12	063377491010	**MAN7491**
1.9 CDTi	Z 19 DTH	110	11/2005 → 03/2009		105	12	063377492010	**MAN7492**
ASTRA TwinTop Mk V (H)								
1.9 CDTi	Z 19 DTH	110	01/2006 →		130	12	063377491010	**MAN7491**
ASTRAVAN Mk III (F)								
1.4 i	C 14 NZ	44	01/1991 → 10/1994		100	12	063533479010	**MAN2801**
1.4 i	C 14 NZ	44	01/1991 → 10/1994		55	12	063534881590	**MAN2012**
1.6 i	C 16 NZ	55	01/1991 → 08/1998		100	12	063533479010	**MAN2801**
1.6 i	X 16 SZ	52	02/1994 → 10/1996		100	12	063533479010	**MAN2801**
ASTRAVAN Mk V (H)								
1.3 CDTi	Z 13 DTH	66	08/2005 → 03/2010		90	12	063358061010	**MAN1097**
1.3 CDTi	Z 13 DTH	66	08/2005 → 03/2010		75	12	063358062010	**MAN1098**
1.3 CDTi	Z 13 DTH	66	08/2005 →		105	12	063377494010	**MAN7494**
1.4 i	Z 14 XEP	66	03/2005 →		90	12	063358061010	**MAN1097**

		kW		i	A	V	MAGNETI MARELLI LONG	MAGNETI MARELLI SHORT
VAUXHALL								
CAVALIER Mk III (87)								
1.4 S	14 NV	55	09/1988 → 11/1995		55	12	063534881590	**MAN2012**
1.6 i	E 16 NZ	55	09/1988 → 11/1995		55	12	063534881590	**MAN2012**
1.6 i	X 16 SZ	52	09/1994 → 11/1995		55	12	063534881590	**MAN2012**
1.8	18 SV, C 18 NZ	66	09/1988 → 08/1995		100	12	063533479010	**MAN2801**
1.8 i Cat.	C 18 NZ	66	03/1990 → 11/1995		100	12	063533479010	**MAN2801**
2.0 i	20 NE	85	09/1988 → 10/1990		100	12	063533479010	**MAN2801**
2.0 i 16V	C 20 XE	110	09/1988 → 11/1995		100	12	063533479010	**MAN2801**
2.0 i 16V 4x4	C 20 XE	110	09/1988 → 11/1995		100	12	063533479010	**MAN2801**
2.0 i 4x4	20 NE	85	01/1991 → 10/1992		100	12	063533479010	**MAN2801**
2.0 i 4x4	20 SEH	95	09/1988 → 09/1992		100	12	063533479010	**MAN2801**
2.0 i Cat.	C 20 NE	85	09/1990 → 11/1995		100	12	063533479010	**MAN2801**
2.0 i Turbo 4x4	C 20 LET	150	06/1992 → 11/1994		100	12	063533479010	**MAN2801**
2.0 SRi	20 SEH	95	09/1988 → 09/1992		100	12	063533479010	**MAN2801**
2.0 SRi 16V	X 20 XEV	100	09/1993 → 11/1995		100	12	063533479010	**MAN2801**
CAVALIER Mk III 2 volumi /Coda spiovente								
1.4 S	14 NV	55	09/1988 → 11/1995		55	12	063534881590	**MAN2012**
1.6 i	E 16 NZ	55	09/1988 → 11/1995		55	12	063534881590	**MAN2012**
1.6 i	X 16 SZ	52	09/1994 → 11/1995		55	12	063534881590	**MAN2012**
1.8	18 SV, C 18 NZ	66	09/1988 → 10/1990		100	12	063533479010	**MAN2801**
1.8 i Cat.	C 18 NZ	66	03/1990 → 11/1995		100	12	063533479010	**MAN2801**
2.0 i	20 NE	85	09/1988 → 10/1992		100	12	063533479010	**MAN2801**
2.0 i 16V	C 20 XE	110	09/1988 → 11/1995		100	12	063533479010	**MAN2801**
2.0 i 16V	X 20 XEV	100	09/1993 → 11/1995		100	12	063533479010	**MAN2801**
2.0 i 16V 4x4	C 20 XE	110	01/1992 → 11/1993		100	12	063533479010	**MAN2801**
2.0 i 4x4	20 NE	85	01/1991 → 10/1992		100	12	063533479010	**MAN2801**
2.0 i 4x4	20 SEH	95	09/1988 → 09/1992		100	12	063533479010	**MAN2801**
2.0 i Cat.	C 20 NE	85	09/1990 → 11/1995		100	12	063533479010	**MAN2801**
2.0 SRi	20 SEH	95	09/1988 → 09/1992		100	12	063533479010	**MAN2801**
COMBO Mk I (B)								
1.2	C 12 NZ, X 12 SZ	33	07/1994 → 10/2001		55	12	063534881590	**MAN2012**
1.4	C 14 NZ	44	07/1994 → 10/2001		100	12	063533479010	**MAN2801**
1.4	C 14 NZ	44	09/1994 → 10/2001	⊛	55	12	063534881590	**MAN2012**
1.4	C 14 SE	60	07/1994 → 10/2001		100	12	063533479010	**MAN2801**
COMBO Mk II (C)								
1.3 CDTI 16V	Z 13 DTJ	55	03/2006 →		90	12	063358061010	**MAN1097**
1.3 CDTI 16V	Z 13 DTJ	55	03/2006 →		75	12	063358062010	**MAN1098**
1.3 CDTI 16V	Z 13 DTJ	55	10/2005 →		105	12	063377494010	**MAN7494**
CORSA Cabriolet								
1.4 i 16V	X 14 XE	66	01/1998 →		100	12	063533479010	**MAN2801**
CORSA Mk II (B)								
1.2 i	C 12 NZ, X 12 SZ	33	09/1994 → 08/2000		55	12	063534881590	**MAN2012**
1.4 i	C 14 NZ, X 14 SZ	44	03/1993 → 09/2000		100	12	063533479010	**MAN2801**
1.4 i	C 14 NZ, X 14 SZ	44	09/1994 → 08/2000	⊛	55	12	063534881590	**MAN2012**
1.4 i 16V	X 14 XE	66	09/1994 → 09/2000		100	12	063533479010	**MAN2801**

		kW			A	V	LONG	SHORT
VAUXHALL								
CORSA Mk II (B)								
1.4 i S	C 14 SE	60	03/1993 → 09/2000		100	12	063533479010	**MAN2801**
1.6 GSI 16V	C 16 XE	80	03/1993 → 09/2000		100	12	063533479010	**MAN2801**
1.6 i 16V	X 16 XE	78	09/1994 → 09/2000		100	12	063533479010	**MAN2801**
CORSA Mk III (C)								
1.0 12V	Z 10 XE	43	09/2000 → 08/2003		70	12	063532250220	**MAN2036**
1.0 12V	Z 10 XE	43	09/2000 → 08/2003		100	12	063534150230	**MAN2043**
1.2 16V	Z 12 XE	55	09/2000 → 08/2004		70	12	063532250220	**MAN2036**
1.2 16V	Z 12 XE	55	09/2000 → 08/2004		100	12	063534150230	**MAN2043**
1.2 16V Dualfuel	Z 12 XE	55	08/2001 → 08/2004		70	12	063532250220	**MAN2036**
1.2 16V Dualfuel	Z 12 XE	55	08/2001 → 08/2004		100	12	063534150230	**MAN2043**
1.3 CDTI 16V	Z 13 DT	52	08/2000 → 09/2006		90	12	063358061010	**MAN1097**
1.3 CDTI 16V	Z 13 DT	52	09/2003 → 09/2006		75	12	063358062010	**MAN1098**
1.3 CDTI 16V	Z 13 DT	52	04/2004 → 09/2006		105	12	063377494010	**MAN7494**
CORSA Mk IV (D)								
1.3 CDTI	A 13 DTC, Z 13 DTJ	55	11/2006 →		70	12	063377423010	**MAN7423**
1.3 CDTI	A 13 DTC, Z 13 DTJ	55	11/2006 →		105	12	063377424010	**MAN7424**
1.3 CDTI	A 13 DTC, Z 13 DTJ	55	11/2006 →		120	12	063377425010	**MAN7425**
1.3 CDTI	Z 13 DTH	66	11/2006 →		70	12	063377423010	**MAN7423**
1.3 CDTI	Z 13 DTH	66	11/2006 →		105	12	063377424010	**MAN7424**
1.3 CDTI	Z 13 DTH	66	11/2006 →		120	12	063377425010	**MAN7425**
CORSAVAN Mk II (B)								
1.4 i	C 14 NZ	44	01/1994 → 09/2000		100	12	063533479010	**MAN2801**
1.4 i	C 14 NZ	44	09/1994 → 08/2000	⊛	55	12	063534881590	**MAN2012**
CORSAVAN Mk III (C)								
1.2 16V	Z 12 XE	55	09/2000 → 08/2004		70	12	063532250220	**MAN2036**
1.2 16V	Z 12 XE	55	09/2000 → 08/2004		100	12	063534150230	**MAN2043**
1.2 16V Dualfuel	Z 12 XE	55	08/2001 → 08/2004		70	12	063532250220	**MAN2036**
1.2 16V Dualfuel	Z 12 XE	55	08/2001 → 08/2004		100	12	063534150230	**MAN2043**
1.3 CDTI 16V	Z 13 DT	52	04/2004 →		90	12	063358061010	**MAN1097**
1.3 CDTI 16V	Z 13 DT	52	04/2004 → 09/2006		75	12	063358062010	**MAN1098**
FIRENZA Coupe								
1300		40	01/1972 → 10/1973		55	12	054022581010	**MAN649**
1800		57	01/1972 → 10/1973		55	12	054022581010	**MAN649**
FRONTERA Mk I (A)								
2.2 i	X 22 XE	100	03/1995 → 10/1998		100	12	063533479010	**MAN2801**
FRONTERA Mk I (A) Sport								
2.0 i	C 20 NE, X 20 SE	85	03/1992 → 10/1998		100	12	063533479010	**MAN2801**
FRONTERA Mk II (B)								
2.2 i	X 22 SE, Y 22 SE	100	10/1998 →		100	12	063533479010	**MAN2801**
MERIVA Mk I (A)								
1.3 CDTI	Z 13 DTJ	55	09/2003 → 10/2009		90	12	063358061010	**MAN1097**
1.3 CDTI	Z 13 DTJ	55	09/2003 → 10/2009		75	12	063358062010	**MAN1098**
1.3 CDTI	Z 13 DTJ	55	09/2003 → 10/2009		105	12	063377494010	**MAN7494**

		kW		i	A	V	LONG	SHORT
VAUXHALL								
MERIVA Mk I (A)								
1.4 16V Twinport	Z 14 XEP	66	01/2003 → 10/2009		90	12	063358061010	**MAN1097**
1.6 i 16V Twinport	Z 16 XEP	77	01/2006 → 10/2009		90	12	063358061010	**MAN1097**
1.6 i 16V Twinport	Z 16 XEP	77	01/2006 → 10/2009		75	12	063358062010	**MAN1098**
1.6 Turbo	Z 16 LET	132	05/2006 → 03/2010		90	12	063358061010	**MAN1097**
1.6 Turbo	Z 16 LET	132	05/2006 → 03/2010		75	12	063358062010	**MAN1098**
NOVA								
1.2 N	12 NC, E 12 GV	33	01/1985 → 10/1987		55	12	063534881590	**MAN2012**
1.3 S	13 SB	51	05/1983 → 10/1987		55	12	063534881590	**MAN2012**
NOVA 2 volumi /Coda spiovente								
1.2 i	12 NC, E 12 GV	33	01/1985 → 10/1989		55	12	063534881590	**MAN2012**
1.3 S	13 SB	51	05/1983 → 10/1989		55	12	063534881590	**MAN2012**
1.6		60	05/1989 → 08/1990		55	12	063534881590	**MAN2012**
OMEGA (B)								
2.0	20 SE	85	09/1995 → 09/1996		100	12	063533479010	**MAN2801**
2.0	X 20 SE	85	03/1994 → 09/1999		100	12	063533479010	**MAN2801**
2.0 16V	X 20 XEV	100	03/1994 → 09/1999		100	12	063533479010	**MAN2801**
2.2 16V	Y 22 XE, Z 22 XE	106	01/1994 → 06/2003		100	12	063533479010	**MAN2801**
2.2 16V	Y 22 XE, Z 22 XE	106	09/1999 → 09/2004		100	12	063534150080	**MAN2029**
OMEGA (B) Station wagon								
2.0	X 20 SE	85	03/1994 → 09/1999		100	12	063533479010	**MAN2801**
2.0 16V	X 20 XEV	100	03/1994 → 02/2001		100	12	063533479010	**MAN2801**
2.2 16V	Y 22 XE, Z 22 XE	106	02/1994 → 06/2003		100	12	063533479010	**MAN2801**
2.2 16V	Y 22 XE, Z 22 XE	106	09/1999 → 09/2004		100	12	063534150080	**MAN2029**
SIGNUM								
1.9 CDTI	Z 19 DT	88	05/2004 → 03/2008		120	12	063377490010	**MAN7490**
1.9 CDTI	Z 19 DT	88	05/2004 → 03/2008		105	12	063377492010	**MAN7492**
1.9 CDTI 16V	Z 19 DTH	110	05/2004 → 03/2008		120	12	063377490010	**MAN7490**
1.9 CDTI 16V	Z 19 DTH	110	05/2004 → 03/2008		105	12	063377492010	**MAN7492**
TIGRA Mk I								
1.4 16V	X 14 XE	66	07/1994 → 12/2000		100	12	063533479010	**MAN2801**
1.6 16V	X 16 XE	78	07/1994 → 12/2000		100	12	063533479010	**MAN2801**
TIGRA TwinTop								
1.3 CDTI	Z 13 DT	51	06/2004 → 03/2009		90	12	063358061010	**MAN1097**
1.3 CDTI	Z 13 DT	51	06/2004 → 03/2009		75	12	063358062010	**MAN1098**
1.3 CDTI	Z 13 DT	51	06/2004 →		105	12	063377494010	**MAN7494**
1.4	Z 14 XEP	66	06/2004 → 12/2009		90	12	063358061010	**MAN1097**
VECTRA (B)								
1.6 i	X 16 SZR	55	08/1995 → 10/2001		100	12	063533479010	**MAN2801**
1.6 i 16V	X 16 XEL, Y 16 XE, Z 16 XE	74	08/1995 → 10/2001		100	12	063533479010	**MAN2801**
1.8 i 16V	X 18 XE, X 18 XE1	85	10/1995 → 09/2000		100	12	063533479010	**MAN2801**
1.8 i 16V	Z 18 XE	92	09/2000 →		100	12	063533479010	**MAN2801**
2.0 i 16V	X 20 XEV	100	10/1995 → 01/2001		100	12	063533479010	**MAN2801**

		kW			A	V	LONG	SHORT
VAUXHALL								
VECTRA (B) 2 volumi /Coda spiovente								
1.6 i	X 16 SZR	55	08/1995 → 10/2001		100	12	063533479010	**MAN2801**
1.6 i 16V	X 16 XEL, Y 16 XE, Z 16 XE	74	08/1995 → 10/2001		100	12	063533479010	**MAN2801**
1.8 i 16V	X 18 XE, X 18 XE1	85	10/1995 → 09/2000		100	12	063533479010	**MAN2801**
1.8 i 16V	Z 18 XE	92	09/2000 →		100	12	063533479010	**MAN2801**
2.0 i 16V	X 20 XEV	100	10/1995 → 01/2001		100	12	063533479010	**MAN2801**
VECTRA (B) Station wagon								
1.6 i	X 16 SZR	55	11/1996 →		100	12	063533479010	**MAN2801**
1.6 i 16V	X 16 XEL, Y 16 XE, Z 16 XE	74	11/1996 →		100	12	063533479010	**MAN2801**
1.8 i 16V	X 18 XE, X 18 XE1	85	11/1996 → 09/2000		100	12	063533479010	**MAN2801**
1.8 i 16V	Z 18 XE	92	09/2000 →		100	12	063533479010	**MAN2801**
2.0 i 16V	X 20 XEV	100	10/1995 → 01/2001		100	12	063533479010	**MAN2801**
VECTRA Mk II (C)								
1.9 CDTI	Z 19 DT	88	04/2004 → 08/2005		120	12	063377490010	**MAN7490**
1.9 CDTI	Z 19 DT	88	04/2004 → 08/2005		130	12	063377491010	**MAN7491**
1.9 CDTI	Z 19 DT	88	04/2004 → 08/2005		105	12	063377492010	**MAN7492**
1.9 CDTI	Z 19 DTL	74	10/2005 → 07/2008		120	12	063377490010	**MAN7490**
1.9 CDTI	Z 19 DTL	74	10/2005 → 07/2008		130	12	063377491010	**MAN7491**
1.9 CDTI	Z 19 DTL	74	10/2005 → 07/2008		105	12	063377492010	**MAN7492**
1.9 CDTI 16V	Z 19 DTH	110	04/2004 → 08/2005		120	12	063377490010	**MAN7490**
VECTRA Mk II (C)								
1.9 CDTI 16V	Z 19 DTH	110	04/2004 → 08/2005		130	12	063377491010	**MAN7491**
1.9 CDTI 16V	Z 19 DTH	110	04/2004 → 08/2005		105	12	063377492010	**MAN7492**
VECTRA Mk II (C) GTS								
1.9 CDTI	Z 19 DT	88	04/2004 → 08/2005		120	12	063377490010	**MAN7490**
1.9 CDTI	Z 19 DT	88	04/2004 → 08/2005		130	12	063377491010	**MAN7491**
1.9 CDTI	Z 19 DT	88	04/2004 → 08/2005		105	12	063377492010	**MAN7492**
1.9 CDTI	Z 19 DTL	74	10/2005 → 07/2008		120	12	063377490010	**MAN7490**
1.9 CDTI	Z 19 DTL	74	10/2005 → 07/2008		130	12	063377491010	**MAN7491**
1.9 CDTI	Z 19 DTL	74	10/2005 → 07/2008		105	12	063377492010	**MAN7492**
1.9 CDTI 16V	Z 19 DTH	110	04/2004 → 08/2005		120	12	063377490010	**MAN7490**
1.9 CDTI 16V	Z 19 DTH	110	04/2004 → 08/2005		130	12	063377491010	**MAN7491**
1.9 CDTI 16V	Z 19 DTH	110	04/2004 → 08/2005		105	12	063377492010	**MAN7492**
VECTRA Mk II (C) Station wagon								
1.9 CDTI	Z 19 DT	88	04/2004 → 08/2005		120	12	063377490010	**MAN7490**
1.9 CDTI	Z 19 DT	88	04/2004 → 08/2005		130	12	063377491010	**MAN7491**
1.9 CDTI	Z 19 DT	88	04/2004 → 08/2005		105	12	063377492010	**MAN7492**
1.9 CDTI	Z 19 DTL	74	10/2005 → 07/2008		120	12	063377490010	**MAN7490**
1.9 CDTI	Z 19 DTL	74	10/2005 → 07/2008		130	12	063377491010	**MAN7491**
1.9 CDTI	Z 19 DTL	74	10/2005 → 07/2008		105	12	063377492010	**MAN7492**
1.9 CDTI 16V	Z 19 DTH	110	04/2004 → 08/2005		120	12	063377490010	**MAN7490**
1.9 CDTI 16V	Z 19 DTH	110	04/2004 → 08/2005		130	12	063377491010	**MAN7491**
1.9 CDTI 16V	Z 19 DTH	110	04/2004 → 08/2005		105	12	063377492010	**MAN7492**

		kW			A	V	LONG	SHORT
VAUXHALL								
VICTOR								
1600		53	03/1969 → 09/1972		55	12	054022581010	**MAN649**
1800		57	10/1972 → 10/1976		55	12	054022581010	**MAN649**
2000		65	01/1967 → 09/1972		55	12	054022581010	**MAN649**
VICTOR Station wagon								
1800		57	10/1972 → 10/1976		55	12	054022581010	**MAN649**
VIVA								
1256		43	01/1972 → 10/1975		55	12	054022384010	**MAN653**
1600		51	10/1970 → 10/1972		55	12	054022581010	**MAN649**
1600		53	01/1968 → 09/1970		55	12	054022581010	**MAN649**
1800		57	01/1973 → 10/1979		55	12	054022581010	**MAN649**
VIVA Coupe								
1256 E		43	01/1972 → 10/1975		55	12	054022384010	**MAN653**
VIVA Station wagon								
1256		43	01/1972 → 10/1975		55	12	054022384010	**MAN653**
1600		51	10/1970 → 10/1972		55	12	054022581010	**MAN649**
1800		57	01/1973 → 10/1978		55	12	054022581010	**MAN649**
VX								
2000 4/90		78	01/1969 → 10/1971		55	12	054022581010	**MAN649**
ZAFIRA Mk II (B)								
1.9 CDTI	Z 19 DT	88	02/2009 →	❄	120	12	063377490010	**MAN7490**
1.9 CDTI	Z 19 DT	88	02/2009 →		130	12	063377491010	**MAN7491**
1.9 CDTI	Z 19 DT	88	02/2009 →		105	12	063377492010	**MAN7492**
1.9 CDTI	Z 19 DTH	110	02/2009 →	❄	120	12	063377490010	**MAN7490**
1.9 CDTI	Z 19 DTH	110	02/2009 →		130	12	063377491010	**MAN7491**
1.9 CDTI	Z 19 DTH	110	02/2009 →		105	12	063377492010	**MAN7492**
VOLVO								
66								
DL 1.1	B 11	33	08/1975 → 08/1978		55	12	063321154010	**MAN344**
GL 1.3	B 130	42	08/1975 → 08/1978		55	12	063321154010	**MAN344**
66 Station wagon								
DL 1.1	B 11	33	10/1975 → 12/1978		55	12	063321154010	**MAN344**
GL 1.3	B 130	42	10/1975 → 12/1978		55	12	063321154010	**MAN344**
C30								
1.6 D	D 4164 T	80	10/2006 →		150	12	063377416010	**MAN7416**
1.6 D2	D 4162 T	84	10/2010 →		150	12	063377416010	**MAN7416**
2.0 D	D 4204 T	100	10/2006 →		150	12	063377416010	**MAN7416**
C70 II Cabriolet								
2.0 D	D 4204 T	100	01/2008 →		150	12	063377416010	**MAN7416**
S40 II (MS)								
1.6 D	D 4164 T	81	01/2005 →		150	12	063377416010	**MAN7416**
2.0 D	D 4204 T	100	01/2004 →		150	12	063377416010	**MAN7416**
2.0 D4	D 4204 T2	96	07/2005 →		150	12	063377416010	**MAN7416**
V50 (MW)								
1.6 D	D 4164 T	81	01/2005 →		150	12	063377416010	**MAN7416**
2.0 D	D 4204 T	100	04/2004 →		150	12	063377416010	**MAN7416**

		kW			A	V	LONG	SHORT
VW								
BORA (1J2)								
1.9 SDI	AGP, AQM	50	10/1998 → 05/2005		90	12	063533250010	**MAN2037**
1.9 TDI	AGR, ALH	66	10/1998 → 06/2001		90	12	063533250010	**MAN2037**
1.9 TDI	AHF, ASV	81	05/2000 → 06/2001		90	12	063533250010	**MAN2037**
1.9 TDI	ARL	110	05/2000 → 05/2005		90	12	063533250010	**MAN2037**
1.9 TDI	ASZ	96	01/2001 → 05/2005		90	12	063533250010	**MAN2037**
1.9 TDI	ATD, AXR	74	05/2001 → 05/2005		90	12	063533250010	**MAN2037**
1.9 TDI 4motion	AGR	66	02/1999 → 06/2001		90	12	063533250010	**MAN2037**
1.9 TDI 4motion	ARL	110	09/2000 → 05/2005		90	12	063533250010	**MAN2037**
1.9 TDI 4motion	ASZ	96	01/2001 → 05/2005		90	12	063533250010	**MAN2037**
2.3 V5	AGZ	110	10/1998 → 10/2000		90	12	063533250010	**MAN2037**
2.3 V5	AQN	125	10/2000 → 05/2005		90	12	063533250010	**MAN2037**
2.3 V5 4motion	AGZ	110	01/1999 → 10/2000		90	12	063533250010	**MAN2037**
2.3 V5 4motion	AQN	125	10/2000 → 05/2005		90	12	063533250010	**MAN2037**
2.8 V6 4motion	AQP, AUE, BDE	150	03/1999 → 05/2005		90	12	063533250010	**MAN2037**
BORA Station wagon (1J6)								
1.9 TDI	AGR	66	07/2004 → 05/2005		90	12	063533250010	**MAN2037**
1.9 TDI	AHF, ASV	81	05/2000 → 06/2001		90	12	063533250010	**MAN2037**
1.9 TDI	ARL	110	05/2002 → 05/2005		90	12	063533250010	**MAN2037**
1.9 TDI	ASZ	96	01/2001 → 05/2005		90	12	063533250010	**MAN2037**
1.9 TDI	ATD, AXR	74	05/2001 → 05/2005		90	12	063533250010	**MAN2037**
1.9 TDI 4motion	ASZ	96	01/2001 → 05/2005		90	12	063533250010	**MAN2037**
1.9 TDI 4motion	ARL	110	05/2002 → 05/2005		90	12	063533250010	**MAN2037**
2.3 V5	AGZ	110	05/1999 → 10/2000		90	12	063533250010	**MAN2037**
2.3 V5	AQN	125	10/2000 → 05/2005		90	12	063533250010	**MAN2037**
2.3 V5 4motion	AGZ	110	05/2000 → 10/2000		90	12	063533250010	**MAN2037**
2.3 V5 4motion	AQN	125	10/2000 → 05/2005		90	12	063533250010	**MAN2037**
2.8 V6 4motion	AQP, AUE, BDE	150	05/1999 → 05/2005		90	12	063533250010	**MAN2037**
CADDY II Furgonato (9K9A)								
1.4	AUA	55	09/2000 → 06/2003		90	12	063533250130	**MAN2038**
1.7 SDI	AHB	42	07/1996 → 09/2000		120	12	063535150200	**MAN2024**
1.9 SDI	AEY, AYQ	47	09/2000 → 06/2003		90	12	063533250010	**MAN2037**
1.9 SDI	AEY, AYQ	47	10/1996 → 09/2000		120	12	063535150200	**MAN2024**
1.9 TDI	1Z, AHU, ALH	66	09/2000 → 06/2003		90	12	063533250010	**MAN2037**
1.9 TDI	1Z, AHU, ALH	66	10/1996 → 09/2000		120	12	063535150200	**MAN2024**
60 1.4	AEX, APQ, AUD	44	09/2000 → 06/2003		90	12	063533250130	**MAN2038**
CADDY II Station wagon (9K9B)								
1.4	AEX, AKV, APQ, AUD	44	09/2000 → 06/2003		90	12	063533250130	**MAN2038**
1.4 16V	AUA	55	09/2000 → 06/2003		90	12	063533250130	**MAN2038**
1.7 SDI	AHB	42	07/1996 → 09/2000		120	12	063535150200	**MAN2024**
1.9 SDI	AEY, AYQ	47	09/2000 → 06/2003		90	12	063533250010	**MAN2037**
1.9 SDI	AEY, AYQ	47	11/1995 → 09/2000		120	12	063535150200	**MAN2024**
1.9 TDI	AHU, ALE, ALH	66	09/2000 → 06/2003		90	12	063533250010	**MAN2037**
1.9 TDI	AHU, ALE, ALH	66	12/1996 → 09/2000		120	12	063535150200	**MAN2024**

		kW		i	A	V	MAGNETI MARELLI LONG	MAGNETI MARELLI SHORT
VW								
FOX (5Z1, 5Z3)								
1.0	AQZ, BJE, BNX	53	10/2003 → 04/2008		90	12	063533250130	**MAN2038**
1.0	CCNA	54	05/2008 →		90	12	063533250130	**MAN2038**
1.0 Total Flex	CCNA	54	05/2008 →		90	12	063533250130	**MAN2038**
1.4	BKR	55	04/2005 →		90	12	063533250130	**MAN2038**
1.6 Total Flex	BJA, BPA, CCRA	74	10/2003 →		90	12	063533250130	**MAN2038**
GOLF II (19E, 1G1)								
1.6	ABN, EZ, HM	55	12/1990 → 07/1991		65	12	063534893700	**MAN2018**
1.6	PN	51	12/1990 → 07/1992		65	12	063534893700	**MAN2018**
1.6	RF	53	12/1990 → 10/1991		65	12	063534893700	**MAN2018**
1.8	GU, GX, HV	66	12/1990 → 10/1991		65	12	063534893700	**MAN2018**
1.8 GTI	DX, EV, GZ, PB	82	12/1990 → 10/1991		65	12	063534893700	**MAN2018**
1.8 GTI Cat.	PF	79	12/1990 → 10/1991		65	12	063534893700	**MAN2018**
1.8 i Cat.	GX, RP	66	12/1990 → 10/1991		65	12	063534893700	**MAN2018**
1.8 i Syncro Cat.	RP	66	12/1990 → 10/1991		65	12	063534893700	**MAN2018**
GOLF III (1H1)								
1.9 TDI	1Z, AHU, ALE	66	08/1996 → 08/1997		120	12	063535150200	**MAN2024**
1.9 TDI	AFN	81	04/1996 → 08/1997		120	12	063535150200	**MAN2024**
1.9 TDI Syncro (1HX1)	1Z, AHU, ALE	66	08/1996 → 08/1997		120	12	063535150200	**MAN2024**
GOLF III Cabriolet (1E7)								
1.9 TDI	1Z, AHU, ALE	66	08/1996 → 04/1998		120	12	063535150200	**MAN2024**
1.9 TDI	AFN	81	09/1996 → 04/1998		120	12	063535150200	**MAN2024**
GOLF III Variant (1H5)								
1.9 TDI	1Z, AHU, ALE	66	08/1996 → 02/1999		120	12	063535150200	**MAN2024**
1.9 TDI	AFN	81	04/1996 → 02/1999		120	12	063535150200	**MAN2024**
GOLF IV (1J1)								
1.9 SDI	AGP, AQM	50	05/1998 → 05/2004		90	12	063533250010	**MAN2037**
1.9 TDI	AGR, ALH	66	05/1998 → 05/2004		90	12	063533250010	**MAN2037**
1.9 TDI	AHF, ASV	81	05/1998 → 05/2004		90	12	063533250010	**MAN2037**
1.9 TDI	AJM, AUY	85	05/1999 → 06/2001		90	12	063533250010	**MAN2037**
1.9 TDI	ARL	110	09/2000 → 05/2004		90	12	063533250010	**MAN2037**
1.9 TDI	ASZ	96	04/2001 → 05/2004		90	12	063533250010	**MAN2037**
1.9 TDI	ATD, AXR	74	05/2001 → 05/2004	⎈	90	12	063533250010	**MAN2037**
1.9 TDI 4motion	AGR, ALH	66	07/1998 → 04/2002		90	12	063533250010	**MAN2037**
1.9 TDI 4motion	AJM, AUY	85	09/1999 → 06/2001		90	12	063533250010	**MAN2037**
1.9 TDI 4motion	ARL	110	09/2000 → 06/2005		90	12	063533250010	**MAN2037**
1.9 TDI 4motion	ASZ	96	04/2001 → 06/2005		90	12	063533250010	**MAN2037**
1.9 TDI 4motion	ATD	74	09/2000 → 06/2005	⎈	90	12	063533250010	**MAN2037**
2.3 V5	AGZ	110	05/1998 → 10/2000		90	12	063533250010	**MAN2037**
2.3 V5	AQN	125	10/2000 → 05/2004		90	12	063533250010	**MAN2037**
2.3 V5 4motion	AGZ	110	12/1998 → 10/2000		90	12	063533250010	**MAN2037**
2.3 V5 4motion	AQN	125	10/2000 → 06/2005		90	12	063533250010	**MAN2037**
2.8 V6 4motion	AQP, AUE, BDE	150	01/2000 → 04/2001		90	12	063533250010	**MAN2037**
3.2 R32 4motion	BFH, BML	177	09/2002 → 05/2004		90	12	063533250010	**MAN2037**

		kW			A	V	LONG	SHORT
VW								
GOLF IV Cabriolet (1E7)								
1.9 TDI	AFN, AVG	81	06/1998 → 10/2000		120	12	063535150200	**MAN2024**
1.9 TDI	AHU, ALE	66	06/1998 → 12/2001		120	12	063535150200	**MAN2024**
GOLF IV Variant (1J5)								
1.9 SDI	AGP, AQM	50	05/1999 → 06/2006		90	12	063533250010	**MAN2037**
1.9 TDI	AGR, ALH	66	05/1999 → 05/2006		90	12	063533250010	**MAN2037**
1.9 TDI	AHF, ASV	81	05/1999 → 06/2001		90	12	063533250010	**MAN2037**
1.9 TDI	AJM, AUY	85	08/1999 → 06/2001		90	12	063533250010	**MAN2037**
1.9 TDI	ASZ	96	04/2001 → 06/2006		90	12	063533250010	**MAN2037**
1.9 TDI	ATD, AXR	74	05/2001 → 06/2006	⎈	90	12	063533250010	**MAN2037**
1.9 TDI 4motion	AGR, ALH	66	05/1999 → 04/2002		90	12	063533250010	**MAN2037**
1.9 TDI 4motion	AJM	85	05/1999 → 06/2001		90	12	063533250010	**MAN2037**
1.9 TDI 4motion	ASZ	96	04/2001 → 06/2006		90	12	063533250010	**MAN2037**
1.9 TDI 4motion	ATD	74	09/2000 → 06/2006	⎈	90	12	063533250010	**MAN2037**
2.3 V5	AGZ	110	05/1999 → 02/2001		90	12	063533250010	**MAN2037**
2.3 V5	AQN	125	10/2000 → 06/2006		90	12	063533250010	**MAN2037**
2.3 V5 4motion	AGZ	110	05/1999 → 02/2001		90	12	063533250010	**MAN2037**
2.3 V5 4motion	AQN	125	10/2000 → 06/2006		90	12	063533250010	**MAN2037**
2.8 V6 4motion	AQP, AUE, BDE	150	01/2000 → 04/2001		90	12	063533250010	**MAN2037**
JETTA II (19E, 1G2)								
1.6	ABN, EZ, HM	55	07/1991 → 07/1992		65	12	063534893700	**MAN2018**
1.6	PN	51	07/1991 → 10/1991		65	12	063534893700	**MAN2018**
1.6	RF	53	07/1991 → 10/1991		65	12	063534893700	**MAN2018**
1.8	EV, GZ, PB	82	07/1991 → 10/1991		65	12	063534893700	**MAN2018**
1.8	GU, GX, HV	66	11/1990 → 10/1991		65	12	063534893700	**MAN2018**
1.8 Cat.	GX, RP	66	07/1991 → 10/1991		65	12	063534893700	**MAN2018**
1.8 Cat.	PF	79	07/1991 → 10/1991		65	12	063534893700	**MAN2018**
1.8 Syncro	1P	72	11/1990 → 07/1991		65	12	063534893700	**MAN2018**
LUPO (6X1, 6E1)								
1.0	AER, ALD, ALL, ANV, AUC	37	10/1998 → 05/2000		90	12	063533250130	**MAN2038**
1.4	AUD	44	10/2000 → 07/2005		90	12	063533250130	**MAN2038**
1.4 16V	AHW, AKQ, APE, AUA, BBY	55	10/1998 → 07/2005		90	12	063533250130	**MAN2038**
1.4 16V	AFK, AQQ, AUB	74	08/1999 → 07/2005		90	12	063533250130	**MAN2038**
1.6 GTI	AVY	92	09/2000 → 07/2005		90	12	063533250130	**MAN2038**
MULTIVAN V (7HM, 7HN, 7HF, 7EF, 7EM, 7EN)								
1.9 TDI	AXB	77	04/2003 → 11/2009		90	12	063533250010	**MAN2037**
NEW BEETLE (9C1, 1C1)								
1.9 TDI	ALH	66	09/1998 → 06/2004		90	12	063533250010	**MAN2037**
1.9 TDI	ATD, BEW	74	06/2003 → 12/2006		90	12	063533250010	**MAN2037**
1.9 TDI	BSW	77	07/2005 →		90	12	063533250010	**MAN2037**
2.3 V5	AQN	125	10/2000 → 06/2005		90	12	063533250010	**MAN2037**

		kW		i	A	V	LONG	SHORT
VW								
NEW BEETLE Cabriolet (1Y7)								
1.9 TDI	AXR	74	06/2003 → 06/2005		90	12	063533250010	**MAN2037**
1.9 TDI	BSW	77	07/2005 →		90	12	063533250010	**MAN2037**
PASSAT (32B)								
1.6 D	CR, JK	40	08/1985 → 03/1988		65	12	063534893700	**MAN2018**
1.6 TD	CY	51	08/1985 → 03/1988		65	12	063534893700	**MAN2018**
PASSAT Tre volumi (32B)								
1.6 TD	CY	51	08/1985 → 03/1988		65	12	063534893700	**MAN2018**
PASSAT Variant (32B)								
1.6 D	CR, JK	40	08/1985 → 03/1988		65	12	063534893700	**MAN2018**
1.6 TD	CY	51	08/1985 → 03/1988		65	12	063534893700	**MAN2018**
POLO (6N2)								
1.0	ALD, AUC	37	10/1999 → 09/2001	⊛	90	12	063533250130	**MAN2038**
1.4	AKK, AUD	44	10/1999 → 09/2001	⊛	90	12	063533250130	**MAN2038**
1.4	AKP, ANX	40	10/1999 → 09/2001	⊛	90	12	063533250130	**MAN2038**
1.4 16V	AFK, AQQ, AUB	74	10/1999 → 09/2001		90	12	063533250130	**MAN2038**
1.4 16V	AHW, APE, AUA	55	10/1999 → 09/2001		90	12	063533250130	**MAN2038**
1.6 16V GTI	ARC, AVY	92	11/1999 → 09/2001		90	12	063533250130	**MAN2038**
POLO (9N_)								
1.4 16V	AUA, BBY, BKY	55	10/2001 → 07/2007	⊛	90	12	063533250130	**MAN2038**
1.4 16V	AUB, BBZ	74	10/2001 → 05/2007	⊛	90	12	063533250130	**MAN2038**
1.4 16V	BUD	59	05/2006 →	⊛	90	12	063533250130	**MAN2038**
1.9 SDI	ASY	47	10/2001 →		90	12	063533250010	**MAN2037**
1.9 TDI	ASZ, BLT	96	11/2003 →		90	12	063533250010	**MAN2037**
1.9 TDI	ATD, AXR, BMT	74	10/2001 →		90	12	063533250010	**MAN2037**
POLO CLASSIC (6KV2)								
110 1.9 TDI	AFN, ASV	81	10/1999 → 09/2001		90	12	063533250010	**MAN2037**
110 1.9 TDI	AFN, ASV	81	08/1998 → 08/1999		120	12	063535150200	**MAN2024**
57 1.7 SDI	AKW	42	11/1997 → 08/1999		120	12	063535150200	**MAN2024**
60 1.4	AEX, AKK, AKV, ANW, APQ, AUD	44	10/1999 → 09/2001		90	12	063533250130	**MAN2038**
68 1.9 SDI	AGP, AQM	50	10/1999 → 09/2001		90	12	063533250010	**MAN2037**
75 1.4 16V	APE, AUA	55	10/1999 → 09/2001		90	12	063533250130	**MAN2038**
75 1.6	AEE, ALM	55	07/1998 → 09/2001		90	12	063533250130	**MAN2038**
90 1.9 TDI	AGR, AHU, ALE, ALH	66	10/1999 → 09/2001		90	12	063533250010	**MAN2037**
90 1.9 TDI	AGR, AHU, ALE, ALH	66	09/1996 → 08/1999		120	12	063535150200	**MAN2024**
POLO Tre volumi								
1.4	BBY, BKY	55	07/2003 →		90	12	063533250130	**MAN2038**
1.4	BBZ	74	11/2003 →		90	12	063533250130	**MAN2038**
1.6	BAH	74	07/2003 →		90	12	063533250130	**MAN2038**
1.6 Total Flex	BPA	74	12/2004 → 04/2008		90	12	063533250130	**MAN2038**
1.9 SDI	ASY	47	11/2003 →		90	12	063533250010	**MAN2037**

		kW			A	V	LONG	SHORT
VW								
POLO Variant (6KV5)								
1.4	AEX, AKK, AKV, ANW, APQ, AUD	44	05/1997 → 09/2001		90	12	063533250130	**MAN2038**
1.4	AKP	40	12/1998 → 09/2001	⊛	90	12	063533250130	**MAN2038**
1.4 16V	APE, AUA	55	10/1999 → 09/2001		90	12	063533250130	**MAN2038**
1.6	AEE, ALM	55	07/1998 → 09/2001		90	12	063533250130	**MAN2038**
1.7 SDI	AKW	42	11/1997 → 08/1999		120	12	063535150200	**MAN2024**
1.9 SDI	AGP, AQM	50	10/1999 → 09/2001		90	12	063533250010	**MAN2037**
1.9 TDI	AFN, ASV	81	10/1999 → 09/2001		90	12	063533250010	**MAN2037**
1.9 TDI	AGR, AHU, ALE, ALH	66	05/1997 → 09/2001		90	12	063533250010	**MAN2037**
1.9 TDI	AGR, AHU, ALE, ALH	66	06/1997 → 08/1999		120	12	063535150200	**MAN2024**
SHARAN (7M8, 7M9, 7M6)								
1.8 T 20V	AJH, AWC	110	05/1999 → 02/2000		90	12	063533250010	**MAN2037**
1.9 TDI	1Z, AHU, ANU	66	03/1999 → 02/2000		90	12	063533250010	**MAN2037**
1.9 TDI	AFN, AVG	81	05/1999 → 02/2000		90	12	063533250010	**MAN2037**
1.9 TDI	AFN, AVG	81	09/1996 → 04/1999		120	12	063535150200	**MAN2024**
1.9 TDI	ASZ	96	11/2002 → 12/2002		90	12	063533250010	**MAN2037**
1.9 TDI	AUY, BVK	85	05/2000 → 11/2008		90	12	063533250010	**MAN2037**
1.9 TDI 4motion	AUY, BVK	85	05/2000 → 03/2010		90	12	063533250010	**MAN2037**
2.0	ADY, ATM	85	05/1999 → 02/2000	⊛	90	12	063533250130	**MAN2038**
SPACEFOX (5Z6, 5Z7)								
1.6 FSI	BPA, CCRA, CFZA	74	04/2006 → 04/2008		90	12	063533250130	**MAN2038**
1.6 Total Flex	BPA, CCRA, CFZA	74	04/2006 → 04/2008		90	12	063533250130	**MAN2038**
TRANSPORTER IV Autobus (70XB, 70XC, 7DB, 7DW)								
1.8	PD	49	06/1991 → 07/1992		65	12	063534893700	**MAN2018**
2.0	AAC	62	11/1998 → 04/2003		90	12	063533250130	**MAN2038**
2.0	AAC	62	06/1991 → 04/2003		65	12	063534893700	**MAN2018**
TRANSPORTER IV Furgonato (70XA)								
2.0	AAC	62	11/1998 → 04/2003		90	12	063533250130	**MAN2038**
2.0	AAC	62	06/1991 → 04/2003		65	12	063534893700	**MAN2018**
TRANSPORTER IV Pianale piatto/Telaio (70XD)								
2.0	AAC	62	11/1998 → 04/2003		90	12	063533250130	**MAN2038**
TRANSPORTER V Autobus (7HB, 7HJ, 7EB, 7EJ)								
1.9 TDI	AXB	77	04/2003 → 11/2009		90	12	063533250010	**MAN2037**
1.9 TDI	AXC	63	04/2003 → 11/2009		90	12	063533250010	**MAN2037**
TRANSPORTER V Furgonato (7HA, 7HH, 7EA, 7EH)								
1.9 TDI	AXB	77	04/2003 → 11/2009		90	12	063533250010	**MAN2037**
1.9 TDI	AXC	63	04/2003 → 11/2009		90	12	063533250010	**MAN2037**
TRANSPORTER V Pianale piatto/Telaio (7JD, 7JE, 7JL, 7JY, 7JZ..)								
1.9 TDI	AXB	77	04/2003 → 11/2009		90	12	063533250010	**MAN2037**
1.9 TDI	AXC	63	04/2003 → 11/2009		90	12	063533250010	**MAN2037**
1.9 TDI	BRR	62	06/2006 → 11/2009		90	12	063533250010	**MAN2037**
1.9 TDI	BRS	75	06/2006 → 11/2009		90	12	063533250010	**MAN2037**

		kW		i	A	V	LONG	SHORT
VW								
VENTO (1H2)								
1.9 TDI	1Z, AHU, ALE	66	09/1993 → 09/1998		120	12	063535150200	**MAN2024**
1.9 TDI	AFN	81	04/1996 → 12/1997		120	12	063535150200	**MAN2024**
ZASTAVA								
101 (1100)								
1.1	128 A.000	40	06/1973 → 01/1990		55	12	063321154010	**MAN344**

Applicazione per marca e veicolo
Vehicle application guide
Zuordnung nach Marke und Fahrzeugtyp
Affectations par marques et véhicules
Aplicación por marca y vehículo
Aplicação por marca e veículo
Εφαρμογή ανά μοντέλο
Zastosowanie dla marki i pojazdu
Применение по марке и модели
Marka ve araca göre uygulama



		kW ÷ kW		i	A	V	MAGNETI MARELLI LONG	MAGNETI MARELLI SHORT
DAF								
65								
FA 65.180	NS 133 L, NS 133 M	133	03/1993 → 02/1998		55	24	063534699820	**MAN2011**
FA 65.210	NS 156 L, NS 156 M	156	03/1993 → 02/1998		55	24	063534699820	**MAN2011**
FAV 65.180	NS 133 L, NS 133 M	133	03/1993 → 02/1998		55	24	063534699820	**MAN2011**
FAV 65.210	NS 156 L, NS 156 M	156	03/1993 → 02/1998		55	24	063534699820	**MAN2011**
75								
FA 75.240	RS 180, RS 180 L, RS 180 M	180	07/1992 → 02/1998		55	24	063534699820	**MAN2011**
FA 75.270	RS 200, RS 200 L, RS 200 M	200	07/1992 → 02/1998		55	24	063534699820	**MAN2011**
FA 75.300	RS 222, RS 222 L, RS 222 M	222	07/1992 → 02/1998		55	24	063534699820	**MAN2011**
FAG 75.240,FAN 75.240	RS 180 L, RS 180 M	180	07/1992 → 02/1998		55	24	063534699820	**MAN2011**
FAG 75.270,FAN 75.270	RS 200 L, RS 200 M	200	07/1992 → 02/1998		55	24	063534699820	**MAN2011**
FAG 75.300,FAN 75.300	RS 222 L, RS 222 M	222	07/1992 → 02/1998		55	24	063534699820	**MAN2011**
FAR 75.240,FAS 75.240	RS 180 L, RS 180 M	180	07/1992 → 02/1998		55	24	063534699820	**MAN2011**
FAR 75.270,FAS 75.270	RS 200 L, RS 200 M	200	07/1992 → 02/1998		55	24	063534699820	**MAN2011**
FAR 75.300,FAS 75.300	RS 222 L, RS 222 M	222	07/1992 → 02/1998		55	24	063534699820	**MAN2011**
FAT 75.270	RS 200 L, RS 200 M	200	07/1992 → 02/1998		55	24	063534699820	**MAN2011**
FAV 75.240	RS 180 L, RS 180 M	180	07/1992 → 02/1998		55	24	063534699820	**MAN2011**
FAV 75.270	RS 200 L, RS 200 M	200	07/1992 → 02/1998		55	24	063534699820	**MAN2011**
FT 75.240	RS 180, RS 180 L, RS 180 M	180	07/1992 → 02/1998		55	24	063534699820	**MAN2011**
FT 75.270	RS 200, RS 200 L, RS 200 M	200	07/1992 → 02/1998		55	24	063534699820	**MAN2011**
FT 75.300	RS 222, RS 222 L, RS 222 M	222	07/1992 → 02/1998		55	24	063534699820	**MAN2011**
85								
FA 85.330	WS 242, WS 242 L, WS 242 M	242	10/1992 → 12/1997		55	24	063534699820	**MAN2011**
FA 85.360	WS 268, WS 268 L, WS 268 M	268	10/1992 → 12/1997		55	24	063534699820	**MAN2011**

		kW ÷ kW		i	A	V	LONG	SHORT
DAF								
85								
FA 85.400	WS 295 M	295	03/1995 → 12/1997		55	24	063534699820	**MAN2011**
FAD 85.330	WS 242 L, WS 242 M	242	10/1992 → 12/1997		55	24	063534699820	**MAN2011**
FAD 85.360	WS 268 L, WS 268 M	268	10/1992 → 12/1997		55	24	063534699820	**MAN2011**
FAD 85.400	WS 295 M	295	03/1995 → 12/1997		55	24	063534699820	**MAN2011**
FAG 85.330,FAR 85.330,FAS 85.330	WS 242 L, WS 242 M	242	10/1992 → 12/1997		55	24	063534699820	**MAN2011**
FAG 85.360,FAR 85.360,FAS 85.360	WS 268 L, WS 268 M	268	10/1992 → 12/1997		55	24	063534699820	**MAN2011**
FAG 85.400,FAR 85.400,FAS 85.400	WS 295 M	295	03/1995 → 12/1997		55	24	063534699820	**MAN2011**
FAT 85.330	WS 242 L, WS 242 M	242	10/1992 → 12/1997		55	24	063534699820	**MAN2011**
FAT 85.360	WS 268 L, WS 268 M	268	10/1992 → 12/1997		55	24	063534699820	**MAN2011**
FAT 85.400	WS 295 M	295	03/1995 → 12/1997		55	24	063534699820	**MAN2011**
FT 85.330	WS 242, WS 242 L, WS 242 M	242	10/1992 → 12/1997		55	24	063534699820	**MAN2011**
FT 85.360	WS 268 L, WS 268 M	268	10/1992 → 12/1997		55	24	063534699820	**MAN2011**
FT 85.400	WS 295 M	295	03/1995 → 12/1997		55	24	063534699820	**MAN2011**
FTG 85.330	WS 242 L, WS 242 M	242	10/1992 → 12/1997		55	24	063534699820	**MAN2011**
FTG 85.360	WS 268 L, WS 268 M	268	10/1992 → 12/1997		55	24	063534699820	**MAN2011**
FTG 85.400	WS 295 M	295	03/1995 → 12/1997		55	24	063534699820	**MAN2011**
FTT 85.330	WS 242 L, WS 242 M	242	10/1992 → 12/1997		55	24	063534699820	**MAN2011**
FTT 85.360	WS 268 L, WS 268 M	268	10/1992 → 12/1997		55	24	063534699820	**MAN2011**
FTT 85.400	WS 295 M	295	03/1995 → 12/1997		55	24	063534699820	**MAN2011**
85 CF								
FA 85 CF 380	XF 280 M	280	02/1998 → 12/2000		100	12	063321391010	**MAN789**
IVECO								
491.18								
2P			→		55	24	063534690370	**MAN2008**
491.24								
CITY CLASS 27			→		55	24	063534690370	**MAN2008**
GNG			→		55	24	063534690370	**MAN2008**
EuroCargo								
100 E 15	8060.25R.4200 LTC, 8060.45R.5000, 8060.45R.5001, 8060.45R.5003, 8060.45R.5005	105	01/1991 → 08/2000		55	24	063534690480	**MAN2009**

		kW ÷ kW			A	V	LONG	SHORT
IVECO								
EuroCargo								
100 E 15	8060.25R.4200 LTC, 8060.45R.5000, 8060.45R.5001, 8060.45R.5003, 8060.45R.5005	105	01/1991 → 08/2000		35	24	063534882530	**MAN2015**
100 E 15 K	8060.25R.4200 LTC	105	01/1991 → 08/2000		55	24	063534690480	**MAN2009**
100 E 15 K	8060.25R.4200 LTC	105	01/1991 → 08/2000		35	24	063534882530	**MAN2015**
100 E 17 K tector, 100 E 17 DK tector	F4AE0481A	125	09/2000 → 08/2003		70	24	063535550050	**MAN2003**
100 E 17 K tector, 100 E 17 DK tector	F4AE0481A	125	09/2000 → 08/2003		90	24	063536550050	**MAN2045**
100 E 17, 100 E 17 DP tector, 100 E 18 tector	F4AE0481A, F4AE3481B	125 130	09/2000 → 08/2003		70	24	063535550050	**MAN2003**
100 E 17, 100 E 17 DP tector, 100 E 18 tector	F4AE0481A, F4AE3481B	125 130	09/2000 → 08/2003		90	24	063536550050	**MAN2045**
100 E 18	8060.25V.4000	130	01/1991 → 11/2000		55	24	063534690480	**MAN2009**
100 E 18	8060.25V.4000	130	01/1991 → 11/2000		35	24	063534882530	**MAN2015**
100 E 18 K	8060.25V.4000	130	01/1991 → 11/2000		55	24	063534690480	**MAN2009**
100 E 18 K	8060.25V.4000	130	01/1991 → 11/2000		35	24	063534882530	**MAN2015**
100 E 18 K tector	F4AE3481B	130	09/2006 →		70	24	063535550050	**MAN2003**
100 E 18 K tector	F4AE3481B	130	09/2006 →		90	24	063536550050	**MAN2045**
100 E 18 K tector, 100 E 18 DK tector	F4AE0681E	134	09/2000 → 08/2003		70	24	063535550050	**MAN2003**
100 E 18 K tector, 100 E 18 DK tector	F4AE0681E	134	09/2000 → 08/2003		90	24	063536550050	**MAN2045**
100 E 18 tector	F4AE0681D, F4AE0681E	134	09/2000 → 08/2003		70	24	063535550050	**MAN2003**
100 E 18 tector	F4AE0681D, F4AE0681E	134	09/2000 → 08/2003		90	24	063536550050	**MAN2045**
100 E 18 tector, 100 E 18 P tector, 100 E 18 FP tector	F4AE3481B	130	09/2006 →		70	24	063535550050	**MAN2003**
100 E 18 tector, 100 E 18 P tector, 100 E 18 FP tector	F4AE3481B	130	09/2006 →		90	24	063536550050	**MAN2045**
100 E 18 W tector, 100 E 18 WS tector	F4AE0681E, F4AE3681C	134	09/2000 → 08/2003		70	24	063535550050	**MAN2003**
100 E 18 W tector, 100 E 18 WS tector	F4AE0681E, F4AE3681C	134	09/2000 →		90	24	063536550050	**MAN2045**
100 E 21	8060.45.4100 TCA, 8060.45.4180	152	01/1991 → 11/2000		55	24	063534690480	**MAN2009**
100 E 21	8060.45.4100 TCA, 8060.45.4180	152	01/1991 → 11/2000		35	24	063534882530	**MAN2015**

		kW ÷ kW			A	V	LONG	SHORT
IVECO								
EuroCargo								
100 E 21 K tector, 100 E 21 DK tector	F4AE0681D	154	09/2000 → 08/2003		70	24	063535550050	**MAN2003**
100 E 21 K tector, 100 E 21 DK tector	F4AE0681D	154	09/2000 → 08/2003		90	24	063536550050	**MAN2045**
100 E 21 W tector, 100 E 21 WS tector	F4AE0681D	154	09/2000 → 08/2003		70	24	063535550050	**MAN2003**
100 E 21 W tector, 100 E 21 WS tector	F4AE0681D	154	09/2000 → 08/2003		90	24	063536550050	**MAN2045**
100 E 21, 100 E 21 DP tector, 100 E 22 tector	F4AE0681D, F4AE3681B	154 160	09/2000 → 08/2003		70	24	063535550050	**MAN2003**
100 E 21, 100 E 21 DP tector, 100 E 22 tector	F4AE0681D, F4AE3681B	154 160	09/2000 →		90	24	063536550050	**MAN2045**
100 E 22 K tector	F4AE3681B	160	09/2006 →		70	24	063535550050	**MAN2003**
100 E 22 K tector	F4AE3681B	160	09/2006 →		90	24	063536550050	**MAN2045**
100 E 22 W tector, 100 E 22 WS tector	F4AE3681B	160	09/2006 →		70	24	063535550050	**MAN2003**
100 E 22 W tector, 100 E 22 WS tector	F4AE3681B	160	09/2006 →		90	24	063536550050	**MAN2045**
110 E 22 tector, 110 E 22 P tector, 110 EL 22 P tector	F4AE3681B	160	09/2007 →		70	24	063535550050	**MAN2003**
110 E 22 tector, 110 E 22 P tector, 110 EL 22 P tector	F4AE3681B	160	09/2007 →		90	24	063536550050	**MAN2045**
110 E 22 W tector	F4AE3681B	160	09/2007 →		70	24	063535550050	**MAN2003**
110 E 22 W tector	F4AE3681B	160	09/2007 →		90	24	063536550050	**MAN2045**
110 E 22 WS tector	F4AE3681B	160	09/2007 →		70	24	063535550050	**MAN2003**
110 E 22 WS tector	F4AE3681B	160	09/2007 →		90	24	063536550050	**MAN2045**
110 E 25 W tector	F4AE3681D	185	09/2007 →		70	24	063535550050	**MAN2003**
110 E 25 W tector	F4AE3681D	185	09/2007 →		90	24	063536550050	**MAN2045**
110 E 25 WS tector	F4AE3681D	185	09/2007 →		70	24	063535550050	**MAN2003**
110 E 25 WS tector	F4AE3681D	185	09/2007 →		90	24	063536550050	**MAN2045**
120 E 15	8060.25R 4200, 8060.25R.4280	105	01/1991 →		35	24	063320060010	**MAN772**
120 E 15	8060.25R 4200, 8060.25R.4280	105	12/1991 → 07/2000		55	24	063534690480	**MAN2009**
120 E 15	8060.25R 4200, 8060.25R.4280	105	12/1991 → 07/2000		35	24	063534882530	**MAN2015**
120 E 15 K	8060.25R.4280	105	01/1992 →		35	24	063320060010	**MAN772**
120 E 15 K	8060.25R.4280	105	01/1992 → 07/2000		55	24	063534690480	**MAN2009**
120 E 15 K	8060.25R.4280	105	01/1992 → 07/2000		35	24	063534882530	**MAN2015**
120 E 18	8060.25V.4080	130	01/1992 →		35	24	063320060010	**MAN772**
120 E 18	8060.25V.4080	130	01/1992 → 07/2000		55	24	063534690480	**MAN2009**
120 E 18	8060.25V.4080	130	01/1992 → 07/2000		35	24	063534882530	**MAN2015**

		kW ÷ kW			A	V	LONG	SHORT
IVECO								
EuroCargo								
120 E 18 K	8060.25V.4080	130	01/1992 →		35	24	063320060010	**MAN772**
120 E 18 K	8060.25V.4080	130	01/1992 → 07/2000		55	24	063534690480	**MAN2009**
120 E 18 K	8060.25V.4080	130	01/1992 → 07/2000		35	24	063534882530	**MAN2015**
120 E 18 K tector	F4AE3481A	134	09/2006 →		70	24	063535550050	**MAN2003**
120 E 18 K tector	F4AE3481A	134	09/2006 →		90	24	063536550050	**MAN2045**
120 E 18 K tector, 120 E 18 DK tector	F4AE0681E	134	09/2000 →		35	24	063320060010	**MAN772**
120 E 18 K tector, 120 E 18 DK tector	F4AE0681E	134	09/2000 → 09/2005		70	24	063535550050	**MAN2003**
120 E 18 K tector, 120 E 18 DK tector	F4AE0681E	134	09/2000 → 08/2005		90	24	063536550050	**MAN2045**
120 E 18 tector, 120 E 18 D tector, 120 E 18 DP tector	F4AE0681D, F4AE0681E	134	09/2000 →		35	24	063320060010	**MAN772**
120 E 18 tector, 120 E 18 D tector, 120 E 18 DP tector	F4AE0681D, F4AE0681E	134	09/2000 → 09/2005		70	24	063535550050	**MAN2003**
120 E 18 tector, 120 E 18 D tector, 120 E 18 DP tector	F4AE0681D, F4AE0681E	134	09/2000 → 08/2005		90	24	063536550050	**MAN2045**
120 E 21 K tector	F4AE0681D	154	09/2003 → 08/2005		70	24	063535550050	**MAN2003**
120 E 21 K tector	F4AE0681D	154	09/2003 → 08/2005		90	24	063536550050	**MAN2045**
120 E 21 tector, 120 E 21 P tector, 120 E 21 FP tector	F4AE0681C, F4AE0681D, F4AE3681B	154 160	09/2003 → 08/2005		70	24	063535550050	**MAN2003**
120 E 21 tector, 120 E 21 P tector, 120 E 21 FP tector	F4AE0681C, F4AE0681D, F4AE3681B	154 160	09/2003 → 08/2005		90	24	063536550050	**MAN2045**
120 E 22 D tector, 120 E 22 P tector, 120 E 22 FP tector	F4AE3681B	160	09/2006 →		70	24	063535550050	**MAN2003**
120 E 22 D tector, 120 E 22 P tector, 120 E 22 FP tector	F4AE3681B	160	09/2006 →		90	24	063536550050	**MAN2045**
120 E 22 K tector	F4AE3681B	160	09/2006 →		70	24	063535550050	**MAN2003**
120 E 22 K tector	F4AE3681B	160	09/2006 →		90	24	063536550050	**MAN2045**
120 E 23	8060.45.6090, 8060.45S.6800	167	01/1992 →		35	24	063320060010	**MAN772**
120 E 23	8060.45.6090, 8060.45S.6800	167	01/1992 → 08/2000		80	24	063534681240	**MAN2006**
120 E 24 K tector, 120 E 24 DK tector	F4AE0681B	176	09/2000 →		35	24	063320060010	**MAN772**
120 E 24 K tector, 120 E 24 DK tector	F4AE0681B	176	09/2000 → 08/2005		70	24	063535550050	**MAN2003**

		kW ÷ kW		i	A	V	LONG	SHORT
IVECO								
EuroCargo								
120 E 24 K tector, 120 E 24 DK tector	F4AE0681B	176	09/2000 → 08/2005		90	24	063536550050	**MAN2045**
120 E 24, 120 E 24 DP tector, 120 E 25 tector	F4AE0681B, F4AE3681D	176 185	09/2000 →		35	24	063320060010	**MAN772**
120 E 24, 120 E 24 DP tector, 120 E 25 tector	F4AE0681B, F4AE3681D	176 185	09/2000 → 09/2005		70	24	063535550050	**MAN2003**
120 E 24, 120 E 24 DP tector, 120 E 25 tector	F4AE0681B, F4AE3681D	176 185	09/2000 →		90	24	063536550050	**MAN2045**
120 E 25 K tector	F4AE3681D	185	09/2006 →		70	24	063535550050	**MAN2003**
120 E 25 K tector	F4AE3681D	185	09/2006 →		90	24	063536550050	**MAN2045**
120 E 28 tector	F4AE0681A, F4AE3681E	202 205	09/2000 →		35	24	063320060010	**MAN772**
120 E 28 tector	F4AE0681A, F4AE3681E	202 205	09/2000 → 09/2005		70	24	063535550050	**MAN2003**
120 E 28 tector	F4AE0681A, F4AE3681E	202 205	09/2000 →		90	24	063536550050	**MAN2045**
120 E28 K tector	F4AE0681A, F4AE3681E	202 205	09/2000 →		35	24	063320060010	**MAN772**
120 E28 K tector	F4AE0681A, F4AE3681E	202 205	09/2000 → 09/2005		70	24	063535550050	**MAN2003**
120 E28 K tector	F4AE0681A, F4AE3681E	202 205	09/2000 →		90	24	063536550050	**MAN2045**
120 EL 17, 120 EL 17 P tector, 120 E 18, 120 EL 18 tector	F4AE0481A, F4AE3481A	125 134	09/2000 → 09/2005		70	24	063535550050	**MAN2003**
120 EL 17, 120 EL 17 P tector, 120 E 18, 120 EL 18 tector	F4AE0481A, F4AE3481A	125 134	09/2000 →		90	24	063536550050	**MAN2045**
120 EL 21, 120 EL 21 P tector, 120 E 22, 120 EL 22 tector	F4AE0681C, F4AE0681D, F4AE3681B	154 160	09/2000 →		70	24	063535550050	**MAN2003**
120 EL 21, 120 EL 21 P tector, 120 E 22, 120 EL 22 tector	F4AE0681C, F4AE0681D, F4AE3681B	154 160	09/2000 →		90	24	063536550050	**MAN2045**
130 E 15	8060.25R.4280	105	01/1994 →		35	24	063320060010	**MAN772**
130 E 15	8060.25R.4280	105	01/1994 → 07/2000		55	24	063534690480	**MAN2009**
130 E 15	8060.25R.4280	105	01/1994 → 07/2000		35	24	063534882530	**MAN2015**
130 E 15 K	8060.25R.4280	105	01/1994 →		35	24	063320060010	**MAN772**
130 E 15 K	8060.25R.4280	105	01/1994 → 07/2000		55	24	063534690480	**MAN2009**
130 E 18	8060.25V.4080	130	01/1992 →		35	24	063320060010	**MAN772**
130 E 18	8060.25V.4080	130	01/1992 → 07/2000		55	24	063534690480	**MAN2009**
130 E 18	8060.25V.4080	130	01/1992 → 07/2000		35	24	063534882530	**MAN2015**
130 E 18 D tector, 130 E 18 DP tector	F4AE3481A	134	09/2006 →		70	24	063535550050	**MAN2003**

		kW ÷ kW		i	A	V	MAGNETI MARELLI LONG	MAGNETI MARELLI SHORT
IVECO								
EuroCargo								
130 E 18 D tector, 130 E 18 DP tector	F4AE3481A	134	09/2006 →		90	24	063536550050	**MAN2045**
130 E 18 K	8060.25V.4080	130	01/1992 →		35	24	063320060010	**MAN772**
130 E 18 K	8060.25V.4080	130	01/1992 → 07/2000		55	24	063534690480	**MAN2009**
130 E 18 K	8060.25V.4080	130	01/1992 → 07/2000		35	24	063534882530	**MAN2015**
130 E 18 K tector, 130 E 18 DK tector	F4AE0681E	134	09/2000 →		35	24	063320060010	**MAN772**
130 E 18 K tector, 130 E 18 DK tector	F4AE0681E	134	09/2000 → 09/2005		70	24	063535550050	**MAN2003**
130 E 18 K tector, 130 E 18 DK tector	F4AE0681E	134	09/2000 → 08/2005		90	24	063536550050	**MAN2045**
130 E 18 tector, 130 E 18 D tector, 130 E 18 DP tector	F4AE0681D, F4AE0681E	134	09/2000 →		35	24	063320060010	**MAN772**
130 E 18 tector, 130 E 18 D tector, 130 E 18 DP tector	F4AE0681D, F4AE0681E	134	09/2000 → 09/2005		70	24	063535550050	**MAN2003**
130 E 18 tector, 130 E 18 D tector, 130 E 18 DP tector	F4AE0681D, F4AE0681E	134	09/2000 → 08/2005		90	24	063536550050	**MAN2045**
130 E 21 K tector	F4AE0681D	154	09/2003 → 08/2005		70	24	063535550050	**MAN2003**
130 E 21 K tector	F4AE0681D	154	09/2003 → 08/2005		90	24	063536550050	**MAN2045**
130 E 21 tector, 130 E21 P tector, 130 E 21 FP tector	F4AE0681C, F4AE0681D	154	09/2003 → 08/2005		70	24	063535550050	**MAN2003**
130 E 21 tector, 130 E21 P tector, 130 E 21 FP tector	F4AE0681C, F4AE0681D	154	09/2003 → 08/2005		90	24	063536550050	**MAN2045**
130 E 23	8060.45.6090, 8060.45S.6000	167	01/1992 →		35	24	063320060010	**MAN772**
130 E 23	8060.45.6090, 8060.45S.6000	167	04/1992 → 07/2000		80	24	063534681240	**MAN2006**
130 E 24 K tector, 130 E 24 DK tector	F4AE0681B	176	09/2000 →		35	24	063320060010	**MAN772**
130 E 24 K tector, 130 E 24 DK tector	F4AE0681B	176	09/2000 → 09/2005		70	24	063535550050	**MAN2003**
130 E 24 K tector, 130 E 24 DK tector	F4AE0681B	176	09/2000 → 08/2005		90	24	063536550050	**MAN2045**
130 E 24 tector, 130 E 24 D tector, 130 E 24 DP tector	F4AE0681B	176	09/2000 →		35	24	063320060010	**MAN772**
130 E 24 tector, 130 E 24 D tector, 130 E 24 DP tector	F4AE0681B	176	09/2000 → 09/2005		70	24	063535550050	**MAN2003**

		kW ÷ kW		i	A	V	MAGNETI MARELLI LONG	MAGNETI MARELLI SHORT
IVECO								
EuroCargo								
130 E 24 tector, 130 E 24 D tector, 130 E 24 DP tector	F4AE0681B	176	09/2000 → 08/2005		90	24	063536550050	**MAN2045**
130 E 25 D tector, 130 E 25 DP tector	F4AE3681D	185	09/2006 →		70	24	063535550050	**MAN2003**
130 E 25 D tector, 130 E 25 DP tector	F4AE3681D	185	09/2006 →		90	24	063536550050	**MAN2045**
130 E 25 DK tector	F4AE3681D	185	09/2006 →		70	24	063535550050	**MAN2003**
130 E 25 DK tector	F4AE3681D	185	09/2006 →		90	24	063536550050	**MAN2045**
130 E 28 K tector	F4AE0681A	202	09/2000 →		35	24	063320060010	**MAN772**
130 E 28 K tector	F4AE0681A	202	09/2000 → 09/2005		70	24	063535550050	**MAN2003**
130 E 28 K tector	F4AE0681A	202	09/2000 → 08/2005		90	24	063536550050	**MAN2045**
130 E 28 tector	F4AE0681A	202	09/2000 →		35	24	063320060010	**MAN772**
130 E 28 tector	F4AE0681A	202	09/2000 → 09/2005		70	24	063535550050	**MAN2003**
130 E 28 tector	F4AE0681A	202	09/2000 → 08/2005		90	24	063536550050	**MAN2045**
135 E 18 W	8060.25V.4800	130	01/1997 → 07/2000		55	24	063534690480	**MAN2009**
135 E 18 W	8060.25V.4800	130	01/1997 → 07/2000		35	24	063534882530	**MAN2015**
135 E 18 WR	8060.25V.4800	130	01/1994 → 12/1996		55	24	063534690480	**MAN2009**
135 E 18 WR	8060.25V.4800	130	01/1994 → 12/1996		35	24	063534882530	**MAN2015**
135 E 23 W	8060.45S TCA	167	01/1997 → 07/2000		80	24	063534681240	**MAN2006**
135 E 23 WR	8060.45S TCA	167	01/1994 → 12/1996		80	24	063534681240	**MAN2006**
140 E 18 K	F4AE0681E	134	05/2005 → 08/2005		70	24	063535550050	**MAN2003**
140 E 18 K	F4AE0681E	134	05/2005 → 08/2005		90	24	063536550050	**MAN2045**
140 E 18 K tector, 140 E 18 DK tector	F4AE3481A	134	09/2006 →		70	24	063535550050	**MAN2003**
140 E 18 K tector, 140 E 18 DK tector	F4AE3481A	134	09/2006 →		90	24	063536550050	**MAN2045**
140 E 18 tector, 140 E 18 P tector, 140 E 18 D FP tector	F4AE3481A	134	09/2006 →		70	24	063535550050	**MAN2003**
140 E 18 tector, 140 E 18 P tector, 140 E 18 D FP tector	F4AE3481A	134	09/2006 →		90	24	063536550050	**MAN2045**
140 E 18 W tector	F4AE0681E	134	09/2000 → 09/2005		70	24	063535550050	**MAN2003**
140 E 18 W tector	F4AE0681E	134	09/2000 → 08/2005		90	24	063536550050	**MAN2045**
140 E 18, 140 E 18 P, 140 E 18 FP	F4AE0681E	134	05/2005 → 08/2005		70	24	063535550050	**MAN2003**
140 E 18, 140 E 18 P, 140 E 18 FP	F4AE0681E	134	05/2005 → 08/2005		90	24	063536550050	**MAN2045**
140 E 21 K	F4AE0681D	154	05/2005 → 08/2005		70	24	063535550050	**MAN2003**
140 E 21 K	F4AE0681D	154	05/2005 → 08/2005		90	24	063536550050	**MAN2045**
140 E 21 tector, 140 E 21 P, 140 E 21 FP	F4AE0681C, F4AE0681D	154	03/2005 → 08/2005		70	24	063535550050	**MAN2003**
140 E 21 tector, 140 E 21 P, 140 E 21 FP	F4AE0681C, F4AE0681D	154	03/2005 → 08/2005		90	24	063536550050	**MAN2045**

		kW ÷ kW			A	V	LONG	SHORT
IVECO								
EuroCargo								
140 E 22 K tector	F4AE3681B	160	09/2006 →		70	24	063535550050	**MAN2003**
140 E 22 K tector	F4AE3681B	160	09/2006 →		90	24	063536550050	**MAN2045**
140 E 22 tector, 140 E 22 P tector, 140 E 22 D FP tector	F4AE3681B	160	09/2006 →		70	24	063535550050	**MAN2003**
140 E 22 tector, 140 E 22 P tector, 140 E 22 D FP tector	F4AE3681B	160	09/2006 →		90	24	063536550050	**MAN2045**
140 E 24 K tector	F4AE0681B	176	09/2003 → 08/2005		70	24	063535550050	**MAN2003**
140 E 24 K tector	F4AE0681B	176	09/2003 → 08/2005		90	24	063536550050	**MAN2045**
140 E 24 tector, 14 E 24 P tector, 140 E 24 FP tector	F4AE0681B	176	09/2003 → 08/2005		70	24	063535550050	**MAN2003**
140 E 24 tector, 14 E 24 P tector, 140 E 24 FP tector	F4AE0681B	176	09/2003 → 08/2005		90	24	063536550050	**MAN2045**
140 E 24 W tector, 140 E 24 WS tector	F4AE0681B	176	09/2000 → 08/2003		70	24	063535550050	**MAN2003**
140 E 24 W tector, 140 E 24 WS tector	F4AE0681B	176	09/2000 → 08/2005		90	24	063536550050	**MAN2045**
140 E 25 K tector, 140 E 25 DK tector	F4AE3681D	185	09/2006 →		70	24	063535550050	**MAN2003**
140 E 25 K tector, 140 E 25 DK tector	F4AE3681D	185	09/2006 →		90	24	063536550050	**MAN2045**
140 E 25 W tector, 140 E 25 WS tector	F4AE3681D	185	09/2006 →		70	24	063535550050	**MAN2003**
140 E 25 W tector, 140 E 25 WS tector	F4AE3681D	185	09/2006 →		90	24	063536550050	**MAN2045**
140 E 28 K tector	F4AE0681A, F4AE3681E	202 205	09/2006 →		70	24	063535550050	**MAN2003**
140 E 28 K tector	F4AE0681A, F4AE3681E	202 205	09/2006 →		90	24	063536550050	**MAN2045**
140 E 28 tector, 140 E 28 P tector, 140 E 28 FP tector	F4AE0681A, F4AE3681E	202 205	09/2006 →		70	24	063535550050	**MAN2003**
140 E 28 tector, 140 E 28 P tector, 140 E 28 FP tector	F4AE0681A, F4AE3681E	202 205	09/2006 →		90	24	063536550050	**MAN2045**
140 E 28 W tector, 140 E 28 WS tector	F4AE3681E	205	09/2006 →		70	24	063535550050	**MAN2003**
140 E 28 W tector, 140 E 28 WS tector	F4AE3681E	205	09/2006 →		90	24	063536550050	**MAN2045**
140 E D 25 tector, 140 E 25 P tector, 140 E 25 FP tector	F4AE3681D	185	09/2006 →		70	24	063535550050	**MAN2003**

		kW ÷ kW		i	A	V	LONG	SHORT
IVECO								
EuroCargo								
140 E D 25 tector, 140 E 25 P tector, 140 E 25 FP tector	F4AE3681D	185	09/2006 →		90	24	063536550050	**MAN2045**
150 E 15	8060.25R.4280	105	01/1992 → 12/1996		35	24	063320060010	**MAN772**
150 E 15	8060.25R.4280	105	01/1992 → 12/1996		55	24	063534690480	**MAN2009**
150 E 15	8060.25R.4280	105	01/1992 → 12/1996		35	24	063534882530	**MAN2015**
150 E 15 K	8060.25R.4280	105	01/1992 → 12/1996		35	24	063320060010	**MAN772**
150 E 15 K	8060.25R.4280	105	01/1992 → 12/1996		55	24	063534690480	**MAN2009**
150 E 15 K	8060.25R.4280	105	01/1992 → 12/1996		35	24	063534882530	**MAN2015**
150 E 18	8060.25V.4000, 8060.25V.4080	130	01/1992 →		35	24	063320060010	**MAN772**
150 E 18	8060.25V.4000, 8060.25V.4080	130	01/1992 → 07/2000		55	24	063534690480	**MAN2009**
150 E 18	8060.25V.4000, 8060.25V.4080	130	01/1992 → 07/2000		35	24	063534882530	**MAN2015**
150 E 18 K	8060.25V.4000, 8060.25V.4080	130	01/1992 →		35	24	063320060010	**MAN772**
150 E 18 K	8060.25V.4000, 8060.25V.4080	130	01/1992 → 07/2000		55	24	063534690480	**MAN2009**
150 E 18 K	8060.25V.4000, 8060.25V.4080	130	01/1992 → 07/2000		35	24	063534882530	**MAN2015**
150 E 18 K tector	F4AE0681E	134	09/2000 →		35	24	063320060010	**MAN772**
150 E 18 K tector	F4AE0681E	134	09/2000 → 08/2003		70	24	063535550050	**MAN2003**
150 E 18 K tector	F4AE3481A	134	09/2006 →		70	24	063535550050	**MAN2003**
150 E 18 K tector	F4AE0681E	134	09/2000 → 08/2005		90	24	063536550050	**MAN2045**
150 E 18 K tector	F4AE3481A	134	09/2006 →		90	24	063536550050	**MAN2045**
150 E 18 tector	F4AE0681E	134	09/2000 →		35	24	063320060010	**MAN772**
150 E 18 tector	F4AE0681E	134	09/2000 → 08/2003		70	24	063535550050	**MAN2003**
150 E 18 tector	F4AE0681E	134	09/2000 → 08/2005		90	24	063536550050	**MAN2045**
150 E 18 tector, 150 E 18 P tector, 150 E 18 FP tector	F4AE3481A	134	09/2006 →		70	24	063535550050	**MAN2003**
150 E 18 tector, 150 E 18 P tector, 150 E 18 FP tector	F4AE3481A	134	09/2006 →		90	24	063536550050	**MAN2045**
150 E 21 K tector	F4AE0681D	154	09/2003 → 08/2005		70	24	063535550050	**MAN2003**
150 E 21 K tector	F4AE0681D	154	09/2003 → 08/2005		90	24	063536550050	**MAN2045**
150 E 21 tector, 150 E 21 P tector, 150 E 21 FP tector	F4AE0681C, F4AE0681D	154	09/2003 → 08/2005		70	24	063535550050	**MAN2003**
150 E 21 tector, 150 E 21 P tector, 150 E 21 FP tector	F4AE0681C, F4AE0681D	154	09/2003 → 08/2005		90	24	063536550050	**MAN2045**

		kW ÷ kW			A	V	LONG	SHORT
IVECO								
EuroCargo								
150 E 22 K tector	F4AE3681B	160	09/2006 →		70	24	063535550050	**MAN2003**
150 E 22 K tector	F4AE3681B	160	09/2006 →		90	24	063536550050	**MAN2045**
150 E 22 tector, 150 E 22 P tector, 150 E 22 FP tector	F4AE3681B	160	09/2006 →		70	24	063535550050	**MAN2003**
150 E 22 tector, 150 E 22 P tector, 150 E 22 FP tector	F4AE3681B	160	09/2006 →		90	24	063536550050	**MAN2045**
150 E 23	8060.45.6090, 8060.45S.6800	167	01/1992 →		35	24	063320060010	**MAN772**
150 E 23	8060.45.6090, 8060.45S.6800	167	01/1992 → 07/2000		80	24	063534681240	**MAN2006**
150 E 24 K tector	F4AE0681B	176	09/2000 →		35	24	063320060010	**MAN772**
150 E 24 K tector	F4AE0681B	176	09/2000 → 08/2005		70	24	063535550050	**MAN2003**
150 E 24 K tector	F4AE0681B	176	09/2000 → 08/2005		90	24	063536550050	**MAN2045**
150 E 24 tector, 150 E 25 tector	F4AE0681B, F4AE3681D	176 185	09/2000 →		35	24	063320060010	**MAN772**
150 E 24 tector, 150 E 25 tector	F4AE0681B, F4AE3681D	176 185	09/2000 → 08/2005		70	24	063535550050	**MAN2003**
150 E 24 tector, 150 E 25 tector	F4AE0681B, F4AE3681D	176 185	09/2000 →		90	24	063536550050	**MAN2045**
150 E 25 K tector	F4AE3681D	185	09/2006 →		70	24	063535550050	**MAN2003**
150 E 25 K tector	F4AE3681D	185	09/2006 →		90	24	063536550050	**MAN2045**
150 E 25 W tector	F4AE3681D	185	09/2006 →		70	24	063535550050	**MAN2003**
150 E 25 W tector	F4AE3681D	185	09/2006 →		90	24	063536550050	**MAN2045**
150 E 25 WS tector	F4AE3681D	185	09/2006 →		70	24	063535550050	**MAN2003**
150 E 25 WS tector	F4AE3681D	185	09/2006 →		90	24	063536550050	**MAN2045**
150 E 27, 150 E 27 R	8360.46.417 TCA	196	01/1992 →		35	24	063320060010	**MAN772**
150 E 27, 150 E 27 R	8360.46.417 TCA	196	01/1992 → 07/2000		80	24	063534681240	**MAN2006**
150 E 27, 150 E 27 R	8360.46.417 TCA	196	01/1992 → 07/2000		120	24	063536895380	**MAN2004**
150 E 28 K tector	F4AE0681A, F4AE3681E	202 205	09/2000 →		35	24	063320060010	**MAN772**
150 E 28 K tector	F4AE0681A, F4AE3681E	202 205	09/2000 → 08/2005		70	24	063535550050	**MAN2003**
150 E 28 K tector	F4AE0681A, F4AE3681E	202 205	09/2000 →		90	24	063536550050	**MAN2045**
150 E 28 tector	F4AE0681A, F4AE3681E	202 205	09/2000 →		35	24	063320060010	**MAN772**
150 E 28 tector	F4AE0681A, F4AE3681E	202 205	09/2000 → 08/2005		70	24	063535550050	**MAN2003**
150 E 28 tector	F4AE0681A, F4AE3681E	202 205	09/2000 → 08/2005		90	24	063536550050	**MAN2045**
150 E 28 W tector	F4AE3681E	202 205	09/2006 →		70	24	063535550050	**MAN2003**
150 E 28 W tector	F4AE3681E	202 205	09/2006 →		90	24	063536550050	**MAN2045**

		kW ÷ kW		i	A	V	MAGNETI MARELLI LONG	MAGNETI MARELLI SHORT
IVECO								
EuroCargo								
150 E 28 WS tector	F4AE3681E	205	09/2006 →		70	24	063535550050	**MAN2003**
150 E 28 WS tector	F4AE3681E	205	09/2006 →		90	24	063536550050	**MAN2045**
150 E 30 K tector	F4AE0681A, F4AE3681A	220	09/2006 →		70	24	063535550050	**MAN2003**
150 E 30 K tector	F4AE0681A, F4AE3681A	220	09/2006 →		90	24	063536550050	**MAN2045**
150 E 30 tector, 150 E 30 P tector, 150 E 30 FP tector	F4AE0681A, F4AE3681A	220	09/2006 →		70	24	063535550050	**MAN2003**
150 E 30 tector, 150 E 30 P tector, 150 E 30 FP tector	F4AE0681A, F4AE3681A	220	09/2006 →		90	24	063536550050	**MAN2045**
160 E 18 K tector	F4AE3481A	134	09/2006 →		70	24	063535550050	**MAN2003**
160 E 18 K tector	F4AE3481A	134	09/2006 →		90	24	063536550050	**MAN2045**
160 E 18 tector, 160 E 18 P tector	F4AE3481A	134	09/2006 →		70	24	063535550050	**MAN2003**
160 E 18 tector, 160 E 18 P tector	F4AE3481A	134	09/2006 →		90	24	063536550050	**MAN2045**
160 E 21 tector, 160 E 21 P tector	F4AE0681C, F4AE0681D	154	09/2003 → 08/2005		70	24	063535550050	**MAN2003**
160 E 21 tector, 160 E 21 P tector	F4AE0681C, F4AE0681D	154	09/2003 → 08/2005		90	24	063536550050	**MAN2045**
160 E 22 K tector	F4AE3681B	160	09/2006 →		70	24	063535550050	**MAN2003**
160 E 22 K tector	F4AE3681B	160	09/2006 →		90	24	063536550050	**MAN2045**
160 E 22 tector, 160 E 22 P tector	F4AE3681B	160	09/2006 →		70	24	063535550050	**MAN2003**
160 E 22 tector, 160 E 22 P tector	F4AE3681B	160	09/2006 →		90	24	063536550050	**MAN2045**
160 E 24 tector, 160 E 24 P tector	F4AE0681B	176 177	09/2003 → 08/2005		70	24	063535550050	**MAN2003**
160 E 24 tector, 160 E 24 P tector	F4AE0681B	176 177	09/2003 → 08/2005		90	24	063536550050	**MAN2045**
160 E 25 K tector	F4AE3681D	185	09/2006 →		70	24	063535550050	**MAN2003**
160 E 25 K tector	F4AE3681D	185	09/2006 →		90	24	063536550050	**MAN2045**
160 E 25 tector, 160 E 25 P tector	F4AE3681D	185	09/2006 →		70	24	063535550050	**MAN2003**
160 E 25 tector, 160 E 25 P tector	F4AE3681D	185	09/2006 →		90	24	063536550050	**MAN2045**
160 E 28 K tector	F4AE3681E	205	09/2006 →		70	24	063535550050	**MAN2003**
160 E 28 K tector	F4AE3681E	205	09/2006 →		90	24	063536550050	**MAN2045**
160 E 28 tector, 160 E 28 P tector	F4AE0681A, F4AE3681E	202 205	09/2003 →		70	24	063535550050	**MAN2003**
160 E 28 tector, 160 E 28 P tector	F4AE0681A, F4AE3681E	202 205	09/2003 →		90	24	063536550050	**MAN2045**

		kW ÷ kW			A	V	LONG	SHORT
IVECO								
EuroCargo								
160 E 30 K tector	F4AE0681A, F4AE3681A	220	09/2006 →		70	24	063535550050	**MAN2003**
160 E 30 K tector	F4AE0681A, F4AE3681A	220	09/2006 →		90	24	063536550050	**MAN2045**
160 E 30 tector, 160 E 30 P tector	F4AE0681A, F4AE3681A	220	09/2006 →		70	24	063535550050	**MAN2003**
160 E 30 tector, 160 E 30 P tector	F4AE0681A, F4AE3681A	220	09/2006 →		90	24	063536550050	**MAN2045**
170 E 18 K, 180 E 18 K	8060.25V.4800	130	01/1994 → 07/2000		55	24	063534690480	**MAN2009**
170 E 18 K, 180 E 18 K	8060.25V.4800	130	01/1994 → 07/2000		35	24	063534882530	**MAN2015**
170 E 18, 180 E 18	8060.25V.4800	130	01/1994 → 07/2000		55	24	063534690480	**MAN2009**
170 E 18, 180 E 18	8060.25V.4800	130	01/1994 → 07/2000		35	24	063534882530	**MAN2015**
170 E 23 K,180 E 23 K	8060.45S TCA	167	01/1994 → 07/2000		80	24	063534681240	**MAN2006**
170 E 23,180 E 23	8060.45S TCA	167	01/1994 → 07/2000		80	24	063534681240	**MAN2006**
170 E 27,180 E 27	8360.46.417 TCA	196	01/1994 → 07/2000		80	24	063534681240	**MAN2006**
170 E 27,180 E 27	8360.46.417 TCA	196	01/1994 → 07/2000		120	24	063536895380	**MAN2004**
180 E 21 K tector	F4AE0681D	154	09/2000 → 08/2005		70	24	063535550050	**MAN2003**
180 E 21 K tector	F4AE0681D	154	09/2000 → 08/2005		90	24	063536550050	**MAN2045**
180 E 21 T	8060.45.4100 TCA	152	04/1992 → 07/2000		55	24	063534690480	**MAN2009**
180 E 21 T	8060.45.4100 TCA	152	04/1992 → 07/2000		35	24	063534882530	**MAN2015**
180 E 21 tector	F4AE0681C, F4AE0681D	154	09/2000 → 08/2005		70	24	063535550050	**MAN2003**
180 E 21 tector	F4AE0681C, F4AE0681D	154	09/2000 → 08/2005		90	24	063536550050	**MAN2045**
180 E 22 tector, 160 E 22 P tector	F4AE3681B	160	09/2006 →		70	24	063535550050	**MAN2003**
180 E 22 tector, 160 E 22 P tector	F4AE3681B	160	09/2006 →		90	24	063536550050	**MAN2045**
180 E 24 K tector	F4AE0681B	176	09/2000 → 08/2005		70	24	063535550050	**MAN2003**
180 E 24 K tector	F4AE0681B	176	09/2000 → 08/2005		90	24	063536550050	**MAN2045**
180 E 24, 180 E 25 tector	F4AE0681B, F4AE3681D	176 185	09/2000 → 08/2005		70	24	063535550050	**MAN2003**
180 E 24, 180 E 25 tector	F4AE0681B, F4AE3681D	176 185	09/2000 →		90	24	063536550050	**MAN2045**
180 E 25 K tector	F4AE3681D	185	09/2006 →		70	24	063535550050	**MAN2003**
180 E 25 K tector	F4AE3681D	185	09/2006 →		90	24	063536550050	**MAN2045**
180 E 28 K tector	F4AE0681A, F4AE3681E	202 205	09/2000 → 08/2005		70	24	063535550050	**MAN2003**
180 E 28 K tector	F4AE0681A, F4AE3681E	202 205	09/2000 →		90	24	063536550050	**MAN2045**
180 E 28 tector, 180 E 28 P tector	F4AE0681A, F4AE3681E	202 205	09/2000 → 08/2005		70	24	063535550050	**MAN2003**
180 E 28 tector, 180 E 28 P tector	F4AE0681A, F4AE3681E	202 205	09/2000 →		90	24	063536550050	**MAN2045**

		kW ÷ kW		i	A	V	LONG	SHORT
IVECO								
EuroCargo								
180 E 30 K tector	F4AE0681A, F4AE3681A	220	09/2006 →		70	24	063535550050	**MAN2003**
180 E 30 K tector	F4AE0681A, F4AE3681A	220	09/2006 →		90	24	063536550050	**MAN2045**
180 E 30 tector, 180 E 30 P tector	F4AE0681A, F4AE3681A	220	08/2006 →		70	24	063535550050	**MAN2003**
180 E 30 tector, 180 E 30 P tector	F4AE0681A, F4AE3681A	220	08/2006 →		90	24	063536550050	**MAN2045**
260 E 23	8060.45S TCA, 8060.45S.6000	167	12/1991 → 07/2000		80	24	063534681240	**MAN2006**
260 E 23 KE		167	12/1991 → 07/2000		80	24	063534681240	**MAN2006**
260 E 23 T	8060.45S TCA, 8060.45S.6000	167	01/1992 → 07/2000		80	24	063534681240	**MAN2006**
260 E 27 KE	8360.46.417, 8360.46.417 TCA	196	09/1991 → 07/2000		80	24	063534681240	**MAN2006**
260 E 27 KE	8360.46.417, 8360.46.417 TCA	196	09/1991 → 07/2000		120	24	063536895380	**MAN2004**
280 E 23	8060.45S TCA, 8060.45S.6000	167	12/1991 → 11/2000		80	24	063534681240	**MAN2006**
280 E 23 T	8060.45S.6000	167	01/1992 → 08/2000		80	24	063534681240	**MAN2006**
320 E 27	8360.46.417, 8360.46.417 TCA	196	10/1991 → 08/2000		80	24	063534681240	**MAN2006**
320 E 27	8360.46.417, 8360.46.417 TCA	196	10/1991 → 08/2000		120	24	063536895380	**MAN2004**
320 E 27 T	8360.46.417	196	01/1992 → 08/2000		80	24	063534681240	**MAN2006**
320 E 27 T	8360.46.417	196	01/1992 → 08/2000		120	24	063536895380	**MAN2004**
320 E 28 T tector	F4AE0681A	202	09/2000 → 08/2003		70	24	063535550050	**MAN2003**
320 E 28 T tector	F4AE0681A	202	09/2000 → 08/2003		90	24	063536550050	**MAN2045**
320 E 28 tector	F4AE0681A	202	09/2000 → 08/2003		70	24	063535550050	**MAN2003**
320 E 28 tector	F4AE0681A	202	09/2000 → 08/2003		90	24	063536550050	**MAN2045**
60 E 10	8040.25B.4200	75	01/1991 → 08/1996		35	24	063320060010	**MAN772**
60 E 10	8040.25B.4200	75	01/1991 → 05/1996		55	24	063534690480	**MAN2009**
60 E 10	8040.25B.4200	75	01/1991 → 08/1996		35	24	063534882530	**MAN2015**
60 E 12	8040.25X.4000	85	01/1991 → 12/1996		35	24	063320060010	**MAN772**
60 E 12	8040.25X.4000	85	01/1991 → 05/1996		55	24	063534690480	**MAN2009**
60 E 14	8040.45.4000	100	01/1991 → 12/1996		35	24	063320060010	**MAN772**
60 E 14	8040.45.4000	100	01/1991 → 05/1996		55	24	063534690480	**MAN2009**
60 E 14	8040.45.4000	100	01/1991 → 12/1996		35	24	063534882530	**MAN2015**
60 E 14 K	8040.45.4000	100	01/1991 → 12/1996		35	24	063320060010	**MAN772**
60 E 14 K	8040.45.4000	100	01/1991 → 05/1996		55	24	063534690480	**MAN2009**
60 E 14 K	8040.45.4000	100	01/1991 → 12/1996		35	24	063534882530	**MAN2015**

		kW ÷ kW		i	A	V	LONG	SHORT
IVECO								
EuroCargo								
60 E 14 K tector	F4AE3481C	103	05/2009 →		70	24	063535550050	**MAN2003**
60 E 14 K tector	F4AE3481C	103	05/2009 →		90	24	063536550050	**MAN2045**
60 E 14 tector, 60 E 14 P tector	F4AE3481C	103	05/2009 →		70	24	063535550050	**MAN2003**
60 E 14 tector, 60 E 14 P tector	F4AE3481C	103	05/2009 →		90	24	063536550050	**MAN2045**
60 E 16 K tector	F4AE3481D	118	05/2009 →		70	24	063535550050	**MAN2003**
60 E 16 K tector	F4AE3481D	118	05/2009 →		90	24	063536550050	**MAN2045**
60 E 16 tector, 60 E 16 P tector	F4AE3481D	118	05/2009 →		70	24	063535550050	**MAN2003**
60 E 16 tector, 60 E 16 P tector	F4AE3481D	118	05/2009 →		90	24	063536550050	**MAN2045**
65 E 10	8040.25B.4200	75	01/1991 → 12/1996		35	24	063320060010	**MAN772**
65 E 10	8040.25B.4200	75	01/1991 → 05/1996		55	24	063534690480	**MAN2009**
65 E 10	8040.25B.4200	75	01/1991 → 12/1996		35	24	063534882530	**MAN2015**
65 E 10 K	8040.25B.4200	75	01/1991 → 12/1996		35	24	063320060010	**MAN772**
65 E 10 K	8040.25B.4200	75	01/1991 → 05/1996		55	24	063534690480	**MAN2009**
65 E 10 K	8040.25B.4200	75	01/1991 → 12/1996		35	24	063534882530	**MAN2015**
65 E 12	8040.25X.4000	85	01/1991 → 12/2000		35	24	063320060010	**MAN772**
65 E 12	8040.25X.4000	85	01/1991 → 05/1996		55	24	063534690480	**MAN2009**
65 E 12 K	8040.25X.4000	85	01/1991 → 12/2000		35	24	063320060010	**MAN772**
65 E 12 K	8040.25X.4000	85	01/1991 → 05/1996		55	24	063534690480	**MAN2009**
65 E 13 K tector	F4AE0481D	95	09/2000 → 08/2005		70	24	063535550050	**MAN2003**
65 E 13 K tector	F4AE0481D	95	09/2000 → 08/2005		90	24	063536550050	**MAN2045**
65 E 14	8040.45.4000	100	01/1991 → 12/2000		35	24	063320060010	**MAN772**
65 E 14	8040.45.4000	100	01/1991 → 06/1996		55	24	063534690480	**MAN2009**
65 E 14 K	8040.45.4000	100	01/1991 → 12/2000		35	24	063320060010	**MAN772**
65 E 14 K	8040.45.4000	100	01/1991 → 06/1996		55	24	063534690480	**MAN2009**
65 E 14 K tector	F4AE3481C	103	05/2010 →		70	24	063535550050	**MAN2003**
65 E 14 K tector	F4AE3481C	103	05/2010 →		90	24	063536550050	**MAN2045**
65 E 14 tector, 65 E 14 P tector	F4AE3481C	103	05/2010 →		70	24	063535550050	**MAN2003**
65 E 14 tector, 65 E 14 P tector	F4AE3481C	103	05/2010 →		90	24	063536550050	**MAN2045**
65 E 15 tector, 65 E 15 P tector	F4AE0481C	110	09/2000 →		35	24	063320060010	**MAN772**
65 E 15 tector, 65 E 15 P tector	F4AE0481C	110	09/2000 → 08/2003		70	24	063535550050	**MAN2003**
65 E 15 tector, 65 E 15 P tector	F4AE0481C	110	09/2000 → 08/2003		90	24	063536550050	**MAN2045**
65 E 16 K tector	F4AE3481D	118	05/2010 →		70	24	063535550050	**MAN2003**
65 E 16 K tector	F4AE3481D	118	05/2010 →		90	24	063536550050	**MAN2045**

		kW ÷ kW		i	A	V	LONG	SHORT
IVECO								
EuroCargo								
65 E 16 tector, 65 E 16 P tector	F4AE3481D	118	05/2010 →		70	24	063535550050	**MAN2003**
65 E 16 tector, 65 E 16 P tector	F4AE3481D	118	05/2010 →		90	24	063536550050	**MAN2045**
65 E15	F4AE0481C	110	09/2000 →		35	24	063320060010	**MAN772**
65 E15	F4AE0481C	110	09/2000 → 08/2003		70	24	063535550050	**MAN2003**
65 E15	F4AE0481C	110	09/2000 → 08/2003		90	24	063536550050	**MAN2045**
75 E 12	8040.25X.4000	85	01/1991 → 12/2000		35	24	063320060010	**MAN772**
75 E 12	8040.25X.4000	85	01/1991 → 05/1996		55	24	063534690480	**MAN2009**
75 E 12 K	8040.25X.4000	85	01/1997 →		35	24	063320060010	**MAN772**
75 E 13 K tector	F4AE0481D	95	09/2003 → 08/2005		70	24	063535550050	**MAN2003**
75 E 13 K tector	F4AE0481D	95	09/2003 → 08/2005		90	24	063536550050	**MAN2045**
75 E 13 tector, 75 E 13 P tector	F4AE0481D	95	09/2000 →		35	24	063320060010	**MAN772**
75 E 13 tector, 75 E 13 P tector	F4AE0481D	95	09/2000 → 08/2003		70	24	063535550050	**MAN2003**
75 E 13 tector, 75 E 13 P tector	F4AE0481D	95	09/2000 → 08/2003		90	24	063536550050	**MAN2045**
75 E 14	8040.45.4000, 8040.45.4180	100	01/1991 →		35	24	063320060010	**MAN772**
75 E 14	8040.45.4000, 8040.45.4180	100	01/1991 → 12/1993		55	24	063534690480	**MAN2009**
75 E 14 K	8040.45.4000, 8040.45.4180	100	01/1997 →		35	24	063320060010	**MAN772**
75 E 14 K tector	F4AE3481C	103	09/2006 →		70	24	063535550050	**MAN2003**
75 E 14 K tector	F4AE3481C	103	09/2006 →		90	24	063536550050	**MAN2045**
75 E 14 tector, 75 E 14 P tector	F4AE3481C	103	09/2006 →		70	24	063535550050	**MAN2003**
75 E 14 tector, 75 E 14 P tector	F4AE3481C	103	09/2006 →		90	24	063536550050	**MAN2045**
75 E 15 K	8060.25R.4200 LTC	105	01/1991 → 09/2000		35	24	063320060010	**MAN772**
75 E 15 K	8060.25R.4200 LTC	105	01/1991 → 12/1992		55	24	063534690480	**MAN2009**
75 E 15 K	8060.25R.4200 LTC	105	01/1991 → 12/1992		35	24	063534882530	**MAN2015**
75 E 15 K tector	F4AE0481C	110	09/2000 →		35	24	063320060010	**MAN772**
75 E 15 K tector	F4AE0481C	110	09/2000 → 08/2003		70	24	063535550050	**MAN2003**
75 E 15 K tector	F4AE0481C	110	09/2000 → 08/2003		90	24	063536550050	**MAN2045**
75 E 15 tector, 75 E 15 P tector	F4AE0481C	110	09/2000 →		35	24	063320060010	**MAN772**
75 E 15 tector, 75 E 15 P tector	F4AE0481C	110	09/2000 → 08/2003		70	24	063535550050	**MAN2003**
75 E 15 tector, 75 E 15 P tector	F4AE0481C	110	09/2000 → 08/2003		90	24	063536550050	**MAN2045**

		kW ÷ kW			A	V	LONG	SHORT
IVECO								
EuroCargo								
75 E 15, 80 E 15	8060.25R.4200 LTC	105	01/1991 → 09/2000		35	24	063320060010	**MAN772**
75 E 15, 80 E 15	8060.25R.4200 LTC	105	01/1991 → 12/1992		55	24	063534690480	**MAN2009**
75 E 15, 80 E 15	8060.25R.4200 LTC	105	01/1991 → 12/1992		35	24	063534882530	**MAN2015**
75 E 16 K tector	F4AE3481D	118	09/2006 →		70	24	063535550050	**MAN2003**
75 E 16 K tector	F4AE3481D	118	09/2006 →		90	24	063536550050	**MAN2045**
75 E 16 tector, 75 E 16 P tector	F4AE3481D	118	09/2006 →		70	24	063535550050	**MAN2003**
75 E 16 tector, 75 E 16 P tector	F4AE3481D	118	09/2006 →		90	24	063536550050	**MAN2045**
75 E 17 K, 75 E 18 K tector	F4AE0481A, F4AE3481B	125 130	09/2000 →		35	24	063320060010	**MAN772**
75 E 17 K, 75 E 18 K tector	F4AE0481A, F4AE3481B	125 130	09/2000 → 08/2003		70	24	063535550050	**MAN2003**
75 E 17 K, 75 E 18 K tector	F4AE0481A, F4AE3481B	125 130	09/2000 → 08/2003		90	24	063536550050	**MAN2045**
75 E 17, 75 E 17 P, 75 E 18 tector	F4AE0481A, F4AE3481B	125 130	09/2000 →		35	24	063320060010	**MAN772**
75 E 17, 75 E 17 P, 75 E 18 tector	F4AE0481A, F4AE3481B	125 130	09/2000 → 08/2003		70	24	063535550050	**MAN2003**
75 E 17, 75 E 17 P, 75 E 18 tector	F4AE0481A, F4AE3481B	125 130	09/2000 → 08/2003		90	24	063536550050	**MAN2045**
75 E 18 K tector	F4AE0681E	134	09/2000 →		35	24	063320060010	**MAN772**
75 E 18 K tector	F4AE0681E	134	09/2000 → 08/2003		70	24	063535550050	**MAN2003**
75 E 18 K tector	F4AE0681E	134	09/2000 → 08/2005		90	24	063536550050	**MAN2045**
75 E 18 tector, 75 E 18 P tector	F4AE0681D, F4AE0681E	134	09/2000 →		35	24	063320060010	**MAN772**
75 E 18 tector, 75 E 18 P tector	F4AE0681D, F4AE0681E	134	09/2000 → 08/2003		70	24	063535550050	**MAN2003**
75 E 18 tector, 75 E 18 P tector	F4AE0681D, F4AE0681E	134	09/2000 → 08/2005		90	24	063536550050	**MAN2045**
80 E 15	8060.25R.4200 LTC	105	01/1991 → 08/2000		55	24	063534690480	**MAN2009**
80 E 15	8060.25R.4200 LTC	105	01/1991 → 08/2000		35	24	063534882530	**MAN2015**
80 E 15 K	8060.25R.4200 LTC	105	01/1991 → 08/2000		55	24	063534690480	**MAN2009**
80 E 15 K	8060.25R.4200 LTC	105	01/1991 → 08/2000		35	24	063534882530	**MAN2015**
80 E 17 K, 80 E 17 DK tector, 80 E 18 K tector	F4AE0481A, F4AE3481B	125 130	09/2000 → 08/2003		70	24	063535550050	**MAN2003**
80 E 17 K, 80 E 17 DK tector, 80 E 18 K tector	F4AE0481A, F4AE3481B	125 130	09/2000 → 08/2003		90	24	063536550050	**MAN2045**

		kW ÷ kW		i	A	V	MAGNETI MARELLI LONG	MAGNETI MARELLI SHORT
IVECO								
EuroCargo								
80 E 17, 80 E 17 D tector, 80 E 17 DP tector, 80 E 18 tector	F4AE0481A, F4AE3481B	125 130	09/2000 → 08/2003		70	24	063535550050	**MAN2003**
80 E 17, 80 E 17 D tector, 80 E 17 DP tector, 80 E 18 tector	F4AE0481A, F4AE3481B	125 130	09/2000 → 08/2003		90	24	063536550050	**MAN2045**
80 E 18	8060.25V.4000	130	01/1991 → 08/2000		55	24	063534690480	**MAN2009**
80 E 18	8060.25V.4000	130	01/1991 → 08/2000		35	24	063534882530	**MAN2015**
80 E 18 K	8060.25V.4000	130	01/1991 → 08/2000		55	24	063534690480	**MAN2009**
80 E 18 K	8060.25V.4000	130	01/1991 → 08/2000		35	24	063534882530	**MAN2015**
80 E 18 K tector	F4AE3481B	130	09/2006 →		70	24	063535550050	**MAN2003**
80 E 18 K tector	F4AE3481B	130	09/2006 →		90	24	063536550050	**MAN2045**
80 E 18 K tector, 80 E 18 DK tector	F4AE0681E	134	09/2000 → 08/2003		70	24	063535550050	**MAN2003**
80 E 18 K tector, 80 E 18 DK tector	F4AE0681E	134	09/2000 → 08/2003		90	24	063536550050	**MAN2045**
80 E 18 tector, 80 E 18 D tector, 80 E 18 DP tector	F4AE0681D, F4AE0681E	134	09/2000 → 08/2003		70	24	063535550050	**MAN2003**
80 E 18 tector, 80 E 18 D tector, 80 E 18 DP tector	F4AE0681D, F4AE0681E	134	09/2000 → 08/2003		90	24	063536550050	**MAN2045**
80 E 18 tector, 80 E 18 P tector, 80 E 18 FP tector	F4AE3481B	130	09/2006 →		70	24	063535550050	**MAN2003**
80 E 18 tector, 80 E 18 P tector, 80 E 18 FP tector	F4AE3481B	130	09/2006 →		90	24	063536550050	**MAN2045**
80 E 21	8060.45.4100 TCA, 8060.45.4180	152	01/1991 → 08/2000		55	24	063534690480	**MAN2009**
80 E 21	8060.45.4100 TCA, 8060.45.4180	152	01/1991 → 08/2000		35	24	063534882530	**MAN2015**
80 E 21 K, 80 E 21 DK tector, 80 E 22 K tector	F4AE0681D, F4AE3681B	154 160	09/2000 → 08/2003		70	24	063535550050	**MAN2003**
80 E 21 K, 80 E 21 DK tector, 80 E 22 K tector	F4AE0681D, F4AE3681B	154 160	09/2000 →		90	24	063536550050	**MAN2045**
80 E 21, 80 E 21 D tector, 80 E 21 DP tector, 80 E 22 tector	F4AE0681D, F4AE3681B	154 160	09/2000 → 08/2003		70	24	063535550050	**MAN2003**
80 E 21, 80 E 21 D tector, 80 E 21 DP tector, 80 E 22 tector	F4AE0681D, F4AE3681B	154 160	09/2000 →		90	24	063536550050	**MAN2045**
80 EL 15 tector	F4AE0481C	110	09/2000 → 08/2003		70	24	063535550050	**MAN2003**
80 EL 15 tector	F4AE0481C	110	09/2000 → 08/2003		90	24	063536550050	**MAN2045**
80 EL 16 tector, 80 EL 16 P tector	F4AE3481D	118	09/2006 →		70	24	063535550050	**MAN2003**

		kW ÷ kW			A	V	MAGNETI MARELLI LONG	MAGNETI MARELLI SHORT
IVECO								
EuroCargo								
80 EL 16 tector, 80 EL 16 P tector	F4AE3481D	118	09/2006 →		90	24	063536550050	**MAN2045**
80 EL 17 tector, 80 EL 17 P tector	F4AE0481A	125	09/2003 → 08/2005		70	24	063535550050	**MAN2003**
80 EL 17 tector, 80 EL 17 P tector	F4AE0481A	125	09/2003 → 08/2005		90	24	063536550050	**MAN2045**
80 EL 18 tector, 80 EL 18 P tector	F4AE3481B	130	09/2006 →		70	24	063535550050	**MAN2003**
80 EL 18 tector, 80 EL 18 P tector	F4AE3481B	130	09/2006 →		90	24	063536550050	**MAN2045**
90 E 17 K tector, 90 E 17 DK tector	F4AE0481A	125	09/2000 → 08/2003		70	24	063535550050	**MAN2003**
90 E 17 K tector, 90 E 17 DK tector	F4AE0481A	125	09/2000 → 09/2005		90	24	063536550050	**MAN2045**
90 E 17, 90 E 17D tector, 90 E 17 DP tector, 90 E 18 tector	F4AE0481A, F4AE3481B	125 130	09/2000 → 08/2003		70	24	063535550050	**MAN2003**
90 E 17, 90 E 17D tector, 90 E 17 DP tector, 90 E 18 tector	F4AE0481A, F4AE3481B	125 130	09/2000 → 09/2005		90	24	063536550050	**MAN2045**
90 E 18 K tector, 90 E 18 DK tector	F4AE0681E	134	09/2000 → 09/2005		70	24	063535550050	**MAN2003**
90 E 18 K tector, 90 E 18 DK tector	F4AE0681E	134	09/2000 → 09/2005		90	24	063536550050	**MAN2045**
90 E 18 tector, 90 E 18 D tector, 90 E 18 DP tector	F4AE0681E	130 134	09/2000 → 09/2005		70	24	063535550050	**MAN2003**
90 E 18 tector, 90 E 18 D tector, 90 E 18 DP tector	F4AE0681E	130 134	09/2000 → 09/2005		90	24	063536550050	**MAN2045**
90 E 21 K tector, 90 E 21 DK tector	F4AE0681D	154	09/2000 → 09/2005		70	24	063535550050	**MAN2003**
90 E 21 K tector, 90 E 21 DK tector	F4AE0681D	154	09/2000 → 08/2003		90	24	063536550050	**MAN2045**
90 E 21, 90 E 21 D tector, 90 E 21 DP tector, 90 E 22 tector	F4AE0681D, F4AE3681B	154 160	09/2000 → 09/2005		70	24	063535550050	**MAN2003**
90 E 21, 90 E 21 D tector, 90 E 21 DP tector, 90 E 22 tector	F4AE0681D, F4AE3681B	154 160	09/2000 →		90	24	063536550050	**MAN2045**
90 E 22 K tector	F4AE3681B	160	09/2006 →		70	24	063535550050	**MAN2003**
90 E 22 K tector	F4AE3681B	160	09/2006 →		90	24	063536550050	**MAN2045**

		kW ÷ kW		i	A	V	LONG	SHORT
IVECO								
EuroCargo								
95 E 15 W	8060.25R.4750, 8060.25R.4755, 8060.25R.4760, 8060.25R.4764, 8060.45R.5050, 8060.45R.5051	105	11/1993 → 08/2000		55	24	063534690480	**MAN2009**
95 E 15 W	8060.25R.4750, 8060.25R.4755, 8060.25R.4760, 8060.25R.4764, 8060.45R.5050, 8060.45R.5051	105	11/1993 → 08/2000		35	24	063534882530	**MAN2015**
95 E 21 W	8060.45.4700, 8060.45.4702, 8060.45.4704, 8060.45.4706, 8060.45.4708, 8060.45.5250, 8060.45.5251, 8060.45.5255	152	11/1993 → 12/2000		55	24	063534690480	**MAN2009**
95 E 21 W	8060.45.4700, 8060.45.4702, 8060.45.4704, 8060.45.4706, 8060.45.4708, 8060.45.5250, 8060.45.5251, 8060.45.5255	152	11/1993 → 12/2000		35	24	063534882530	**MAN2015**
tector 65 E 13	F4AE0481D	95	09/2000 →		35	24	063320060010	**MAN772**
tector 65 E 13	F4AE0481D	95	09/2000 → 08/2003		70	24	063535550050	**MAN2003**
tector 65 E 13	F4AE0481D	95	09/2000 → 08/2003		90	24	063536550050	**MAN2045**
EuroStar								
LD 190 E 38 P	8460.41L TCA	276	01/1993 → 07/2000		80	24	063534681240	**MAN2006**
LD 190 E 42, LD 190 E 42 P	8210.42L (TCA), 8210.42L.400	309	01/1993 → 11/2000		80	24	063534681240	**MAN2006**
LD 190 E 47	8210.42M. TCA	345	01/1993 → 11/2000		80	24	063534681240	**MAN2006**
LD 190 E 52	8280.42S. TCA	378	01/1993 → 11/2000		80	24	063534681240	**MAN2006**
LD 240 E 38	8460.41L.5020	276	01/1993 → 11/2000		80	24	063534681240	**MAN2006**
LD 240 E 42 FS, LD 240 E 42 PS	8210.42L (TCA), 8210.42L.400	309	01/1993 → 12/2000		80	24	063534681240	**MAN2006**
LD 240 E 47 P	8210.42M. TCA	345	11/1995 → 02/2002		80	24	063534681240	**MAN2006**
LD 240 E 52 P	8280.42S. TCA	378	01/1993 → 12/2000		80	24	063534681240	**MAN2006**
LD 260 E 38 P	8460.41L TCA	276	01/1993 → 09/1995		80	24	063534681240	**MAN2006**
LD 260 E 42 P	8210.42L.	309	01/1993 → 12/2000		80	24	063534681240	**MAN2006**
LD 260 E 47	8210.42M. TCA	345	01/1993 → 12/2000		80	24	063534681240	**MAN2006**
LD 260 E 52	8280.42S. TCA	378	01/1993 → 07/2000		80	24	063534681240	**MAN2006**
LD 400 E 38 TXP,LD 440 E 38 TXP	8460.41L TCA, 8460.41L.5020, 8460.41N	276	01/1993 → 11/2000		80	24	063534681240	**MAN2006**
LD 400 E 42 TXP,LD 440 E 42 TXP	8210.42L.	309	01/1993 → 12/2000		80	24	063534681240	**MAN2006**

		kW ÷ kW			A	V	LONG	SHORT
IVECO								
EuroStar								
LD 440 E 38 T	8460.41L TCA, 8460.41N	276	04/1993 → 11/2000		80	24	063534681240	**MAN2006**
LD 440 E 38 TZ	8460.41L TCA, 8460.41N	276	04/1993 → 11/2000		80	24	063534681240	**MAN2006**
LD 440 E 42 T/P	8210.42L (TCA), 8210.42L.	309	01/1993 → 12/2000		80	24	063534681240	**MAN2006**
LD 440 E 42 TZ	8210.42L.	309	01/1993 → 12/2000		80	24	063534681240	**MAN2006**
LD 440 E 47 T/P	8210.42M. TCA	345	01/1993 → 12/2000		80	24	063534681240	**MAN2006**
LD 440 E 47 TZ	8210.42M. TCA	345	01/1993 → 12/2000		80	24	063534681240	**MAN2006**
LD 440 E 52 T	8280.42S. TCA	378	01/1993 → 12/2000		80	24	063534681240	**MAN2006**
LD 440 E 52 TZ	8280.42S. TCA	378	01/1993 → 12/2000		80	24	063534681240	**MAN2006**
EuroTech MH								
190 E 24, 190 E 24 /P	F2BE0681D	180	08/2000 → 03/2006		90	24	063535255000	**MAN2025**
190 E 27, 190 E 27 /P	F2BE0681C, F2BE0681F	200	08/2000 → 05/2004		90	24	063535255000	**MAN2025**
190 E 31, 190 E 31 /P	F2BE0681B	228	08/2000 → 08/2003		90	24	063535255000	**MAN2025**
190 E 35, 190 E 35 /P, 190 E 35 /FP	F2BE0681A	259	08/2000 → 08/2003		90	24	063535255000	**MAN2025**
260 E 24 Y/P, 260 E 24 Y/PS, 260 E 24 Y/PT	F2BE0681D	180	08/2000 → 03/2006		90	24	063535255000	**MAN2025**
260 E 27 Y/P, 260 E 27 Y/PS, 260 E 27 RY/PS, 260 E 27 RY/PT	F2BE0681C, F2BE0681F	200	08/2000 → 08/2003		90	24	063535255000	**MAN2025**
260 E 31 Y/P, 260 E 31 Y/PS, 260 E 31 Y/PT	F2BE0681B	228	08/2000 → 08/2003		90	24	063535255000	**MAN2025**
260 E 35 Y/P, 260 E 35 Y/PT, 260 E 35 Y/TN	F2BE0681A	259	08/2000 → 08/2003		90	24	063535255000	**MAN2025**
400 E 31 TP, 440 E 31 T, 440 E 31 TP	F2BE0681B	228	08/2000 → 08/2003		90	24	063535255000	**MAN2025**
400 E 35 TP, 440 E 35 T, 440 E 35 T/P, 440 E 35 T/FP	F2BE0681A	259	08/2000 → 08/2004		90	24	063535255000	**MAN2025**
440 E 35 TX/P	F2BE0681A	259	08/2000 → 08/2003		90	24	063535255000	**MAN2025**
MH 190 E 24 K	F2BE0681D	180	08/2000 → 03/2006		90	24	063535255000	**MAN2025**
MH 190 E 27 K	F2BE0681C, F2BE0681F	200	08/2000 → 05/2004		90	24	063535255000	**MAN2025**
MH 190 E 31 K	F2BE0681B	228	08/2000 → 08/2003		90	24	063535255000	**MAN2025**
EuroTech MP								
190 E 42, 190 E 42 /P	8210.42L.400	309	01/1993 → 11/2000		80	24	063534681240	**MAN2006**
400 E 38 T, 440 E 38 T, 440 E 38 T /P	8460.41L.5020, 8460.41N	276	09/1992 → 11/2000		80	24	063534681240	**MAN2006**
400 E 42 T, 440 E 42 T, 440 E 42 T/P	8210.42L (TCA), 8210.42L.400	309	04/1992 → 12/2000		80	24	063534681240	**MAN2006**
MP 180 E 34	8460.41K.406	254	04/1992 → 12/1993		80	24	063534681240	**MAN2006**
MP 180 E 38	8460.41L.5020	276	09/1992 → 12/1993		80	24	063534681240	**MAN2006**

		kW ÷ kW		i	A	V	LONG	SHORT
IVECO								
EuroTech MP								
MP 180 E 42	8210.42L.400	309	04/1992 → 12/1993		80	24	063534681240	**MAN2006**
MP 190 E 34	8460.41K.406	254	01/1993 → 07/2000		80	24	063534681240	**MAN2006**
MP 190 E 38	8460.41L TCA	276	01/1993 → 07/2000		80	24	063534681240	**MAN2006**
MP 240 E 30 PS	8460.41C. TCA	221	01/1997 → 12/2002		80	24	063534681240	**MAN2006**
MP 240 E 34	8460.41K. TCA	254	09/1995 → 12/1996		80	24	063534681240	**MAN2006**
MP 240 E 38	8460.41L.5020	276	09/1992 → 11/2000		80	24	063534681240	**MAN2006**
MP 240 E 42	8210.42L.400	309	04/1992 → 12/2000		80	24	063534681240	**MAN2006**
MP 260 E 38 P	8460.41N	276	01/1994 → 07/2000		80	24	063534681240	**MAN2006**
MP 260 E 42	8210.42L.400	309	01/1994 → 12/2000		80	24	063534681240	**MAN2006**
MP 400 E 34 T,MP 440 E 34 T	8460.41K.406	254	04/1992 → 12/2000		80	24	063534681240	**MAN2006**
MP 400 E 38 TXP	8460.41L.5020, 8460.41N	276	11/1993 → 12/1996		80	24	063534681240	**MAN2006**
MP 440 E 38 TZ	8460.41L TCA	276	04/1993 → 12/2000		80	24	063534681240	**MAN2006**
MP 440 E 42 TZ	8210.42L.400	309	01/1993 → 12/2000		80	24	063534681240	**MAN2006**
EuroTech MT								
MT 180 E 24	8360.46R.416 TCA	176	07/1992 → 12/1996		80	24	063534681240	**MAN2006**
MT 180 E 24	8360.46R.416 TCA	176	07/1992 → 12/1996		120	24	063536895380	**MAN2004**
MT 180 E 24 K	8360.46R.416 TCA	176	01/1993 → 12/1996		80	24	063534681240	**MAN2006**
MT 180 E 24 K	8360.46R.416 TCA	176	01/1993 → 12/1996		120	24	063536895380	**MAN2004**
MT 180 E 27	8360.46.417 TCA	196	07/1992 → 12/1996		80	24	063534681240	**MAN2006**
MT 180 E 27	8360.46.417 TCA	196	07/1992 → 12/1996		120	24	063536895380	**MAN2004**
MT 180 E 27 K	8360.46.417 TCA	196	07/1992 → 12/1996		80	24	063534681240	**MAN2006**
MT 180 E 27 K	8360.46.417 TCA	196	07/1992 → 12/1996		120	24	063536895380	**MAN2004**
MT 180 E 30 R	8460.41C.320	221	07/1992 → 12/1996		80	24	063534681240	**MAN2006**
MT 180 E 34 R	8460.41K.406	254	04/1992 → 12/1993		80	24	063534681240	**MAN2006**
MT 190 E 24	8360.46R.416 TCA	176	01/1997 → 08/1998		80	24	063534681240	**MAN2006**
MT 190 E 24	8360.46R.416 TCA	176	01/1997 → 08/1998		120	24	063536895380	**MAN2004**
MT 190 E 24 K	8360.46R.416 TCA	176	01/1997 → 08/1998		80	24	063534681240	**MAN2006**
MT 190 E 24 K	8360.46R.416 TCA	176	01/1997 → 08/1998		120	24	063536895380	**MAN2004**
MT 190 E 27	8360.46.417 TCA	196	01/1997 → 08/1998		80	24	063534681240	**MAN2006**
MT 190 E 27	8360.46.417 TCA	196	01/1997 → 08/1998		120	24	063536895380	**MAN2004**
MT 190 E 27 K	8360.46.417 TCA	196	01/1997 → 08/1998		80	24	063534681240	**MAN2006**
MT 190 E 27 K	8360.46.417 TCA	196	01/1997 → 08/1998		120	24	063536895380	**MAN2004**
MT 190 E 30	8460.41C.320	221	01/1997 → 08/1998		80	24	063534681240	**MAN2006**
MT 190 E 30 K	8460.41C.320	221	01/1997 → 08/1998		80	24	063534681240	**MAN2006**

		kW ÷ kW			A	V	LONG	SHORT
IVECO								
EuroTech MT								
MT 400 E 30 T	8460.41C.320	221	04/1992 → 08/1998		80	24	063534681240	**MAN2006**
MT 400 E 34 T	8460.41K.406	254	04/1992 → 08/1998		80	24	063534681240	**MAN2006**
EuroTrakker								
MP 180 E 24 W Cursor	F2BE0681D	180	08/2000 → 08/2004		90	24	063535255000	**MAN2025**
MP 180 E 25 W	8460.41 T	185	05/1999 → 11/2000		80	24	063534681240	**MAN2006**
MP 190 E 24 H Cursor	F2BE0681D	180	08/2000 → 05/2004		90	24	063535255000	**MAN2025**
MP 190 E 30 H	8460.41C.	221	01/1993 → 07/2000		80	24	063534681240	**MAN2006**
MP 190 E 30 W	8460.41C.	221	11/1999 → 07/2000		80	24	063534681240	**MAN2006**
MP 190 E 30 W	8460.41C.	221	01/1993 → 07/2000		80	24	063534681240	**MAN2006**
MP 190 E 31 H Cursor	F2BE0681B	228	08/2000 → 08/2004		90	24	063535255000	**MAN2025**
MP 190 E 31 W Cursor	F2BE0681B	228	08/2000 → 08/2004		90	24	063535255000	**MAN2025**
MP 190 E 31 W Cursor	F2BE0681A	259	08/2000 → 08/2004		90	24	063535255000	**MAN2025**
MP 190 E 34 H	8460.41K.	254	01/1993 → 07/2000		80	24	063534681240	**MAN2006**
MP 190 E 34 W	8460.41K.	254	04/1993 → 11/2000		80	24	063534681240	**MAN2006**
MP 190 E 34 W	8460.41K. TCA	254	11/1999 → 07/2000		80	24	063534681240	**MAN2006**
MP 190 E 35 H Cursor	F2BE0681A	259	08/2000 → 08/2004		90	24	063535255000	**MAN2025**
MP 190 E 35 W Cursor	F2BE0681A	259	08/2000 → 08/2004		90	24	063535255000	**MAN2025**
MP 190 E 37 H	8210.42K.	272	04/1993 → 11/2000		80	24	063534681240	**MAN2006**
MP 190 E 37 H	8210.42K (TCA)	272	01/2000 → 11/2000		80	24	063534681240	**MAN2006**
MP 190 E 37 W	8210.42K.	272	01/1993 → 11/2000		80	24	063534681240	**MAN2006**
MP 190 E 37 W	8210.42K (TCA)	272	11/1999 → 11/2000		80	24	063534681240	**MAN2006**
MP 190 E 42 H	8210.42L.	309	01/1993 → 11/2000		80	24	063534681240	**MAN2006**
MP 190 E 42 H	8210.42L (TCA), 8210.42L.	309	11/1999 → 11/2000		80	24	063534681240	**MAN2006**
MP 190 E 42 W	8210.42L (TCA), 8210.42L.	309	01/1993 → 11/2000		80	24	063534681240	**MAN2006**
MP 260 E 27 H Cursor	F2BE0681B	228	08/2000 → 08/2004		90	24	063535255000	**MAN2025**
MP 260 E 30 H	8460.41C.	221	01/1993 → 07/2000		80	24	063534681240	**MAN2006**
MP 260 E 30 W	8460.41C., 8460.41C. TCA	221	11/1999 → 07/2000		80	24	063534681240	**MAN2006**
MP 260 E 31 H Cursor	F2BE0681B	228	08/2000 → 08/2004		90	24	063535255000	**MAN2025**
MP 260 E 31 HB Cursor	F2BE0681B	228	01/2001 → 08/2004		90	24	063535255000	**MAN2025**
MP 260 E 34 H	8460.41K., 8460.41K. TCA	254	11/1999 → 07/2000		80	24	063534681240	**MAN2006**
MP 260 E 34 H	8460.41K.	254	01/1993 → 07/2000		80	24	063534681240	**MAN2006**
MP 260 E 34 W	8460.41K., 8460.41K. TCA	254	11/1999 → 07/2000		80	24	063534681240	**MAN2006**
MP 260 E 34 W	8460.41K.	254	01/1993 → 07/2000		80	24	063534681240	**MAN2006**
MP 260 E 35 H Cursor	F2BE0681A	259	08/2000 → 08/2004		90	24	063535255000	**MAN2025**
MP 260 E 35 W Cursor	F2BE0681A	259	08/2000 → 08/2004		90	24	063535255000	**MAN2025**
MP 260 E 37 H	8210.42K.	272	01/1993 → 07/2000		80	24	063534681240	**MAN2006**
MP 260 E 37 W	8210.42K (TCA), 8210.42K.	272	11/1999 → 12/2001		80	24	063534681240	**MAN2006**
MP 260 E 37 W	8210.42K.	272	01/1993 → 07/2000		80	24	063534681240	**MAN2006**

		kW ÷ kW		i	A	V	LONG	SHORT
IVECO								
EuroTrakker								
MP 260 E 42 H	8210.42L (TCA)	309	11/1999 → 12/2000		80	24	063534681240	**MAN2006**
MP 260 E 42 H	8210.42L.	309	12/1994 → 12/2001		80	24	063534681240	**MAN2006**
MP 260 E 42 W	8210.42L (TCA), 8210.42L.	309	12/1994 → 12/2000		80	24	063534681240	**MAN2006**
MP 260 E 47 H	8210.42M. TCA	345	11/1999 → 12/2000		80	24	063534681240	**MAN2006**
MP 260 E 47 W	8210.42M. TCA	345	11/1999 → 12/2000		80	24	063534681240	**MAN2006**
MP 260 E35 H Cursor	F2BE0681A	259	08/2000 → 08/2004		90	24	063535255000	**MAN2025**
MP 340 E 34 H	8460.41K., 8460.41K. TCA	254	11/1999 → 07/2000		80	24	063534681240	**MAN2006**
MP 340 E 34 H	8460.41K.	254	01/1993 → 12/2000		80	24	063534681240	**MAN2006**
MP 340 E 35 H Cursor	F2BE0681A	259	08/2000 → 08/2004		90	24	063535255000	**MAN2025**
MP 340 E 35 HB Cursor	F2BE0681A	259	01/2001 → 08/2004		90	24	063535255000	**MAN2025**
MP 340 E 37 H	8210.42K (TCA), 8210.42K.	272	11/1999 → 12/2002		80	24	063534681240	**MAN2006**
MP 340 E 37 H	8210.42K.	272	01/1993 → 07/2000		80	24	063534681240	**MAN2006**
MP 340 E 42 H	8210.42L.	309	03/1995 → 12/2000		80	24	063534681240	**MAN2006**
MP 340 E 42 H	8210.42L (TCA), 8210.42L.	309	11/1999 → 12/2000		80	24	063534681240	**MAN2006**
MP 380 E 34 H	8460.41K.	254	01/1993 → 12/2000		80	24	063534681240	**MAN2006**
MP 380 E 34 H	8460.41K., 8460.41K. TCA	254	11/1999 → 07/2000		80	24	063534681240	**MAN2006**
MP 380 E 34 W	8460.41K., 8460.41K. TCA	254	11/1999 → 07/2000		80	24	063534681240	**MAN2006**
MP 380 E 35 H Cursor	F2BE0681A	259	08/2000 → 08/2004		90	24	063535255000	**MAN2025**
MP 380 E 35 W Cursor	F2BE0681A	259	08/2000 → 08/2004		90	24	063535255000	**MAN2025**
MP 380 E 37 H	8210.42K.	272	01/1993 → 07/2000		80	24	063534681240	**MAN2006**
MP 380 E 37 H	8210.42K (TCA), 8210.42K.	272	11/1999 → 12/2002		80	24	063534681240	**MAN2006**
MP 380 E 37 W	8210.42K (TCA), 8210.42K.	272	03/1995 → 12/2002		80	24	063534681240	**MAN2006**
MP 380 E 42 H	8210.42L.	309	03/1995 → 12/2000		80	24	063534681240	**MAN2006**
MP 380 E 42 H	8210.42L (TCA), 8210.42L.	309	01/1993 → 12/2000		80	24	063534681240	**MAN2006**
MP 380 E 42 W	8210.42L (TCA), 8210.42L.	309	11/1999 → 12/2000		80	24	063534681240	**MAN2006**
MP 380 E 42 W	8210.42L.	309	01/1993 → 12/2000		80	24	063534681240	**MAN2006**
MP 380 E 47 H	8210.42M. TCA	345	11/1999 → 12/2000		80	24	063534681240	**MAN2006**
MP 380 E 47 W	8210.42M. TCA	345	11/1999 → 12/2000		80	24	063534681240	**MAN2006**
MP 400 E 34 HT	8460.41K., 8460.41K. TCA	254	01/1993 → 12/2000		80	24	063534681240	**MAN2006**
MP 400 E 35 HT Cursor	F2BE0681A	259	08/2000 → 08/2004		90	24	063535255000	**MAN2025**
MP 400 E 37 HT	8210.42K (TCA), 8210.42K.	272	01/1993 → 12/2000		80	24	063534681240	**MAN2006**
MP 400 E 37 WT	8210.42K (TCA), 8210.42K.	272	07/1994 → 12/2000		80	24	063534681240	**MAN2006**

		kW ÷ kW			A	V	LONG	SHORT
IVECO								
EuroTrakker								
MP 400 E 42 HT	8210.42L (TCA), 8210.42L.	309	01/1993 → 12/2000		80	24	063534681240	**MAN2006**
MP 400 E 42 WT	8210.42L (TCA), 8210.42L.	309	01/1993 → 12/2000		80	24	063534681240	**MAN2006**
MP 410 E 35 H Cursor	F2BE0681A	259	08/2000 → 08/2004		90	24	063535255000	**MAN2025**
MP 410 E 37 H	8210.42K.	272	01/1993 → 11/2000		80	24	063534681240	**MAN2006**
MP 410 E 37 H	8210.42K (TCA)	272	11/1999 → 11/2000		80	24	063534681240	**MAN2006**
MP 410 E 37 W	8210.42K (TCA)	272	11/1999 → 11/2000		80	24	063534681240	**MAN2006**
MP 410 E 42 H	8210.42L (TCA)	309	11/1999 → 11/2000		80	24	063534681240	**MAN2006**
MP 410 E 42 H	8210.42L.	309	01/1993 → 11/2000		80	24	063534681240	**MAN2006**
MP 410 E 42 W	8210.42L (TCA), 8210.42L.	309	01/1993 → 11/2000		80	24	063534681240	**MAN2006**
MP 440 E 34 HT	8460.41K., 8460.41K. TCA	254	01/1993 → 07/2000		80	24	063534681240	**MAN2006**
MP 440 E 37 HT	8210.42K (TCA), 8210.42K.	272	01/1993 → 11/2000		80	24	063534681240	**MAN2006**
MP 440 E 42 HT	8210.42L (TCA), 8210.42L.	309	01/1993 → 12/2000		80	24	063534681240	**MAN2006**
MP 720 E 37 HT	8210.42K (TCA), 8210.42K.	272	09/1993 → 12/1995		80	24	063534681240	**MAN2006**
MP 720 E 37 WT	8210.42K (TCA), 8210.42K.	272	09/1993 → 12/1995		80	24	063534681240	**MAN2006**
MP 720 E 42 HT	8210.42L (TCA), 8210.42L.	309	09/1993 → 12/2000		80	24	063534681240	**MAN2006**
MP 720 E 42 WT	8210.42L (TCA), 8210.42L.	309	01/1993 → 12/2000		80	24	063534681240	**MAN2006**
MP 720 E 47 HT	8210.42M. TCA	345	01/1993 → 12/2000		80	24	063534681240	**MAN2006**
M								
115-17	8060.24.601	124	12/1985 → 12/1985		27	12	063304087010	**MAN873**
115-17	8060.25.600	130	01/1986 → 12/1991		27	12	063304087010	**MAN873**
115-17	8060.24.601	124	09/1983 → 12/1985		35	24	063320060010	**MAN772**
115-17	8060.25.600	130	01/1986 → 12/1991		30	24	063320025010	**MAN261**
115-17	8060.24.601	124	12/1985 → 12/1985		55	12	063324145010	**MAN100**
115-17	8060.25.600	130	01/1986 → 12/1991		35	24	063320060010	**MAN772**
115-17	8060.25.600	130	01/1986 → 12/1991		55	12	063324145010	**MAN100**
115-17	8060.25.600	130	01/1986 → 12/1991		55	24	063534690480	**MAN2009**
115-17 H	8060.25.600	130	01/1986 → 12/1991		27	12	063304087010	**MAN873**
115-17 H	8060.25.600	130	01/1986 → 12/1991		30	24	063320025010	**MAN261**
115-17 H	8060.25.600	130	01/1986 → 12/1991		35	24	063320060010	**MAN772**
115-17 H	8060.25.600	130	01/1986 → 12/1991		55	12	063324145010	**MAN100**
115-17 H	8060.25.600	130	01/1986 → 12/1991		55	24	063534690480	**MAN2009**
135-17	8060.24.601	124	12/1985 → 12/1985		27	12	063304087010	**MAN873**
135-17	8060.25.600	130	01/1986 → 12/1991		27	12	063304087010	**MAN873**
135-17	8060.25.600	130	01/1986 → 12/1991		30	24	063320025010	**MAN261**

		kW ÷ kW		i	A	V	MAGNETI MARELLI LONG	MAGNETI MARELLI SHORT
IVECO								
M								
135-17	8060.24.601	124	09/1983 → 12/1985		35	24	063320060010	**MAN772**
135-17	8060.25.600	130	01/1986 → 12/1991		35	24	063320060010	**MAN772**
135-17	8060.25.600	130	01/1986 → 12/1991		55	24	063534690480	**MAN2009**
135-17 H	8060.25.600	130	01/1986 → 12/1992		30	24	063320025010	**MAN261**
135-17 H	8060.25.600	130	01/1986 → 08/1992		35	24	063320060010	**MAN772**
135-17 H	8060.25.600	130	01/1986 → 08/1992		55	24	063534690480	**MAN2009**
135-17 T	8060.24.601	124	12/1985 → 12/1985		27	12	063304087010	**MAN873**
135-17 T	8060.25.600	130	01/1986 → 12/1991		27	12	063304087010	**MAN873**
135-17 T	8060.25.600	130	01/1986 → 12/1991		30	24	063320025010	**MAN261**
135-17 T	8060.24.601	124	09/1983 → 12/1985		35	24	063320060010	**MAN772**
135-17 T	8060.25.600	130	01/1986 → 12/1991		35	24	063320060010	**MAN772**
135-17 T	8060.25.600	130	01/1986 → 12/1991		55	24	063534690480	**MAN2009**
145-17	8060.25.600	130	02/1986 → 12/1991		27	12	063304087010	**MAN873**
145-17	8060.25.600	130	02/1986 → 12/1991		30	24	063320025010	**MAN261**
145-17	8060.25.600	130	02/1986 → 12/1991		35	24	063320060010	**MAN772**
145-17	8060.25.600	130	02/1986 → 12/1991		55	24	063534690480	**MAN2009**
159-17	8360.05.254	124	07/1985 → 09/1986		27	12	063304087010	**MAN873**
159-17	8360.05.254	124	12/1985 → 09/1986		30	24	063320025010	**MAN261**
159-17	8360.05.254	124	07/1982 → 09/1986		35	24	063320060010	**MAN772**
165-24 R	8220.22.002, 8220.22.102	177	01/1985 → 12/1985		30	24	063320025010	**MAN261**
165-24 R	8220.22.002, 8220.22.102	177	06/1982 → 09/1986		30	24	063320025010	**MAN261**
165-24 T	8220.22.002, 8220.22.102	177	06/1982 → 09/1986		30	24	063320025010	**MAN261**
175-17	8060.25.600	130	09/1986 → 07/1992		27	12	063304087010	**MAN873**
175-17	8060.25.600	130	09/1986 → 12/1992		30	24	063320025010	**MAN261**
175-17	8060.25.600	130	09/1986 → 07/1992		35	24	063320060010	**MAN772**
175-17	8060.25.600	130	09/1986 → 07/1992		55	24	063534690480	**MAN2009**
175-24	8460.21.002, 8460.21.010	176 178	09/1986 → 11/1992		30	24	063320025010	**MAN261**
175-24	8460.21.002, 8460.21.010	176 178	09/1986 → 07/1992		55	24	063534690480	**MAN2009**
175-24 T	8460.21.002, 8460.21.010	176 178	09/1986 → 11/1992		30	24	063320025010	**MAN261**
175-24 T	8460.21.002, 8460.21.010	176 178	09/1986 → 07/1992		55	24	063534690480	**MAN2009**
MK								
110-13 A	BF6L 913 T, F6L 913	96 99	03/1986 → 12/1991		55	24	063534690480	**MAN2009**
110-16 A	BF6L 913	118 124	03/1986 → 12/1991		55	24	063534690480	**MAN2009**
110-16 AH	BF6L 913	118 124	03/1986 → 12/1991		55	24	063534690480	**MAN2009**
80-13 A	BF6L 913 T, F6L 913	96 99	01/1983 → 12/1991		30	24	063320025010	**MAN261**

		kW ÷ kW				A	V	MAGNETI MARELLI LONG	MAGNETI MARELLI SHORT
IVECO									
MK									
80-13 A	BF6L 913 T, F6L 913	96	99	03/1986 → 12/1991		55	24	063534690480	**MAN2009**
80-13 AH	BF6L 913 T, F6L 913	96	99	01/1983 → 12/1991		30	24	063320025010	**MAN261**
80-13 AH	BF6L 913 T, F6L 913	96	99	03/1986 → 12/1991		55	24	063534690480	**MAN2009**
80-13 AT	BF6L 913 T, F6L 913	96	99	01/1983 → 12/1991		30	24	063320025010	**MAN261**
80-13 AT	BF6L 913 T, F6L 913	96	99	03/1986 → 12/1991		55	24	063534690480	**MAN2009**
80-13 AW	BF6L 913 T, F6L 913	96	99	01/1983 → 12/1991		30	24	063320025010	**MAN261**
80-13 AW	BF6L 913 T, F6L 913	96	99	01/1983 → 12/1989		30	24	063320025010	**MAN261**
80-13 AW	BF6L 913 T, F6L 913	96	99	03/1986 → 12/1991		55	24	063534690480	**MAN2009**
80-13 AW	BF6L 913 T, F6L 913	96	99	03/1986 → 12/1989		55	24	063534690480	**MAN2009**
80-16 A	BF6L 913	118	124	01/1983 → 12/1991		30	24	063320025010	**MAN261**
80-16 A	BF6L 913	118	124	03/1986 → 12/1991		55	24	063534690480	**MAN2009**
80-16 AW	BF6L 913	118	124	01/1986 → 12/1989		30	24	063320025010	**MAN261**
80-16 AW	BF6L 913	118	124	03/1986 → 12/1989		55	24	063534690480	**MAN2009**
90-13 A	BF6L 913 T	96	99	03/1986 → 12/1991		55	24	063534690480	**MAN2009**
90-13 AH	BF6L 913 T	96	99	03/1986 → 12/1991		55	24	063534690480	**MAN2009**
P/PA									
159-17 H	8360.05.254	124		07/1985 → 09/1986		27	12	063304087010	**MAN873**
159-17 H	8360.05.254	124		07/1982 → 09/1986		35	24	063320060010	**MAN772**
160-23 AH	F8L 413 F	168		04/1984 → 02/1988		27	24	063534897070	**MAN2019**
160-23 AHW	F8L 413 F	168		04/1984 → 02/1988		27	24	063534897070	**MAN2019**
160-23 AHW	F8L 413 F	168		01/1985 → 12/1985		27	24	063534897070	**MAN2019**
190-25 AH	F8L 413 F	188		07/1983 → 06/1986		27	24	063534897070	**MAN2019**
190-25 AHW	F8L 413 F	188		07/1983 → 06/1986		27	24	063534897070	**MAN2019**
190-30 H	8210.22.210, 8210.22.236, 8210.22.511, 8210.22.521, 8210.22.523, 8210.22.525, 8210.22.535, 8210.22.537	224		04/1987 → 12/1990		30	24	063320025010	**MAN261**
190-30 H	8210.22.210, 8210.22.236, 8210.22.511, 8210.22.521, 8210.22.523, 8210.22.525, 8210.22.535, 8210.22.537	224		01/1991 → 12/1992		30	24	063320025010	**MAN261**

		kW ÷ kW		i	A	V	LONG	SHORT
IVECO								
P/PA								
190-30 H	8210.22.210, 8210.22.236, 8210.22.511, 8210.22.521, 8210.22.523, 8210.22.525, 8210.22.535, 8210.22.537	224	09/1987 → 12/1990		35	24	063320060010	**MAN772**
190-30 H	8210.22.210, 8210.22.236, 8210.22.511, 8210.22.521, 8210.22.523, 8210.22.525, 8210.22.535, 8210.22.537	224	01/1991 → 12/1992		35	24	063320060010	**MAN772**
190-30 H	8210.22.210, 8210.22.236, 8210.22.511, 8210.22.521, 8210.22.523, 8210.22.525, 8210.22.535, 8210.22.537	224	01/1991 → 12/1992		55	24	063534690480	**MAN2009**
190-30 H	8210.22.210, 8210.22.236, 8210.22.511, 8210.22.521, 8210.22.523, 8210.22.525, 8210.22.535, 8210.22.537	224	09/1987 → 12/1990		55	24	063534690480	**MAN2009**
190-30 HT	8210.22.210, 8210.22.236, 8210.22.511, 8210.22.521, 8210.22.523, 8210.22.525, 8210.22.535, 8210.22.537	224	01/1989 → 12/1990		30	24	063320025010	**MAN261**
190-30 HT	8210.22.210, 8210.22.236, 8210.22.511, 8210.22.521, 8210.22.523, 8210.22.525, 8210.22.535, 8210.22.537	224	01/1990 → 12/1992		30	24	063320025010	**MAN261**
190-30 HT	8210.22.210, 8210.22.236, 8210.22.511, 8210.22.521, 8210.22.523, 8210.22.525, 8210.22.535, 8210.22.537	224	01/1990 → 12/1992		35	24	063320060010	**MAN772**
190-30 HT	8210.22.210, 8210.22.236, 8210.22.511, 8210.22.521, 8210.22.523, 8210.22.525, 8210.22.535, 8210.22.537	224	01/1989 → 12/1990		35	24	063320060010	**MAN772**

		kW ÷ kW		i	A	V	LONG	SHORT
IVECO								
P/PA								
190-30 HT	8210.22.210, 8210.22.236, 8210.22.511, 8210.22.521, 8210.22.523, 8210.22.525, 8210.22.535, 8210.22.537	224	01/1990 → 12/1992		55	24	063534690480	**MAN2009**
190-30 HT	8210.22.210, 8210.22.236, 8210.22.511, 8210.22.521, 8210.22.523, 8210.22.525, 8210.22.535, 8210.22.537	224	01/1989 → 12/1990		55	24	063534690480	**MAN2009**
190-30 HW	8210.22.210, 8210.22.236, 8210.22.511, 8210.22.521, 8210.22.523, 8210.22.525, 8210.22.535, 8210.22.537	224	04/1987 → 12/1990		30	24	063320025010	**MAN261**
190-30 HW	8210.22.210, 8210.22.236, 8210.22.511, 8210.22.521, 8210.22.523, 8210.22.525, 8210.22.535, 8210.22.537	224	01/1991 → 12/1992		30	24	063320025010	**MAN261**
190-30 HW	8210.22.210, 8210.22.236, 8210.22.511, 8210.22.521, 8210.22.523, 8210.22.525, 8210.22.535, 8210.22.537	224	09/1987 → 12/1990		35	24	063320060010	**MAN772**
190-30 HW	8210.22.210, 8210.22.236, 8210.22.511, 8210.22.521, 8210.22.523, 8210.22.525, 8210.22.535, 8210.22.537	224	01/1991 → 12/1992		35	24	063320060010	**MAN772**
190-30 HW	8210.22.210, 8210.22.236, 8210.22.511, 8210.22.521, 8210.22.523, 8210.22.525, 8210.22.535, 8210.22.537	224	09/1987 → 12/1990		55	24	063534690480	**MAN2009**
190-30 HW	8210.22.210, 8210.22.236, 8210.22.511, 8210.22.521, 8210.22.523, 8210.22.525, 8210.22.535, 8210.22.537	224	01/1991 → 12/1992		55	24	063534690480	**MAN2009**

		kW ÷ kW		i	A	V	LONG	SHORT
IVECO								
P/PA								
190-32 AH	F10L 413 F	235	01/1983 → 12/1985		30	24	063320025010	**MAN261**
190-32 AHW	F10L 413 F	235	01/1983 → 12/1985		30	24	063320025010	**MAN261**
260-30 AH	BF8L 513	225	06/1986 → 05/1990		30	24	063320025010	**MAN261**
260-30 AHT	BF8L 513	225	06/1986 → 05/1990		30	24	063320025010	**MAN261**
260-30 AHW	BF8L 513	225	06/1986 → 05/1990		30	24	063320025010	**MAN261**
260-32 AH	F10L 413 F	235	01/1983 → 12/1985		30	24	063320025010	**MAN261**
260-32 AHT	F10L 413 F	235	01/1983 → 12/1985		30	24	063320025010	**MAN261**
260-32 AHW	F10L 413 F	235	01/1983 → 12/1985		30	24	063320025010	**MAN261**
330-30 H	8210.22X.235, 8210.22X.523	224	12/1985 → 12/1990		27	12	063304087010	**MAN873**
330-30 H	8210.22X.235, 8210.22X.523	224	01/1988 → 12/1990		27	12	063304087010	**MAN873**
330-30 H	8210.22X.235, 8210.22X.523	224	12/1985 → 12/1992		27	12	063304087010	**MAN873**
330-30 H	8210.22X.235, 8210.22X.523	224	01/1991 → 12/1992		27	12	063304087010	**MAN873**
330-30 H	8210.22X.235, 8210.22X.523	224	06/1984 → 12/1990		30	24	063320025010	**MAN261**
330-30 H	8210.22X.235, 8210.22X.523	224	06/1984 → 12/1992		30	24	063320025010	**MAN261**
330-30 H	8210.22X.235, 8210.22X.523	224	01/1991 → 12/1992		30	24	063320025010	**MAN261**
330-30 H	8210.22X.235, 8210.22X.523	224	01/1988 → 12/1990		30	24	063320025010	**MAN261**
330-30 H	8210.22X.235, 8210.22X.523	224	12/1985 → 12/1990		35	24	063320060010	**MAN772**
330-30 H	8210.22X.235, 8210.22X.523	224	01/1991 → 12/1992		35	24	063320060010	**MAN772**
330-30 H	8210.22X.235, 8210.22X.523	224	12/1985 → 12/1992		35	24	063320060010	**MAN772**
330-30 H	8210.22X.235, 8210.22X.523	224	01/1988 → 12/1990		35	24	063320060010	**MAN772**
330-30 H	8210.22X.235, 8210.22X.523	224	01/1988 → 12/1990		55	24	063534690480	**MAN2009**
330-30 H	8210.22X.235, 8210.22X.523	224	01/1991 → 12/1992		55	24	063534690480	**MAN2009**
330-30 H	8210.22X.235, 8210.22X.523	224	06/1984 → 12/1990		55	24	063534690480	**MAN2009**
330-30 H	8210.22X.235, 8210.22X.523	224	06/1984 → 12/1992		55	24	063534690480	**MAN2009**
330-30 HT	8210.22X.235, 8210.22X.523	224	01/1991 → 12/1992		27	12	063304087010	**MAN873**
330-30 HT	8210.22X.235, 8210.22X.523	224	01/1988 → 12/1990		27	12	063304087010	**MAN873**

		kW ÷ kW			A	V	MAGNETI MARELLI LONG	MAGNETI MARELLI SHORT
IVECO								
P/PA								
330-30 HT	8210.22X.235, 8210.22X.523	224	01/1988 → 12/1992		27	12	063304087010	**MAN873**
330-30 HT	8210.22X.235, 8210.22X.523	224	01/1991 → 12/1992		35	24	063320060010	**MAN772**
330-30 HT	8210.22X.235, 8210.22X.523	224	01/1988 → 12/1992		35	24	063320060010	**MAN772**
330-30 HT	8210.22X.235, 8210.22X.523	224	01/1988 → 12/1990		35	24	063320060010	**MAN772**
330-30 HT	8210.22X.235, 8210.22X.523	224	01/1988 → 12/1990		55	24	063534690480	**MAN2009**
330-30 HT	8210.22X.235, 8210.22X.523	224	01/1988 → 12/1992		55	24	063534690480	**MAN2009**
330-30 HT	8210.22X.235, 8210.22X.523	224	01/1991 → 12/1992		55	24	063534690480	**MAN2009**
330-30 HW	8210.22X.235, 8210.22X.523	224	01/1991 → 12/1992		27	12	063304087010	**MAN873**
330-30 HW	8210.22X.235, 8210.22X.523	224	01/1988 → 12/1990		27	12	063304087010	**MAN873**
330-30 HW	8210.22X.235, 8210.22X.523	224	01/1988 → 12/1992		27	12	063304087010	**MAN873**
330-30 HW	8210.22X.235, 8210.22X.523	224	01/1991 → 12/1992		35	24	063320060010	**MAN772**
330-30 HW	8210.22X.235, 8210.22X.523	224	01/1988 → 12/1990		35	24	063320060010	**MAN772**
330-30 HW	8210.22X.235, 8210.22X.523	224	01/1988 → 12/1992		35	24	063320060010	**MAN772**
330-30 HW	8210.22X.235, 8210.22X.523	224	01/1988 → 12/1990		55	24	063534690480	**MAN2009**
330-30 HW	8210.22X.235, 8210.22X.523	224	01/1991 → 12/1992		55	24	063534690480	**MAN2009**
330-30 HW	8210.22X.235, 8210.22X.523	224	01/1988 → 12/1992		55	24	063534690480	**MAN2009**
330-36 H	8210.42.210, 8210.42.235, 8210.42.237, 8210.42.269, 8210.42.270, 8210.42.271	265	01/1989 → 12/1990		55	24	063534690480	**MAN2009**
330-36 H	8210.42.210, 8210.42.235, 8210.42.237, 8210.42.269, 8210.42.270, 8210.42.271	265	10/1991 → 12/1992		55	24	063534690480	**MAN2009**
330-36 HT	8210.42.210, 8210.42.235, 8210.42.237, 8210.42.269, 8210.42.270, 8210.42.271	265	10/1991 → 12/1992		55	24	063534690480	**MAN2009**

		kW ÷ kW		i	A	V	LONG	SHORT
IVECO								
P/PA								
330-36 HW	8210.42.210, 8210.42.235, 8210.42.237, 8210.42.269, 8210.42.270, 8210.42.271	265	10/1991 → 12/1992		55	24	063534690480	**MAN2009**
P/PA-Haubenfahrzeuge								
120-13 ANW	BF6L 913 T, F6L 913	96 99	01/1983 → 05/1983		27	24	063534897070	**MAN2019**
120-16 ANW,120-17 ANW	BF6L 913	118	01/1983 → 11/1989		30	24	063320025010	**MAN261**
120-16 ANW,120-17 ANW	BF6L 913	118	01/1983 → 05/1983		27	24	063534897070	**MAN2019**
150-16 AN	BF6L 913	118	01/1983 → 05/1983		27	24	063534897070	**MAN2019**
150-16 ANW	BF6L 913	118	01/1983 → 12/1991		27	24	063534897070	**MAN2019**
160-23 ANW	F8L 413 F	168	04/1985 → 12/1985		27	24	063534897070	**MAN2019**
160-23 ANW	F8L 413 F	168	01/1988 → 02/1988		27	24	063534897070	**MAN2019**
160-23 ANW	F8L 413 F	168	01/1986 → 02/1988		27	24	063534897070	**MAN2019**
160-23 ANW	F8L 413 F	168	04/1984 → 12/1985		27	24	063534897070	**MAN2019**
190-25 ANT	F8L 413 F	188	07/1983 → 06/1986		27	24	063534897070	**MAN2019**
190-30 N	8210.22.175	224	01/1991 → 12/1993		30	24	063320025010	**MAN261**
190-30 N	8210.22.175	224	04/1987 → 12/1990		30	24	063320025010	**MAN261**
190-30 N	8210.22.175	224	01/1991 → 12/1993		55	24	063534690480	**MAN2009**
190-30 N	8210.22.175	224	04/1987 → 12/1990		55	24	063534690480	**MAN2009**
190-30 NT	8210.22.175	224	04/1987 → 12/1990		30	24	063320025010	**MAN261**
190-30 NT	8210.22.175	224	01/1991 → 12/1993		30	24	063320025010	**MAN261**
190-30 NT	8210.22.175	224	01/1991 → 12/1993		55	24	063534690480	**MAN2009**
190-30 NT	8210.22.175	224	04/1987 → 12/1990		55	24	063534690480	**MAN2009**
260-25 AN	F8L 413 F	188	07/1983 → 06/1986		27	24	063534897070	**MAN2019**
260-25 ANW	F8L 413 F	188	07/1983 → 06/1986		27	24	063534897070	**MAN2019**
330-30 N	8210.22X.069, 8210.22X.575	224	10/1987 → 12/1992		27	12	063304087010	**MAN873**
330-30 N	8210.22X.069, 8210.22X.575	224	10/1987 → 12/1990		27	12	063304087010	**MAN873**
330-30 N	8210.22X.069, 8210.22X.575	224	01/1991 → 12/1992		27	12	063304087010	**MAN873**
330-30 N	8210.22X.069, 8210.22X.575	224	10/1987 → 12/1992		35	24	063320060010	**MAN772**
330-30 N	8210.22X.069, 8210.22X.575	224	01/1991 → 12/1992		35	24	063320060010	**MAN772**
330-30 N	8210.22X.069, 8210.22X.575	224	10/1987 → 12/1990		35	24	063320060010	**MAN772**
330-30 N	8210.22X.069, 8210.22X.575	224	10/1987 → 12/1990		55	24	063534690480	**MAN2009**

		kW ÷ kW			A	V	LONG	SHORT
IVECO								
P/PA-Haubenfahrzeuge								
330-30 N	8210.22X.069, 8210.22X.575	224	10/1987 → 12/1992		55	24	063534690480	**MAN2009**
330-30 N	8210.22X.069, 8210.22X.575	224	01/1991 → 12/1992		55	24	063534690480	**MAN2009**
330-30 NW	8210.22X.069, 8210.22X.575	224	10/1987 → 12/1992		27	12	063304087010	**MAN873**
330-30 NW	8210.22X.069, 8210.22X.575	224	10/1987 → 12/1990		27	12	063304087010	**MAN873**
330-30 NW	8210.22X.069, 8210.22X.575	224	01/1991 → 12/1992		27	12	063304087010	**MAN873**
330-30 NW	8210.22X.069, 8210.22X.575	224	01/1991 → 12/1992		35	24	063320060010	**MAN772**
330-30 NW	8210.22X.069, 8210.22X.575	224	10/1987 → 12/1990		35	24	063320060010	**MAN772**
330-30 NW	8210.22X.069, 8210.22X.575	224	10/1987 → 12/1992		35	24	063320060010	**MAN772**
330-30 NW	8210.22X.069, 8210.22X.575	224	10/1987 → 12/1990		55	24	063534690480	**MAN2009**
330-30 NW	8210.22X.069, 8210.22X.575	224	10/1987 → 12/1992		55	24	063534690480	**MAN2009**
330-30 NW	8210.22X.069, 8210.22X.575	224	01/1991 → 12/1992		55	24	063534690480	**MAN2009**
Stralis								
AD 190S27, AT 190S27	F2BE0681F	200	04/2004 → 03/2006		90	24	063535255000	**MAN2025**
AD 190S27, AT 190S27	F2BE0681C, F2BE0681F	200	08/2003 → 03/2006		90	24	063535255000	**MAN2025**
AD 190S30	F2BE0681E	218	04/2004 → 03/2006		90	24	063535255000	**MAN2025**
AD 190S35	F2BE0681A	259	04/2004 → 03/2006		90	24	063535255000	**MAN2025**
AD 190S35, AT 190S35, AD 190S36, AT 190S36	F2BE0681A, F2BE3681A	259 265	08/2003 → 03/2006		90	24	063535255000	**MAN2025**
AD 260S27, AT 260S27	F2BE0681F	200	04/2004 → 03/2006		90	24	063535255000	**MAN2025**
AD 260S30, AT 260S30	F2BE0681E	218	10/2005 → 03/2006		90	24	063535255000	**MAN2025**
AD 260S30, AT 260S30	F2BE0681E	218	04/2004 → 03/2006		90	24	063535255000	**MAN2025**
AD 260S31, AT 260S31	F2BE0681B	228	08/2003 → 03/2006		90	24	063535255000	**MAN2025**
AD 260S35	F2BE0681A	259	04/2004 → 03/2006		90	24	063535255000	**MAN2025**
AD 260S35, AT 260S35, AD 260S36, AT 260S36	F2BE0681A, F2BE3681A	259 265	08/2003 → 03/2006		90	24	063535255000	**MAN2025**
AD 440S31, AT 440S31	F2BE0681B	228	08/2003 → 03/2006		90	24	063535255000	**MAN2025**
AD 440S35, AT 440S35, AD 440S36, AT 440S36	F2BE0681A, F2BE3681A	259 265	08/2003 →		90	24	063535255000	**MAN2025**
Trakker								
AD 180T27 W, AT 180T27 W	F2BE0681F	200	06/2005 → 03/2006		90	24	063535255000	**MAN2025**

		kW ÷ kW		i	A	V	MAGNETI MARELLI LONG	MAGNETI MARELLI SHORT
IVECO								
Trakker								
AD 190T27, AT 190T27	F2BE0681F	200	06/2005 → 03/2006		90	24	063535255000	**MAN2025**
AD 190T31 W, AT 190T31 W	F2BE0681B, F2BE3681C	228	06/2005 → 09/2006		90	24	063535255000	**MAN2025**
AD 190T31 W, AT 190T31 W	F2BE0681B	228	10/2004 → 03/2006		90	24	063535255000	**MAN2025**
AD 190T31, AT 190T31	F2BE0681B	228	10/2004 → 03/2006		90	24	063535255000	**MAN2025**
AD 190T31, AT 190T31	F2BE0681B	228	10/2004 → 09/2006		90	24	063535255000	**MAN2025**
AD 190T35 W, AD 190T36 W, AT 190T35 W, AT 190T36 W	F2BE0681A, F2BE3681A	259 265	10/2004 → 03/2006		90	24	063535255000	**MAN2025**
AD 190T35 W, AT 190T35 W, AD 190T36 W, AT 190T36 W	F2BE0681A, F2BE3681A	259 265	01/2005 → 03/2006		90	24	063535255000	**MAN2025**
AD 190T35, AD 190T36, AT 190T35, AT 190T36	F2BE0681A, F2BE3681A	259 265	10/2004 → 03/2006		90	24	063535255000	**MAN2025**
AD 190T35, AT 190T35, AD 190T36, AT 190T36	F2BE0681A	259	06/2005 → 03/2006		90	24	063535255000	**MAN2025**
AD 260T31 B	F2BE0681B	228	06/2005 → 03/2006		90	24	063535255000	**MAN2025**
AD 260T31, AT 260T31	F2BE0681B	228	10/2004 → 03/2006		90	24	063535255000	**MAN2025**
AD 260T35 B	F2BE0681A	259	06/2005 → 03/2006		90	24	063535255000	**MAN2025**
AD 260T35 W, AT 260T35 W	F2BE0681A	259	06/2005 → 03/2006		90	24	063535255000	**MAN2025**
AD 260T35, 260T36, 380T36, AT 260T35, 260T36, 380T36	F2BE0681A, F2BE3681A	259 265	10/2004 → 03/2006		90	24	063535255000	**MAN2025**
AD 260T35, AT 260T35	F2BE0681A	259 265	10/2004 → 03/2006		90	24	063535255000	**MAN2025**
AD 340T35 B, AT 340T35 B	F2BE0681A	259	06/2005 → 03/2006		90	24	063535255000	**MAN2025**
AD 340T35, AT 340T35	F2BE0681A	259	06/2005 → 03/2006		90	24	063535255000	**MAN2025**
AD 380T35	F2BE0681A	259	01/2005 → 03/2006		90	24	063535255000	**MAN2025**
AD 400T35 T, AT 400T35 T	F2BE0681A	259	06/2005 → 03/2006		90	24	063535255000	**MAN2025**
AD 410T35	F2BE0681A	259	02/2005 → 03/2006		90	24	063535255000	**MAN2025**
TurboStar								
190-33	8210.22.105	243	07/1984 → 09/1986		30	24	063320025010	**MAN261**
190-33	8210.22.105	243	10/1986 → 05/1987		30	24	063320025010	**MAN261**
190-33	8210.22.105	243	07/1984 → 09/1986		55	24	063534690480	**MAN2009**
190-33	8210.22.105	243	10/1986 → 05/1987		55	24	063534690480	**MAN2009**
190-33 P	8210.22.105	243	01/1986 → 12/1987		30	24	063320025010	**MAN261**
190-33 P	8210.22.105	243	01/1986 → 05/1987		55	24	063534690480	**MAN2009**
190-33 T	8210.22.105	243	07/1984 → 09/1986		30	24	063320025010	**MAN261**
190-33 T	8210.22.105	243	10/1986 → 05/1987		30	24	063320025010	**MAN261**
190-33 T	8210.22.105	243	07/1984 → 09/1986		55	24	063534690480	**MAN2009**
190-33 T	8210.22.105	243	10/1986 → 05/1987		55	24	063534690480	**MAN2009**

		kW ÷ kW		i	A	V	MAGNETI MARELLI LONG	MAGNETI MARELLI SHORT
IVECO								
TurboStar								
190-36	8210.42.101	265	07/1987 → 06/1990		30	24	063320025010	**MAN261**
190-36	8210.42.101	265	07/1987 → 06/1990		55	24	063534690480	**MAN2009**
190-36	8210.42.152, 8210.42.154, 8210.42.162, 8210.42.181, 8210.42.182, 8210.42.191	277	07/1990 → 12/1993		30	24	063320025010	**MAN261**
190-36	8210.42.152, 8210.42.154, 8210.42.162, 8210.42.181, 8210.42.182, 8210.42.191	277	07/1990 → 12/1993		80	24	063534681240	**MAN2006**
190-36	8210.42.152, 8210.42.154, 8210.42.162, 8210.42.181, 8210.42.182, 8210.42.191	277	07/1990 → 12/1993		55	24	063534690480	**MAN2009**
190-36 P	8210.42.101	265	07/1987 → 06/1990		30	24	063320025010	**MAN261**
190-36 P	8210.42.101	265	07/1987 → 06/1990		55	24	063534690480	**MAN2009**
190-36 P	8210.42.152, 8210.42.154, 8210.42.162, 8210.42.181, 8210.42.182, 8210.42.191	277	07/1990 → 12/1993		30	24	063320025010	**MAN261**
190-36 P	8210.42.152, 8210.42.154, 8210.42.162, 8210.42.181, 8210.42.182, 8210.42.191	277	07/1990 → 12/1993		80	24	063534681240	**MAN2006**
190-36 P	8210.42.152, 8210.42.154, 8210.42.162, 8210.42.181, 8210.42.182, 8210.42.191	277	07/1990 → 12/1993		55	24	063534690480	**MAN2009**
190-36 T	8210.42.101	265	07/1987 → 06/1990		30	24	063320025010	**MAN261**
190-36 T	8210.42.101	265	07/1987 → 06/1990		55	24	063534690480	**MAN2009**
190-36 T	8210.42.152, 8210.42.154, 8210.42.162, 8210.42.181, 8210.42.182, 8210.42.191	277	07/1990 → 12/1993		30	24	063320025010	**MAN261**
190-36 T	8210.42.152, 8210.42.154, 8210.42.162, 8210.42.181, 8210.42.182, 8210.42.191	277	07/1990 → 12/1993		80	24	063534681240	**MAN2006**

		kW ÷ kW		i	A	V	MAGNETI MARELLI LONG	MAGNETI MARELLI SHORT
IVECO								
TurboStar								
190-36 T	8210.42.152, 8210.42.154, 8210.42.162, 8210.42.181, 8210.42.182, 8210.42.191	277	07/1990 → 12/1993		55	24	063534690480	**MAN2009**
190-42	8280.22.201, 8280.22.205	309	07/1984 → 09/1986		55	24	063534690480	**MAN2009**
190-42 T	8280.22.201, 8280.22.205	309	07/1984 → 09/1986		30	24	063320025010	**MAN261**
190-42 T	8280.22.201, 8280.22.205	309	07/1984 → 09/1986		55	24	063534690480	**MAN2009**
190-42 T	8280.22.201, 8280.22.205	309	10/1986 → 12/1990		30	24	063320025010	**MAN261**
190-48	8280.42.001, 8280.42.050	350	03/1989 → 03/1991		30	24	063320025010	**MAN261**
190-48	8280.42.001, 8280.42.050	350	04/1991 → 12/1993		30	24	063320025010	**MAN261**
190-48	8280.42.001, 8280.42.050	350	03/1989 → 03/1991		80	24	063534681240	**MAN2006**
190-48	8280.42.001, 8280.42.050	350	04/1991 → 12/1993		80	24	063534681240	**MAN2006**
190-48	8280.42.001, 8280.42.050	350	03/1989 → 03/1991		55	24	063534690480	**MAN2009**
190-48	8280.42.001, 8280.42.050	350	04/1991 → 12/1993		55	24	063534690480	**MAN2009**
190-48 T	8280.42.001, 8280.42.050	350	03/1989 → 03/1991		80	24	063534681240	**MAN2006**
190-48 T	8280.42.001, 8280.42.050	350	04/1991 → 12/1993		80	24	063534681240	**MAN2006**
190-48 T	8280.42.001, 8280.42.050	350	03/1989 → 03/1991		55	24	063534690480	**MAN2009**
190-48 T	8280.42.001, 8280.42.050	350	04/1991 → 12/1993		55	24	063534690480	**MAN2009**
TurboTech								
190-26	8460.21.102	191	01/1990 → 12/1992		55	24	063534690480	**MAN2009**
190-26 T	8460.21.102	191	01/1990 → 12/1992		55	24	063534690480	**MAN2009**
190-32	8460.41.102	234	01/1990 → 12/1992		55	24	063534690480	**MAN2009**
190-32 T	8460.41.102	234	01/1990 → 12/1992		55	24	063534690480	**MAN2009**
190-36	8210.42.151, 8210.42.161, 8210.42.171	277	07/1990 → 12/1992		80	24	063534681240	**MAN2006**
190-36	8210.42.151, 8210.42.161, 8210.42.171	277	07/1990 → 12/1992		55	24	063534690480	**MAN2009**
190-36 T	8210.42.151, 8210.42.161, 8210.42.171	277	07/1990 → 12/1992		80	24	063534681240	**MAN2006**

		kW ÷ kW		i	A	V	LONG	SHORT
IVECO								
TurboTech								
190-36 T	8210.42.151, 8210.42.161, 8210.42.171	277	07/1990 → 12/1992		55	24	063534690480	**MAN2009**
220-36 PT	8210.42.152, 8210.42.155, 8210.42.172	277	01/1990 → 12/1992		30	24	063320025010	**MAN261**
220-36 PT	8210.42.152, 8210.42.155, 8210.42.172	277	07/1990 → 12/1992		80	24	063534681240	**MAN2006**
220-36 PT	8210.42.152, 8210.42.155, 8210.42.172	277	07/1990 → 12/1992		55	24	063534690480	**MAN2009**
240-36 P	8210.42.155, 8210.42.165, 8210.42.175, 8210.42.185, 8210.42.186, 8210.42.195	277	07/1990 → 12/1992		80	24	063534681240	**MAN2006**
240-36 P	8210.42.155, 8210.42.165, 8210.42.175, 8210.42.185, 8210.42.186, 8210.42.195	277	07/1990 → 12/1992		55	24	063534690480	**MAN2009**
Zeta								
109-14	8060.04.689	99	06/1983 → 12/1985		35	24	063320060010	**MAN772**
109-14	8060.04.689	99	12/1985 → 12/1985		55	12	063324145010	**MAN100**
109-14	8060.04.689	99	12/1985 → 12/1985		27	12	063304087010	**MAN873**
109-14	8060.05.289	101 102	11/1985 → 03/1991		27	12	063304087010	**MAN873**
109-14	8060.05.289	101 102	11/1985 → 03/1991		30	24	063320025010	**MAN261**
109-14	8060.05.289	101 102	11/1985 → 03/1991		35	24	063320060010	**MAN772**
109-14	8060.05.289	101 102	11/1985 → 03/1991		55	24	063534690480	**MAN2009**
109-14 H	8060.04.689	99	06/1983 → 12/1985		35	24	063320060010	**MAN772**
109-14 H	8060.04.689	99	12/1985 → 12/1985		55	12	063324145010	**MAN100**
109-14 H	8060.04.689	99	12/1985 → 12/1985		27	12	063304087010	**MAN873**
109-14 H	8060.05.289	101 102	11/1985 → 03/1991		27	12	063304087010	**MAN873**
109-14 H	8060.05.289	101 102	11/1985 → 03/1991		30	24	063320025010	**MAN261**
109-14 H	8060.05.289	101 102	11/1985 → 03/1991		35	24	063320060010	**MAN772**
109-14 H	8060.05.289	101 102	11/1985 → 03/1991		55	24	063534690480	**MAN2009**
50-10	8340.04.200, 8340.04.250, 8340.04.300, 8340.04.362	74	01/1979 → 10/1983		30	24	063320025010	**MAN261**
50-10	8340.04.200, 8340.04.250, 8340.04.300, 8340.04.362	74	01/1979 → 10/1983		35	24	063320060010	**MAN772**
50-10 H	8340.04.200, 8340.04.250, 8340.04.300, 8340.04.362	74	01/1979 → 10/1983		30	24	063320025010	**MAN261**

		kW ÷ kW		i	A	V	MAGNETI MARELLI LONG	MAGNETI MARELLI SHORT
IVECO								
Zeta								
50-10 H	8340.04.200, 8340.04.250, 8340.04.300, 8340.04.362	74	01/1979 → 10/1983		35	24	063320060010	**MAN772**
50-10 V	8340.04.200, 8340.04.250, 8340.04.300, 8340.04.362	74	01/1979 → 10/1983		30	24	063320025010	**MAN261**
50-10 V	8340.04.200, 8340.04.250, 8340.04.300, 8340.04.362	74	01/1979 → 10/1983		35	24	063320060010	**MAN772**
50-8	8040.04.200	63	01/1983 → 12/1986		30	24	063320025010	**MAN261**
50-8	8040.04.200	63	01/1983 → 12/1986		35	24	063320060010	**MAN772**
50-8	8040.04.200	63	12/1985 → 12/1986		27	12	063304087010	**MAN873**
50-8	8040.04.200	63	12/1985 → 12/1986		55	12	063324145010	**MAN100**
50-8 H	8040.04.200	63	01/1983 → 12/1986		30	24	063320025010	**MAN261**
50-8 H	8040.04.200	63	01/1983 → 12/1986		35	24	063320060010	**MAN772**
50-8 H	8040.04.200	63	12/1985 → 12/1986		27	12	063304087010	**MAN873**
50-8 H	8040.04.200	63	12/1985 → 12/1986		55	12	063324145010	**MAN100**
50-8 V	8040.04.200	63	01/1983 → 12/1986		30	24	063320025010	**MAN261**
50-8 V	8040.04.200	63	01/1983 → 12/1986		35	24	063320060010	**MAN772**
50-8 V	8040.04.200	63	12/1985 → 12/1986		27	12	063304087010	**MAN873**
50-8 V	8040.04.200	63	12/1985 → 12/1986		55	12	063324145010	**MAN100**
50-9	8040.05.230	65	01/1987 → 03/1991		27	12	063304087010	**MAN873**
50-9	8040.05.230	65	01/1987 → 03/1991		30	24	063320025010	**MAN261**
50-9	8040.05.230	65	01/1987 → 03/1991		35	24	063320060010	**MAN772**
50-9	8040.05.230	65	02/1990 → 03/1991		55	24	063534690480	**MAN2009**
50-9 H	8040.05.230	65	01/1987 → 03/1991		27	12	063304087010	**MAN873**
50-9 H	8040.05.230	65	01/1987 → 03/1991		30	24	063320025010	**MAN261**
50-9 H	8040.05.230	65	01/1987 → 03/1991		35	24	063320060010	**MAN772**
50-9 H	8040.05.230	65	02/1990 → 03/1991		55	24	063534690480	**MAN2009**
50-9 V	8040.05.230	65	01/1987 → 03/1991		27	12	063304087010	**MAN873**
50-9 V	8040.05.230	65	01/1987 → 03/1991		30	24	063320025010	**MAN261**
50-9 V	8040.05.230	65	01/1987 → 03/1991		35	24	063320060010	**MAN772**
50-9 V	8040.05.230	65	02/1990 → 03/1991		55	24	063534690480	**MAN2009**
60-10	8340.04.200, 8340.04.250	74	07/1985 → 12/1986		27	12	063304087010	**MAN873**
60-10	8340.04.200, 8340.04.250	74	05/1982 → 12/1986		30	24	063320025010	**MAN261**
60-10	8340.04.200, 8340.04.250	74	05/1982 → 12/1986		35	24	063320060010	**MAN772**
60-10 H	8340.04.200, 8340.04.250	74	07/1985 → 12/1986		27	12	063304087010	**MAN873**
60-10 H	8340.04.200, 8340.04.250	74	05/1982 → 12/1986		30	24	063320025010	**MAN261**
60-10 H	8340.04.200, 8340.04.250	74	05/1982 → 12/1986		35	24	063320060010	**MAN772**

		kW ÷ kW			A	V	LONG	SHORT
IVECO								
Zeta								
60-10 V	8340.04.200, 8340.04.250	74	07/1985 → 12/1986		27	12	063304087010	**MAN873**
60-10 V	8340.04.200, 8340.04.250	74	05/1982 → 12/1986		30	24	063320025010	**MAN261**
60-10 V	8340.04.200, 8340.04.250	74	05/1982 → 12/1986		35	24	063320060010	**MAN772**
60-11	8040.25.230 R	74	01/1987 → 03/1991		27	12	063304087010	**MAN873**
60-11	8040.25.230 R	74	01/1987 → 03/1991		30	24	063320025010	**MAN261**
60-11	8040.25.230 R	74	01/1987 → 03/1991		35	24	063320060010	**MAN772**
60-11 V	8040.25.230 R	74	01/1987 → 03/1991		27	12	063304087010	**MAN873**
60-11 V	8040.25.230 R	74	01/1987 → 03/1991		30	24	063320025010	**MAN261**
60-11 V	8040.25.230 R	74	01/1987 → 03/1991		35	24	063320060010	**MAN772**
60-8	8040.04.200	63	11/1979 → 12/1981		30	24	063320025010	**MAN261**
60-8	8040.04.200	63	11/1979 → 12/1982		30	24	063320025010	**MAN261**
60-8	8040.04.200	63	01/1983 → 04/1983		35	24	063320060010	**MAN772**
65-10	8340.04.200, 8340.04.250, 8340.04.300, 8340.04.350	74	05/1983 → 01/1987		30	24	063320025010	**MAN261**
65-10	8340.04.200, 8340.04.250, 8340.04.300, 8340.04.350	74	05/1982 → 01/1987		35	24	063320060010	**MAN772**
65-10 H	8340.04.200, 8340.04.250, 8340.04.300, 8340.04.350	74	05/1983 → 01/1987		30	24	063320025010	**MAN261**
65-10 H	8340.04.200, 8340.04.250, 8340.04.300, 8340.04.350	74	05/1982 → 01/1987		35	24	063320060010	**MAN772**
65-10 V	8340.04.200, 8340.04.250, 8340.04.300, 8340.04.350	74	05/1983 → 01/1987		30	24	063320025010	**MAN261**
65-10 V	8340.04.200, 8340.04.250, 8340.04.300, 8340.04.350	74	05/1982 → 01/1987		35	24	063320060010	**MAN772**
65-12	8040.25.200	85	01/1987 → 03/1991		27	12	063304087010	**MAN873**
65-12	8040.25.200	85	01/1987 → 03/1991		30	24	063320025010	**MAN261**
65-12	8040.25.200	85	01/1987 → 03/1991		35	24	063320060010	**MAN772**
65-12	8040.25.200	85	01/1987 → 03/1991		55	24	063534690480	**MAN2009**
65-12 H	8040.25.200	85	01/1987 → 03/1991		27	12	063304087010	**MAN873**
65-12 H	8040.25.200	85	01/1987 → 03/1991		30	24	063320025010	**MAN261**
65-12 H	8040.25.200	85	01/1987 → 03/1991		35	24	063320060010	**MAN772**
65-12 H	8040.25.200	85	01/1987 → 03/1991		55	24	063534690480	**MAN2009**
65-12 V	8040.25.200	85	01/1987 → 03/1991		27	12	063304087010	**MAN873**
65-12 V	8040.25.200	85	01/1987 → 03/1991		30	24	063320025010	**MAN261**
65-12 V	8040.25.200	85	01/1987 → 03/1991		35	24	063320060010	**MAN772**

		kW ÷ kW		i	A	V	LONG	SHORT
IVECO								
Zeta								
65-12 V	8040.25.200	85	01/1987 → 03/1991		55	24	063534690480	**MAN2009**
65-9	8040.05.230	65	01/1987 → 03/1991		27	12	063304087010	**MAN873**
65-9	8040.05.230	65	01/1987 → 03/1991		35	24	063320060010	**MAN772**
65-9	8040.05.230	65	02/1990 → 03/1991		55	24	063534690480	**MAN2009**
79-10	8340.04.200, 8340.04.300	74	01/1983 → 01/1987		30	24	063320025010	**MAN261**
79-10	8340.04.200, 8340.04.300	74	01/1983 → 01/1987		35	24	063320060010	**MAN772**
79-10	8340.04.200, 8340.04.300	74	07/1985 → 01/1987		27	12	063304087010	**MAN873**
79-10 H	8340.04.200, 8340.04.300	74	01/1983 → 01/1987		30	24	063320025010	**MAN261**
79-10 H	8340.04.200, 8340.04.300	74	01/1983 → 01/1987		35	24	063320060010	**MAN772**
79-10 H	8340.04.200, 8340.04.300	74	07/1985 → 01/1987		27	12	063304087010	**MAN873**
79-10 V	8340.04.200, 8340.04.300	74	01/1983 → 01/1987		30	24	063320025010	**MAN261**
79-10 V	8340.04.200, 8340.04.300	74	01/1983 → 01/1987		35	24	063320060010	**MAN772**
79-10 V	8340.04.200, 8340.04.300	74	07/1985 → 01/1987		27	12	063304087010	**MAN873**
79-12	8040.25.200, 8040.25.220	85	01/1987 → 03/1991		27	12	063304087010	**MAN873**
79-12	8040.25.200, 8040.25.220	85	01/1987 → 03/1991		30	24	063320025010	**MAN261**
79-12	8040.25.200, 8040.25.220	85	01/1987 → 03/1991		35	24	063320060010	**MAN772**
79-12 H	8040.25.200, 8040.25.220	85	01/1987 → 03/1991		27	12	063304087010	**MAN873**
79-12 H	8040.25.200, 8040.25.220	85	01/1987 → 03/1991		30	24	063320025010	**MAN261**
79-12 H	8040.25.200, 8040.25.220	85	01/1987 → 03/1991		35	24	063320060010	**MAN772**
79-12 V	8040.25.200, 8040.25.220	85	01/1987 → 03/1991		27	12	063304087010	**MAN873**
79-12 V	8040.25.200, 8040.25.220	85	01/1987 → 03/1991		30	24	063320025010	**MAN261**
79-12 V	8040.25.200, 8040.25.220	85	01/1987 → 03/1991		35	24	063320060010	**MAN772**
79-13	8060.04.060, 8060.04.660	96	11/1979 → 12/1983		30	24	063320025010	**MAN261**
79-13	8060.04.060, 8060.04.660	96	01/1983 → 06/1983		35	24	063320060010	**MAN772**

		kW ÷ kW			A	V	LONG	SHORT
IVECO								
Zeta								
79-14	8060.05.280	101	12/1985 → 03/1991		27	12	063304087010	**MAN873**
79-14	8060.05.280	101	12/1985 → 03/1991		30	24	063320025010	**MAN261**
79-14	8060.05.280	101	12/1985 → 03/1991		35	24	063320060010	**MAN772**
79-14	8060.04.660	99	07/1983 → 11/1985		35	24	063320060010	**MAN772**
79-14	8060.05.280	101	12/1985 → 03/1991		55	24	063534690480	**MAN2009**
79-14 H	8060.05.280	101	12/1985 → 03/1991		27	12	063304087010	**MAN873**
79-14 H	8060.05.280	101	12/1985 → 03/1991		30	24	063320025010	**MAN261**
79-14 H	8060.05.280	101	12/1985 → 03/1991		35	24	063320060010	**MAN772**
79-14 H	8060.04.660	99	07/1983 → 11/1985		35	24	063320060010	**MAN772**
79-14 H	8060.05.280	101	12/1985 → 03/1991		55	24	063534690480	**MAN2009**
79-14 V	8060.05.280	101	12/1985 → 03/1991		27	12	063304087010	**MAN873**
79-14 V	8060.05.280	101	12/1985 → 03/1991		30	24	063320025010	**MAN261**
79-14 V	8060.05.280	101	12/1985 → 03/1991		35	24	063320060010	**MAN772**
79-14 V	8060.04.660	99	07/1983 → 11/1985		35	24	063320060010	**MAN772**
79-14 V	8060.05.280	101	12/1985 → 03/1991		55	24	063534690480	**MAN2009**
95-14	8060.04.669	101	11/1985 → 03/1991		30	24	063320025010	**MAN261**
95-14	8060.04.669	99	07/1983 → 10/1985		30	24	063320025010	**MAN261**
95-14	8060.04.669	99	07/1983 → 10/1985		35	24	063320060010	**MAN772**
95-14 H	8060.04.669	99	07/1983 → 10/1985		30	24	063320025010	**MAN261**
95-14 H	8060.04.669	101	11/1985 → 03/1991		30	24	063320025010	**MAN261**
95-14 H	8060.04.669	99	07/1983 → 10/1985		35	24	063320060010	**MAN772**
A 60-9	8040.05.200, 8040.05.203	65	09/1988 → 12/1992		55	24	063534690480	**MAN2009**
A 70-12	8340.05.200	84	01/1983 → 01/1985		35	24	063320060010	**MAN772**
A 70-14	8060.05.246, 8060.05.285	101 102	05/1988 → 12/1992		27	12	063304087010	**MAN873**
A 70-14	8060.05.246, 8060.05.285	101 102	05/1988 → 12/1992		35	24	063320060010	**MAN772**
A 70-14	8060.05.246, 8060.05.285	101 102	05/1988 → 12/1992		55	24	063534690480	**MAN2009**
MAN								
E 2000								
19.310 FALK	D 2866 LF23	228	05/2000 → 06/2003		55	24	063534699820	**MAN2011**
19.310 FALK	D 2866 LF23	228	05/2000 → 06/2003		100	24	063535255010	**MAN2026**
19.310 FALS	D 2866 LF23	228	05/2000 → 06/2003		55	24	063534699820	**MAN2011**
19.310 FALS	D 2866 LF23	228	05/2000 → 06/2003		100	24	063535255010	**MAN2026**
19.310 FLK	D 2866 LF23	228	05/2000 → 06/2003		55	24	063534699820	**MAN2011**
19.310 FLK	D 2866 LF23	228	05/2000 → 06/2003		100	24	063535255010	**MAN2026**
19.310 FLS	D 2866 LF23	228	05/2000 → 06/2003		55	24	063534699820	**MAN2011**
19.310 FLS	D 2866 LF23	228	05/2000 → 06/2003		100	24	063535255010	**MAN2026**
19.360 FALK	D 2866 LF24	265	07/2001 → 06/2003		55	24	063534699820	**MAN2011**
19.360 FALK	D 2866 LF24	265	07/2001 → 06/2003		100	24	063535255010	**MAN2026**
19.360 FALS	D 2866 LF24	265	07/2001 → 06/2003		55	24	063534699820	**MAN2011**
19.360 FALS	D 2866 LF24	265	07/2001 → 06/2003		100	24	063535255010	**MAN2026**

		kW ÷ kW		i	A	V	MAGNETI MARELLI LONG	MAGNETI MARELLI SHORT
MAN								
E 2000								
19.360 FLK	D 2866 LF24	265	07/2001 → 06/2003		55	24	063534699820	**MAN2011**
19.360 FLK	D 2866 LF24	265	07/2001 → 06/2003		100	24	063535255010	**MAN2026**
19.360 FLS	D 2866 LF24	265	07/2001 → 06/2003		55	24	063534699820	**MAN2011**
19.360 FLS	D 2866 LF24	265	07/2001 → 06/2003		100	24	063535255010	**MAN2026**
19.410 FALK	D 2866 LF25	301	07/2001 → 06/2003		55	24	063534699820	**MAN2011**
19.410 FALK	D 2866 LF25	301	07/2001 → 06/2003		100	24	063535255010	**MAN2026**
19.410 FALS	D 2866 LF25	301	07/2001 → 06/2003		55	24	063534699820	**MAN2011**
19.410 FALS	D 2866 LF25	301	07/2001 → 06/2003		100	24	063535255010	**MAN2026**
19.410 FLK	D 2866 LF25	301	07/2001 → 06/2003		55	24	063534699820	**MAN2011**
19.410 FLK	D 2866 LF25	301	07/2001 → 06/2003		100	24	063535255010	**MAN2026**
19.410 FLS	D 2866 LF25	301	07/2001 → 06/2003		55	24	063534699820	**MAN2011**
19.410 FLS	D 2866 LF25	301	07/2001 → 06/2003		100	24	063535255010	**MAN2026**
19.460 FALK	D 2876 LF 03	338	07/2001 → 06/2003		55	24	063534699820	**MAN2011**
19.460 FALK	D 2876 LF 03	338	07/2001 → 06/2003		100	24	063535255010	**MAN2026**
19.460 FALS	D 2876 LF 03	338	07/2001 → 06/2003		55	24	063534699820	**MAN2011**
19.460 FALS	D 2876 LF 03	338	07/2001 → 06/2003		100	24	063535255010	**MAN2026**
19.460 FLK	D 2876 LF 03	338	07/2001 → 06/2003		55	24	063534699820	**MAN2011**
19.460 FLK	D 2876 LF 03	338	07/2001 → 06/2003		100	24	063535255010	**MAN2026**
19.460 FLS	D 2876 LF 03	338	07/2001 → 06/2003		55	24	063534699820	**MAN2011**
19.460 FLS	D 2876 LF 03	338	07/2001 → 06/2003		100	24	063535255010	**MAN2026**
26.360 FAVLC	D 2866 LF24	265	05/2000 → 10/2003		55	24	063534699820	**MAN2011**
26.360 FAVLC	D 2866 LF24	265	05/2000 → 10/2003		100	24	063535255010	**MAN2026**
26.360 FAVLK	D 2866 LF24	265	05/2000 → 10/2003		55	24	063534699820	**MAN2011**
26.360 FAVLK	D 2866 LF24	265	05/2000 → 10/2003		100	24	063535255010	**MAN2026**
26.410 DFARC	D 2866 LF25	301	05/2000 → 10/2003		55	24	063534699820	**MAN2011**
26.410 DFARC	D 2866 LF25	301	05/2000 → 10/2003		100	24	063535255010	**MAN2026**
26.410 DFRC, FAVLC	D 2866 LF25	301	05/2000 → 10/2003		55	24	063534699820	**MAN2011**
26.410 DFRC, FAVLC	D 2866 LF25	301	05/2000 → 10/2003		100	24	063535255010	**MAN2026**
26.410 FAVLK	D 2866 LF25	301	05/2000 → 10/2003		55	24	063534699820	**MAN2011**
26.410 FAVLK	D 2866 LF25	301	05/2000 → 10/2003		100	24	063535255010	**MAN2026**
26.460 DFARC	D 2876 LF 03	338	05/2000 → 10/2003		55	24	063534699820	**MAN2011**
26.460 DFARC	D 2876 LF 03	338	05/2000 → 10/2003		100	24	063535255010	**MAN2026**
26.460 DFLRS	D 2876 LF 03	338	05/2000 → 10/2003		55	24	063534699820	**MAN2011**
26.460 DFLRS	D 2876 LF 03	338	05/2000 → 10/2003		100	24	063535255010	**MAN2026**
26.460 FAVLC	D 2876 LF 03	338	05/2000 → 10/2003		55	24	063534699820	**MAN2011**
26.460 FAVLC	D 2876 LF 03	338	05/2000 → 10/2003		100	24	063535255010	**MAN2026**
26.460 FAVLK	D 2876 LF 03	338	05/2000 → 10/2003		55	24	063534699820	**MAN2011**
26.460 FAVLK	D 2876 LF 03	338	05/2000 → 10/2003		100	24	063535255010	**MAN2026**
28.310 FNLC	D 2866 LF23	228	09/2002 → 12/2003		55	24	063534699820	**MAN2011**
28.310 FNLC	D 2866 LF23	228	09/2002 → 06/2005		100	24	063535255010	**MAN2026**
28.360 FANLC	D 2866 LF24	265	05/2000 → 11/2003		55	24	063534699820	**MAN2011**
28.360 FANLC	D 2866 LF24	265	05/2000 → 11/2003		100	24	063535255010	**MAN2026**
28.360 FANLK	D 2866 LF24	265	05/2000 → 11/2003		55	24	063534699820	**MAN2011**
28.360 FANLK	D 2866 LF24	265	05/2000 → 11/2003		100	24	063535255010	**MAN2026**

		kW ÷ kW			A	V	LONG	SHORT
MAN								
E 2000								
28.360 FNALC	D 2866 LF24	265	05/2000 → 11/2003		55	24	063534699820	**MAN2011**
28.360 FNALC	D 2866 LF24	265	05/2000 → 11/2003		100	24	063535255010	**MAN2026**
28.360 FNLC	D 2866 LF24	265	05/2000 → 11/2003		55	24	063534699820	**MAN2011**
28.360 FNLC	D 2866 LF24	265	05/2000 → 11/2003		100	24	063535255010	**MAN2026**
28.410 FANLC	D 2866 LF25	301	05/2000 → 11/2003		55	24	063534699820	**MAN2011**
28.410 FANLC	D 2866 LF25	301	05/2000 → 11/2003		100	24	063535255010	**MAN2026**
28.410 FANLK	D 2866 LF25	301	05/2000 → 11/2003		55	24	063534699820	**MAN2011**
28.410 FANLK	D 2866 LF25	301	05/2000 → 11/2003		100	24	063535255010	**MAN2026**
28.410 FNLC	D 2866 LF25	301	05/2000 → 11/2003		55	24	063534699820	**MAN2011**
28.410 FNLC	D 2866 LF25	301	05/2000 → 11/2003		100	24	063535255010	**MAN2026**
28.460 FANLC	D 2876 LF 03	338	05/2000 → 11/2003		55	24	063534699820	**MAN2011**
28.460 FANLC	D 2876 LF 03	338	05/2000 → 11/2003		100	24	063535255010	**MAN2026**
28.460 FANLK	D 2876 LF 03	338	05/2000 → 11/2003		55	24	063534699820	**MAN2011**
28.460 FANLK	D 2876 LF 03	338	05/2000 → 11/2003		100	24	063535255010	**MAN2026**
28.460 FNLC	D 2876 LF 03	338	05/2000 → 11/2003		55	24	063534699820	**MAN2011**
28.460 FNLC	D 2876 LF 03	338	05/2000 → 11/2003		100	24	063535255010	**MAN2026**
30.310 FNLC	D 2866 LF23	228	05/2000 → 06/2002		55	24	063534699820	**MAN2011**
30.310 FNLC	D 2866 LF23	228	05/2000 → 06/2002		100	24	063535255010	**MAN2026**
30.360 FANLC	D 2866 LF24	265	05/2000 → 06/2003		55	24	063534699820	**MAN2011**
30.360 FANLC	D 2866 LF24	265	05/2000 → 06/2003		100	24	063535255010	**MAN2026**
30.360 FANLK	D 2866 LF24	265	05/2000 → 06/2003		55	24	063534699820	**MAN2011**
30.360 FANLK	D 2866 LF24	265	05/2000 → 06/2003		100	24	063535255010	**MAN2026**
30.360 FNLC	D 2866 LF24	265	05/2000 → 06/2003		55	24	063534699820	**MAN2011**
30.360 FNLC	D 2866 LF24	265	05/2000 → 06/2003		100	24	063535255010	**MAN2026**
30.410 FANLC	D 2866 LF25	301	05/2000 → 06/2003		55	24	063534699820	**MAN2011**
30.410 FANLC	D 2866 LF25	301	05/2000 → 06/2003		100	24	063535255010	**MAN2026**
30.410 FANLK	D 2866 LF25	301	05/2000 → 06/2003		55	24	063534699820	**MAN2011**
30.410 FANLK	D 2866 LF25	301	05/2000 → 06/2003		100	24	063535255010	**MAN2026**
30.410 FNLC	D 2866 LF25	301	05/2000 → 06/2003		55	24	063534699820	**MAN2011**
30.410 FNLC	D 2866 LF25	301	05/2000 → 06/2003		100	24	063535255010	**MAN2026**
30.460 FANLC	D 2876 LF 03	338	05/2000 → 06/2003		55	24	063534699820	**MAN2011**
30.460 FANLC	D 2876 LF 03	338	05/2000 → 06/2003		100	24	063535255010	**MAN2026**
30.460 FANLK	D 2876 LF 03	338	05/2000 → 06/2003		55	24	063534699820	**MAN2011**
30.460 FANLK	D 2876 LF 03	338	05/2000 → 06/2003		100	24	063535255010	**MAN2026**
30.460 FNLC	D 2876 LF 03	338	05/2000 → 06/2003		55	24	063534699820	**MAN2011**
30.460 FNLC	D 2876 LF 03	338	05/2000 → 06/2003		100	24	063535255010	**MAN2026**
32.310 VFLC	D 2866 LF23	228	05/2000 → 08/2002		55	24	063534699820	**MAN2011**
32.310 VFLC	D 2866 LF23	228	05/2000 → 08/2002		100	24	063535255010	**MAN2026**
32.310 VFNLC	D 2866 LF23	228	05/2000 → 08/2002		55	24	063534699820	**MAN2011**
32.310 VFNLC	D 2866 LF23	228	05/2000 → 08/2002		100	24	063535255010	**MAN2026**
32.360 VFLC	D 2866 LF24	265	05/2000 → 10/2003		55	24	063534699820	**MAN2011**
32.360 VFLC	D 2866 LF24	265	05/2000 → 10/2003		100	24	063535255010	**MAN2026**
32.360 VFNLC	D 2866 LF24	265	05/2000 → 10/2003		55	24	063534699820	**MAN2011**
32.360 VFNLC	D 2866 LF24	265	05/2000 → 10/2003		100	24	063535255010	**MAN2026**

		kW ÷ kW		i	A	V	MAGNETI MARELLI LONG	MAGNETI MARELLI SHORT
MAN								
E 2000								
32.410 VFARK	D 2866 LF25	301	05/2000 → 10/2003		55	24	063534699820	**MAN2011**
32.410 VFARK	D 2866 LF25	301	05/2000 → 10/2003		100	24	063535255010	**MAN2026**
32.410 VFLC,VFRC, VFLRC	D 2866 LF25	301	05/2000 → 10/2003		55	24	063534699820	**MAN2011**
32.410 VFLC,VFRC, VFLRC	D 2866 LF25	301	05/2000 → 10/2003		100	24	063535255010	**MAN2026**
32.410 VFNLC	D 2866 LF25	301	05/2000 → 10/2003		55	24	063534699820	**MAN2011**
32.410 VFNLC	D 2866 LF25	301	05/2000 → 10/2003		100	24	063535255010	**MAN2026**
32.460 VFLC, VFLRC	D 2876 LF 03	338	05/2000 → 10/2003		55	24	063534699820	**MAN2011**
32.460 VFLC, VFLRC	D 2876 LF 03	338	05/2000 → 10/2003		100	24	063535255010	**MAN2026**
32.460 VFNLC	D 2876 LF 03	338	05/2000 → 10/2003		55	24	063534699820	**MAN2011**
32.460 VFNLC	D 2876 LF 03	338	05/2000 → 10/2003		100	24	063535255010	**MAN2026**
33.360 DFAK, DFALK	D 2866 LF24	265	05/2000 → 06/2003		55	24	063534699820	**MAN2011**
33.360 DFAK, DFALK	D 2866 LF24	265	05/2000 → 06/2003		100	24	063535255010	**MAN2026**
33.360 DFALC	D 2866 LF24	265	05/2000 → 06/2003		55	24	063534699820	**MAN2011**
33.360 DFALC	D 2866 LF24	265	05/2000 → 06/2003		100	24	063535255010	**MAN2026**
33.360 DFALS	D 2866 LF24	265	04/2001 → 06/2003		55	24	063534699820	**MAN2011**
33.360 DFALS	D 2866 LF24	265	04/2001 → 06/2003		100	24	063535255010	**MAN2026**
33.360 DFLC	D 2866 LF24	265	05/2000 → 06/2003		55	24	063534699820	**MAN2011**
33.360 DFLC	D 2866 LF24	265	05/2000 → 06/2003		100	24	063535255010	**MAN2026**
33.360 DFLK	D 2866 LF24	265	05/2000 → 06/2003		55	24	063534699820	**MAN2011**
33.360 DFLK	D 2866 LF24	265	05/2000 → 06/2003		100	24	063535255010	**MAN2026**
33.360 DFLS	D 2866 LF24	265	05/2000 → 06/2003		55	24	063534699820	**MAN2011**
33.360 DFLS	D 2866 LF24	265	05/2000 → 06/2003		100	24	063535255010	**MAN2026**
33.410 DFAK, DFALK	D 2866 LF25	301	05/2000 → 06/2003		55	24	063534699820	**MAN2011**
33.410 DFAK, DFALK	D 2866 LF25	301	05/2000 → 06/2003		100	24	063535255010	**MAN2026**
33.410 DFALC	D 2866 LF25	301	05/2000 → 06/2003		55	24	063534699820	**MAN2011**
33.410 DFALC	D 2866 LF25	301	05/2000 → 06/2003		100	24	063535255010	**MAN2026**
33.410 DFALS	D 2866 LF25	301	04/2001 → 06/2003		55	24	063534699820	**MAN2011**
33.410 DFALS	D 2866 LF25	301	04/2001 → 06/2003		100	24	063535255010	**MAN2026**
33.410 DFLC	D 2866 LF25	301	05/2000 → 06/2003		55	24	063534699820	**MAN2011**
33.410 DFLC	D 2866 LF25	301	05/2000 → 06/2003		100	24	063535255010	**MAN2026**
33.410 DFLK	D 2866 LF25	301	05/2000 → 06/2003		55	24	063534699820	**MAN2011**
33.410 DFLK	D 2866 LF25	301	05/2000 → 06/2003		100	24	063535255010	**MAN2026**
33.410 DFLS	D 2866 LF25	301	05/2000 → 06/2003		55	24	063534699820	**MAN2011**
33.410 DFLS	D 2866 LF25	301	05/2000 → 06/2003		100	24	063535255010	**MAN2026**
33.460 DFAK, DFALK	D 2876 LF 03	338	05/2000 → 06/2003		55	24	063534699820	**MAN2011**
33.460 DFAK, DFALK	D 2876 LF 03	338	05/2000 → 06/2003		100	24	063535255010	**MAN2026**
33.460 DFALC	D 2876 LF 03	338	05/2000 → 06/2003		55	24	063534699820	**MAN2011**
33.460 DFALC	D 2876 LF 03	338	05/2000 → 06/2003		100	24	063535255010	**MAN2026**
33.460 DFALS	D 2876 LF 03	338	04/2001 → 06/2003		55	24	063534699820	**MAN2011**
33.460 DFALS	D 2876 LF 03	338	04/2001 → 06/2003		100	24	063535255010	**MAN2026**
33.460 DFLC	D 2876 LF 03	338	05/2000 → 06/2003		55	24	063534699820	**MAN2011**
33.460 DFLC	D 2876 LF 03	338	05/2000 → 06/2003		100	24	063535255010	**MAN2026**

		kW ÷ kW			A	V	LONG	SHORT
MAN								
E 2000								
33.460 DFLK	D 2876 LF 03	338	05/2000 → 06/2003		55	24	063534699820	**MAN2011**
33.460 DFLK	D 2876 LF 03	338	05/2000 → 06/2003		100	24	063535255010	**MAN2026**
33.460 DFLS	D 2876 LF 03	338	05/2000 → 06/2003		55	24	063534699820	**MAN2011**
33.460 DFLS	D 2876 LF 03	338	05/2000 → 06/2003		100	24	063535255010	**MAN2026**
35.360 VFAK	D 2866 LF24	265	05/2000 → 09/2003		55	24	063534699820	**MAN2011**
35.360 VFAK	D 2866 LF24	265	05/2000 → 09/2003		100	24	063535255010	**MAN2026**
35.410 FVNLC	D 2866 LF25	301	05/2000 → 10/2003		55	24	063534699820	**MAN2011**
35.410 FVNLC	D 2866 LF25	301	05/2000 → 10/2003		100	24	063535255010	**MAN2026**
35.410 VFAK	D 2866 LF25	301	05/2000 → 10/2003		55	24	063534699820	**MAN2011**
35.410 VFAK	D 2866 LF25	301	05/2000 → 10/2003		100	24	063535255010	**MAN2026**
35.460 FVNLC	D 2876 LF 03	338	05/2000 → 10/2003		55	24	063534699820	**MAN2011**
35.460 FVNLC	D 2876 LF 03	338	05/2000 → 10/2003		100	24	063535255010	**MAN2026**
35.460 VFAK	D 2876 LF 03	338	05/2000 → 10/2003		55	24	063534699820	**MAN2011**
35.460 VFAK	D 2876 LF 03	338	05/2000 → 10/2003		100	24	063535255010	**MAN2026**
41.410 VFAK	D 2866 LF25	301	05/2000 → 09/2003		55	24	063534699820	**MAN2011**
41.410 VFAK	D 2866 LF25	301	05/2000 → 09/2003		100	24	063535255010	**MAN2026**
41.460 DFVS, DFVLS	D 2876 LF 03	338	06/2000 → 09/2003		55	24	063534699820	**MAN2011**
41.460 DFVS, DFVLS	D 2876 LF 03	338	06/2000 → 09/2003		100	24	063535255010	**MAN2026**
41.460 VFAK	D 2876 LF 03	338	05/2000 → 09/2003		55	24	063534699820	**MAN2011**
41.460 VFAK	D 2876 LF 03	338	05/2000 → 09/2003		100	24	063535255010	**MAN2026**
50.410 VFAK	D 2866 LF25	301	05/2000 → 09/2003		55	24	063534699820	**MAN2011**
50.410 VFAK	D 2866 LF25	301	05/2000 → 09/2003		100	24	063535255010	**MAN2026**
50.410 VFAVK, VFAV-G	D 2866 LF25	301	03/2001 → 09/2003		55	24	063534699820	**MAN2011**
50.410 VFAVK, VFAV-G	D 2866 LF25	301	03/2001 → 09/2003		100	24	063535255010	**MAN2026**
50.410 VFK	D 2866 LF25	301	05/2000 → 09/2003		55	24	063534699820	**MAN2011**
50.410 VFK	D 2866 LF25	301	05/2000 → 09/2003		100	24	063535255010	**MAN2026**
50.410 VFVK, VFV-G	D 2866 LF25	301	10/2000 → 09/2003		55	24	063534699820	**MAN2011**
50.410 VFVK, VFV-G	D 2866 LF25	301	10/2000 → 09/2003		100	24	063535255010	**MAN2026**
50.460 VFAK	D 2876 LF 03	338	05/2000 → 09/2003		55	24	063534699820	**MAN2011**
50.460 VFAK	D 2876 LF 03	338	05/2000 → 09/2003		100	24	063535255010	**MAN2026**
50.460 VFAVK, VFAV-G	D 2876 LF 03	338	03/2001 → 09/2003		55	24	063534699820	**MAN2011**
50.460 VFAVK, VFAV-G	D 2876 LF 03	338	03/2001 → 09/2003		100	24	063535255010	**MAN2026**
50.460 VFK	D 2876 LF 03	338	05/2000 → 09/2003		55	24	063534699820	**MAN2011**
50.460 VFK	D 2876 LF 03	338	05/2000 → 09/2003		100	24	063535255010	**MAN2026**
50.460 VFVK, VFV-G	D 2876 LF 03	338	10/2000 → 09/2003		55	24	063534699820	**MAN2011**
50.460 VFVK, VFV-G	D 2876 LF 03	338	10/2000 → 09/2003		100	24	063535255010	**MAN2026**
EM								
EM 192	D 0826 LOH 06	140	10/1993 → 06/1997		55	24	063534699820	**MAN2011**
F 2000								
19.233 FCNG	E 2866 DF 01	170	09/1996 → 12/2001		55	24	063534699820	**MAN2011**
19.233 FKNG	E 2866 DF 01	170	01/1994 → 12/2001		55	24	063534699820	**MAN2011**
19.273 F, FL, FLL	D 2865 LF22	198	01/1994 → 12/1995		55	24	063534699820	**MAN2011**
19.273 FA	D 2865 LF22	198	01/1994 → 12/1995		55	24	063534699820	**MAN2011**
19.273 FAK	D 2865 LF22	198	01/1994 → 12/1995		55	24	063534699820	**MAN2011**

		kW ÷ kW		i	A	V	MAGNETI MARELLI LONG	MAGNETI MARELLI SHORT
MAN								
F 2000								
19.273 FK	D 2865 LF22	198	01/1994 → 12/1995		55	24	063534699820	**MAN2011**
19.273 FS,19.273 FLS	D 2865 LF22	198	01/1994 → 12/1995		55	24	063534699820	**MAN2011**
19.293 FAC	D 2865 LF20, D 2865 LF24	213	04/1995 → 01/2000		55	24	063534699820	**MAN2011**
19.293 FAK	D 2865 LF20, D 2865 LF24	213	04/1995 → 01/2000		55	24	063534699820	**MAN2011**
19.293 FAS	D 2865 LF20, D 2865 LF24	213	04/1995 → 01/2000		55	24	063534699820	**MAN2011**
19.293 FC,19.293 FLC,19.293 FLLC	D 2865 LF20, D 2865 LF24	213	04/1995 → 01/2000		55	24	063534699820	**MAN2011**
19.293 FK,19.293 FLK	D 2865 LF20, D 2865 LF24	213	04/1995 → 01/2000		55	24	063534699820	**MAN2011**
19.293 FS,19.293 FLS,19.293 FLLS	D 2865 LF20, D 2865 LF24	213	04/1995 → 01/2000		55	24	063534699820	**MAN2011**
19.314 FAC		228	05/2001 → 08/2002		55	24	063534699820	**MAN2011**
19.314 FAC		228	05/2001 → 08/2002		100	24	063535255010	**MAN2026**
19.314 FAK, FA-KI		228	05/2001 → 08/2002		55	24	063534699820	**MAN2011**
19.314 FAK, FA-KI		228	05/2001 → 08/2002		100	24	063535255010	**MAN2026**
19.314 FAS	D 2866 LF34	228	06/1998 → 12/2001		55	24	063534699820	**MAN2011**
19.314 FAS	D 2866 LF34	228	06/1998 → 12/2001		100	24	063535255010	**MAN2026**
19.314 FC, FLC, FLLC, FLLW, FRC, FLRC, FLLRC, FLL, FLLR, F-N	D 2866 LF34	228	06/1998 → 12/2001		55	24	063534699820	**MAN2011**
19.314 FC, FLC, FLLC, FLLW, FRC, FLRC, FLLRC, FLL, FLLR, F-N	D 2866 LF34	228	06/1998 → 12/2001		100	24	063535255010	**MAN2026**
19.314 FK, FLK, F-KI, FL-KI	D 2866 LF34	228	06/1998 → 12/2001		55	24	063534699820	**MAN2011**
19.314 FK, FLK, F-KI, FL-KI	D 2866 LF34	228	06/1998 → 08/2002		100	24	063535255010	**MAN2026**
19.314 FS, FLS, FLLS, FRS, FLRS, FLLRS	D 2866 LF34	228	06/1998 → 12/2001		55	24	063534699820	**MAN2011**
19.314 FS, FLS, FLLS, FRS, FLRS, FLLRS	D 2866 LF34	228	06/1998 → 12/2001		100	24	063535255010	**MAN2026**
19.323 FAC	D 2865 LF23	235	01/1994 → 12/1995		55	24	063534699820	**MAN2011**
19.323 FAK	D 2865 LF23	235	01/1994 → 12/1995		55	24	063534699820	**MAN2011**
19.323 FAS	D 2865 LF23	235	01/1994 → 12/1995		55	24	063534699820	**MAN2011**
19.323 FC,19.323 FLC,19.323 FLLC	D 2865 LF23	235	01/1994 → 12/1995		55	24	063534699820	**MAN2011**
19.323 FK,19.323 FLK	D 2865 LF23	235	01/1994 → 12/1995		55	24	063534699820	**MAN2011**
19.323 FS,19.323 FLS,19.323 FLLS	D 2865 LF23	235	01/1994 → 12/1995		55	24	063534699820	**MAN2011**
19.343 FAC	D 2865 LF21	250	01/1994 → 01/2000		55	24	063534699820	**MAN2011**
19.343 FAK	D 2865 LF21	250	01/1994 → 09/2001		55	24	063534699820	**MAN2011**

		kW ÷ kW		i	A	V	MAGNETI MARELLI LONG	MAGNETI MARELLI SHORT
MAN								
F 2000								
19.343 FAS	D 2865 LF21	250	01/1994 → 01/2000		55	24	063534699820	**MAN2011**
19.343 FC,19.343 FLC,19.343 FLLC	D 2865 LF21	250	01/1994 → 09/2001		55	24	063534699820	**MAN2011**
19.343 FK,19.343 FLK	D 2865 LF21	250	01/1994 → 09/2001		55	24	063534699820	**MAN2011**
19.343 FS,19.343 FLS,19.343 FLLS	D 2865 LF21	250	01/1994 → 09/2001		55	24	063534699820	**MAN2011**
19.364 FAC	D 2866 LF35	265	06/1998 → 12/2001		55	24	063534699820	**MAN2011**
19.364 FAC	D 2866 LF35	265	06/1998 → 12/2001		100	24	063535255010	**MAN2026**
19.364 FAK, FA-KI	D 2866 LF35	265	06/1998 → 09/2001		55	24	063534699820	**MAN2011**
19.364 FAK, FA-KI	D 2866 LF35	265	06/1998 → 09/2001		100	24	063535255010	**MAN2026**
19.364 FAS	D 2866 LF35	265	06/1998 → 09/2001		55	24	063534699820	**MAN2011**
19.364 FAS	D 2866 LF35	265	06/1998 → 12/2001		100	24	063535255010	**MAN2026**
19.364 FC, FLC, FLLC, FLLW, FRC, FLRC, FLLRC, FLL, FLLR, F-N	D 2866 LF35	265	06/1998 → 09/2001		55	24	063534699820	**MAN2011**
19.364 FC, FLC, FLLC, FLLW, FRC, FLRC, FLLRC, FLL, FLLR, F-N	D 2866 LF35	265	06/1998 → 09/2001		100	24	063535255010	**MAN2026**
19.364 FK, FLK, F-KI, FL-KI	D 2866 LF35	265	06/1998 → 12/2001		55	24	063534699820	**MAN2011**
19.364 FK, FLK, F-KI, FL-KI	D 2866 LF35	265	06/1998 → 12/2001		100	24	063535255010	**MAN2026**
19.364 FS, FLS, FLLS, FRS, FLRS, FLLRS	D 2866 LF35	265	06/1998 → 12/2001		55	24	063534699820	**MAN2011**
19.364 FS, FLS, FLLS, FRS, FLRS, FLLRS	D 2866 LF35	265	06/1998 → 12/2001		100	24	063535255010	**MAN2026**
19.373 FAC	D 2866 LF21	272	01/1994 → 12/1995		55	24	063534699820	**MAN2011**
19.373 FAC	D 2866 LF21	272	01/1994 → 12/1995		100	24	063535255010	**MAN2026**
19.373 FAK, FA-KI	D 2866 LF21	272	01/1994 → 12/1995		55	24	063534699820	**MAN2011**
19.373 FAK, FA-KI	D 2866 LF21	272	01/1994 → 12/1995		100	24	063535255010	**MAN2026**
19.373 FAS	D 2866 LF21	272	01/1994 → 12/1995		55	24	063534699820	**MAN2011**
19.373 FAS	D 2866 LF21	272	01/1994 → 12/1995		100	24	063535255010	**MAN2026**
19.373 FC, FLC, FLLC, FRC, FLRC, F-NL	D 2866 LF21	272	01/1994 → 09/2001		55	24	063534699820	**MAN2011**
19.373 FC, FLC, FLLC, FRC, FLRC, F-NL	D 2866 LF21	272	01/1994 → 12/1995		100	24	063535255010	**MAN2026**
19.373 FK, FLK, F-KI, FL-KI	D 2866 LF21	272	01/1994 → 12/1995		55	24	063534699820	**MAN2011**
19.373 FK, FLK, F-KI, FL-KI	D 2866 LF21	272	01/1994 → 12/1995		100	24	063535255010	**MAN2026**
19.373 FS, FLS, FLLS, FRS, FLRS, FLLRS	D 2866 LF21	272	01/1994 → 12/1995		55	24	063534699820	**MAN2011**
19.373 FS, FLS, FLLS, FRS, FLRS, FLLRS	D 2866 LF21	272	01/1994 → 12/1995		100	24	063535255010	**MAN2026**

		kW ÷ kW		i	A	V	LONG	SHORT
MAN								
F 2000								
19.403 FAC	D 2866 LF20	294	06/1996 → 12/2001		55	24	063534699820	**MAN2011**
19.403 FAC	D 2866 LF20	294	06/1996 → 12/2001		100	24	063535255010	**MAN2026**
19.403 FAK, FA-KI	D 2866 LF20	294	06/1996 → 09/2001		55	24	063534699820	**MAN2011**
19.403 FAK, FA-KI	D 2866 LF20	294	06/1996 → 09/2001		100	24	063535255010	**MAN2026**
19.403 FAS	D 2866 LF20	294	01/1994 → 12/2001		55	24	063534699820	**MAN2011**
19.403 FAS	D 2866 LF20	294	01/1994 → 12/2001		100	24	063535255010	**MAN2026**
19.403 FC, FLC, FLLC, FRC, FLRC, F-NL	D 2866 LF20	294	01/1994 → 09/2001		55	24	063534699820	**MAN2011**
19.403 FC, FLC, FLLC, FRC, FLRC, F-NL	D 2866 LF20	294	01/1994 → 09/2001		100	24	063535255010	**MAN2026**
19.403 FK, FLK, F-KI, FL-KI	D 2866 LF20	294	01/1994 → 12/2001		55	24	063534699820	**MAN2011**
19.403 FK, FLK, F-KI, FL-KI	D 2866 LF20	294	01/1994 → 12/2001		100	24	063535255010	**MAN2026**
19.403 FS, FLS, FLLS, FRS, FLRS, FLLRS	D 2866 LF20	294	01/1994 → 09/2001		55	24	063534699820	**MAN2011**
19.403 FS, FLS, FLLS, FRS, FLRS, FLLRS	D 2866 LF20	294	01/1994 → 12/2001		100	24	063535255010	**MAN2026**
19.414 FAC	D 2866 LF31	301	06/1998 → 12/2001		55	24	063534699820	**MAN2011**
19.414 FAC	D 2866 LF31	301	06/1998 → 12/2001		100	24	063535255010	**MAN2026**
19.414 FAK, FA-KI	D 2866 LF31	301	06/1998 → 12/2001		55	24	063534699820	**MAN2011**
19.414 FAK, FA-KI	D 2866 LF31	301	06/1998 → 12/2001		100	24	063535255010	**MAN2026**
19.414 FAS	D 2866 LF31	301	06/1998 → 12/2001		55	24	063534699820	**MAN2011**
19.414 FAS	D 2866 LF31	301	06/1998 → 12/2001		100	24	063535255010	**MAN2026**
19.414 FC, FLC, FLLC, FRC, FLRC, FLLRC, FLL, FLLR, F-NL	D 2866 LF31	301	06/1998 → 12/2001		55	24	063534699820	**MAN2011**
19.414 FC, FLC, FLLC, FRC, FLRC, FLLRC, FLL, FLLR, F-NL	D 2866 LF31	301	06/1998 → 12/2001		100	24	063535255010	**MAN2026**
19.414 FK, FLK, F-KI, FL-KI	D 2866 LF31	301	06/1998 → 12/2001		55	24	063534699820	**MAN2011**
19.414 FK, FLK, F-KI, FL-KI	D 2866 LF31	301	06/1998 → 12/2001		100	24	063535255010	**MAN2026**
19.414 FS, FLS, FLLS, FRS, FLRS, FLLRS	D 2866 LF31	301	06/1998 → 12/2001		55	24	063534699820	**MAN2011**
19.414 FS, FLS, FLLS, FRS, FLRS, FLLRS	D 2866 LF31	301	06/1998 → 12/2001		100	24	063535255010	**MAN2026**
19.423 FAC	D 2866 LF22	309	01/1994 → 12/1995		55	24	063534699820	**MAN2011**
19.423 FAC	D 2866 LF22	309	01/1994 → 12/1995		100	24	063535255010	**MAN2026**
19.423 FAK, FA-KI	D 2866 LF22	309	01/1994 → 12/1995		55	24	063534699820	**MAN2011**
19.423 FAK, FA-KI	D 2866 LF22	309	01/1994 → 12/1995		100	24	063535255010	**MAN2026**
19.423 FAS	D 2866 LF22	309	01/1994 → 12/1995		55	24	063534699820	**MAN2011**
19.423 FAS	D 2866 LF22	309	01/1994 → 12/1995		100	24	063535255010	**MAN2026**
19.423 FC, FLC, FLLC, F-NL	D 2866 LF22	309	01/1994 → 12/1995		55	24	063534699820	**MAN2011**

		kW ÷ kW		i	A	V	LONG	SHORT
MAN								
F 2000								
19.423 FC, FLC, FLLC, F-NL	D 2866 LF22	309	01/1994 → 12/1995		100	24	063535255010	**MAN2026**
19.423 FK, FLK, F-KI, FL-KI	D 2866 LF22	309	01/1994 → 12/1995		55	24	063534699820	**MAN2011**
19.423 FK, FLK, F-KI, FL-KI	D 2866 LF22	309	01/1994 → 12/1995		100	24	063535255010	**MAN2026**
19.423 FS, FLS, FLLS	D 2866 LF22	309	01/1994 → 12/1995		55	24	063534699820	**MAN2011**
19.423 FS, FLS, FLLS	D 2866 LF22	309	01/1994 → 12/1995		100	24	063535255010	**MAN2026**
19.463 FAC	D 2876 LF 02	338	01/1994 → 12/2001		55	24	063534699820	**MAN2011**
19.463 FAC	D 2876 LF 02	338	01/1994 → 12/2001		100	24	063535255010	**MAN2026**
19.463 FAK, FA-KI	D 2876 LF 02	338	01/1994 → 09/2001		55	24	063534699820	**MAN2011**
19.463 FAK, FA-KI	D 2876 LF 02	338	01/1994 → 09/2001		100	24	063535255010	**MAN2026**
19.463 FAS	D 2876 LF 02	338	01/1994 → 12/2001		55	24	063534699820	**MAN2011**
19.463 FAS	D 2876 LF 02	338	01/1994 → 12/2001		100	24	063535255010	**MAN2026**
19.463 FC, FLC, FLLC, FRC, FLRC, F-NL	D 2876 LF 02	338	01/1994 → 09/2001		55	24	063534699820	**MAN2011**
19.463 FC, FLC, FLLC, FRC, FLRC, F-NL	D 2876 LF 02	338	01/1994 → 09/2001		100	24	063535255010	**MAN2026**
19.463 FK, FLK, F-KI, FL-KI	D 2876 LF 02	338	01/1994 → 09/2001		55	24	063534699820	**MAN2011**
19.463 FK, FLK, F-KI, FL-KI	D 2876 LF 02	338	01/1994 → 12/2001		100	24	063535255010	**MAN2026**
19.463 FS, FLS, FLLS, FRS, FLRS, FLLRS	D 2876 LF 02	338	01/1994 → 09/2001		55	24	063534699820	**MAN2011**
19.463 FS, FLS, FLLS, FRS, FLRS, FLLRS	D 2876 LF 02	338	01/1994 → 09/2001		100	24	063535255010	**MAN2026**
19.464 FAC	D 2876 LF 06	338	06/1998 → 12/2002		55	24	063534699820	**MAN2011**
19.464 FAC	D 2876 LF 06	338	06/1998 → 12/2002		100	24	063535255010	**MAN2026**
19.464 FAK, FA-KI	D 2876 LF 06	338	06/1998 → 07/2001		55	24	063534699820	**MAN2011**
19.464 FAK, FA-KI	D 2876 LF 06	338	06/1998 → 07/2001		100	24	063535255010	**MAN2026**
19.464 FAS	D 2876 LF 06	338	06/1998 → 09/2001		55	24	063534699820	**MAN2011**
19.464 FAS	D 2876 LF 06	338	06/1998 → 07/2001		100	24	063535255010	**MAN2026**
19.464 FC, FLC, FLLC, FLL, FRC, FLLR, FLLRC, FLLW, F-NL	D 2876 LF 06	338	06/1998 → 07/2001		55	24	063534699820	**MAN2011**
19.464 FC, FLC, FLLC, FLL, FRC, FLLR, FLLRC, FLLW, F-NL	D 2876 LF 06	338	06/1998 → 07/2001		100	24	063535255010	**MAN2026**
19.464 FK, FLK, F-KI, FL-KI	D 2876 LF 06	338	06/1998 → 09/2001		55	24	063534699820	**MAN2011**
19.464 FK, FLK, F-KI, FL-KI	D 2876 LF 06	338	06/1998 → 07/2001		100	24	063535255010	**MAN2026**
19.464 FS, FLS, FLLS, FRS, FLRS, FLLRS	D 2876 LF 06	338	06/1998 → 07/2001		55	24	063534699820	**MAN2011**

		kW ÷ kW		i	A	V	MAGNETI MARELLI LONG	MAGNETI MARELLI SHORT
MAN								
F 2000								
19.464 FS, FLS, FLLS, FRS, FLRS, FLLRS	D 2876 LF 06	338	06/1998 → 07/2001		100	24	063535255010	**MAN2026**
23.293 FNLLC	D 2865 LF20, D 2865 LF24	213	04/1995 → 01/2000		55	24	063534699820	**MAN2011**
23.314 FNLLC		228	05/2001 → 12/2002		55	24	063534699820	**MAN2011**
23.314 FNLLC		228	05/2001 → 12/2002		100	24	063535255010	**MAN2026**
23.343 FNLLC	D 2865 LF21	250	01/1994 → 01/2000		55	24	063534699820	**MAN2011**
23.364 FNLLC		265	05/2001 → 12/2002		55	24	063534699820	**MAN2011**
23.364 FNLLC		265	05/2001 → 12/2002		100	24	063535255010	**MAN2026**
23.403 FNLLC	D 2866 LF20	294	01/1994 → 09/2001		55	24	063534699820	**MAN2011**
23.403 FNLLC	D 2866 LF20	294	01/1994 → 09/2001		100	24	063535255010	**MAN2026**
23.463 FNLLC	D 2876 LF 02	338	01/1994 → 09/2001		55	24	063534699820	**MAN2011**
23.463 FNLLC	D 2876 LF 02	338	01/1994 → 09/2001		100	24	063535255010	**MAN2026**
24.273 FNLLC	D 2865 LF22	198	01/1994 → 12/1995		55	24	063534699820	**MAN2011**
24.293 FNLLC	D 2865 LF24	213	01/1994 → 01/2000		55	24	063534699820	**MAN2011**
24.314 FNLLRC		228	05/2001 → 08/2002		55	24	063534699820	**MAN2011**
24.314 FNLLRC		228	05/2001 → 08/2002		100	24	063535255010	**MAN2026**
24.323 FNLLC	D 2865 LF23	235	01/1994 → 12/1995		55	24	063534699820	**MAN2011**
24.343 FNLLC	D 2865 LF21	250	01/1994 → 01/2000		55	24	063534699820	**MAN2011**
24.364 FNLLRC		265	05/2001 → 09/2001		55	24	063534699820	**MAN2011**
24.364 FNLLRC		265	05/2001 → 09/2001		100	24	063535255010	**MAN2026**
24.373 FNLLC	D 2866 LF21	272	01/1994 → 12/1995		55	24	063534699820	**MAN2011**
24.373 FNLLC	D 2866 LF21	272	01/1994 → 12/1995		100	24	063535255010	**MAN2026**
24.403 FNLLC	D 2866 LF20	294	01/1994 → 09/2001		55	24	063534699820	**MAN2011**
24.403 FNLLC	D 2866 LF20	294	01/1994 → 09/2001		100	24	063535255010	**MAN2026**
24.414 FNLLRC		301	05/2001 → 12/2001		55	24	063534699820	**MAN2011**
24.414 FNLLRC		301	05/2001 → 12/2001		100	24	063535255010	**MAN2026**
24.423 FNLLC	D 2866 LF22	309	01/1994 → 12/1995		55	24	063534699820	**MAN2011**
24.423 FNLLC	D 2866 LF22	309	01/1994 → 12/1995		100	24	063535255010	**MAN2026**
24.463 FNLLC	D 2876 LF 02	338	01/1994 → 09/2001		55	24	063534699820	**MAN2011**
24.463 FNLLC	D 2876 LF 02	338	01/1994 → 09/2001		100	24	063535255010	**MAN2026**
24.464 FNLLRC		338	05/2001 → 09/2001		55	24	063534699820	**MAN2011**
24.464 FNLLRC		338	05/2001 → 09/2001		100	24	063535255010	**MAN2026**
26.233 FVLCNG	E 2866 DF 01	170	09/1996 → 08/2002		55	24	063534699820	**MAN2011**
26.233 FVL-KO		170	03/2000 → 08/2002		55	24	063534699820	**MAN2011**
26.273 DFC, 26.273 DFLC	D 2865 LF22	198	01/1994 → 12/1995		55	24	063534699820	**MAN2011**
26.273 DFK, 26.273 DFLK	D 2865 LF22	198	01/1994 → 12/1995		55	24	063534699820	**MAN2011**
26.273 DFS, 26.273 DFLS	D 2865 LF22	198	01/1994 → 12/1995		55	24	063534699820	**MAN2011**
26.273 FNLC, 26.273 FNLLC, 26.273 FVLC	D 2865 LF22	198	01/1994 → 12/1995		55	24	063534699820	**MAN2011**
26.273 FNLS, 26.273 FVLS	D 2865 LF22	198	01/1994 → 12/1995		55	24	063534699820	**MAN2011**

		kW ÷ kW		i	A	V	LONG	SHORT
MAN								
F 2000								
26.293 DFC, 26.293 DFLC	D 2865 LF20, D 2865 LF24	213	04/1995 → 01/2000		55	24	063534699820	**MAN2011**
26.293 DFK, 26.293 DFLK	D 2865 LF20, D 2865 LF24	213	04/1995 → 01/2000		55	24	063534699820	**MAN2011**
26.293 DFS, 26.293 DFLS	D 2865 LF20, D 2865 LF24	213	04/1995 → 01/2000		55	24	063534699820	**MAN2011**
26.293 FNLC, 26.293 FNLLC, 26.293 FVLC	D 2865 LF20, D 2865 LF24	213	04/1995 → 09/2001		55	24	063534699820	**MAN2011**
26.293 FNLS, 26.293 FVLS	D 2865 LF20, D 2865 LF24	213	04/1995 → 09/2001		55	24	063534699820	**MAN2011**
26.314 DFC, DFLC		228	05/2001 → 06/2003		55	24	063534699820	**MAN2011**
26.314 DFC, DFLC		228	05/2001 → 06/2003		100	24	063535255010	**MAN2026**
26.314 DFK, DFLK	D 2866 LF23	228	05/2001 → 06/2003		55	24	063534699820	**MAN2011**
26.314 DFK, DFLK	D 2866 LF23	228	05/2001 → 06/2003		100	24	063535255010	**MAN2026**
26.314 DFS, DFLS	D 2866 LF23	228	05/2001 → 06/2003		55	24	063534699820	**MAN2011**
26.314 DFS, DFLS	D 2866 LF23	228	05/2001 → 06/2003		100	24	063535255010	**MAN2026**
26.314 DF-TM	D 2866 LF23	228	05/2001 → 06/2003		55	24	063534699820	**MAN2011**
26.314 DF-TM	D 2866 LF23	228	05/2001 → 06/2003		100	24	063535255010	**MAN2026**
26.314 FNLC, FNLLC, FNLLRC, FNLLW, FVLC	D 2866 LF23	228	05/2001 → 06/2003		55	24	063534699820	**MAN2011**
26.314 FNLC, FNLLC, FNLLRC, FNLLW, FVLC	D 2866 LF23	228	05/2001 → 06/2003		100	24	063535255010	**MAN2026**
26.314 FNLS	D 2866 LF23	228	05/2001 → 06/2003		55	24	063534699820	**MAN2011**
26.314 FNLS	D 2866 LF23	228	05/2001 → 06/2003		100	24	063535255010	**MAN2026**
26.314 FVL-KO	D 2866 LF23	228	05/2001 → 06/2003		55	24	063534699820	**MAN2011**
26.314 FVL-KO	D 2866 LF23	228	05/2001 → 06/2003		100	24	063535255010	**MAN2026**
26.314 FVLS, FVLRS	D 2866 LF23	228	05/2001 → 06/2003		55	24	063534699820	**MAN2011**
26.314 FVLS, FVLRS	D 2866 LF23	228	05/2001 → 06/2003		100	24	063535255010	**MAN2026**
26.323 DFC,26.323 DFLC	D 2865 LF23	235	01/1994 → 12/1995		55	24	063534699820	**MAN2011**
26.323 DFK,26.323 DFLK	D 2865 LF23	235	01/1994 → 12/1995		55	24	063534699820	**MAN2011**
26.323 DFS,26.323 DFLS	D 2865 LF23	235	01/1994 → 12/1995		55	24	063534699820	**MAN2011**
26.323 FNLC,26.323 FNLLC,26.323 FVLC	D 2865 LF23	235	01/1994 → 12/1995		55	24	063534699820	**MAN2011**
26.323 FNLS,26.323 FVLS	D 2865 LF23	235	01/1994 → 12/1995		55	24	063534699820	**MAN2011**
26.343 DFC,26.343 DFLC	D 2865 LF21	250	01/1994 → 01/2000		55	24	063534699820	**MAN2011**
26.343 DFK, 26.343 DFLK	D 2865 LF21	250	01/1994 → 01/2000		55	24	063534699820	**MAN2011**
26.343 DFS, 26.343 DFLS	D 2865 LF21	250	01/1994 → 01/2000		55	24	063534699820	**MAN2011**
26.343 FNLC, 26.343 FNLLC, 26.343 FVLC	D 2865 LF21	250	01/1994 → 01/2000		55	24	063534699820	**MAN2011**

		kW ÷ kW		i	A	V	LONG	SHORT
MAN								
F 2000								
26.343 FNLS, 26.343 FVLS	D 2865 LF21	250	01/1994 → 01/2000		55	24	063534699820	**MAN2011**
26.364 DFC, DFLC	D 2866 LF24	265	05/2001 → 06/2003		55	24	063534699820	**MAN2011**
26.364 DFC, DFLC	D 2866 LF24	265	05/2001 → 06/2003		100	24	063535255010	**MAN2026**
26.364 DFK, DFLK	D 2866 LF24	265	05/2001 → 06/2003		55	24	063534699820	**MAN2011**
26.364 DFK, DFLK	D 2866 LF24	265	05/2001 → 06/2003		100	24	063535255010	**MAN2026**
26.364 DFS, DFLS	D 2866 LF24	265	05/2001 → 06/2003		55	24	063534699820	**MAN2011**
26.364 DFS, DFLS	D 2866 LF24	265	05/2001 → 06/2003		100	24	063535255010	**MAN2026**
26.364 DF-TM	D 2866 LF24	265	05/2001 → 06/2003		55	24	063534699820	**MAN2011**
26.364 DF-TM	D 2866 LF24	265	05/2001 → 06/2003		100	24	063535255010	**MAN2026**
26.364 FNLC, FNLLC, FNLLRC, FNLLW, FVLC	D 2866 LF24	265	05/2001 → 06/2003		55	24	063534699820	**MAN2011**
26.364 FNLC, FNLLC, FNLLRC, FNLLW, FVLC	D 2866 LF24	265	05/2001 → 06/2003		100	24	063535255010	**MAN2026**
26.364 FNLS	D 2866 LF24	265	05/2001 → 06/2003		55	24	063534699820	**MAN2011**
26.364 FNLS	D 2866 LF24	265	05/2001 → 06/2003		100	24	063535255010	**MAN2026**
26.364 FVL-KO	D 2866 LF24	265	05/2001 → 06/2003		55	24	063534699820	**MAN2011**
26.364 FVL-KO	D 2866 LF24	265	05/2001 → 06/2003		100	24	063535255010	**MAN2026**
26.364 FVLS, FVLRS	D 2866 LF24	265	05/2001 → 06/2003		55	24	063534699820	**MAN2011**
26.364 FVLS, FVLRS	D 2866 LF24	265	05/2001 → 06/2003		100	24	063535255010	**MAN2026**
26.373 DFC, 26.373 DFLC	D 2866 LF21	272	01/1994 → 12/1995		55	24	063534699820	**MAN2011**
26.373 DFC, 26.373 DFLC	D 2866 LF21	272	01/1994 → 12/1995		100	24	063535255010	**MAN2026**
26.373 DFK, 26.373 DFLK	D 2866 LF21	272	01/1994 → 12/1995		55	24	063534699820	**MAN2011**
26.373 DFK, 26.373 DFLK	D 2866 LF21	272	01/1994 → 12/1995		100	24	063535255010	**MAN2026**
26.373 DFS, 26.373 DFLS	D 2866 LF21	272	01/1994 → 12/1995		55	24	063534699820	**MAN2011**
26.373 DFS, 26.373 DFLS	D 2866 LF21	272	01/1994 → 12/1995		100	24	063535255010	**MAN2026**
26.373 FNLC, 26.373 FNLLC, 26.373 FVLC	D 2866 LF21	272	01/1994 → 12/1995		55	24	063534699820	**MAN2011**
26.373 FNLC, 26.373 FNLLC, 26.373 FVLC	D 2866 LF21	272	01/1994 → 12/1995		100	24	063535255010	**MAN2026**
26.373 FNLS, 26.373 FVLS	D 2866 LF21	272	01/1994 → 12/1995		55	24	063534699820	**MAN2011**
26.373 FNLS, 26.373 FVLS	D 2866 LF21	272	01/1994 → 12/1995		100	24	063535255010	**MAN2026**
26.403 DFC, 26.403 DFLC	D 2866 LF20	294	01/1994 → 08/2001		55	24	063534699820	**MAN2011**
26.403 DFC, 26.403 DFLC	D 2866 LF20	294	01/1994 → 08/2001		100	24	063535255010	**MAN2026**
26.403 DFK, 26.403 DFLK	D 2866 LF20	294	01/1994 → 08/2001		55	24	063534699820	**MAN2011**
26.403 DFK, 26.403 DFLK	D 2866 LF20	294	01/1994 → 08/2001		100	24	063535255010	**MAN2026**
26.403 DFS, 26.403 DFLS	D 2866 LF20	294	01/1994 → 08/2001		55	24	063534699820	**MAN2011**
26.403 DFS, 26.403 DFLS	D 2866 LF20	294	01/1994 → 08/2001		100	24	063535255010	**MAN2026**
26.403 FNLC, 26.403 FNLLC, 26.403 FVLC	D 2866 LF20	294	01/1994 → 08/2001		55	24	063534699820	**MAN2011**
26.403 FNLC, 26.403 FNLLC, 26.403 FVLC	D 2866 LF20	294	01/1994 → 09/2001		100	24	063535255010	**MAN2026**

		kW ÷ kW			A	V	LONG	SHORT
MAN								
F 2000								
26.403 FNLS, 26.403 FVLS	D 2866 LF20	294	01/1994 → 08/2001		55	24	063534699820	**MAN2011**
26.403 FNLS, 26.403 FVLS	D 2866 LF20	294	01/1994 → 09/2001		100	24	063535255010	**MAN2026**
26.414 DFC, DFLC	D 2866 LF25	301	05/2001 → 09/2002		55	24	063534699820	**MAN2011**
26.414 DFC, DFLC	D 2866 LF25	301	05/2001 → 09/2002		100	24	063535255010	**MAN2026**
26.414 DFK, DFLK	D 2866 LF25	301	05/2001 → 09/2002		55	24	063534699820	**MAN2011**
26.414 DFK, DFLK	D 2866 LF25	301	05/2001 → 09/2002		100	24	063535255010	**MAN2026**
26.414 DFS, DFLS	D 2866 LF25	301	05/2001 → 09/2002		55	24	063534699820	**MAN2011**
26.414 DFS, DFLS	D 2866 LF25	301	05/2001 → 09/2002		100	24	063535255010	**MAN2026**
26.414 DF-TM	D 2866 LF25	301	05/2001 → 09/2002		55	24	063534699820	**MAN2011**
26.414 DF-TM	D 2866 LF25	301	05/2001 → 09/2002		100	24	063535255010	**MAN2026**
26.414 FNLC, FNLLC, FNLLRC, FNLLW, FVLC	D 2866 LF25	301	05/2001 → 09/2002		55	24	063534699820	**MAN2011**
26.414 FNLC, FNLLC, FNLLRC, FNLLW, FVLC	D 2866 LF25	301	05/2001 → 09/2002		100	24	063535255010	**MAN2026**
26.414 FNLS	D 2866 LF25	301	05/2001 → 09/2002		55	24	063534699820	**MAN2011**
26.414 FNLS	D 2866 LF25	301	05/2001 → 09/2002		100	24	063535255010	**MAN2026**
26.414 FVL-KO	D 2866 LF25	301	05/2001 → 09/2002		55	24	063534699820	**MAN2011**
26.414 FVL-KO	D 2866 LF25	301	05/2001 → 09/2002		100	24	063535255010	**MAN2026**
26.414 FVLS, FVLRS	D 2866 LF25	301	05/2001 → 09/2002		55	24	063534699820	**MAN2011**
26.414 FVLS, FVLRS	D 2866 LF25	301	05/2001 → 09/2002		100	24	063535255010	**MAN2026**
26.423 DFC, 26.423 DFLC	D 2866 LF22	309	01/1994 → 12/1995		55	24	063534699820	**MAN2011**
26.423 DFC, 26.423 DFLC	D 2866 LF22	309	01/1994 → 12/1995		100	24	063535255010	**MAN2026**
26.423 DFK, 26.423 DFLK	D 2866 LF22	309	01/1994 → 12/1995		55	24	063534699820	**MAN2011**
26.423 DFK, 26.423 DFLK	D 2866 LF22	309	01/1994 → 12/1995		100	24	063535255010	**MAN2026**
26.423 DFS, 26.423 DFLS	D 2866 LF22	309	01/1994 → 12/1995		55	24	063534699820	**MAN2011**
26.423 DFS, 26.423 DFLS	D 2866 LF22	309	01/1994 → 12/1995		100	24	063535255010	**MAN2026**
26.423 FNLC, 26.423 FNLLC, 26.423 FVLC	D 2866 LF22	309	01/1994 → 12/1995		55	24	063534699820	**MAN2011**
26.423 FNLC, 26.423 FNLLC, 26.423 FVLC	D 2866 LF22	309	01/1994 → 12/1995		100	24	063535255010	**MAN2026**
26.423 FNLS, 26.423 FVLS	D 2866 LF22	309	01/1994 → 12/1995		55	24	063534699820	**MAN2011**
26.423 FNLS, 26.423 FVLS	D 2866 LF22	309	01/1994 → 12/1995		100	24	063535255010	**MAN2026**
26.463 DFC, DFLC	D 2876 LF 02	338	01/1994 → 08/2001		55	24	063534699820	**MAN2011**
26.463 DFC, DFLC	D 2876 LF 02	338	01/1994 → 08/2001		100	24	063535255010	**MAN2026**

		kW ÷ kW		i	A	V	MAGNETI MARELLI LONG	MAGNETI MARELLI SHORT
MAN								
F 2000								
26.463 DFK, 26.463 DFLK	D 2876 LF 02	338	01/1994 → 08/2001		55	24	063534699820	**MAN2011**
26.463 DFK, 26.463 DFLK	D 2876 LF 02	338	01/1994 → 08/2001		100	24	063535255010	**MAN2026**
26.463 DFS, 26.463 DFLS	D 2876 LF 02	338	01/1994 → 08/2001		55	24	063534699820	**MAN2011**
26.463 DFS, 26.463 DFLS	D 2876 LF 02	338	01/1994 → 08/2001		100	24	063535255010	**MAN2026**
26.463 FNLC, FNLLC, FVLC	D 2876 LF 02	338	01/1994 → 09/2001		55	24	063534699820	**MAN2011**
26.463 FNLC, FNLLC, FVLC	D 2876 LF 02	338	01/1994 → 08/2001		100	24	063535255010	**MAN2026**
26.463 FNLS, 26.463 FVLS	D 2876 LF 02	338	01/1994 → 09/2001		55	24	063534699820	**MAN2011**
26.463 FNLS, 26.463 FVLS	D 2876 LF 02	338	01/1994 → 09/2001		100	24	063535255010	**MAN2026**
26.464 DFC, DFLC	D 2876 LF 03	338	05/2001 → 09/2002		55	24	063534699820	**MAN2011**
26.464 DFC, DFLC	D 2876 LF 03	338	05/2001 → 09/2002		100	24	063535255010	**MAN2026**
26.464 DFK, DFLK	D 2876 LF 03	338	05/2001 → 09/2002		55	24	063534699820	**MAN2011**
26.464 DFK, DFLK	D 2876 LF 03	338	05/2001 → 09/2002		100	24	063535255010	**MAN2026**
26.464 DFS, DFLS	D 2876 LF 03	338	05/2001 → 09/2002		55	24	063534699820	**MAN2011**
26.464 DFS, DFLS	D 2876 LF 03	338	05/2001 → 09/2002		100	24	063535255010	**MAN2026**
26.464 DF-TM	D 2876 LF 03	338	05/2001 → 09/2002		55	24	063534699820	**MAN2011**
26.464 DF-TM	D 2876 LF 03	338	05/2001 → 09/2002		100	24	063535255010	**MAN2026**
26.464 FNLS	D 2876 LF 03	338	05/2001 → 09/2002		55	24	063534699820	**MAN2011**
26.464 FNLS	D 2876 LF 03	338	05/2001 → 09/2002		100	24	063535255010	**MAN2026**
26.464 FVL-KO	D 2876 LF 03	338	05/2001 → 09/2002		55	24	063534699820	**MAN2011**
26.464 FVL-KO	D 2876 LF 03	338	05/2001 → 09/2002		100	24	063535255010	**MAN2026**
26.464 FVLS, FVLRS	D 2876 LF 03	338	05/2001 → 09/2002		55	24	063534699820	**MAN2011**
26.464 FVLS, FVLRS	D 2876 LF 03	338	05/2001 → 09/2002		100	24	063535255010	**MAN2026**
27.273 DFAC	D 2865 LF22	198	01/1994 → 12/1995		55	24	063534699820	**MAN2011**
27.273 DFAK	D 2865 LF22	198	01/1994 → 12/1995		55	24	063534699820	**MAN2011**
27.273 DFAS	D 2865 LF22	198	01/1994 → 12/1995		55	24	063534699820	**MAN2011**
27.273 DFC	D 2865 LF22	198	01/1994 → 12/1995		55	24	063534699820	**MAN2011**
27.273 DFK	D 2865 LF22	198	01/1994 → 12/1995		55	24	063534699820	**MAN2011**
27.273 DFS	D 2865 LF22	198	01/1994 → 12/1995		55	24	063534699820	**MAN2011**
27.293 DFAC	D 2865 LF20, D 2865 LF24	213	04/1995 → 01/2000		55	24	063534699820	**MAN2011**
27.293 DFAK	D 2865 LF20, D 2865 LF24	213	04/1995 → 01/2000		55	24	063534699820	**MAN2011**
27.293 DFAS	D 2865 LF20, D 2865 LF24	213	04/1995 → 01/2000		55	24	063534699820	**MAN2011**
27.293 DFC	D 2865 LF20, D 2865 LF24	213	04/1995 → 01/2000		55	24	063534699820	**MAN2011**

		kW ÷ kW		i	A	V	LONG	SHORT
MAN								
F 2000								
27.293 DFK	D 2865 LF20, D 2865 LF24	213	04/1995 → 01/2000		55	24	063534699820	**MAN2011**
27.293 DFS	D 2865 LF20, D 2865 LF24	213	04/1995 → 01/2000		55	24	063534699820	**MAN2011**
27.314 DFAC	D 2866 LF23	228	05/2001 → 08/2002		55	24	063534699820	**MAN2011**
27.314 DFAC	D 2866 LF23	228	05/2001 → 08/2002		100	24	063535255010	**MAN2026**
27.314 DFAK, DFA-KI		228	05/2001 → 08/2002		55	24	063534699820	**MAN2011**
27.314 DFAK, DFA-KI		228	05/2001 → 08/2002		100	24	063535255010	**MAN2026**
27.314 DFAS		228	05/2001 → 08/2002		55	24	063534699820	**MAN2011**
27.314 DFAS		228	05/2001 → 08/2002		100	24	063535255010	**MAN2026**
27.314 DFC		228	05/2001 → 08/2002		55	24	063534699820	**MAN2011**
27.314 DFC		228	05/2001 → 08/2002		100	24	063535255010	**MAN2026**
27.314 DFK, DF-KI		228	05/2001 → 08/2002		55	24	063534699820	**MAN2011**
27.314 DFK, DF-KI		228	05/2001 → 08/2002		100	24	063535255010	**MAN2026**
27.314 DFS		228	05/2001 → 08/2002		55	24	063534699820	**MAN2011**
27.314 DFS		228	05/2001 → 08/2002		100	24	063535255010	**MAN2026**
27.314 DF-TM		228	05/2001 → 08/2002		55	24	063534699820	**MAN2011**
27.314 DF-TM		228	05/2001 → 08/2002		100	24	063535255010	**MAN2026**
27.314 FVL	D 2866 LF23	228	01/2000 → 08/2002		55	24	063534699820	**MAN2011**
27.314 FVL	D 2866 LF23	228	01/2000 → 08/2002		100	24	063535255010	**MAN2026**
27.323 DFAC	D 2865 LF23	235	01/1994 → 12/1995		55	24	063534699820	**MAN2011**
27.323 DFAK, DFA-KI	D 2865 LF23	235	01/1994 → 12/1995		55	24	063534699820	**MAN2011**
27.323 DFAS	D 2865 LF23	235	01/1994 → 12/1995		55	24	063534699820	**MAN2011**
27.323 DFC	D 2865 LF23	235	01/1994 → 12/1995		55	24	063534699820	**MAN2011**
27.323 DFK, DF-KI	D 2865 LF23	235	01/1994 → 12/1995		55	24	063534699820	**MAN2011**
27.323 DFS	D 2865 LF23	235	01/1994 → 12/1995		55	24	063534699820	**MAN2011**
27.343 DFAC	D 2865 LF21	250	01/1994 → 01/2000		55	24	063534699820	**MAN2011**
27.343 DFAK	D 2865 LF21	250	01/1994 → 01/2000		55	24	063534699820	**MAN2011**
27.343 DFAS	D 2865 LF21	250	01/1994 → 01/2000		55	24	063534699820	**MAN2011**
27.343 DFC	D 2865 LF21	250	01/1994 → 01/2000		55	24	063534699820	**MAN2011**
27.343 DFK	D 2865 LF21	250	01/1994 → 01/2000		55	24	063534699820	**MAN2011**
27.343 DFS	D 2865 LF21	250	01/1994 → 01/2000		55	24	063534699820	**MAN2011**
27.364 DFAC	D 2866 LF24	265	05/2001 → 09/2002		55	24	063534699820	**MAN2011**
27.364 DFAC	D 2866 LF24	265	05/2001 → 09/2002		100	24	063535255010	**MAN2026**
27.364 DFAK, DFA-KI		265	05/2001 → 09/2002		55	24	063534699820	**MAN2011**
27.364 DFAK, DFA-KI		265	05/2001 → 09/2002		100	24	063535255010	**MAN2026**
27.364 DFAS		265	05/2001 → 09/2002		55	24	063534699820	**MAN2011**
27.364 DFAS		265	05/2001 → 09/2002		100	24	063535255010	**MAN2026**
27.364 DFC		265	05/2001 → 09/2002		55	24	063534699820	**MAN2011**
27.364 DFC		265	05/2001 → 09/2002		100	24	063535255010	**MAN2026**
27.364 DFK, DF-KI		265	05/2001 → 09/2002		55	24	063534699820	**MAN2011**
27.364 DFK, DF-KI		265	05/2001 → 09/2002		100	24	063535255010	**MAN2026**
27.364 DFS		265	05/2001 → 09/2002		55	24	063534699820	**MAN2011**
27.364 DFS		265	05/2001 → 09/2002		100	24	063535255010	**MAN2026**

		kW ÷ kW		i	A	V	LONG	SHORT
MAN								
F 2000								
27.364 DF-TM		265	05/2001 → 09/2002		55	24	063534699820	**MAN2011**
27.364 DF-TM		265	05/2001 → 09/2002		100	24	063535255010	**MAN2026**
27.364 FVL	D 2866 LF24	265	07/1999 → 09/2002		55	24	063534699820	**MAN2011**
27.364 FVL	D 2866 LF24	265	07/1999 → 09/2002		100	24	063535255010	**MAN2026**
27.373 DFAC	D 2866 LF21	272	01/1994 → 12/1995		55	24	063534699820	**MAN2011**
27.373 DFAC	D 2866 LF21	272	01/1994 → 12/1995		100	24	063535255010	**MAN2026**
27.373 DFAK, DFA-KI	D 2866 LF21	272	01/1994 → 12/1995		55	24	063534699820	**MAN2011**
27.373 DFAK, DFA-KI	D 2866 LF21	272	01/1994 → 12/1995		100	24	063535255010	**MAN2026**
27.373 DFAS	D 2866 LF21	272	01/1994 → 12/1995		55	24	063534699820	**MAN2011**
27.373 DFAS	D 2866 LF21	272	01/1994 → 12/1995		100	24	063535255010	**MAN2026**
27.373 DFC	D 2866 LF21	272	01/1994 → 12/1995		55	24	063534699820	**MAN2011**
27.373 DFC	D 2866 LF21	272	01/1994 → 12/1995		100	24	063535255010	**MAN2026**
27.373 DFK, DF-KI	D 2866 LF21	272	01/1994 → 12/1995		55	24	063534699820	**MAN2011**
27.373 DFK, DF-KI	D 2866 LF21	272	01/1994 → 12/1995		100	24	063535255010	**MAN2026**
27.373 DFS	D 2866 LF21	272	01/1994 → 12/1995		55	24	063534699820	**MAN2011**
27.373 DFS	D 2866 LF21	272	01/1994 → 12/1995		100	24	063535255010	**MAN2026**
27.403 DFAC	D 2866 LF20	294	01/1994 → 09/2001		55	24	063534699820	**MAN2011**
27.403 DFAC	D 2866 LF20	294	01/1994 → 09/2001		100	24	063535255010	**MAN2026**
27.403 DFAK, DFA-KI	D 2866 LF20	294	01/1994 → 09/2001		55	24	063534699820	**MAN2011**
27.403 DFAK, DFA-KI	D 2866 LF20	294	01/1994 → 09/2001		100	24	063535255010	**MAN2026**
27.403 DFAS	D 2866 LF20	294	01/1994 → 09/2001		55	24	063534699820	**MAN2011**
27.403 DFAS	D 2866 LF20	294	01/1994 → 09/2001		100	24	063535255010	**MAN2026**
27.403 DFC	D 2866 LF20	294	01/1994 → 09/2001		55	24	063534699820	**MAN2011**
27.403 DFC	D 2866 LF20	294	01/1994 → 09/2001		100	24	063535255010	**MAN2026**
27.403 DFK, DF-KI	D 2866 LF20	294	01/1994 → 09/2001		55	24	063534699820	**MAN2011**
27.403 DFK, DF-KI	D 2866 LF20	294	01/1994 → 09/2001		100	24	063535255010	**MAN2026**
27.403 DFS	D 2866 LF20	294	01/1994 → 09/2001		55	24	063534699820	**MAN2011**
27.403 DFS	D 2866 LF20	294	01/1994 → 09/2001		100	24	063535255010	**MAN2026**
27.414 DFAC	D 2866 LF25	301	05/2001 → 08/2002		55	24	063534699820	**MAN2011**
27.414 DFAC	D 2866 LF25	301	05/2001 → 08/2002		100	24	063535255010	**MAN2026**
27.414 DFAK, DFA-KI		301	05/2001 → 08/2002		55	24	063534699820	**MAN2011**
27.414 DFAK, DFA-KI		301	05/2001 → 08/2002		100	24	063535255010	**MAN2026**
27.414 DFAS		301	05/2001 → 08/2002		55	24	063534699820	**MAN2011**
27.414 DFAS		301	05/2001 → 08/2002		100	24	063535255010	**MAN2026**
27.414 DFC		301	05/2001 → 08/2002		55	24	063534699820	**MAN2011**
27.414 DFC		301	05/2001 → 08/2002		100	24	063535255010	**MAN2026**
27.414 DFK, DF-KI		301	05/2001 → 08/2002		55	24	063534699820	**MAN2011**
27.414 DFK, DF-KI		301	05/2001 → 08/2002		100	24	063535255010	**MAN2026**
27.414 DFS		301	05/2001 → 08/2002		55	24	063534699820	**MAN2011**
27.414 DFS		301	05/2001 → 08/2002		100	24	063535255010	**MAN2026**
27.414 DF-TM		301	05/2001 → 08/2002		55	24	063534699820	**MAN2011**
27.414 DF-TM		301	05/2001 → 08/2002		100	24	063535255010	**MAN2026**
27.414 FVL	D 2866 LF25	301	01/2000 → 08/2002		55	24	063534699820	**MAN2011**
27.414 FVL	D 2866 LF25	301	01/2000 → 08/2002		100	24	063535255010	**MAN2026**

		kW ÷ kW		i	A	V	LONG	SHORT
MAN								
F 2000								
27.423 DFAC	D 2866 LF22	309	01/1994 → 12/1995		55	24	063534699820	**MAN2011**
27.423 DFAC	D 2866 LF22	309	01/1994 → 12/1995		100	24	063535255010	**MAN2026**
27.423 DFAK, DFA-KI	D 2866 LF22	309	01/1994 → 12/1995		55	24	063534699820	**MAN2011**
27.423 DFAK, DFA-KI	D 2866 LF22	309	01/1994 → 12/1995		100	24	063535255010	**MAN2026**
27.423 DFAS	D 2866 LF22	309	01/1994 → 12/1995		55	24	063534699820	**MAN2011**
27.423 DFAS	D 2866 LF22	309	01/1994 → 12/1995		100	24	063535255010	**MAN2026**
27.423 DFC	D 2866 LF22	309	01/1994 → 12/1995		55	24	063534699820	**MAN2011**
27.423 DFC	D 2866 LF22	309	01/1994 → 12/1995		100	24	063535255010	**MAN2026**
27.423 DFK, DF-KI	D 2866 LF22	309	01/1994 → 12/1995		55	24	063534699820	**MAN2011**
27.423 DFK, DF-KI	D 2866 LF22	309	01/1994 → 12/1995		100	24	063535255010	**MAN2026**
27.423 DFS	D 2866 LF22	309	01/1994 → 12/1995		55	24	063534699820	**MAN2011**
27.423 DFS	D 2866 LF22	309	01/1994 → 12/1995		100	24	063535255010	**MAN2026**
27.463 DFAC	D 2876 LF 02	338	01/1994 → 09/2001		55	24	063534699820	**MAN2011**
27.463 DFAC	D 2876 LF 02	338	01/1994 → 09/2001		100	24	063535255010	**MAN2026**
27.463 DFAK, DFA-KI	D 2876 LF 02	338	01/1994 → 09/2001		55	24	063534699820	**MAN2011**
27.463 DFAK, DFA-KI	D 2876 LF 02	338	01/1994 → 09/2001		100	24	063535255010	**MAN2026**
27.463 DFAS	D 2876 LF 02	338	01/1994 → 09/2001		55	24	063534699820	**MAN2011**
27.463 DFAS	D 2876 LF 02	338	01/1994 → 09/2001		100	24	063535255010	**MAN2026**
27.463 DFC	D 2876 LF 02	338	01/1994 → 09/2001		55	24	063534699820	**MAN2011**
27.463 DFC	D 2876 LF 02	338	01/1994 → 09/2001		100	24	063535255010	**MAN2026**
27.463 DFK, DF-KI	D 2876 LF 02	338	01/1994 → 09/2001		55	24	063534699820	**MAN2011**
27.463 DFK, DF-KI	D 2876 LF 02	338	01/1994 → 09/2001		100	24	063535255010	**MAN2026**
27.463 DFS	D 2876 LF 02	338	01/1994 → 09/2001		55	24	063534699820	**MAN2011**
27.463 DFS	D 2876 LF 02	338	01/1994 → 09/2001		100	24	063535255010	**MAN2026**
27.463 DF-TM		338	07/2000 → 08/2002		55	24	063534699820	**MAN2011**
27.463 DF-TM		338	07/2000 → 08/2002		100	24	063535255010	**MAN2026**
27.464 DFAC	D 2876 LF 03	338	05/2001 → 08/2002		55	24	063534699820	**MAN2011**
27.464 DFAC	D 2876 LF 03	338	05/2001 → 08/2002		100	24	063535255010	**MAN2026**
27.464 DFAK, DFA-KI		338	05/2001 → 08/2002		55	24	063534699820	**MAN2011**
27.464 DFAK, DFA-KI		338	05/2001 → 08/2002		100	24	063535255010	**MAN2026**
27.464 DFAS		338	05/2001 → 08/2002		55	24	063534699820	**MAN2011**
27.464 DFAS		338	05/2001 → 08/2002		100	24	063535255010	**MAN2026**
27.464 DFK, DF-KI		338	05/2001 → 08/2002		55	24	063534699820	**MAN2011**
27.464 DFK, DF-KI		338	05/2001 → 08/2002		100	24	063535255010	**MAN2026**
27.464 DFS	D 2876 LF 06	338	01/1994 → 09/2001		55	24	063534699820	**MAN2011**
27.464 DFS	D 2876 LF 06	338	01/1994 → 09/2001		100	24	063535255010	**MAN2026**
27.464 DF-TM		338	05/2001 → 08/2002		55	24	063534699820	**MAN2011**
27.464 DF-TM		338	05/2001 → 08/2002		100	24	063535255010	**MAN2026**
27.464 FVL	D 2876 LF 03	338	01/2000 → 08/2002		55	24	063534699820	**MAN2011**
27.464 FVL	D 2876 LF 03	338	01/2000 → 08/2002		100	24	063535255010	**MAN2026**
32.293 VFC	D 2865 LF24	213	08/1995 → 01/2000		55	24	063534699820	**MAN2011**
32.314 VF, VFC	D 2866 LF23	228	05/2001 → 12/2001		55	24	063534699820	**MAN2011**
32.314 VF, VFC	D 2866 LF23	228	05/2001 → 12/2001		100	24	063535255010	**MAN2026**
32.314 VFK, VF-HK	D 2866 LF23	228	05/2001 → 12/2001		55	24	063534699820	**MAN2011**

		kW ÷ kW		i	A	V	LONG	SHORT
MAN								
F 2000								
32.314 VFK, VF-HK	D 2866 LF23	228	05/2001 → 12/2001		100	24	063535255010	**MAN2026**
32.314 VF-TM	D 2866 LF23	228	05/2001 → 12/2001		55	24	063534699820	**MAN2011**
32.314 VF-TM	D 2866 LF23	228	05/2001 → 12/2001		100	24	063535255010	**MAN2026**
32.343 VFC	D 2865 LF21	250	08/1995 → 01/2000		55	24	063534699820	**MAN2011**
32.343 VFK	D 2865 LF21	250	08/1995 → 01/2000		55	24	063534699820	**MAN2011**
32.364 VF, VFC	D 2866 LF24	265	05/2001 → 09/2001		55	24	063534699820	**MAN2011**
32.364 VF, VFC	D 2866 LF24	265	05/2001 → 09/2001		100	24	063535255010	**MAN2026**
32.364 VFK, VF-HK	D 2866 LF24	265	05/2001 → 09/2001		55	24	063534699820	**MAN2011**
32.364 VFK, VF-HK	D 2866 LF24	265	05/2001 → 09/2001		100	24	063535255010	**MAN2026**
32.364 VF-TM	D 2866 LF24	265	05/2001 → 09/2002		55	24	063534699820	**MAN2011**
32.364 VF-TM	D 2866 LF24	265	05/2001 → 09/2002		100	24	063535255010	**MAN2026**
32.403 VFC	D 2866 LF20	294	08/1995 → 09/2001		55	24	063534699820	**MAN2011**
32.403 VFC	D 2866 LF20	294	08/1995 → 09/2001		100	24	063535255010	**MAN2026**
32.403 VFK	D 2866 LF20	294	08/1995 → 09/2001		55	24	063534699820	**MAN2011**
32.403 VFK	D 2866 LF20	294	08/1995 → 09/2001		100	24	063535255010	**MAN2026**
32.414 VF, VFC	D 2866 LF25	301	05/2001 → 12/2001		55	24	063534699820	**MAN2011**
32.414 VF, VFC	D 2866 LF25	301	05/2001 → 12/2001		100	24	063535255010	**MAN2026**
32.414 VFK, VF-HK	D 2866 LF25	301	05/2001 → 12/2001		55	24	063534699820	**MAN2011**
32.414 VFK, VF-HK	D 2866 LF25	301	05/2001 → 12/2001		100	24	063535255010	**MAN2026**
32.414 VF-TM	D 2866 LF25	301	05/2001 → 12/2001		55	24	063534699820	**MAN2011**
32.414 VF-TM	D 2866 LF25	301	05/2001 → 12/2001		100	24	063535255010	**MAN2026**
32.463 VFC	D 2876 LF 02	338	08/1995 → 09/2001		55	24	063534699820	**MAN2011**
32.463 VFC	D 2876 LF 02	338	08/1995 → 09/2001		100	24	063535255010	**MAN2026**
32.463 VFK	D 2876 LF 02	338	08/1995 → 09/2001		55	24	063534699820	**MAN2011**
32.463 VFK	D 2876 LF 02	338	08/1995 → 09/2001		100	24	063535255010	**MAN2026**
32.464 VF, VFC	D 2876 LF 03	338	05/2001 → 12/2001		55	24	063534699820	**MAN2011**
32.464 VF, VFC	D 2876 LF 03	338	05/2001 → 12/2001		100	24	063535255010	**MAN2026**
32.464 VFK, VF-HK	D 2876 LF 03	338	05/2001 → 12/2001		55	24	063534699820	**MAN2011**
32.464 VFK, VF-HK	D 2876 LF 03	338	05/2001 → 12/2001		100	24	063535255010	**MAN2026**
32.464 VF-TM	D 2876 LF 03	338	05/2001 → 12/2001		55	24	063534699820	**MAN2011**
32.464 VF-TM	D 2876 LF 03	338	05/2001 → 12/2001		100	24	063535255010	**MAN2026**
33.323 DFAC	D 2865 LF23	235	01/1994 → 12/1995		55	24	063534699820	**MAN2011**
33.323 DFAK	D 2865 LF23	235	01/1994 → 12/1995		55	24	063534699820	**MAN2011**
33.323 DFAS	D 2865 LF23	235	01/1994 → 12/1995		55	24	063534699820	**MAN2011**
33.323 DFC	D 2865 LF23	235	01/1994 → 12/1995		55	24	063534699820	**MAN2011**
33.323 DFK	D 2865 LF23	235	01/1994 → 12/1995		55	24	063534699820	**MAN2011**
33.323 DFS	D 2865 LF23	235	01/1994 → 12/1995		55	24	063534699820	**MAN2011**
33.343 DFAC	D 2865 LF21	250	01/1994 → 01/2000		55	24	063534699820	**MAN2011**
33.343 DFAK	D 2865 LF21	250	01/1994 → 01/2000		55	24	063534699820	**MAN2011**
33.343 DFAS	D 2865 LF21	250	01/1994 → 01/2000		55	24	063534699820	**MAN2011**
33.343 DFC	D 2865 LF21	250	01/1994 → 01/2000		55	24	063534699820	**MAN2011**
33.343 DFK	D 2865 LF21	250	01/1994 → 01/2000		55	24	063534699820	**MAN2011**
33.343 DFS	D 2865 LF21	250	01/1994 → 01/2000		55	24	063534699820	**MAN2011**
33.364 DFAC		265	05/2001 → 09/2001		55	24	063534699820	**MAN2011**

		kW ÷ kW		i	A	V	LONG	SHORT
MAN								
F 2000								
33.364 DFAC		265	05/2001 → 09/2001		100	24	063535255010	**MAN2026**
33.364 DFAK, DFA-KI		265	05/2001 → 09/2001		55	24	063534699820	**MAN2011**
33.364 DFAK, DFA-KI		265	05/2001 → 09/2001		100	24	063535255010	**MAN2026**
33.364 DFAS		265	05/2001 → 09/2001		55	24	063534699820	**MAN2011**
33.364 DFAS		265	05/2001 → 09/2001		100	24	063535255010	**MAN2026**
33.364 DFC		265	05/2001 → 09/2001		55	24	063534699820	**MAN2011**
33.364 DFC		265	05/2001 → 09/2001		100	24	063535255010	**MAN2026**
33.364 DFK, DF-KI		265	05/2001 → 09/2001		55	24	063534699820	**MAN2011**
33.364 DFK, DF-KI		265	05/2001 → 09/2001		100	24	063535255010	**MAN2026**
33.364 DFS, DFRS		265	05/2001 → 09/2001		55	24	063534699820	**MAN2011**
33.364 DFS, DFRS		265	05/2001 → 09/2001		100	24	063535255010	**MAN2026**
33.373 DFAC	D 2866 LF21	272	01/1994 → 12/1995		55	24	063534699820	**MAN2011**
33.373 DFAC	D 2866 LF21	272	01/1994 → 12/1995		100	24	063535255010	**MAN2026**
33.373 DFAK, DFA-KI	D 2866 LF21	272	01/1994 → 12/1995		55	24	063534699820	**MAN2011**
33.373 DFAK, DFA-KI	D 2866 LF21	272	01/1994 → 12/1995		100	24	063535255010	**MAN2026**
33.373 DFAS	D 2866 LF21	272	01/1994 → 12/1995		55	24	063534699820	**MAN2011**
33.373 DFAS	D 2866 LF21	272	01/1994 → 12/1995		100	24	063535255010	**MAN2026**
33.373 DFC	D 2866 LF21	272	01/1994 → 12/1995		55	24	063534699820	**MAN2011**
33.373 DFC	D 2866 LF21	272	01/1994 → 12/1995		100	24	063535255010	**MAN2026**
33.373 DFK, DF-KI	D 2866 LF21	272	01/1994 → 12/1995		55	24	063534699820	**MAN2011**
33.373 DFK, DF-KI	D 2866 LF21	272	01/1994 → 12/1995		100	24	063535255010	**MAN2026**
33.373 DFS, DFRS	D 2866 LF21	272	01/1994 → 12/1995		55	24	063534699820	**MAN2011**
33.373 DFS, DFRS	D 2866 LF21	272	01/1994 → 12/1995		100	24	063535255010	**MAN2026**
33.403 DFAC	D 2866 LF20	294	01/1994 → 09/2001		55	24	063534699820	**MAN2011**
33.403 DFAC	D 2866 LF20	294	01/1994 → 09/2001		100	24	063535255010	**MAN2026**
33.403 DFAK, DFA-KI	D 2866 LF20	294	01/1994 → 09/2001		55	24	063534699820	**MAN2011**
33.403 DFAK, DFA-KI	D 2866 LF20	294	01/1994 → 09/2001		100	24	063535255010	**MAN2026**
33.403 DFAS	D 2866 LF20	294	01/1994 → 09/2001		55	24	063534699820	**MAN2011**
33.403 DFAS	D 2866 LF20	294	01/1994 → 09/2001		100	24	063535255010	**MAN2026**
33.403 DFC	D 2866 LF20	294	01/1994 → 09/2001		55	24	063534699820	**MAN2011**
33.403 DFC	D 2866 LF20	294	01/1994 → 09/2001		100	24	063535255010	**MAN2026**
33.403 DFK, DF-KI	D 2866 LF20	294	01/1994 → 09/2001		55	24	063534699820	**MAN2011**
33.403 DFK, DF-KI	D 2866 LF20	294	01/1994 → 09/2001		100	24	063535255010	**MAN2026**
33.403 DFS, DFRS	D 2866 LF20	294	01/1994 → 09/2001		55	24	063534699820	**MAN2011**
33.403 DFS, DFRS	D 2866 LF20	294	01/1994 → 09/2001		100	24	063535255010	**MAN2026**
33.414 DFAC		301	05/2001 → 08/2002		55	24	063534699820	**MAN2011**
33.414 DFAC		301	05/2001 → 08/2002		100	24	063535255010	**MAN2026**
33.414 DFAK, DFA-KI		301	05/2001 → 08/2002		55	24	063534699820	**MAN2011**
33.414 DFAK, DFA-KI		301	05/2001 → 08/2002		100	24	063535255010	**MAN2026**
33.414 DFAS		301	05/2001 → 08/2002		55	24	063534699820	**MAN2011**
33.414 DFAS		301	05/2001 → 08/2002		100	24	063535255010	**MAN2026**
33.414 DFC		301	05/2001 → 08/2002		55	24	063534699820	**MAN2011**
33.414 DFC		301	05/2001 → 08/2002		100	24	063535255010	**MAN2026**
33.414 DFK, DF-KI		301	05/2001 → 08/2002		55	24	063534699820	**MAN2011**

		kW ÷ kW		i	A	V	MAGNETI MARELLI LONG	MAGNETI MARELLI SHORT
MAN								
F 2000								
33.414 DFK, DF-KI		301	05/2001 → 08/2002		100	24	063535255010	**MAN2026**
33.414 DFS, DFRS		301	05/2001 → 08/2002		55	24	063534699820	**MAN2011**
33.414 DFS, DFRS		301	05/2001 → 08/2002		100	24	063535255010	**MAN2026**
33.423 DFAC	D 2866 LF22	309	01/1994 → 12/1995		55	24	063534699820	**MAN2011**
33.423 DFAC	D 2866 LF22	309	01/1994 → 12/1995		100	24	063535255010	**MAN2026**
33.423 DFAK, DFA-KI	D 2866 LF22	309	01/1994 → 12/1995		55	24	063534699820	**MAN2011**
33.423 DFAK, DFA-KI	D 2866 LF22	309	01/1994 → 12/1995		100	24	063535255010	**MAN2026**
33.423 DFAS	D 2866 LF22	309	01/1994 → 12/1995		55	24	063534699820	**MAN2011**
33.423 DFAS	D 2866 LF22	309	01/1994 → 12/1995		100	24	063535255010	**MAN2026**
33.423 DFC	D 2866 LF22	309	01/1994 → 12/1995		55	24	063534699820	**MAN2011**
33.423 DFC	D 2866 LF22	309	01/1994 → 12/1995		100	24	063535255010	**MAN2026**
33.423 DFK, DF-KI	D 2866 LF22	309	01/1994 → 12/1995		55	24	063534699820	**MAN2011**
33.423 DFK, DF-KI	D 2866 LF22	309	01/1994 → 12/1995		100	24	063535255010	**MAN2026**
33.423 DFS, DFRS	D 2866 LF22	309	01/1994 → 12/1995		55	24	063534699820	**MAN2011**
33.423 DFS, DFRS	D 2866 LF22	309	01/1994 → 12/1995		100	24	063535255010	**MAN2026**
33.463 DFAC	D 2876 LF 02	338	01/1994 → 09/2001		55	24	063534699820	**MAN2011**
33.463 DFAC	D 2876 LF 02	338	01/1994 → 09/2001		100	24	063535255010	**MAN2026**
33.463 DFAK, DFA-KI	D 2876 LF 02	338	01/1994 → 09/2001		55	24	063534699820	**MAN2011**
33.463 DFAK, DFA-KI	D 2876 LF 02	338	01/1994 → 09/2001		100	24	063535255010	**MAN2026**
33.463 DFAS	D 2876 LF 02	338	01/1994 → 09/2001		55	24	063534699820	**MAN2011**
33.463 DFAS	D 2876 LF 02	338	01/1994 → 09/2001		100	24	063535255010	**MAN2026**
33.463 DFC	D 2876 LF 02	338	01/1994 → 09/2001		55	24	063534699820	**MAN2011**
33.463 DFC	D 2876 LF 02	338	01/1994 → 09/2001		100	24	063535255010	**MAN2026**
33.463 DFK, DF-KI	D 2876 LF 02	338	01/1994 → 09/2001		55	24	063534699820	**MAN2011**
33.463 DFK, DF-KI	D 2876 LF 02	338	01/1994 → 09/2001		100	24	063535255010	**MAN2026**
33.463 DFS, DFRS	D 2876 LF 02	338	01/1994 → 09/2001		55	24	063534699820	**MAN2011**
33.463 DFS, DFRS	D 2876 LF 02	338	01/1994 → 09/2001		100	24	063535255010	**MAN2026**
33.464 DFAC		338	05/2001 →		55	24	063534699820	**MAN2011**
33.464 DFAC		338	05/2001 →		100	24	063535255010	**MAN2026**
33.464 DFAK, DFA-KI		338	05/2001 →		55	24	063534699820	**MAN2011**
33.464 DFAK, DFA-KI		338	05/2001 →		100	24	063535255010	**MAN2026**
33.464 DFAS		338	05/2001 →		55	24	063534699820	**MAN2011**
33.464 DFAS		338	05/2001 →		100	24	063535255010	**MAN2026**
33.464 DFC		338	05/2001 →		55	24	063534699820	**MAN2011**
33.464 DFC		338	05/2001 →		100	24	063535255010	**MAN2026**
33.464 DFK, DF-KI		338	05/2001 →		55	24	063534699820	**MAN2011**
33.464 DFK, DF-KI		338	05/2001 →		100	24	063535255010	**MAN2026**
33.464 DFS, DFRS		338	05/2001 →		55	24	063534699820	**MAN2011**
33.464 DFS, DFRS		338	05/2001 →		100	24	063535255010	**MAN2026**
35.314 VF-TM		228	03/2002 → 09/2003		55	24	063534699820	**MAN2011**
35.314 VF-TM		228	03/2002 → 09/2003		100	24	063535255010	**MAN2026**
35.343 VFC	D 2865 LF21	250	08/1995 → 01/2000		55	24	063534699820	**MAN2011**
35.343 VFK	D 2865 LF21	250	08/1995 → 01/2000		55	24	063534699820	**MAN2011**
35.364 VF, VFC, VFRC	D 2866 LF24	265	05/2001 → 09/2001		55	24	063534699820	**MAN2011**

		kW ÷ kW			A	V	LONG	SHORT
MAN								
F 2000								
35.364 VF, VFC, VFRC	D 2866 LF24	265	05/2001 → 09/2001		100	24	063535255010	**MAN2026**
35.403 VF, VFC, VFRC	D 2866 LF20	294	08/1995 → 09/2001		55	24	063534699820	**MAN2011**
35.403 VF, VFC, VFRC	D 2866 LF20	294	08/1995 → 09/2001		100	24	063535255010	**MAN2026**
35.414 VF, VFC, VFRC	D 2866 LF25	301	09/2002 → 06/2003		55	24	063534699820	**MAN2011**
35.414 VF, VFC, VFRC	D 2866 LF25	301	09/2002 → 06/2003		100	24	063535255010	**MAN2026**
35.414 VFK, VF-HK, VF-KI	D 2866 LF25	301	09/2002 → 06/2003		55	24	063534699820	**MAN2011**
35.414 VFK, VF-HK, VF-KI	D 2866 LF25	301	09/2002 → 06/2003		100	24	063535255010	**MAN2026**
35.414 VF-TM	D 2866 LF25	301	09/2002 → 06/2003		55	24	063534699820	**MAN2011**
35.414 VF-TM	D 2866 LF25	301	09/2002 → 06/2003		100	24	063535255010	**MAN2026**
35.463 VF, VFC, VFRC	D 2876 LF 02	338	08/1995 → 09/2001		55	24	063534699820	**MAN2011**
35.463 VF, VFC, VFRC	D 2876 LF 02	338	08/1995 → 09/2001		100	24	063535255010	**MAN2026**
35.463 VFK, VF-HK, VF-KI	D 2876 LF 02	338	08/1995 → 09/2001		55	24	063534699820	**MAN2011**
35.463 VFK, VF-HK, VF-KI	D 2876 LF 02	338	08/1995 → 09/2001		100	24	063535255010	**MAN2026**
35.464 VF, VFC, VFRC	D 2876 LF 03	338	05/2001 → 08/2002		55	24	063534699820	**MAN2011**
35.464 VF, VFC, VFRC	D 2876 LF 03	338	05/2001 → 08/2002		100	24	063535255010	**MAN2026**
35.464 VFK, VF-HK, VF-KI	D 2876 LF 03	338	03/2002 → 08/2002		55	24	063534699820	**MAN2011**
35.464 VFK, VF-HK, VF-KI	D 2876 LF 03	338	03/2002 → 08/2002		100	24	063535255010	**MAN2026**
35.464 VF-TM	D 2876 LF 03	338	03/2002 → 08/2002		55	24	063534699820	**MAN2011**
35.464 VF-TM	D 2876 LF 03	338	03/2002 → 08/2002		100	24	063535255010	**MAN2026**
40.403 DFAK	D 2866 LF20	294	08/1995 → 09/2001		55	24	063534699820	**MAN2011**
40.403 DFAK	D 2866 LF20	294	08/1995 → 09/2001		100	24	063535255010	**MAN2026**
40.403 DFAS	D 2866 LF20	294	08/1995 → 09/2001		55	24	063534699820	**MAN2011**
40.403 DFAS	D 2866 LF20	294	08/1995 → 09/2001		100	24	063535255010	**MAN2026**
40.403 DFK	D 2866 LF20	294	08/1995 → 09/2001		55	24	063534699820	**MAN2011**
40.403 DFK	D 2866 LF20	294	08/1995 → 09/2001		100	24	063535255010	**MAN2026**
40.403 DFS	D 2866 LF20	294	08/1995 → 09/2001		55	24	063534699820	**MAN2011**
40.403 DFS	D 2866 LF20	294	08/1995 → 09/2001		100	24	063535255010	**MAN2026**
40.414 DFAK		301	05/2001 → 08/2002		55	24	063534699820	**MAN2011**
40.414 DFAK		301	05/2001 → 08/2002		100	24	063535255010	**MAN2026**
40.414 DFK		301	05/2001 → 08/2002		55	24	063534699820	**MAN2011**
40.414 DFK		301	05/2001 → 08/2002		100	24	063535255010	**MAN2026**
40.463 DFAK	D 2876 LF 02	338	08/1995 → 09/2001		55	24	063534699820	**MAN2011**
40.463 DFAK	D 2876 LF 02	338	08/1995 → 09/2001		100	24	063535255010	**MAN2026**
40.463 DFAS	D 2876 LF 02	338	08/1995 → 09/2001		55	24	063534699820	**MAN2011**
40.463 DFAS	D 2876 LF 02	338	08/1995 → 09/2001		100	24	063535255010	**MAN2026**
40.463 DFK	D 2876 LF 02	338	08/1995 → 09/2001		55	24	063534699820	**MAN2011**
40.463 DFK	D 2876 LF 02	338	08/1995 → 09/2001		100	24	063535255010	**MAN2026**
40.463 DFS	D 2876 LF 02	338	08/1995 → 09/2001		55	24	063534699820	**MAN2011**

		kW ÷ kW		i	A	V	MAGNETI MARELLI LONG	MAGNETI MARELLI SHORT
MAN								
F 2000								
40.463 DFS	D 2876 LF 02	338	08/1995 → 09/2001		100	24	063535255010	**MAN2026**
41.343 VFC	D 2865 LF21	250	08/1995 → 09/2001		55	24	063534699820	**MAN2011**
41.343 VFK	D 2865 LF21	250	08/1995 → 09/2001		55	24	063534699820	**MAN2011**
41.364 VF, VFC, VFRC		265	05/2001 → 08/2002		55	24	063534699820	**MAN2011**
41.364 VF, VFC, VFRC		265	05/2001 → 08/2002		100	24	063535255010	**MAN2026**
41.364 VFK, VF-HK, VF-KI		265	03/2002 → 08/2002		55	24	063534699820	**MAN2011**
41.364 VFK, VF-HK, VF-KI		265	03/2002 → 08/2002		100	24	063535255010	**MAN2026**
41.403 VF, VFC, VFRC	D 2866 LF20	294	08/1995 → 09/2001		55	24	063534699820	**MAN2011**
41.403 VF, VFC, VFRC	D 2866 LF20	294	08/1995 → 09/2001		100	24	063535255010	**MAN2026**
41.403 VFK, VF-HK, VF-KI	D 2866 LF20	294	08/1995 → 09/2001		55	24	063534699820	**MAN2011**
41.403 VFK, VF-HK, VF-KI	D 2866 LF20	294	08/1995 → 09/2001		100	24	063535255010	**MAN2026**
41.414 VF, VFC, VFRC		301	05/2001 → 08/2002		55	24	063534699820	**MAN2011**
41.414 VF, VFC, VFRC		301	05/2001 → 08/2002		100	24	063535255010	**MAN2026**
41.414 VFK, VF-HK, VF-KI		301	03/2002 → 08/2002		55	24	063534699820	**MAN2011**
41.414 VFK, VF-HK, VF-KI		301	03/2002 → 08/2002		100	24	063535255010	**MAN2026**
41.463 VF, VFC, VFRC	D 2876 LF 02	338	08/1995 → 09/2001		55	24	063534699820	**MAN2011**
41.463 VF, VFC, VFRC	D 2876 LF 02	338	08/1995 → 09/2001		100	24	063535255010	**MAN2026**
41.463 VFK, VF-HK, VF-KI	D 2876 LF 02	338	08/1995 → 09/2001		55	24	063534699820	**MAN2011**
41.463 VFK, VF-HK, VF-KI	D 2876 LF 02	338	08/1995 → 09/2001		100	24	063535255010	**MAN2026**
41.464 VF, VFC, VFRC	D 2876 LF 06	338	07/1999 → 08/2002		55	24	063534699820	**MAN2011**
41.464 VF, VFC, VFRC	D 2876 LF 06	338	07/1999 → 08/2002		100	24	063535255010	**MAN2026**
41.464 VFK, VF-HK, VF-KI		338	03/2002 → 08/2002		55	24	063534699820	**MAN2011**
41.464 VFK, VF-HK, VF-KI		338	03/2002 → 08/2002		100	24	063535255010	**MAN2026**
F 90								
19.262 F, 19.262 FL, 19.262 FLL	D 2865 LF/260	191	01/1988 → 02/1990		55	24	063534699820	**MAN2011**
19.262 FA	D 2865 LF/260	191	02/1989 → 02/1990		55	24	063534699820	**MAN2011**
19.262 FAK	D 2865 LF/260	191	02/1989 → 02/1990		55	24	063534699820	**MAN2011**
19.262 FAS	D 2865 LF/260	191	02/1989 → 02/1990		55	24	063534699820	**MAN2011**
19.262 FK	D 2865 LF/260	191	01/1988 → 02/1990		55	24	063534699820	**MAN2011**
19.262 FS, 19.262 FLS, 19.262 FLLS	D 2865 LF/260	191	01/1988 → 02/1990		55	24	063534699820	**MAN2011**
19.272 F, 19.272 FL, 19.272 FLL	D 2865 LF02, D 2865 LF05	198	02/1990 → 05/1995		55	24	063534699820	**MAN2011**

		kW ÷ kW			A	V	LONG	SHORT
MAN								
F 90								
19.272 FA	D 2865 LF02, D 2865 LF05	198	02/1990 → 05/1995		55	24	063534699820	**MAN2011**
19.272 FAK	D 2865 LF02, D 2865 LF05	198	02/1990 → 05/1995		55	24	063534699820	**MAN2011**
19.272 FAS	D 2865 LF02, D 2865 LF05	198	02/1990 → 05/1995		55	24	063534699820	**MAN2011**
19.272 FK	D 2865 LF02, D 2865 LF05	198	02/1990 → 05/1995		55	24	063534699820	**MAN2011**
19.272 FS, 19.272 FLS, 19.272 FLLS	D 2865 LF02, D 2865 LF05	198	02/1990 → 05/1995		55	24	063534699820	**MAN2011**
19.322 F, 19.322 FL, 19.322 FLL	D 2865 LF03, D 2865 LF06	235	02/1990 → 05/1995		55	24	063534699820	**MAN2011**
19.322 FA	D 2865 LF03, D 2865 LF06	235	02/1990 → 06/1996		55	24	063534699820	**MAN2011**
19.322 FAK	D 2865 LF03, D 2865 LF06	235	02/1990 → 06/1996		55	24	063534699820	**MAN2011**
19.322 FAS	D 2865 LF03, D 2865 LF06	235	02/1990 → 06/1996		55	24	063534699820	**MAN2011**
19.322 FK	D 2865 LF03, D 2865 LF06	235	02/1990 → 05/1995		55	24	063534699820	**MAN2011**
19.322 FS, 19.322 FLS, 19.322 FLLS	D 2865 LF03, D 2865 LF06	235	02/1990 → 05/1995		55	24	063534699820	**MAN2011**
19.332 FA	D 2866 LF/330	243	05/1988 → 02/1990		55	24	063534699820	**MAN2011**
19.332 FAK	D 2866 LF/330	243	05/1988 → 02/1990		55	24	063534699820	**MAN2011**
19.342 F, 19.342 FL, 19.342 FLL	D 2865 LF09	250	05/1994 → 05/1995		55	24	063534699820	**MAN2011**
19.342 FA	D 2865 LF09	250	05/1994 → 06/1996		55	24	063534699820	**MAN2011**
19.342 FAK	D 2865 LF09	250	05/1994 → 06/1996		55	24	063534699820	**MAN2011**
19.342 FAS	D 2865 LF09	250	05/1994 → 06/1996		55	24	063534699820	**MAN2011**
19.342 FK	D 2865 LF09	250	05/1994 → 05/1995		55	24	063534699820	**MAN2011**
19.342 FS, 19.342 FLS, 19.342 FLLS	D 2865 LF09	250	05/1994 → 05/1995		55	24	063534699820	**MAN2011**
19.372 F, 19.372 FL, 19.372 FLL	D 2866 LF03, D 2866 LF05, D 2866 LF15	272	02/1990 → 04/1992		55	24	063534699820	**MAN2011**
19.372 FA	D 2866 LF03, D 2866 LF05, D 2866 LF15	272	02/1990 → 04/1992		55	24	063534699820	**MAN2011**
19.372 FAK	D 2866 LF03, D 2866 LF05, D 2866 LF15	272	02/1990 → 04/1992		55	24	063534699820	**MAN2011**
19.372 FAS	D 2866 LF03, D 2866 LF05, D 2866 LF15	272	02/1990 → 04/1992		55	24	063534699820	**MAN2011**

		kW ÷ kW		i	A	V	MAGNETI MARELLI LONG	MAGNETI MARELLI SHORT
MAN								
F 90								
19.372 FK	D 2866 LF03, D 2866 LF05, D 2866 LF15	272	02/1990 → 04/1992		55	24	063534699820	**MAN2011**
19.372 FS, 19.372 FLS, 19.372 FLLS	D 2866 LF03, D 2866 LF05, D 2866 LF15	272	02/1990 → 04/1992		55	24	063534699820	**MAN2011**
19.422 F,19.422 FL, 19.422 FLL	D 2866 LF06, D 2866 LF09, D 2866 LF10	309	02/1990 → 04/1992		55	24	063534699820	**MAN2011**
19.422 FA	D 2866 LF06, D 2866 LF09	309	02/1990 → 04/1992		55	24	063534699820	**MAN2011**
19.422 FAK	D 2866 LF06, D 2866 LF09	309	02/1990 → 04/1992		55	24	063534699820	**MAN2011**
19.422 FAS	D 2866 LF06, D 2866 LF09	309	02/1990 → 04/1992		55	24	063534699820	**MAN2011**
19.422 FK	D 2866 LF06, D 2866 LF09	309	02/1990 → 04/1992		55	24	063534699820	**MAN2011**
19.422 FS, 19.422 FLS, 19.422 FLLS	D 2866 LF06, D 2866 LF09, D 2866 LF10	309	02/1990 → 04/1992		55	24	063534699820	**MAN2011**
19.502 F, 19.502 FL, 19.502 FLL	D 2840 LF01, D 2840 LF04, D 2840 LF06	368	02/1990 → 06/1996		55	24	063534699820	**MAN2011**
19.502 FS, 19.502 FLS, 19.502 FLLS	D 2840 LF01, D 2840 LF04, D 2840 LF06	368	02/1990 → 06/1996		55	24	063534699820	**MAN2011**
24.262 DF	D 2865 LF/260	191	01/1988 → 02/1990		55	24	063534699820	**MAN2011**
24.262 DFK	D 2865 LF/260	191	01/1988 → 02/1990		55	24	063534699820	**MAN2011**
24.262 DFS, 24.262 DFLS	D 2865 LF/260	191	07/1989 → 02/1990		55	24	063534699820	**MAN2011**
24.262 FNL, 24.262 FNLL, 24.262 FVL	D 2865 LF/260	191	01/1988 → 02/1990		55	24	063534699820	**MAN2011**
24.272 DF	D 2865 LF02	198	02/1990 → 12/1990		55	24	063534699820	**MAN2011**
24.272 DFK	D 2865 LF02	198	02/1990 → 12/1990		55	24	063534699820	**MAN2011**
24.272 DFS, 24.272 DFLS	D 2865 LF02	198	05/1994 → 04/1995		55	24	063534699820	**MAN2011**
24.272 FNL, 24.272 FNLL, 24.272 FVL	D 2865 LF02, D 2865 LF05	198	02/1990 → 05/1995		55	24	063534699820	**MAN2011**
24.272 FNLS, 24.272 FVLS	D 2865 LF02, D 2865 LF05	198	02/1990 → 05/1995		55	24	063534699820	**MAN2011**
24.302 DF	D 2866 LF04	220	05/1990 → 12/1990		55	24	063534699820	**MAN2011**
24.302 DFK	D 2866 LF04	220	05/1990 → 12/1990		55	24	063534699820	**MAN2011**
24.302 DFS, 24.302 DFLS	D 2866 LF04	220	05/1990 → 04/1992		55	24	063534699820	**MAN2011**

		kW ÷ kW		i	A	V	LONG	SHORT
MAN								
F 90								
24.302 FNL, 24.302 FNLL, 24.302 FVL	D 2866 LF04	220	05/1990 → 10/1990		55	24	063534699820	**MAN2011**
24.322 DF	D 2865 LF03	235	02/1990 → 12/1990		55	24	063534699820	**MAN2011**
24.322 DFK	D 2865 LF03	235	02/1990 → 12/1990		55	24	063534699820	**MAN2011**
24.322 DFS, 24.322 DFLS	D 2865 LF03	235	02/1990 → 12/1990		55	24	063534699820	**MAN2011**
24.322 FNL, 24.322 FNLL, 24.322 FVL	D 2865 LF03, D 2865 LF06	235	12/1990 → 05/1994		55	24	063534699820	**MAN2011**
24.322 FNLS, 24.322 FVLS	D 2865 LF03, D 2865 LF06	235	02/1990 → 12/1990		55	24	063534699820	**MAN2011**
24.342 FNL, 24.342 FNLL	D 2865 LF09	250	05/1994 → 05/1995		55	24	063534699820	**MAN2011**
24.372 DF	D 2866 LF03	272	02/1990 → 12/1990		55	24	063534699820	**MAN2011**
24.372 DFK	D 2866 LF03	272	02/1990 → 12/1990		55	24	063534699820	**MAN2011**
24.372 DFS, 24.372 DFLS	D 2866 LF03	272	02/1990 → 04/1995		55	24	063534699820	**MAN2011**
24.372 FNL, 24.372 FNLL, 24.372 FVL	D 2866 LF03, D 2866 LF15	272	02/1990 → 12/1990		55	24	063534699820	**MAN2011**
24.372 FNLS, 24.372 FVLS	D 2866 LF03, D 2866 LF15	272	02/1990 → 12/1990		55	24	063534699820	**MAN2011**
24.422 DF	D 2866 LF06	309	02/1990 → 12/1990		55	24	063534699820	**MAN2011**
24.422 DFK	D 2866 LF06	309	02/1990 → 12/1990		55	24	063534699820	**MAN2011**
24.422 DFS, 24.422 DFLS	D 2866 LF06	309	02/1990 → 12/1990		55	24	063534699820	**MAN2011**
24.422 FNL, 24.422 FNLL, 24.422 FVL	D 2866 LF06, D 2866 LF09	309	02/1990 → 05/1995		55	24	063534699820	**MAN2011**
24.502 DF	D 2840 LF01	368	02/1990 → 12/1990		55	24	063534699820	**MAN2011**
24.502 DFK	D 2840 LF01	368	02/1990 → 12/1990		55	24	063534699820	**MAN2011**
24.502 DFS	D 2840 LF01	368	02/1990 → 12/1990		55	24	063534699820	**MAN2011**
24.502 FNL	D 2840 LF01	368	02/1990 → 12/1990		55	24	063534699820	**MAN2011**
25.272 DF	D 2865 LF02, D 2865 LF05	198	09/1990 → 10/1992		55	24	063534699820	**MAN2011**
25.272 DFK	D 2865 LF02, D 2865 LF05	198	09/1990 → 10/1992		55	24	063534699820	**MAN2011**
25.272 DFS, 25.272 DFLS	D 2865 LF02, D 2865 LF05	198	09/1990 → 10/1992		55	24	063534699820	**MAN2011**
25.272 FNL, 25.272 FNLL, 25.272 FVL	D 2865 LF02, D 2865 LF05	198	09/1990 → 10/1993		55	24	063534699820	**MAN2011**
25.302 DF	D 2866 LF04	220	09/1990 → 12/1991		55	24	063534699820	**MAN2011**
25.302 DFK	D 2866 LF04	220	09/1990 → 12/1991		55	24	063534699820	**MAN2011**
25.302 DFS, 25.302 DFLS	D 2866 LF04	220	09/1990 → 12/1991		55	24	063534699820	**MAN2011**
25.302 FNL, 25.302 FNLL	D 2866 LF04	220	09/1990 → 12/1991		55	24	063534699820	**MAN2011**

		kW ÷ kW		i	A	V	LONG	SHORT
MAN								
F 90								
25.302 FNLS, 25.302 FVLS	D 2866 LF04	220	09/1990 → 12/1991		55	24	063534699820	**MAN2011**
25.322 DF	D 2865 LF03, D 2865 LF06	235	09/1990 → 12/1992		55	24	063534699820	**MAN2011**
25.322 DFK	D 2865 LF03, D 2865 LF06	235	09/1990 → 12/1992		55	24	063534699820	**MAN2011**
25.322 DFS, 25.322 DFLS	D 2865 LF03, D 2865 LF06	235	09/1990 → 10/1992		55	24	063534699820	**MAN2011**
25.322 FNL, 25.322 FNLL	D 2865 LF03, D 2865 LF06	235	09/1990 → 10/1992		55	24	063534699820	**MAN2011**
25.322 FNLS, 25.322 FVLS	D 2865 LF03, D 2865 LF06	235	09/1990 → 12/1992		55	24	063534699820	**MAN2011**
25.372 DF	D 2866 LF03, D 2866 LF05	272	09/1990 → 04/1992		55	24	063534699820	**MAN2011**
25.372 DF	D 2866 LXF	249	09/1990 → 04/1992		55	24	063534699820	**MAN2011**
25.372 DFK	D 2866 LF03, D 2866 LF05	272	09/1990 → 04/1992		55	24	063534699820	**MAN2011**
25.372 DFK	D 2866 LXF	249	09/1990 → 04/1992		55	24	063534699820	**MAN2011**
25.372 DFS	D 2866 LXF	249	09/1990 → 04/1992		55	24	063534699820	**MAN2011**
25.372 DFS, 25.372 DFLS	D 2866 LF03, D 2866 LF05	272	09/1990 → 04/1992		55	24	063534699820	**MAN2011**
25.372 FNL, 25.372 FNLL	D 2866 LF03, D 2866 LF05	272	09/1990 → 04/1992		55	24	063534699820	**MAN2011**
25.372 FNLS, 25.372 FVLS	D 2866 LF03, D 2866 LF05	272	09/1990 → 04/1992		55	24	063534699820	**MAN2011**
25.372 FVLS	D 2866 LXF	249	09/1990 → 04/1992		55	24	063534699820	**MAN2011**
25.422 DF	D 2866 LF06, D 2866 LF09	309	09/1990 → 04/1992		55	24	063534699820	**MAN2011**
25.422 DFK	D 2866 LF06, D 2866 LF09	309	09/1990 → 04/1992		55	24	063534699820	**MAN2011**
25.422 DFS, 25.422 DFLS	D 2866 LF06, D 2866 LF09	309	09/1990 → 12/1992		55	24	063534699820	**MAN2011**
25.422 FNL, 25.422 FNLL	D 2866 LF06, D 2866 LF09	309	09/1990 → 12/1992		55	24	063534699820	**MAN2011**
25.422 FNLS, 25.422 FVLS	D 2866 LF06, D 2866 LF09	309	09/1990 → 12/1992		55	24	063534699820	**MAN2011**
25.502 DF	D 2840 LF01, D 2840 LF04	368	09/1990 → 12/1992		55	24	063534699820	**MAN2011**
25.502 DFS	D 2840 LF01, D 2840 LF04	368	09/1990 → 12/1992		55	24	063534699820	**MAN2011**
25.502 FNL	D 2840 LF01, D 2840 LF04	368	09/1990 → 12/1992		55	24	063534699820	**MAN2011**
26.262 DF	D 2865 LF/260	191	01/1988 → 02/1990		55	24	063534699820	**MAN2011**
26.262 DFA	D 2865 LF/260	191	02/1989 → 02/1990		55	24	063534699820	**MAN2011**

		kW ÷ kW		i	A	V	LONG	SHORT
MAN								
F 90								
26.262 DFAK	D 2865 LF/260	191	02/1989 → 02/1990		55	24	063534699820	**MAN2011**
26.262 DFAS	D 2865 LF/260	191	02/1989 → 02/1990		55	24	063534699820	**MAN2011**
26.262 DFK	D 2865 LF/260	191	01/1988 → 02/1990		55	24	063534699820	**MAN2011**
26.262 DFS	D 2865 LF/260	191	01/1988 → 02/1990		55	24	063534699820	**MAN2011**
26.272 DF	D 2865 LF02, D 2865 LF05	198	02/1990 → 06/1996		55	24	063534699820	**MAN2011**
26.272 DFA	D 2865 LF02, D 2865 LF05	198	02/1990 → 12/1992		55	24	063534699820	**MAN2011**
26.272 DFAK	D 2865 LF02, D 2865 LF05	198	02/1990 → 12/1992		55	24	063534699820	**MAN2011**
26.272 DFAS	D 2865 LF02, D 2865 LF05	198	02/1990 → 12/1992		55	24	063534699820	**MAN2011**
26.272 DFK	D 2865 LF02, D 2865 LF05	198	10/1992 → 01/1993		55	24	063534699820	**MAN2011**
26.272 DFS, 26.272 DFLS	D 2865 LF02, D 2865 LF05	198	10/1992 → 01/1993		55	24	063534699820	**MAN2011**
26.272 FNL, 26.272 FNLL	D 2865 LF05	198	03/1991 → 05/1995		55	24	063534699820	**MAN2011**
26.272 FNLS, 26.272 FVLS	D 2865 LF02, D 2865 LF05	198	09/1990 → 12/1995		55	24	063534699820	**MAN2011**
26.302 DF	D 2866 LF04	220	05/1990 → 12/1991		55	24	063534699820	**MAN2011**
26.302 DFA	D 2866 LF04	220	05/1990 → 12/1991		55	24	063534699820	**MAN2011**
26.302 DFAK	D 2866 LF04	220	05/1990 → 12/1991		55	24	063534699820	**MAN2011**
26.302 DFAS	D 2866 LF04	220	05/1990 → 12/1991		55	24	063534699820	**MAN2011**
26.302 DFK	D 2866 LF04	220	05/1990 → 12/1991		55	24	063534699820	**MAN2011**
26.302 DFS	D 2866 LF04	220	05/1990 → 12/1991		55	24	063534699820	**MAN2011**
26.302 FNL, 26.302 FNLL	D 2866 LF04	220	03/1991 → 12/1991		55	24	063534699820	**MAN2011**
26.302 FNLS, 26.302 FVLS	D 2866 LF04	220	09/1990 → 12/1991		55	24	063534699820	**MAN2011**
26.322 DF	D 2865 LF03, D 2865 LF06	235	10/1992 → 01/1993		55	24	063534699820	**MAN2011**
26.322 DFA	D 2865 LF03, D 2865 LF06	235	10/1992 → 12/1992		55	24	063534699820	**MAN2011**
26.322 DFAK	D 2865 LF03, D 2865 LF06	235	02/1990 → 12/1992		55	24	063534699820	**MAN2011**
26.322 DFAS	D 2865 LF03, D 2865 LF06	235	10/1992 → 12/1992		55	24	063534699820	**MAN2011**
26.322 DFK	D 2865 LF03, D 2865 LF06	235	02/1992 → 06/1996		55	24	063534699820	**MAN2011**
26.322 DFS, 26.322 DFLS	D 2865 LF03, D 2865 LF06	235	02/1990 → 06/1996		55	24	063534699820	**MAN2011**
26.322 FNL, 26.322 FNLL	D 2865 LF03, D 2865 LF06	235	03/1991 → 05/1995		55	24	063534699820	**MAN2011**
26.322 FNLS, 26.322 FVLS	D 2865 LF03, D 2865 LF06	235	09/1990 → 12/1995		55	24	063534699820	**MAN2011**

		kW ÷ kW		i	A	V	MAGNETI MARELLI LONG	MAGNETI MARELLI SHORT
MAN								
F 90								
26.342 DF, 26.342 DFL	D 2865 LF09	250	05/1994 → 06/1996		55	24	063534699820	**MAN2011**
26.342 DFK, 26.342 DFLK	D 2865 LF09	250	05/1994 → 06/1996		55	24	063534699820	**MAN2011**
26.342 DFS	D 2865 LF09	250	05/1994 → 06/1996		55	24	063534699820	**MAN2011**
26.372 DF, 26.372 DFL	D 2866 LF03, D 2866 LF05, D 2866 LF15	272	02/1990 → 04/1992		55	24	063534699820	**MAN2011**
26.372 DFA	D 2866 LF03, D 2866 LF05	272	02/1990 → 04/1992		55	24	063534699820	**MAN2011**
26.372 DFAK	D 2866 LF03, D 2866 LF05	272	01/1992 → 04/1992		55	24	063534699820	**MAN2011**
26.372 DFAS	D 2866 LF03, D 2866 LF05	272	02/1990 → 04/1992		55	24	063534699820	**MAN2011**
26.372 DFK	D 2866 LF03, D 2866 LF05, D 2866 LF15	272	01/1992 → 04/1992		55	24	063534699820	**MAN2011**
26.372 DFS	D 2866 LF03, D 2866 LF05, D 2866 LF15	272	02/1990 → 04/1992		55	24	063534699820	**MAN2011**
26.372 FNL, 26.372 FNLL, 26.372 FVL	D 2866 LF03, D 2866 LF05, D 2866 LF15	272	09/1990 → 04/1992		55	24	063534699820	**MAN2011**
26.372 FNLS, 26.372 FVLS	D 2866 LF03, D 2866 LF05, D 2866 LF15	272	01/1992 → 04/1992		55	24	063534699820	**MAN2011**
26.422 DF, 26.422 DFL	D 2866 LF06, D 2866 LF09	309	02/1990 → 04/1992		55	24	063534699820	**MAN2011**
26.422 DFA	D 2866 LF06, D 2866 LF09	309	02/1990 → 04/1992		55	24	063534699820	**MAN2011**
26.422 DFAK	D 2866 LF06, D 2866 LF09	309	02/1990 → 04/1992		55	24	063534699820	**MAN2011**
26.422 DFAS	D 2866 LF06, D 2866 LF09	309	02/1990 → 04/1992		55	24	063534699820	**MAN2011**
26.422 DFK	D 2866 LF06, D 2866 LF09	309	02/1990 → 04/1992		55	24	063534699820	**MAN2011**
26.422 DFS	D 2866 LF06, D 2866 LF09	309	02/1990 → 04/1992		55	24	063534699820	**MAN2011**
26.422 FNL, 26.422 FNLL, 26.422 FVL	D 2866 LF06, D 2866 LF09	309	09/1990 → 04/1992		55	24	063534699820	**MAN2011**
26.422 FNLS, 26.422 FVLS	D 2866 LF06, D 2866 LF09	309	01/1992 → 04/1992		55	24	063534699820	**MAN2011**
26.502 DF	D 2840 LF01, D 2840 LF04, D 2840 LF06	368	02/1990 → 04/1992		55	24	063534699820	**MAN2011**
26.502 DFA	D 2840 LF01, D 2840 LF04	368	02/1990 → 04/1992		55	24	063534699820	**MAN2011**

		kW ÷ kW		i	A	V	MAGNETI MARELLI LONG	MAGNETI MARELLI SHORT
MAN								
F 90								
26.502 DFAS	D 2840 LF01, D 2840 LF04	368	02/1990 → 04/1992		55	24	063534699820	**MAN2011**
26.502 DFS,26.502 DFLS	D 2840 LF04, D 2840 LF06	368	02/1990 → 04/1992		55	24	063534699820	**MAN2011**
26.502 FNL,26.502 FNLL	D 2840 LF01, D 2840 LF04, D 2840 LF06	368	09/1991 → 06/1996		55	24	063534699820	**MAN2011**
32.262 VF	D 2865 LF/260	191	02/1989 → 02/1990		55	24	063534699820	**MAN2011**
32.262 VFK	D 2865 LF/260	191	02/1989 → 02/1990		55	24	063534699820	**MAN2011**
32.262 VFTM	D 2865 LF/260	191	02/1989 → 02/1990		55	24	063534699820	**MAN2011**
32.272 VF	D 2865 LF02, D 2865 LF05	198	10/1992 → 04/1995		55	24	063534699820	**MAN2011**
32.272 VFK	D 2865 LF02, D 2865 LF05	198	02/1990 → 05/1994		55	24	063534699820	**MAN2011**
32.302 VF	D 2866 LF04	220	05/1990 → 09/1991		55	24	063534699820	**MAN2011**
32.302 VFK	D 2866 LF04	220	05/1990 → 09/1991		55	24	063534699820	**MAN2011**
32.322 VF	D 2865 LF03, D 2865 LF06	235	02/1990 → 05/1994		55	24	063534699820	**MAN2011**
32.322 VFK	D 2865 LF03, D 2865 LF06	235	02/1990 → 05/1994		55	24	063534699820	**MAN2011**
32.342 VFK	D 2865 LF09	250	05/1994 → 06/1996		55	24	063534699820	**MAN2011**
32.372 VF	D 2866 LF03, D 2866 LF05, D 2866 LF15	272	02/1990 → 04/1992		55	24	063534699820	**MAN2011**
32.422 VF	D 2866 LF06, D 2866 LF09	309	02/1990 → 04/1992		55	24	063534699820	**MAN2011**
32.422 VFK		309	02/1990 → 04/1992		55	24	063534699820	**MAN2011**
33.242 DFAK	D 2866 F/240	177	01/1988 → 08/1988		55	24	063534699820	**MAN2011**
33.262 DF	D 2865 LF/260	191	08/1988 → 02/1990		55	24	063534699820	**MAN2011**
33.262 DFA	D 2865 LF/260	191	07/1989 → 02/1990		55	24	063534699820	**MAN2011**
33.262 DFAK	D 2865 LF/260	191	07/1989 → 02/1990		55	24	063534699820	**MAN2011**
33.262 DFK	D 2865 LF/260	191	08/1988 → 02/1990		55	24	063534699820	**MAN2011**
33.272 DF	D 2865 LF05	198	10/1992 → 04/1995		55	24	063534699820	**MAN2011**
33.272 DFA	D 2865 LF05	198	10/1992 → 04/1995		55	24	063534699820	**MAN2011**
33.272 FVL	D 2865 LF05	191 198	10/1992 → 04/1995		55	24	063534699820	**MAN2011**
33.322 DF	D 2865 LF03, D 2865 LF06	235	09/1991 → 06/1996		55	24	063534699820	**MAN2011**
33.322 DFA	D 2865 LF03, D 2865 LF06	235	09/1991 → 06/1996		55	24	063534699820	**MAN2011**
33.322 FVL	D 2865 LF03, D 2865 LF06	235	09/1991 → 06/1996		55	24	063534699820	**MAN2011**
33.342 DF	D 2865 LF09	250	05/1994 → 06/1996		55	24	063534699820	**MAN2011**
33.342 DFA	D 2865 LF09	250	05/1994 → 06/1996		55	24	063534699820	**MAN2011**
33.372 DF	D 2866 LF03, D 2866 LF05, D 2866 LF15	272	09/1991 → 04/1992		55	24	063534699820	**MAN2011**

		kW ÷ kW		i	A	V	LONG	SHORT
MAN								
F 90								
33.372 DFA	D 2866 LF03, D 2866 LF05, D 2866 LF15	272	09/1991 → 04/1992		55	24	063534699820	**MAN2011**
33.372 DFAK	D 2866 LF03, D 2866 LF05, D 2866 LF15	272	09/1991 → 04/1992		55	24	063534699820	**MAN2011**
33.372 DFK	D 2866 LF03, D 2866 LF05, D 2866 LF15	272	09/1991 → 04/1992		55	24	063534699820	**MAN2011**
33.372 DFS	D 2866 LF03, D 2866 LF05, D 2866 LF15	272	09/1991 → 06/1996		55	24	063534699820	**MAN2011**
33.422 DF	D 2866 LF06, D 2866 LF09	309	09/1991 → 04/1992		55	24	063534699820	**MAN2011**
33.422 DFA	D 2866 LF06, D 2866 LF09	309	09/1991 → 04/1992		55	24	063534699820	**MAN2011**
33.422 DFAK	D 2866 LF06, D 2866 LF09	309	01/1994 → 06/1996		55	24	063534699820	**MAN2011**
33.422 DFK	D 2866 LF06, D 2866 LF09	309	01/1994 → 06/1996		55	24	063534699820	**MAN2011**
33.422 DFS	D 2866 LF06, D 2866 LF09	309	01/1994 → 06/1996		55	24	063534699820	**MAN2011**
33.502 DF	D 2840 LF01, D 2840 LF04, D 2840 LF06	368	09/1991 → 06/1996		55	24	063534699820	**MAN2011**
33.502 DFA	D 2840 LF01, D 2840 LF04, D 2840 LF06	368	09/1991 → 06/1996		55	24	063534699820	**MAN2011**
35.262 VF	D 2865 LF/260	191	02/1989 → 02/1990		55	24	063534699820	**MAN2011**
35.262 VFA	D 2865 LF/260	191	07/1989 → 02/1990		55	24	063534699820	**MAN2011**
35.262 VFK	D 2865 LF/260	191	02/1989 → 02/1990		55	24	063534699820	**MAN2011**
35.272 VF	D 2865 LF02	198	02/1990 → 12/1991		55	24	063534699820	**MAN2011**
35.272 VFK	D 2865 LF02	198	02/1990 → 12/1991		55	24	063534699820	**MAN2011**
35.292 VF	D 2866 LFZ/290	213	10/1988 → 04/1995		55	24	063534699820	**MAN2011**
35.292 VFK	D 2866 LFZ/290	213	10/1988 → 04/1995		55	24	063534699820	**MAN2011**
35.302 VF	D 2866 LF04	220	05/1990 → 09/1991		55	24	063534699820	**MAN2011**
35.302 VFA	D 2866 LF04	220	05/1990 → 09/1991		55	24	063534699820	**MAN2011**
35.302 VFAK	D 2866 LF04	220	05/1990 → 09/1991		55	24	063534699820	**MAN2011**
35.302 VFK	D 2866 LF04	220	05/1990 → 09/1991		55	24	063534699820	**MAN2011**
35.322 VFAK	D 2865 LF03, D 2865 LF06	235	02/1990 → 06/1996		55	24	063534699820	**MAN2011**
35.322 VFK	D 2865 LF03, D 2865 LF06	235	10/1992 → 06/1996		55	24	063534699820	**MAN2011**

		kW ÷ kW		i	A	V	LONG	SHORT
MAN								
F 90								
35.322 VK	D 2865 LF03, D 2865 LF06	235	02/1990 → 05/1994		55	24	063534699820	**MAN2011**
35.332 VF	D 2866 LFZ/330	243	10/1988 → 04/1995		55	24	063534699820	**MAN2011**
35.332 VFK	D 2866 LFZ/330	243	10/1988 → 04/1995		55	24	063534699820	**MAN2011**
35.342 VF	D 2865 LF09	250	05/1994 → 06/1996		55	24	063534699820	**MAN2011**
35.342 VFK	D 2865 LF09	250	05/1994 → 06/1996		55	24	063534699820	**MAN2011**
35.372 VF	D 2866 LF03, D 2866 LF05, D 2866 LF15	272	02/1990 → 04/1992		55	24	063534699820	**MAN2011**
35.372 VFK	D 2866 LF03, D 2866 LF05, D 2866 LF15	272	02/1990 → 04/1992		55	24	063534699820	**MAN2011**
35.422 VF	D 2866 LF06, D 2866 LF09	309	02/1990 → 04/1992		55	24	063534699820	**MAN2011**
35.422 VFK	D 2866 LF06, D 2866 LF09	309	02/1990 → 04/1992		55	24	063534699820	**MAN2011**
40.372 DF	D 2866 LF03, D 2866 LF05, D 2866 LF15	272	12/1991 → 04/1992		55	24	063534699820	**MAN2011**
40.372 DFA	D 2866 LF03, D 2866 LF05, D 2866 LF15	272	12/1991 → 04/1992		55	24	063534699820	**MAN2011**
40.422 DF	D 2866 LF06, D 2866 LF09	309	12/1991 → 04/1992		55	24	063534699820	**MAN2011**
40.422 DFA	D 2866 LF06, D 2866 LF09	309	12/1991 → 04/1992		55	24	063534699820	**MAN2011**
40.502 DFA	D 2840 LF01, D 2840 LF04, D 2840 LF06	368	02/1990 → 06/1996		55	24	063534699820	**MAN2011**
41.262 VF	D 2865 LF/260	191	07/1989 → 02/1990		55	24	063534699820	**MAN2011**
41.262 VFK	D 2865 LF/260	191	07/1989 → 02/1990		55	24	063534699820	**MAN2011**
41.272 VF	D 2865 LF02	198	02/1990 → 12/1991		55	24	063534699820	**MAN2011**
41.292 VF	D 2866 LF/290	213	10/1988 → 02/1990		55	24	063534699820	**MAN2011**
41.292 VFK	D 2866 LF/290	213	10/1988 → 02/1990		55	24	063534699820	**MAN2011**
41.322 VF	D 2865 LF03, D 2865 LF06	235	02/1990 → 06/1996		55	24	063534699820	**MAN2011**
41.332 VF	D 2866 LF/330	243	10/1988 → 02/1990		55	24	063534699820	**MAN2011**
41.332 VFK	D 2866 LF/330	243	10/1988 → 02/1990		55	24	063534699820	**MAN2011**
41.342 VF	D 2865 LF09	250	05/1994 → 06/1996		55	24	063534699820	**MAN2011**
41.362 VF	D 2866 LXF	265	10/1988 → 02/1990		55	24	063534699820	**MAN2011**
41.362 VFK	D 2866 LXF	265	10/1988 → 02/1990		55	24	063534699820	**MAN2011**
41.372 VF	D 2866 LF03, D 2866 LF05, D 2866 LF15	272	10/1992 → 05/1994		55	24	063534699820	**MAN2011**

		kW ÷ kW		i	A	V	LONG	SHORT
MAN								
F 90								
41.402 VF	D 2866 LF16	294	05/1994 → 06/1996		55	24	063534699820	**MAN2011**
41.422 VF	D 2866 LF06, D 2866 LF09	309	02/1990 → 06/1996		55	24	063534699820	**MAN2011**
48.292 VFAK	D 2866 LF/290	213	07/1989 → 02/1990		55	24	063534699820	**MAN2011**
F 90 Unterflur								
19.322 U,19.322 ULL	D 2865 LF03, D 2865 LF06	235	02/1990 → 05/1994		55	24	063534699820	**MAN2011**
19.332 U,19.322 ULL	D 2866 LUL/330	243	07/1986 → 02/1990		55	24	063534699820	**MAN2011**
19.362 U,19.362 ULL	D 2866 KUL	265	07/1986 → 01/1991		55	24	063534699820	**MAN2011**
19.372 U,19.372 ULL	D 2866 LF03, D 2866 LF05	272	02/1990 → 05/1994		55	24	063534699820	**MAN2011**
19.422 U,19.422 ULL	D 2866 LF06, D 2866 LF09	309	02/1990 → 05/1994		55	24	063534699820	**MAN2011**
24.322 UNL,24.322 UNLL	D 2865 LF03	235	02/1990 → 12/1990		55	24	063534699820	**MAN2011**
24.332 UNL,24.332 UNLL	D 2866 LUL/330	243	10/1986 → 02/1990		55	24	063534699820	**MAN2011**
24.362 UNL,24.362 UNLL	D 2866 KUL	265	10/1986 → 02/1990		55	24	063534699820	**MAN2011**
24.372 UNL,24.372 UNLL	D 2866 LF03	272	02/1990 → 12/1990		55	24	063534699820	**MAN2011**
24.422 UNL,24.422 UNLL	D 2866 LF06	309	02/1990 → 12/1990		55	24	063534699820	**MAN2011**
25.322 UNL,25.322 UNLL	D 2865 LF03, D 2865 LF06	235	09/1990 → 12/1992		55	24	063534699820	**MAN2011**
25.372 UNL,25.372 UNLL	D 2866 LF03, D 2866 LF05	272	09/1990 → 04/1992		55	24	063534699820	**MAN2011**
25.422 UNL,25.422 UNLL	D 2866 LF06, D 2866 LF09	309	09/1990 → 12/1992		55	24	063534699820	**MAN2011**
26.322 UNL,26.322 UNLL	D 2865 LF03, D 2865 LF06	235	09/1990 → 04/1992		55	24	063534699820	**MAN2011**
26.372 UNL,26.372 UNLL	D 2866 LF03, D 2866 LF05	272	09/1990 → 04/1992		55	24	063534699820	**MAN2011**
26.422 UNL,26.422 UNLL	D 2866 LF06, D 2866 LF09	309	09/1990 → 04/1992		55	24	063534699820	**MAN2011**
G 90								
10.150 F,10.150 FL	D 0826 GF01, D 0826 GF03	110 114	10/1992 → 10/1993		55	24	063534699820	**MAN2011**
10.150 FK	D 0826 GF01, D 0826 GF03	110 114	10/1992 → 10/1993		55	24	063534699820	**MAN2011**
8.150 F,8.150 FL	D 0226 MF	92	10/1992 → 10/1993		55	24	063534699820	**MAN2011**
8.150 F,8.150 FL	D 0826 GF, D 0826 GF03	110 114	10/1992 → 10/1993		55	24	063534699820	**MAN2011**
8.150 FAE	D 0826 GF, D 0826 GF03	110 114	10/1992 → 05/1995		55	24	063534699820	**MAN2011**

		kW ÷ kW			A	V	LONG	SHORT
MAN								
G 90								
8.150 FAKO	D 0826 GF03	110	10/1992 → 05/1995		55	24	063534699820	**MAN2011**
8.150 FK	D 0826 GF, D 0826 GF03	110 114	10/1992 → 10/1993		55	24	063534699820	**MAN2011**
8.150 FOC	D 0826 GF01, D 0826 GF03	110 114	10/1992 → 10/1993		55	24	063534699820	**MAN2011**
8.150 FS,8.150 FLS	D 0826 GF, D 0826 GF03	110 114	09/1987 → 10/1993		55	24	063534699820	**MAN2011**
9.150 F,9.150 FL	D 0826 GF, D 0826 GF03	110 114	10/1992 → 10/1993		55	24	063534699820	**MAN2011**
9.150 FAE	D 0826 GF, D 0826 GF03	110 114	05/1988 → 05/1992		55	24	063534699820	**MAN2011**
9.150 FAKO	D 0826 GF03	110	10/1992 → 05/1995		55	24	063534699820	**MAN2011**
9.150 FK	D 0826 GF, D 0826 GF03	110 114	10/1992 → 10/1993		55	24	063534699820	**MAN2011**
9.150 FOC	D 0826 GF01, D 0826 GF03	110 114	10/1992 → 10/1993		55	24	063534699820	**MAN2011**
9.150 FS,9.150 FLS	D 0826 GF, D 0826 GF03	110 114	10/1992 → 10/1993		55	24	063534699820	**MAN2011**
L 2000								
10.145 LC,10.145 LLC, LRC, LLRC (LE140C)	D 0834 LFL 02	103	07/2001 → 12/2005		100	24	063535255010	**MAN2026**
10.145 LK, LRK, L-KI, LR-KI (LE140C)	D 0834 LFL 02	103	07/2001 → 06/2002		100	24	063535255010	**MAN2026**
10.145 LLS, LLRS (LE140C)	D 0834 LFL 02	103	07/2001 → 06/2002		100	24	063535255010	**MAN2026**
10.150 FOC	D 0824 LFO	114 118	02/1995 → 01/1996		55	24	063534699820	**MAN2011**
10.153 LAEK	D 0824 LFL 01, D 0824 LFL 05	114	10/1993 → 06/1996		55	24	063534699820	**MAN2011**
10.153 LC,10.153 LLC	D 0824 LFL 01, D 0824 LFL 05	114	10/1993 → 06/1996		55	24	063534699820	**MAN2011**
10.153 LK	D 0824 LFL 01, D 0824 LFL 05	114	10/1993 → 06/1996		55	24	063534699820	**MAN2011**
10.153 LLS	D 0824 LFL 01, D 0824 LFL 05	114	01/1995 → 06/1996		55	24	063534699820	**MAN2011**
10.163 LAC, LAEC, LARC, LAERC	D 0824 LFL 02, D 0824 LFL 06, D 0824 LFL 09	114 118	05/1994 → 09/2006		55	24	063534699820	**MAN2011**
10.163 LAK, LAEK, LARK, LAERK	D 0824 LFL 02, D 0824 LFL 06, D 0824 LFL 09	114 118	01/1995 → 09/2006		55	24	063534699820	**MAN2011**
10.163 LC,10.163 LLC	D 0824 LFL 02, D 0824 LFL 06, D 0824 LFL 09	114 118	05/1994 → 01/2001		55	24	063534699820	**MAN2011**
10.163 LC,10.163 LLC, LRC, LLRC (LE160C)	D 0824 LFL 09	114	09/2000 → 09/2001		55	24	063534699820	**MAN2011**
10.163 LK, LRK, L-KI, LR-KI	D 0824 LFL 02, D 0824 LFL 06, D 0824 LFL 09	114 118	01/1995 → 09/2006		55	24	063534699820	**MAN2011**

		kW ÷ kW		i	A	V	MAGNETI MARELLI LONG	MAGNETI MARELLI SHORT
MAN								
L 2000								
10.163 LLS, LLRS	D 0824 LFL 02, D 0824 LFL 06, D 0824 LFL 09	114 118	05/1994 → 09/2001		55	24	063534699820	**MAN2011**
10.185 LAC, LAEC, LARC, LAERC, LA-LA, LAE-LF (LE180C)	D 0834 LFL 03	132	09/2000 → 08/2002		100	24	063535255010	**MAN2026**
10.185 LAK, LAEK, LARK, LAERK (LE180C)	D 0834 LFL 03	132	09/2000 → 08/2002		100	24	063535255010	**MAN2026**
10.185 LC,10.185 LLC, LRC, LLRC (LE180C)	D 0834 LFL 03	132	09/2000 → 08/2002		100	24	063535255010	**MAN2026**
10.185 LK, LRK, L-KI, LR-KI (LE180C)	D 0834 LFL 03	132	07/2001 → 08/2002		100	24	063535255010	**MAN2026**
10.185 LLS, LLRS (LE180C)	D 0834 LFL 03	132	07/2001 → 08/2002		100	24	063535255010	**MAN2026**
10.220 FOC,10.220 FOCL	D 0826 LFL03	162	02/1995 → 09/2001		55	24	063534699820	**MAN2011**
10.223 LAEC	D 0826 LFL06	162	01/1995 → 06/1996		55	24	063534699820	**MAN2011**
10.223 LC,10.223 LLC	D 0826 LFL02, D 0826 LFL06	162 169	05/1994 → 06/1996		55	24	063534699820	**MAN2011**
10.223 LK	D 0826 LFL02, D 0826 LFL06	162 169	05/1994 → 06/1996		55	24	063534699820	**MAN2011**
10.223 LLS	D 0826 LFL02, D 0826 LFL06	162 169	05/1994 → 06/1996		55	24	063534699820	**MAN2011**
10.224 LAC, LAEC, LARC, LAERC	D 0826 LFL03, D 0826 LFL10	162	01/1995 → 09/2001		55	24	063534699820	**MAN2011**
10.224 LAK, LAEK, LARK, LAERK	D 0826 LFL03	162	01/1995 → 09/2001		55	24	063534699820	**MAN2011**
10.224 LC,10.224 LLC, LRC, LLRC	D 0826 LFL03, D 0826 LFL10	162	05/1994 → 09/2001		55	24	063534699820	**MAN2011**
10.224 LK, LRK, L-KI, LR-KI	D 0826 LFL03	162	05/1994 → 09/2001		55	24	063534699820	**MAN2011**
10.224 LLS, LLRS	D 0826 LFL03	162	05/1994 → 09/2001		55	24	063534699820	**MAN2011**
10.225 LAC, LAEC, LARC, LAERC, LA-LF, LAE-LF (LE220C)	D 0836 LFL 02	162	09/2000 → 09/2001		55	24	063534699820	**MAN2011**
10.225 LAC, LAEC, LARC, LAERC, LA-LF, LAE-LF (LE220C)	D 0836 LFL 02	162	07/2001 → 08/2002		100	24	063535255010	**MAN2026**
10.225 LAK, LAEK, LARK, LAERK (LE220C)	D 0836 LFL 02	162	07/2001 → 08/2002		100	24	063535255010	**MAN2026**
10.225 LC, 10.225 LLC, LRC, LLRC	D 0836 LFL 02	162	07/2001 → 12/2006		100	24	063535255010	**MAN2026**
10.225 LC, 10.225 LLC, LRC, LLRC (LE220C)	D 0836 LFL 02	162	07/2001 → 08/2002		100	24	063535255010	**MAN2026**
10.225 LK, LRK , L-KI, LR-KI(LE220C)	D 0836 LFL 02	162	07/2001 → 08/2002		100	24	063535255010	**MAN2026**

		kW ÷ kW			A	V	LONG	SHORT
MAN								
L 2000								
10.225 LLS, LLRS (LE220C)	D 0836 LFL 02	162	07/2001 → 08/2002		100	24	063535255010	**MAN2026**
12.185 LC, LLC	D 0834 LFL 03	132	07/2001 → 12/2005		100	24	063535255010	**MAN2026**
12.225 LC, LLC (LE220C)	D 0836 LFL 02	162	07/2001 → 06/2006		100	24	063535255010	**MAN2026**
8.103 LC, 8.103 LLC	D 0824 FL 01	75	10/1993 → 06/1996		55	24	063534699820	**MAN2011**
8.103 LK	D 0824 FL 01	75	10/1993 → 06/1996		55	24	063534699820	**MAN2011**
8.113 LC, 8.113 LLC	D 0824 LFL 04	81	08/1995 → 09/2001		55	24	063534699820	**MAN2011**
8.113 LK, LRK, L-KI, LR-KI	D 0824 LFL 04	81	08/1995 → 09/2001		55	24	063534699820	**MAN2011**
8.145 LC,8.145 LLC, L-LF (LE140C)	D 0834 LFL 02	103	09/2002 → 08/2004		100	24	063535255010	**MAN2026**
8.145 LLS, LLRS (LE140C)	D 0834 LFL 02	103	09/2002 → 08/2004		100	24	063535255010	**MAN2026**
8.145 LRK, L-KI, LR-KILK (LE140C)	D 0834 LFL 02	103	07/2001 → 08/2002		100	24	063535255010	**MAN2026**
8.150 FOC,8.150 FOCL	D 0824 LFO	114 118	02/1995 → 07/1998		55	24	063534699820	**MAN2011**
8.153 LAEC	D 0824 LFL 01, D 0824 LFL 05	114	01/1995 → 08/1995		55	24	063534699820	**MAN2011**
8.153 LAEK	D 0824 LFL 01, D 0824 LFL 05	114	01/1995 → 09/1996		55	24	063534699820	**MAN2011**
8.153 LC,8.153 LLC	D 0824 LFL 01, D 0824 LFL 05	114	01/1995 → 07/1997		55	24	063534699820	**MAN2011**
8.153 LK	D 0824 LFL 01, D 0824 LFL 05	114	01/1995 → 08/1995		55	24	063534699820	**MAN2011**
8.153 LLS	D 0824 LFL 01, D 0824 LFL 05	114	10/1993 → 06/1996		55	24	063534699820	**MAN2011**
8.163 LAC, LAEC, LARC, LAERC, LA-LF, LAE-LF	D 0824 LFL 02, D 0824 LFL 06, D 0824 LFL 09	114 118	01/1995 → 02/2002		55	24	063534699820	**MAN2011**
8.163 LAEC	D 0824 LFL 07	104	08/1995 → 03/1997		55	24	063534699820	**MAN2011**
8.163 LC,8.163 LLC	D 0824 LFL 09	114	09/2000 →		55	24	063534699820	**MAN2011**
8.163 LC,8.163 LLC	D 0824 LFL 02, D 0824 LFL 06, D 0824 LFL 09	114 118	05/1994 → 09/2001		55	24	063534699820	**MAN2011**
8.163 LC,8.163 LLC, LRC, LLRC, L-LF	D 0824 LFL 07	104	08/1995 → 02/2002		55	24	063534699820	**MAN2011**
8.163 LK, LRK, L-KI, LR-KI	D 0824 LFL 02, D 0824 LFL 06, D 0824 LFL 09	114 118	08/1995 → 09/2001		55	24	063534699820	**MAN2011**
8.163 LLS, LLRS	D 0824 LFL 02, D 0824 LFL 06, D 0824 LFL 09	114 118	05/1994 →		55	24	063534699820	**MAN2011**
8.185 LAC, LAEC, LARC, LAERC, LA-LF, LAE-LF (LE180C)	D 0834 LFL 03	132	09/2000 → 08/2002		100	24	063535255010	**MAN2026**

		kW ÷ kW		i	A	V	LONG	SHORT
MAN								
L 2000								
8.185 LAK, LAEK, LARK, LAERK (LE180C)	D 0834 LFL 03	132	07/2001 → 08/2002		100	24	063535255010	**MAN2026**
8.185 LC,8.185 LLC, LRC, LLRC, L-LF (LE180C)	D 0834 LFL 03	132	09/2002 → 12/2005		100	24	063535255010	**MAN2026**
8.185 LK, LRK, L-KI, LR-KI (LE180C)	D 0834 LFL 03	132	09/2000 →		100	24	063535255010	**MAN2026**
8.185 LLS, LLRS (LE180C)	D 0834 LFL 03	132	09/2000 →		100	24	063535255010	**MAN2026**
8.220 FOC,8.220 FOCL	D 0826 LFL03	162	04/1995 → 09/2001		55	24	063534699820	**MAN2011**
8.223 LAEC	D 0826 LFL06	162	01/1995 → 06/1996		55	24	063534699820	**MAN2011**
8.223 LC,8.223 LLC	D 0826 LFL02, D 0826 LFL06	162 169	10/1993 → 06/1996		55	24	063534699820	**MAN2011**
8.223 LK	D 0826 LFL02, D 0826 LFL06	162 169	05/1994 → 01/1995		55	24	063534699820	**MAN2011**
8.223 LLS	D 0826 LFL02, D 0826 LFL06	162 169	05/1994 → 01/1995		55	24	063534699820	**MAN2011**
8.224 LAC, LAEC, LARC, LAERC	D 0826 LFL03	162	01/1995 → 08/2001		55	24	063534699820	**MAN2011**
8.224 LAK, LAEK, LARK, LAERK	D 0826 LFL03	162	01/1995 → 08/2001		55	24	063534699820	**MAN2011**
8.224 LC,8.224 LLC, LRC, LLRC	D 0826 LFL03	162	05/1994 → 01/1995		55	24	063534699820	**MAN2011**
8.224 LK, LRK, L-KI, LR-KI	D 0826 LFL03	162	01/1995 → 03/2001		55	24	063534699820	**MAN2011**
8.224 LLS, LLRS	D 0826 LFL03	162	01/1995 → 09/2001		55	24	063534699820	**MAN2011**
8.225 LAC, LAEC, LARC, LAERC (LE220C)	D 0836 LFL 02	162	07/2001 → 08/2002		100	24	063535255010	**MAN2026**
8.225 LAK, LAEK, LARK, LAERK (LE220C)	D 0836 LFL 02	162	07/2001 → 08/2002		100	24	063535255010	**MAN2026**
8.225 LC,8.225 LLC, LRC, LLRC (LE220C)	D 0826 LFL10, D 0836 LFL 02	162	09/2000 → 08/2001		55	24	063534699820	**MAN2011**
8.225 LC,8.225 LLC, LRC, LLRC (LE220C)	D 0826 LFL10, D 0836 LFL 02	162	07/2001 → 08/2002		100	24	063535255010	**MAN2026**
8.225 LK, LRK, L-KI, LR-KI (LE220C)	D 0836 LFL 02	162	07/2001 → 08/2002		100	24	063535255010	**MAN2026**
8.225 LLS, LLRS (LE220C)	D 0836 LFL 02	162	07/2001 → 08/2002		100	24	063535255010	**MAN2026**
9.145 LC,9.145 LLC, LRC, LLRC (LE140C)	D 0834 LFL 02	103	07/2001 → 08/2002		100	24	063535255010	**MAN2026**
9.145 LK, LRK, L-KI, LR-KI (LE140C)	D 0834 LFL 02	103	07/2001 → 08/2002		100	24	063535255010	**MAN2026**
9.145 LLS, LLRS (LE140C)	D 0834 LFL 02	103	07/2001 → 08/2002		100	24	063535255010	**MAN2026**

		kW ÷ kW		i	A	V	MAGNETI MARELLI LONG	MAGNETI MARELLI SHORT
MAN								
L 2000								
9.153 LC,9.153 LLC	D 0824 LFL 01, D 0824 LFL 05	114	01/1995 → 08/1995		55	24	063534699820	**MAN2011**
9.153 LK	D 0824 LFL 01, D 0824 LFL 05	114	08/1995 → 06/1996		55	24	063534699820	**MAN2011**
9.153 LLS	D 0824 LFL 01, D 0824 LFL 05	114	01/1995 → 12/1995		55	24	063534699820	**MAN2011**
9.163 LC	D 0824 LFL 07	104	08/1995 → 03/1997		55	24	063534699820	**MAN2011**
9.163 LC,9.163 LLC, LRC, LLRC	D 0824 LFL 02, D 0824 LFL 06, D 0824 LFL 09	114 118	05/1994 → 09/2001		55	24	063534699820	**MAN2011**
9.163 LK	D 0824 LFL 07	104	08/1995 → 03/1997		55	24	063534699820	**MAN2011**
9.163 LK, LRK, L-KI, LR-KI	D 0824 LFL 02, D 0824 LFL 06, D 0824 LFL 09	114 118	01/1995 → 08/1995		55	24	063534699820	**MAN2011**
9.163 LLS, LLRS	D 0824 LFL 02, D 0824 LFL 06, D 0824 LFL 09	114 118	05/1994 → 03/2001		55	24	063534699820	**MAN2011**
9.185 LC,9.185 LLC, LRC, LLRC (LE180C)	D 0834 LFL 03	132	09/2000 → 06/2005		100	24	063535255010	**MAN2026**
9.185 LK, LRK, L-KI, LR-KI (LE180C)	D 0834 LFL 03	132	07/2001 → 06/2005		100	24	063535255010	**MAN2026**
9.185 LLS, LLRS (LE 180C)	D 0834 LFL 03	132	07/2001 → 06/2005		100	24	063535255010	**MAN2026**
9.223 LC,9.223 LLC	D 0826 LFL02, D 0826 LFL06	162 169	05/1994 → 06/1996		55	24	063534699820	**MAN2011**
9.223 LK	D 0826 LFL02, D 0826 LFL06	162 169	05/1994 → 06/1996		55	24	063534699820	**MAN2011**
9.223 LLS	D 0826 LFL02, D 0826 LFL06	162 169	05/1994 → 06/1996		55	24	063534699820	**MAN2011**
9.224 LC,9.224 LLC, LRC, LLRC	D 0826 LFL03	162	05/1994 → 09/2001		55	24	063534699820	**MAN2011**
9.224 LK, LRK, L-KI, LR-KI	D 0826 LFL03	162	05/1994 → 09/2001		55	24	063534699820	**MAN2011**
9.224 LLS, LLRS	D 0826 LFL03	162	05/1994 → 03/2001		55	24	063534699820	**MAN2011**
9.225 LC,9.225 LLC, LRC, LLRC (LE220C)	D 0836 LFL 02	162	07/2001 → 06/2005		100	24	063535255010	**MAN2026**
9.225 LK, LRK, L-KI, LR-KI (LE220C)	D 0836 LFL 02	162	07/2001 → 06/2005		100	24	063535255010	**MAN2026**
9.225 LLS, LLRS (LE220C)	D 0836 LFL 02	162	07/2001 → 06/2005		100	24	063535255010	**MAN2026**
LION S COACH								
RH 413	D 2866 LOH 29	301	09/2002 → 09/2006		100	24	063535255010	**MAN2026**
RH 463	D 2876 LOH 01, D 2876 LOH 02, D 2876 LOH 03	338	09/2002 → 09/2006		100	24	063535255010	**MAN2026**

		kW ÷ kW		i	A	V	LONG	SHORT
MAN								
LION S COACH								
RHC 414	D 2866 LOH 34	301	09/2002 → 09/2006		100	24	063535255010	**MAN2026**
LION S STAR								
RH 414	D 2876 LOH 03	338	10/2001 → 09/2006		100	24	063535255010	**MAN2026**
RH 464, RHS 464	D 2876 LOH 03	338	01/2002 → 09/2006		100	24	063535255010	**MAN2026**
RH 464, RHS 464	D 2866 LOH 34	301	10/2001 → 09/2006		100	24	063535255010	**MAN2026**
RH 464, RHS 464	D 2866 LOH 34	301	01/2002 → 09/2006		100	24	063535255010	**MAN2026**
M 2000 L								
12.163 LC, LLC, LRC, LLRC	D 0824 LFL 06, D 0824 LFL 09	114	08/1995 → 08/2001		55	24	063534699820	**MAN2011**
12.163 LK, LRK	D 0824 LFL 06, D 0824 LFL 09	114	08/1995 → 08/2001		55	24	063534699820	**MAN2011**
12.224 LC, LLC, LRC, LLRC	D 0826 LFL03, D 0826 LFL10	162	08/1995 → 09/2001		55	24	063534699820	**MAN2011**
12.224, 12.225, LK, LRK	D 0826 LFL03, D 0826 LFL10	162	08/1995 → 08/2001		55	24	063534699820	**MAN2011**
12.225 LC, LLC, LLLC, LRC, LLRC	D 0836 LFL 02	162	07/2001 → 06/2006		100	24	063535255010	**MAN2026**
12.255 LC, LLC, LLLC		180	09/2002 → 06/2006		100	24	063535255010	**MAN2026**
12.255 LK		180	10/2003 → 06/2006		100	24	063535255010	**MAN2026**
12.285 LC, LLC, LLLC		206	09/2002 → 06/2006		100	24	063535255010	**MAN2026**
12.285 LK		206	10/2003 → 06/2006		100	24	063535255010	**MAN2026**
14.163 LC, LLC, LRC, LLRC	D 0824 LFL 06, D 0824 LFL 09	114	08/1995 → 08/2001		55	24	063534699820	**MAN2011**
14.163 LK, LRK	D 0824 LFL 06, D 0824 LFL 09	114	08/1995 → 08/2001		55	24	063534699820	**MAN2011**
14.224 LAC, LARC	D 0826 LFL03, D 0826 LFL10	162	08/1995 → 09/2001		55	24	063534699820	**MAN2011**
14.224 LAK, LARK	D 0826 LFL03, D 0826 LFL10	162	08/1995 → 09/2001		55	24	063534699820	**MAN2011**
14.224 LC, LLC, LLLC, LRC, LLRC, LLLRC	D 0826 LFL03, D 0826 LFL10	162	08/1995 → 09/2001		55	24	063534699820	**MAN2011**
14.224 LK, LRK	D 0826 LFL03, D 0826 LFL10	162	08/1995 → 09/2001		55	24	063534699820	**MAN2011**
14.224, 14.225, LA-LF		162	07/2003 → 09/2006		100	24	063535255010	**MAN2026**
14.225 LAC, LARC, (LE220B)	D 0836 LFL 02	162	09/2000 → 09/2001		55	24	063534699820	**MAN2011**
14.225 LAC, LARC, (LE220B)	D 0836 LFL 02	162	07/2001 → 08/2002		100	24	063535255010	**MAN2026**
14.225 LAK, LARK, (LE220B)	D 0836 LFL 02	162	07/2001 → 08/2002		100	24	063535255010	**MAN2026**
14.225 LC, LLC, LLLC, LRC, LLRC, LLLRC, (LE220B)	D 0836 LFL 02	162	09/2000 → 09/2001		55	24	063534699820	**MAN2011**
14.225 LC, LLC, LLLC, LRC, LLRC, LLLRC, (LE220B)	D 0836 LFL 02	162	07/2001 → 08/2002		100	24	063535255010	**MAN2026**

		kW ÷ kW		i	A	V	MAGNETI MARELLI LONG	MAGNETI MARELLI SHORT
MAN								
M 2000 L								
14.225 LK, LRK (LE220B)	D 0836 LFL 02	162	09/2002 → 06/2006		100	24	063535255010	**MAN2026**
14.255 LAC, LARC		180	11/2002 → 09/2006		100	24	063535255010	**MAN2026**
14.255 LAK, LARK		180	11/2002 → 09/2006		100	24	063535255010	**MAN2026**
14.255 LA-LF		180	07/2003 → 09/2006		100	24	063535255010	**MAN2026**
14.255 LC, LLC, LLLC, LRC, LLRC, LLLRC, (LE250B)	D 0836 LFL 05	180	07/2001 → 08/2002		100	24	063535255010	**MAN2026**
14.255 LK, LRK		180	11/2002 → 09/2006		100	24	063535255010	**MAN2026**
14.263, 14.264 LAC, LARC	D 0826 LFL09	191	08/1995 → 09/2001		55	24	063534699820	**MAN2011**
14.263, 14.264 LAK, LARK	D 0826 LFL09	191	08/1995 → 09/2001		55	24	063534699820	**MAN2011**
14.263, 14.264 LC, LLC, LLLC, LRC, LLRC, LLLRC	D 0826 LFL09	191	08/1995 → 09/2001		55	24	063534699820	**MAN2011**
14.263, 14.264 LK, LRK	D 0826 LFL09	191	08/1995 → 09/2001		55	24	063534699820	**MAN2011**
14.284 LC, LLC, LLLC, LRC, LLRC, LLLRC	D 0836 LF 01	206	10/1998 → 09/2001		100	24	063535255010	**MAN2026**
14.284, 14.285, LAC, LARC	D 0836 LF 01	206	06/1998 → 09/2001		100	24	063535255010	**MAN2026**
14.284, 14.285, LAK, LARK	D 0836 LF 01	206	06/1998 → 09/2001		100	24	063535255010	**MAN2026**
14.284, 14.285, LA-LF	D 0836 LF 01	206	06/1998 → 09/2001		100	24	063535255010	**MAN2026**
14.284, 14.285, LK, LRK	D 0836 LF 01	206	10/1998 → 09/2001		100	24	063535255010	**MAN2026**
15.163 LC, LLC, LRC	D 0824 LFL 06, D 0824 LFL 09	114	08/1995 → 09/2001		55	24	063534699820	**MAN2011**
15.163 LK, LRK	D 0824 LFL 06, D 0824 LFL 09	114	08/1995 → 09/2001		55	24	063534699820	**MAN2011**
15.224 LC, LLC, LLLC, LRC, LLRC, LLLRC	D 0826 LFL03, D 0826 LFL10	162	08/1995 → 09/2001		55	24	063534699820	**MAN2011**
15.224 LK, LRK	D 0826 LFL03, D 0826 LFL10	162	08/1995 → 09/2001		55	24	063534699820	**MAN2011**
15.225 LC, LLC, LLLC, LRC, LLRC, LLLRC, (LE220B)	D 0836 LFL 02	162	09/2000 → 09/2001		55	24	063534699820	**MAN2011**
15.225 LC, LLC, LLLC, LRC, LLRC, LLLRC, (LE220B)	D 0836 LFL 02	162	09/2002 → 09/2006		100	24	063535255010	**MAN2026**
15.225 LK, LRK, (LE220B)	D 0836 LFL 02	162	09/2000 → 09/2001		55	24	063534699820	**MAN2011**
15.225 LK, LRK, (LE220B)	D 0836 LFL 02	162	09/2002 → 09/2006		100	24	063535255010	**MAN2026**

		kW ÷ kW		i	A	V	MAGNETI MARELLI LONG	MAGNETI MARELLI SHORT
MAN								
M 2000 L								
15.255 LC, LLC, LLLC, LRC, LLRC, LLLRC, (LE250B)	D 0836 LFL 05	180	07/2001 → 08/2002		100	24	063535255010	**MAN2026**
15.255 LK, LRK, (LE250B)	D 0836 LFL 05	180	07/2001 → 08/2002		100	24	063535255010	**MAN2026**
15.263, 15.264 LC, LLC, LLLC, LRC, LLRC, LLLRC	D 0826 LFL09	191	09/2000 → 09/2001		55	24	063534699820	**MAN2011**
15.263, 15.264 LK, LRK	D 0826 LFL09	191	08/1995 → 09/2001		55	24	063534699820	**MAN2011**
15.284 LC, LLC, LLLC, LRC, LLRC, LLLRC	D 0836 LF 01	206	06/1998 → 09/2001		100	24	063535255010	**MAN2026**
15.284 LK, LRK	D 0836 LF 01	206	06/1998 → 09/2001		100	24	063535255010	**MAN2026**
15.285 LC, LLC, LLLC, LRC, LLRC, LLLRC, (LE280B)	D 0836 LFL 03	206	09/2000 → 09/2001		100	24	063535255010	**MAN2026**
15.285 LK, LRK, (LE280B)	D 0836 LFL 03	206	09/2000 → 09/2001		100	24	063535255010	**MAN2026**
18.224, 18.225, LAC, LARC	D 0826 LFL03, D 0826 LFL10, D 0836 LFL 02	162	08/1995 → 09/2001		55	24	063534699820	**MAN2011**
18.224, 18.225, LAK, LARK	D 0826 LFL03, D 0826 LFL10	162	08/1995 → 09/2001		55	24	063534699820	**MAN2011**
18.224, 18.225, LC, LLC, LLLC, LRC, LLRC, LLLRC	D 0826 LFL03, D 0826 LFL10, D 0836 LFL 02	162	08/1995 → 09/2001		55	24	063534699820	**MAN2011**
18.224, 18.225, LK, LLK, LRK, LLRK	D 0826 LFL03, D 0826 LFL10	162	08/1995 → 09/2001		55	24	063534699820	**MAN2011**
18.224, 18.225, L-KO, LR-KO		162	05/2001 → 09/2001		55	24	063534699820	**MAN2011**
18.224, 18.225, L-KO, LR-KO		162	07/2001 → 09/2006		100	24	063535255010	**MAN2026**
18.255 LAC, LARC	D 0836 LFL 05	180	07/2001 → 09/2006		100	24	063535255010	**MAN2026**
18.255 LAK, LARK		180	07/2001 → 09/2006		100	24	063535255010	**MAN2026**
18.255 LC, LLC, LLLC, LRC, LLRC, LLLRC, (LE250B)	D 0836 LFL 05	180	09/2000 → 09/2002		100	24	063535255010	**MAN2026**
18.255 LK, LLK, LRK, LLRK		180	11/2002 → 09/2006		100	24	063535255010	**MAN2026**
18.255 L-KO, LR-KO		180	07/2001 → 09/2006		100	24	063535255010	**MAN2026**
18.263, 18.264, LAC, LARC	D 0826 LFL09	191	08/1995 → 09/2001		55	24	063534699820	**MAN2011**
18.263, 18.264, LAK, LARK	D 0826 LFL09	191	08/1995 → 09/2001		55	24	063534699820	**MAN2011**
18.263, 18.264, LC, LLC, LLLC, LRC, LLRC, LLLRC	D 0826 LFL09	191	08/1995 → 09/2001		55	24	063534699820	**MAN2011**

		kW ÷ kW		i	A	V	LONG	SHORT
MAN								
M 2000 L								
18.263, 18.264, LK, LLK, LRK, LLRK	D 0826 LFL09	191	08/1995 → 09/2001		55	24	063534699820	**MAN2011**
18.284 LAC, LARC	D 0836 LF 01	206	06/1998 → 09/2001		100	24	063535255010	**MAN2026**
18.284 LAK, LARK	D 0836 LF 01	206	06/1998 → 09/2001		100	24	063535255010	**MAN2026**
18.284 LC, LLC, LLLC, LRC, LLRC, LLLRC	D 0836 LF 01	206	06/1998 → 09/2001		100	24	063535255010	**MAN2026**
18.284, 18.285, LK, LLK, LRK, LLRK	D 0836 LF 01	206	06/1998 → 09/2001		100	24	063535255010	**MAN2026**
18.284, 18.285, L-KO, LR-KO	D 0836 LF 01	206	06/1998 → 09/2001		100	24	063535255010	**MAN2026**
18.285 LAC, LARC (LE280B)	D 0836 LFL 03	206	07/2001 → 09/2006		100	24	063535255010	**MAN2026**
18.285 LAK, LARK, (LE280B)	D 0836 LFL 03	206	07/2001 → 09/2006		100	24	063535255010	**MAN2026**
18.285 LC, LLC, LLLC, LRC, LLRC, LLLRC, (LE280B)	D 0836 LFL 03	206	09/1999 → 09/2001		100	24	063535255010	**MAN2026**
20.224 LNLC, LNLLC		162	05/2001 → 09/2001		55	24	063534699820	**MAN2011**
20.224 LNLC, LNLLC		162	07/2001 → 09/2006		100	24	063535255010	**MAN2026**
20.255 LNLC, LNLLC		180	07/2001 → 09/2006		100	24	063535255010	**MAN2026**
20.284, 20.285, LNLC, LNLLC		206	05/2001 → 09/2006		100	24	063535255010	**MAN2026**
26.284 DL-TM, DLR-TM		206	05/2001 → 12/2002		100	24	063535255010	**MAN2026**
26.284, 26.285, DL-HK, DLR-HK		206	11/2002 → 12/2002		100	24	063535255010	**MAN2026**
M 2000 M								
12.224 MLS		162	02/2003 → 07/2005		100	24	063535255010	**MAN2026**
12.255 MLS		180	02/2003 → 07/2005		100	24	063535255010	**MAN2026**
12.284 MLS		206	09/2002 → 07/2005		100	24	063535255010	**MAN2026**
14.224 MAK	D 0826 LF15, D 0826 LF18	162	08/1995 → 09/2001		55	24	063534699820	**MAN2011**
14.224 MC, MLC, MLLC	D 0826 LF10, D 0826 LF15, D 0826 LF18	162	08/1995 → 09/2001		55	24	063534699820	**MAN2011**
14.224 MK	D 0826 LF15, D 0826 LF18	162	08/1995 → 09/2001		55	24	063534699820	**MAN2011**
14.224 MLS, MLRS	D 0826 LF15, D 0826 LF18	162	08/1995 → 09/2001		55	24	063534699820	**MAN2011**
14.225 MC, MLC, MLLC	D 0836 LF 02, D 0836 LF 04	162	10/2000 → 07/2005		100	24	063535255010	**MAN2026**
14.225 MLS, MLRS	D 0836 LF 04	162	02/2003 → 07/2005		100	24	063535255010	**MAN2026**
14.255 MAK		180	11/2002 → 07/2005		100	24	063535255010	**MAN2026**
14.255 MC, MLC, MLLC	D 0836 LF 05	180	09/2002 → 07/2005		100	24	063535255010	**MAN2026**
14.255 MLS, MLRS	D 0836 LF 05	180	01/2001 → 09/2006		100	24	063535255010	**MAN2026**

		kW ÷ kW		i	A	V	MAGNETI MARELLI LONG	MAGNETI MARELLI SHORT
MAN								
M 2000 M								
14.264 MC, MLC, MLLC	D 0826 LF17	191	08/1995 → 09/2001		55	24	063534699820	**MAN2011**
14.264 MLS, MLRS	D 0826 LF17	191	08/1995 → 09/2001		55	24	063534699820	**MAN2011**
14.284 MAK	D 0836 LF 01	206	06/1998 → 09/2001		100	24	063535255010	**MAN2026**
14.284 MA-KO, MA-LF	D 0836 LF 01	206	06/1998 → 09/2001		100	24	063535255010	**MAN2026**
14.284 MC, MLC, MLLC	D 0836 LF 01	206	06/1998 → 09/2001		100	24	063535255010	**MAN2026**
14.284 MLS, MLRS	D 0836 LF 01	206	06/1998 → 09/2001		100	24	063535255010	**MAN2026**
14.285 MLC, MLLC (ME280C)	D 0836 LFL 03	206	07/2001 → 08/2002		100	24	063535255010	**MAN2026**
18.224 MAC, MARC	D 0826 LF15, D 0826 LF18	162	08/1995 → 09/2001		55	24	063534699820	**MAN2011**
18.224 MAK, MARK	D 0826 LF15, D 0826 LF18	162	08/1995 → 09/2001		55	24	063534699820	**MAN2011**
18.224 MC, MLC, MLLC, MRC, MLRC, MLLRC	D 0826 LF15, D 0826 LF18	162	08/1995 → 09/2001		55	24	063534699820	**MAN2011**
18.224 MK,18.224 MLK, MRK, MLRK	D 0826 LF15, D 0826 LF18	162	08/1995 → 09/2001		55	24	063534699820	**MAN2011**
18.224 MLS, MLRS	D 0826 LF15, D 0826 LF18	162	08/1995 → 09/2001		55	24	063534699820	**MAN2011**
18.225 MAC, MARC	D 0836 LF 04	162	02/2003 → 07/2005		100	24	063535255010	**MAN2026**
18.225 MC, MLC, MLLC, MRC, MLRC, MLLRC	D 0836 LF 04	162	10/2000 → 07/2005		100	24	063535255010	**MAN2026**
18.255 MAK, MARK		180	07/2001 → 07/2005		100	24	063535255010	**MAN2026**
18.255 MK, MLK, MRK, MLRK		180	11/2002 → 07/2005		100	24	063535255010	**MAN2026**
18.255 MLS, MLRS	D 0836 LF 05	180	01/2001 → 09/2006		100	24	063535255010	**MAN2026**
18.264 MAC, MARC	D 0826 LF17	191	08/1995 → 09/2001		55	24	063534699820	**MAN2011**
18.264 MAK, MARK	D 0826 LF17	191	08/1995 → 09/2001		55	24	063534699820	**MAN2011**
18.264 MC, MLC, MLLC, MRC, MLRC, MLLRC	D 0826 LF17	191	08/1995 → 09/2001		55	24	063534699820	**MAN2011**
18.264 MK,18.264 MLK, MRK, MLRK	D 0826 LF17	191	08/1995 → 09/2001		55	24	063534699820	**MAN2011**
18.264 MLS, MLRS	D 0826 LF17	191	08/1995 → 09/2001		55	24	063534699820	**MAN2011**
18.284 MAC, MARC	D 0836 LF 01	206	06/1998 → 09/2001		100	24	063535255010	**MAN2026**
18.284 MAK, MARK	D 0836 LF 01	206	06/1998 → 09/2001		100	24	063535255010	**MAN2026**
18.284 MC, MLC, MLLC, MRC, MLRC, LLRC	D 0836 LF 01	206	06/1998 → 09/2001		100	24	063535255010	**MAN2026**
18.284 MK,18.284 MLK, MRK, MLRK	D 0836 LF 01	206	06/1998 → 09/2001		100	24	063535255010	**MAN2026**
18.284 MLS, MLRS	D 0836 LF 01	206	06/1998 → 09/2001		100	24	063535255010	**MAN2026**
25.224 MNLC, MNLLC, MNLRC, MNLLRC, MVLC	D 0826 LF15, D 0826 LF18, D 0826 LFL10	162	08/1995 → 09/2001		55	24	063534699820	**MAN2011**

		kW ÷ kW		i	A	V	MAGNETI MARELLI LONG	MAGNETI MARELLI SHORT
MAN								
M 2000 M								
25.264 MNLC, MNLLC, MNLRC, MNLLRC, MVLC	D 0826 LF17	191	08/1995 → 09/2001		55	24	063534699820	**MAN2011**
25.285 MNLC, MNLLC, MNLRC, MNLLRC, MVLC	D 0836 LF 03, D 0836 LFL 03	206	02/2003 → 07/2005		100	24	063535255010	**MAN2026**
M 90								
12.152 F,12.152 FL	D 0826 F01, D 0826 F02	110 114	12/1988 → 05/1994		55	24	063534699820	**MAN2011**
12.152 FK	D 0826 F01, D 0826 F02	110 114	12/1988 → 05/1994		55	24	063534699820	**MAN2011**
12.152 FS,12.152 FLS	D 0826 F01, D 0826 F02	110 114	12/1988 → 05/1994		55	24	063534699820	**MAN2011**
12.192 F,12.192 FL	D 0826 LF01, D 0826 LF05, D 0826 LF07	140	07/1990 → 06/1996		55	24	063534699820	**MAN2011**
12.192 FA	D 0826 LF05, D 0826 LF07	140	10/1992 → 06/1996		55	24	063534699820	**MAN2011**
12.192 FAK	D 0826 LF05, D 0826 LF07	140	10/1992 → 06/1996		55	24	063534699820	**MAN2011**
12.192 FK	D 0826 LF01, D 0826 LF05, D 0826 LF07	140	07/1990 → 06/1996		55	24	063534699820	**MAN2011**
12.192 FS,12.192 FLS	D 0826 LF01, D 0826 LF05, D 0826 LF07	140	07/1990 → 06/1996		55	24	063534699820	**MAN2011**
12.222 F,12.222 FL	D 0826 LF11	162	05/1994 → 06/1996		55	24	063534699820	**MAN2011**
12.222 FA	D 0826 LF11	162	05/1994 → 06/1996		55	24	063534699820	**MAN2011**
12.222 FAK	D 0826 LF11	162	05/1994 → 06/1996		55	24	063534699820	**MAN2011**
12.222 FK	D 0826 LF11	162	05/1994 → 06/1996		55	24	063534699820	**MAN2011**
12.222 FLS	D 0826 LF11	162	05/1994 → 06/1996		55	24	063534699820	**MAN2011**
12.232 F,12.232 FL	D 0826 LF02, D 0826 LF06, D 0826 LF08	169	08/1988 → 06/1996		55	24	063534699820	**MAN2011**
12.232 FA	D 0826 LF02, D 0826 LF06, D 0826 LF08	169	05/1990 → 06/1996		55	24	063534699820	**MAN2011**
12.232 FAK	D 0826 LF02, D 0826 LF06, D 0826 LF08	169	05/1990 → 06/1996		55	24	063534699820	**MAN2011**
12.232 FK	D 0826 LF02, D 0826 LF06, D 0826 LF08	169	08/1988 → 06/1996		55	24	063534699820	**MAN2011**
12.232 FS,12.232 FLS	D 0826 LF02, D 0826 LF06, D 0826 LF08	169	08/1988 → 06/1996		55	24	063534699820	**MAN2011**

		kW ÷ kW		i	A	V	LONG	SHORT
MAN								
M 90								
12.262 F,12.262 FL	D 0826 LF13	191	08/1995 → 06/1996		55	24	063534699820	**MAN2011**
12.262 FK	D 0826 LF13	191	08/1995 → 06/1996		55	24	063534699820	**MAN2011**
12.262 FS,12.262 FLS	D 0826 LF13	191	08/1995 → 06/1996		55	24	063534699820	**MAN2011**
12.272 F,12.272 FL	D 2865 LF02	198	09/1991 → 10/1992		55	24	063534699820	**MAN2011**
12.272 F,12.272 FL	D 0826 LF04	198	10/1992 → 06/1996		55	24	063534699820	**MAN2011**
12.272 FA	D 0826 LF04	198	10/1993 → 04/1995		55	24	063534699820	**MAN2011**
12.272 FAK	D 0826 LF04	198	10/1993 → 04/1995		55	24	063534699820	**MAN2011**
12.272 FK	D 0826 LF04	198	10/1992 → 06/1996		55	24	063534699820	**MAN2011**
12.272 FK	D 2865 LF02	198	09/1991 → 10/1992		55	24	063534699820	**MAN2011**
12.272 FS,12.272 FLS	D 0826 LF04	198	10/1992 → 06/1996		55	24	063534699820	**MAN2011**
12.272 FS,12.272 FLS	D 2865 LF02	198	09/1991 → 10/1992		55	24	063534699820	**MAN2011**
14.152 F,14.152 FL	D 0826 F01, D 0826 F02	110 114	12/1988 → 04/1994		55	24	063534699820	**MAN2011**
14.152 F,14.152 FL	D 0824 LF 01	114	05/1994 → 06/1996		55	24	063534699820	**MAN2011**
14.152 FK	D 0826 F01, D 0826 F02	110 114	12/1988 → 05/1994		55	24	063534699820	**MAN2011**
14.152 FK	D 0824 LF 01	114	05/1994 → 06/1996		55	24	063534699820	**MAN2011**
14.152 FS,14.152 FLS	D 0826 F01, D 0826 F02	110 114	12/1988 → 05/1994		55	24	063534699820	**MAN2011**
14.152 FS,14.152 FLS	D 0824 LF 01	114	05/1994 → 06/1996		55	24	063534699820	**MAN2011**
14.162 F,14.162 FL	D 0824 LF 02	118	08/1995 → 06/1996		55	24	063534699820	**MAN2011**
14.162 FK	D 0824 LF 02	118	08/1995 → 06/1996		55	24	063534699820	**MAN2011**
14.162 FS,14.162 FLS	D 0824 LF 02	118	08/1995 → 06/1996		55	24	063534699820	**MAN2011**
14.192 F,14.192 FL	D 0826 LF01, D 0826 LF05, D 0826 LF07	140	07/1990 → 06/1996		55	24	063534699820	**MAN2011**
14.192 FK	D 0826 LF01, D 0826 LF05, D 0826 LF07	140	07/1990 → 06/1996		55	24	063534699820	**MAN2011**
14.192 FS,14.192 FLS	D 0826 LF01, D 0826 LF05, D 0826 LF07	140	07/1990 → 06/1996		55	24	063534699820	**MAN2011**
14.222 F,14.222 FL	D 0826 LF11	162	05/1994 → 06/1996		55	24	063534699820	**MAN2011**
14.222 FK	D 0826 LF11	162	05/1994 → 06/1996		55	24	063534699820	**MAN2011**
14.222 FLS	D 0826 LF11	162	05/1994 → 06/1996		55	24	063534699820	**MAN2011**
14.232 F,14.232 FL	D 0826 LF/217/ Silent	160	05/1990 → 04/1995		55	24	063534699820	**MAN2011**
14.232 F,14.232 FL	D 0826 LF02, D 0826 LF06, D 0826 LF08	169	08/1988 → 06/1996		55	24	063534699820	**MAN2011**
14.232 FK	D 0826 LF02, D 0826 LF06, D 0826 LF08	169	08/1988 → 06/1996		55	24	063534699820	**MAN2011**
14.232 FS,14.232 FLS	D 0826 LF02, D 0826 LF06, D 0826 LF08	169	08/1988 → 06/1996		55	24	063534699820	**MAN2011**

		kW ÷ kW		i	A	V	LONG	SHORT
MAN								
M 90								
14.232 FS,14.232 FLS	D 0826 LF/217/ Silent	160	05/1990 → 04/1995		55	24	063534699820	**MAN2011**
14.262 F,14.262 FL	D 0826 LF13	191	08/1995 → 06/1996		55	24	063534699820	**MAN2011**
14.262 FK	D 0826 LF13	191	08/1995 → 06/1996		55	24	063534699820	**MAN2011**
14.262 FS,14.262 FLS	D 0826 LF13	191	08/1995 → 06/1996		55	24	063534699820	**MAN2011**
14.272 F,14.272 FL	D 2865 LF02	198	09/1991 → 10/1992		55	24	063534699820	**MAN2011**
14.272 F,14.272 FL	D 0826 LF04	198	10/1992 → 06/1996		55	24	063534699820	**MAN2011**
14.272 FK	D 0826 LF04	198	10/1992 → 06/1996		55	24	063534699820	**MAN2011**
14.272 FK	D 2865 LF02	198	09/1991 → 10/1992		55	24	063534699820	**MAN2011**
14.272 FS,14.272 FLS	D 2865 LF02	198	09/1991 → 10/1992		55	24	063534699820	**MAN2011**
14.272 FS,14.272 FLS	D 0826 LF04	198	12/1992 → 06/1996		55	24	063534699820	**MAN2011**
17.192 F,17.192 FL	D 0826 LF01, D 0826 LF05	140	07/1990 → 04/1995		55	24	063534699820	**MAN2011**
17.192 FA	D 0826 LF01, D 0826 LF05, D 0826 LF07	140	07/1990 → 06/1996		55	24	063534699820	**MAN2011**
17.192 FAK	D 0826 LF01, D 0826 LF05, D 0826 LF07	140	07/1990 → 06/1996		55	24	063534699820	**MAN2011**
17.192 FK	D 0826 LF01	140	07/1990 → 01/1991		55	24	063534699820	**MAN2011**
17.192 FS,17.192 FLS	D 0826 LF01, D 0826 LF05	140	07/1990 → 04/1995		55	24	063534699820	**MAN2011**
17.222 FA	D 0826 LF11	162	05/1994 → 06/1996		55	24	063534699820	**MAN2011**
17.222 FAK	D 0826 LF11	162	05/1994 → 06/1996		55	24	063534699820	**MAN2011**
17.232 F,17.232 FL	D 0826 LF02, D 0826 LF06	169	08/1988 → 04/1995		55	24	063534699820	**MAN2011**
17.232 F,17.232 FL	D 0826 LF/217/ Silent	160	05/1990 → 04/1995		55	24	063534699820	**MAN2011**
17.232 FA	D 0826 LF02, D 0826 LF06, D 0826 LF08	169	02/1989 → 06/1996		55	24	063534699820	**MAN2011**
17.232 FA	D 0826 LF/217/ Silent	160	05/1990 → 04/1995		55	24	063534699820	**MAN2011**
17.232 FAK	D 0826 LF/217/ Silent	160	05/1990 → 04/1995		55	24	063534699820	**MAN2011**
17.232 FAK	D 0826 LF02, D 0826 LF06, D 0826 LF08	169	02/1989 → 06/1996		55	24	063534699820	**MAN2011**
17.232 FK	D 0826 LF02	169	08/1988 → 01/1991		55	24	063534699820	**MAN2011**
17.232 FK	D 0826 LF/217/ Silent	160	05/1990 → 01/1991		55	24	063534699820	**MAN2011**
17.232 FS,17.232 FLS	D 0826 LF02, D 0826 LF06	169	08/1988 → 04/1995		55	24	063534699820	**MAN2011**
17.232 FS,17.232 FLS	D 0826 LF/217/ Silent	160	05/1990 → 04/1995		55	24	063534699820	**MAN2011**

		kW ÷ kW		i	A	V	LONG	SHORT
MAN								
M 90								
17.272 FLS	D 2865 LF02	198	09/1991 → 05/1995		55	24	063534699820	**MAN2011**
17.272 FLS	D 0826 LF04	198	10/1992 → 05/1995		55	24	063534699820	**MAN2011**
18.192 F,18.192 FL,18.192 FLL	D 0826 LF01, D 0826 LF05, D 0826 LF07	140	09/1990 → 06/1996		55	24	063534699820	**MAN2011**
18.192 FK	D 0826 LF01, D 0826 LF05, D 0826 LF07	140	09/1990 → 06/1996		55	24	063534699820	**MAN2011**
18.222 F,18.222 FL,18.222 FLL	D 0826 LF11	162	05/1994 → 06/1996		55	24	063534699820	**MAN2011**
18.222 FK	D 0826 LF11	162	05/1994 → 06/1996		55	24	063534699820	**MAN2011**
18.232 F,18.232 FL,18.232 FLL	D 0826 LF02, D 0826 LF06, D 0826 LF08	169	09/1990 → 06/1996		55	24	063534699820	**MAN2011**
18.232 FK	D 0826 LF02, D 0826 LF06, D 0826 LF08	169	09/1990 → 06/1996		55	24	063534699820	**MAN2011**
18.262 F,18.262 FL,18.262 FLL	D 0826 LF13	191	08/1995 → 06/1996		55	24	063534699820	**MAN2011**
18.262 FK	D 0826 LF13	191	08/1995 → 06/1996		55	24	063534699820	**MAN2011**
18.272 F,18.272 FL,18.272 FLL	D 2865 LF02	198	09/1991 → 05/1994		55	24	063534699820	**MAN2011**
18.272 F,18.272 FL,18.272 FLL	D 0826 LF04	198	10/1992 → 06/1996		55	24	063534699820	**MAN2011**
18.272 FK	D 0826 LF04	198	10/1992 → 06/1996		55	24	063534699820	**MAN2011**
18.272 FK	D 2865 LF02	198	09/1991 → 05/1994		55	24	063534699820	**MAN2011**
24.192 FNL,24.192 FNLL,24.192 FVL	D 0826 LF01, D 0826 LF05, D 0826 LF07	140	07/1989 → 06/1996		55	24	063534699820	**MAN2011**
24.222 FNL,24.222 FNLL,24.222 FVL	D 0826 LF11	162	05/1994 → 06/1996		55	24	063534699820	**MAN2011**
24.232 FNL	D 0826 LF/217/ Silent	160	05/1990 → 04/1995		55	24	063534699820	**MAN2011**
24.232 FNL,24.232 FNLL,24.232 FVL	D 0826 LF02, D 0826 LF06, D 0826 LF08	169	07/1989 → 06/1996		55	24	063534699820	**MAN2011**
24.262 FNL,24.262 FNLL,24.262 FVL	D 0826 LF13	191	08/1995 → 06/1996		55	24	063534699820	**MAN2011**
24.272 FNL,24.272 FNLL,24.272 FVL	D 0826 LF04	198	10/1992 → 06/1996		55	24	063534699820	**MAN2011**
24.272 FNL,24.272 FVL	D 2865 LF02	198	09/1991 → 05/1994		55	24	063534699820	**MAN2011**
NG								
NG 262, NG 263	D 2866 LUH 22	191	07/1998 → 12/2001		100	24	063535255010	**MAN2026**
NG 262, NG 272	D 0826 LUH 01	191 198	08/1992 → 09/1995		55	24	063534699820	**MAN2011**
NG 312, NG 313	D 2866 LUH26	228	07/1998 → 12/2001		100	24	063535255010	**MAN2026**

		kW ÷ kW			A	V	LONG	SHORT
MAN								
NL								
NL 202, NL 222, NL 223	D 0826 LUH 03, D 0826 LUH 12	157 162	07/1998 → 09/2001		100	24	063535255010	**MAN2026**
NL 243	E 2866 DUH 03, E 2866 DUH 04	180	09/2002 → 09/2006		100	24	063535255010	**MAN2026**
NL 262, NL 263	D 2866 LUH 22	191	07/1998 →		100	24	063535255010	**MAN2026**
NL 313	D 2866 LUH26	228	11/1999 → 12/2001		100	24	063535255010	**MAN2026**
NM								
NM 182, NM 192	D 0826 LOH 01	130 140	10/1993 → 03/1997		55	24	063534699820	**MAN2011**
NU								
NU 263	D 2866 LUH 22	191	07/1998 → 09/2001		100	24	063535255010	**MAN2026**
NU 263	D 2865 LUH09	191	09/1996 → 07/1998		100	24	063535255010	**MAN2026**
NU 263	D 0826 LUH 13	191	07/1998 → 09/2001		100	24	063535255010	**MAN2026**
NU 313	D 2866 LUH26	228	07/1998 → 09/2001		100	24	063535255010	**MAN2026**
NU 313 15M	D 2866 LUH 21	228	07/1998 → 12/2001		100	24	063535255010	**MAN2026**
R								
FRH 362	D 2866 KUH/360	265 274	05/1985 → 12/1992		55	24	063534699820	**MAN2011**
R 292, FR 292, FRH 292	D 2866 TOH/310, D 2866 TUH/290	213 229	04/1992 → 12/1992		55	24	063534699820	**MAN2011**
SG								
SG 240 H,SG 292 H	D 2866 TUH/290	213	11/1984 → 09/1989		55	24	063534699820	**MAN2011**
SG 242,SG 292	D 2866 TOH/310, D 2866 TUH/290	224 229	09/1985 → 04/1994		55	24	063534699820	**MAN2011**
SM								
SM 182,SM 192	D 0826 LOH 01	130 140	04/1992 → 02/1995		55	24	063534699820	**MAN2011**
SU								
SU 240	D 2866 TOH/290	213	01/1986 → 09/1989		55	24	063534699820	**MAN2011**
SU 292	D 2866 TOH/310	229	04/1992 → 04/1993		55	24	063534699820	**MAN2011**
TGA								
18.310 FAC, FARC	D 2866 LF26	228	09/2002 → 12/2005		100	24	063535255010	**MAN2026**
18.310 FAK, FAK-L, FALK	D 2866 LF26	228	09/2002 → 12/2005		100	24	063535255010	**MAN2026**
18.310 FAS, FARS	D 2866 LF26	228	09/2002 → 12/2005		100	24	063535255010	**MAN2026**
18.310 FC, FLC, FRC, FLLC, FLLC/N, FLLW, FLLRC, FLLRW	D 2866 LF26, D 2866 LF36	228	04/2000 → 03/2004		100	24	063535255010	**MAN2026**
18.310 FK, FLK, FK-L, FLRK	D 2866 LF26, D 2866 LF36	228	12/2000 → 06/2004		100	24	063535255010	**MAN2026**
18.310 FLS, FLLS, FLLS/N, FLS-TS, FLRS, FLLRS	D 2866 LF26, D 2866 LF36	228	04/2000 → 03/2004		100	24	063535255010	**MAN2026**
18.360 FAC, FARC	D 2866 LF27	265	09/2002 → 12/2005		100	24	063535255010	**MAN2026**
18.360 FAK, FALK, FAK-L, FALK-L	D 2866 LF27	265	09/2002 → 12/2005		100	24	063535255010	**MAN2026**

		kW ÷ kW		i	A	V	LONG	SHORT
MAN								
TGA								
18.360 FAS, FALS, FARS	D 2866 LF27	265	09/2002 → 12/2005		100	24	063535255010	**MAN2026**
18.360 FC, FLC, FRC, FLLC, FLLC/N, FLLW, FLLRW	D 2866 LF27, D 2866 LF37	265	04/2000 → 03/2004		100	24	063535255010	**MAN2026**
18.360 FK, FLK, FK-L, FLRK	D 2866 LF27, D 2866 LF37	265	12/2000 → 03/2004		100	24	063535255010	**MAN2026**
18.360 FLS, FLLS, FLLS/N, FLS-TS, FLRS, FLLRS	D 2866 LF27, D 2866 LF37	265	09/2001 → 09/2003		100	24	063535255010	**MAN2026**
18.410 FAC, FARC	D 2866 LF28	301	09/2002 → 12/2005		100	24	063535255010	**MAN2026**
18.410 FAK, FAK-L, FALK	D 2866 LF28	301	09/2002 → 12/2005		100	24	063535255010	**MAN2026**
18.410 FAS, FALS, FARS	D 2866 LF28	301	09/2002 → 12/2005		100	24	063535255010	**MAN2026**
18.410 FC, FRC, FLC, FLRC, FLLC, FLLC/N, FLLW, FLLRC	D 2866 LF28, D 2866 LF32	301	04/2000 → 03/2004		100	24	063535255010	**MAN2026**
18.410 FK, FK-L, FLK, FLRK	D 2866 LF28, D 2866 LF32	301	12/2000 → 03/2004		100	24	063535255010	**MAN2026**
18.410 FLS, FLLS, FLLS/N, FLS-TS, FLRS, FLLRS	D 2866 LF28, D 2866 LF32	301	04/2000 → 03/2004		100	24	063535255010	**MAN2026**
18.460 FC, FLC, FRC, FLLC, FLLC/N, FLLW, FLLRC, FLLRW	D 2876 LF 04, D 2876 LF 07	338	04/2000 → 05/2004		100	24	063535255010	**MAN2026**
18.460 FK, FK-L, FLK, FLRK	D 2876 LF 04, D 2876 LF 07	338	12/2000 → 05/2004		100	24	063535255010	**MAN2026**
18.460 FLS, FLLS, FLLS/N, FLS-TS, FLRS, FLLRS	D 2876 LF 04, D 2876 LF 07	338	04/2000 → 05/2004		100	24	063535255010	**MAN2026**
18.480 FAC, FARC	D 2876 LF 12	353	07/2003 → 09/2006		100	24	063535255010	**MAN2026**
18.480 FC, FLC, FLLC, FLLW, FLLRW, FLLRC	D 2876 LF 12	353	07/2003 → 09/2006		100	24	063535255010	**MAN2026**
18.480 FK, 18.480 FLK	D 2876 LF 12	353	07/2003 → 09/2006		100	24	063535255010	**MAN2026**
18.480 FLS, FLLS, FLLS/N, FLS-TS, FLRS-WW	D 2876 LF 12, D 2876 LF 25	353	07/2003 → 09/2006		100	24	063535255010	**MAN2026**
18.510 FC, FLC, FRC, FLLC, FLLC/N, FLLW, FLLRC, FLLRW	D 2876 LF 05	375	09/2000 → 06/2003		100	24	063535255010	**MAN2026**
18.510 FLS, FLLS, FLLS/N, FLRS, FLLRS	D 2876 LF 05	375	04/2000 → 06/2003		100	24	063535255010	**MAN2026**
18.530 FAC	D 2876 LF 13	390	04/2004 → 09/2004		100	24	063535255010	**MAN2026**
18.530 FAK, FALK	D 2876 LF 13	390	04/2004 → 09/2004		100	24	063535255010	**MAN2026**
18.530 FAS, FALS	D 2876 LF 13	390	04/2004 → 09/2004		100	24	063535255010	**MAN2026**

		kW ÷ kW		i	A	V	LONG	SHORT
MAN								
TGA								
18.530 FC, FLC, FLLC, FLLC/N, FLLW, FLLRC, FLLRW	D 2876 LF 13	390	11/2002 → 09/2004		100	24	063535255010	**MAN2026**
18.530 FLS	D 2876 LF 13	390	10/2002 → 09/2006		100	24	063535255010	**MAN2026**
24.360 FNLLC/N, FNLLW, FNLLRW, FNLLRC	D 2866 LF27	265	11/2002 → 05/2004		100	24	063535255010	**MAN2026**
24.410 FNLLC/N, FNLLW, FNLLRW	D 2866 LF28	301	11/2002 → 05/2004		100	24	063535255010	**MAN2026**
24.460 FNLLC/N, FNLLW, FNLLRC, FNLLRW	D 2876 LF 04	338	11/2002 → 05/2004		100	24	063535255010	**MAN2026**
24.510 FNLLC/N, FNLLW, FNLLRW	D 2876 LF 05	375	11/2002 → 06/2003		100	24	063535255010	**MAN2026**
26.310 FDAC, FDARC	D 2866 LF26	228	02/2002 → 06/2004		100	24	063535255010	**MAN2026**
26.310 FDAK	D 2866 LF26	228	02/2002 → 06/2004		100	24	063535255010	**MAN2026**
26.310 FDAS, FDARS	D 2866 LF26	228	02/2002 → 06/2004		100	24	063535255010	**MAN2026**
26.310 FDC, FDLC, FDRC, FDLC/M, FDLRC	D 2866 LF26	228	01/2001 → 06/2004		100	24	063535255010	**MAN2026**
26.310 FDK, FDLK, FDRK	D 2866 LF26	228	09/2002 → 06/2004		100	24	063535255010	**MAN2026**
26.310 FDS, FDLS, FDLS/M, FDLRS	D 2866 LF26	228	01/2001 → 06/2004		100	24	063535255010	**MAN2026**
26.310 FD-TM, FDR-TM	D 2866 LF26	228	10/2000 → 06/2004		100	24	063535255010	**MAN2026**
26.310 FNLC, FNLLC, FVLC, FNLLW, FNLRC, FNLLRW	D 2866 LF26, D 2866 LF36	228	09/2000 → 06/2004		100	24	063535255010	**MAN2026**
26.310 FPLS, FVLS, FNLS, FNLLS, FPLRS, FNLRS, FVLRS	D 2866 LF26, D 2866 LF36	228	12/2000 → 06/2004		100	24	063535255010	**MAN2026**
26.310 FVL-KO	D 2866 LF26, D 2866 LF36	228	12/2000 → 06/2004		100	24	063535255010	**MAN2026**
26.310, 26.320 FVL-KO	D 2066 LF 04, D 2066 LF 14, D 2066 LF 35, D 2066 LF 39	228 235	02/2004 → 06/2004		100	24	063535255010	**MAN2026**
26.360 FDAC, FDARC	D 2866 LF27, D 2866 LF37	265	09/2002 → 06/2004		100	24	063535255010	**MAN2026**
26.360 FDAK, FDALK	D 2866 LF27, D 2866 LF37	265	02/2002 →		100	24	063535255010	**MAN2026**
26.360 FDAS, FDARS	D 2866 LF27	265	09/2002 → 06/2004		100	24	063535255010	**MAN2026**
26.360 FDC, FDLC, FDLC/M, FDRC, FDLRC-WW	D 2866 LF27, D 2866 LF37	265	01/2001 →		100	24	063535255010	**MAN2026**
26.360 FDK, FDLK, FDRK, FDLRK	D 2866 LF27, D 2866 LF37	265	09/2002 → 12/2005		100	24	063535255010	**MAN2026**

		kW ÷ kW		i	A	V	MAGNETI MARELLI LONG	MAGNETI MARELLI SHORT
MAN								
TGA								
26.360 FDLS, FDLS/M, FDLRS, FDLRS/M, FDLRS-WW , FDRS	D 2866 LF27, D 2866 LF37	265	09/2003 → 12/2005		100	24	063535255010	**MAN2026**
26.360 FDS, FDLS, FNLS, FNLLS, FPLS, FPLRS, FVLS, FVLRS	D 2866 LF27, D 2866 LF37	265	12/2000 →		100	24	063535255010	**MAN2026**
26.360 FD-TM, FDR-TM	D 2866 LF27	265	09/2002 → 12/2005		100	24	063535255010	**MAN2026**
26.360 FNLC, FNLLC, FNLLW, FNLLRC, FNLLRW, FVLC	D 2866 LF27, D 2866 LF37	265	09/2000 →		100	24	063535255010	**MAN2026**
26.360 FVL-KO	D 2866 LF27, D 2866 LF37	265	08/2002 → 10/2002		100	24	063535255010	**MAN2026**
26.410 FDAC, FDARC	D 2866 LF28, D 2866 LF32	301	02/2002 → 06/2004		100	24	063535255010	**MAN2026**
26.410 FDAK, FDALK	D 2866 LF28	301	09/2002 → 12/2005		100	24	063535255010	**MAN2026**
26.410 FDAS, FDALS, FDARS	D 2866 LF28	301	09/2002 → 06/2004		100	24	063535255010	**MAN2026**
26.410 FDC, FDLC, FDLC/M, FDLC-WW; FDRC-WW, FDLRC-WW	D 2866 LF28, D 2866 LF32	301	09/2002 → 12/2005		100	24	063535255010	**MAN2026**
26.410 FDK, FDRK, FDLK, FDLRK	D 2866 LF28, D 2866 LF32	301	09/2002 → 12/2005		100	24	063535255010	**MAN2026**
26.410 FDS, FDLS, FDLS/M, FDLS-WW, FDRS-WW, FDLRS-WW	D 2866 LF28, D 2866 LF32	301	09/2002 → 12/2005		100	24	063535255010	**MAN2026**
26.410 FD-TM, FDR-TM	D 2866 LF28	301	09/2002 → 12/2005		100	24	063535255010	**MAN2026**
26.410 FNLC, FNLLC, FNLLW, FNLRC, FNLLRC, FVLC	D 2866 LF28, D 2866 LF32	301	04/2000 → 12/2005		100	24	063535255010	**MAN2026**
26.410 FPLS, FPLRS, FVLS, FNLS, FNLLS	D 2866 LF28, D 2866 LF32	301	12/2000 → 12/2005		100	24	063535255010	**MAN2026**
26.410 FVLC	D 2866 LF28	301	09/2003 → 05/2004		100	24	063535255010	**MAN2026**
26.410 FVL-KO	D 2866 LF28, D 2866 LF32	301	12/2000 → 12/2005		100	24	063535255010	**MAN2026**
26.460 FDC, FDLC, FDLC/M, FDLC-WW, FDRC, FDLRC-WW	D 2876 LF 04, D 2876 LF 07	338	06/2001 → 06/2005		100	24	063535255010	**MAN2026**
26.460 FDK, FDLK, FDLRK	D 2876 LF 04, D 2876 LF 07	338	01/2001 →		100	24	063535255010	**MAN2026**
26.460 FDS, FDLS, FDLS/M, FDLS-WW, FDRS-WW, FDLRS-WW	D 2876 LF 04, D 2876 LF 07	338	06/2001 → 08/2002		100	24	063535255010	**MAN2026**
26.460 FD-TM, FDR-TM	D 2876 LF 04, D 2876 LF 07	338	01/2001 → 08/2002		100	24	063535255010	**MAN2026**

		kW ÷ kW			A	V	LONG	SHORT
MAN								
TGA								
26.460 FNLC, FNLRC, FNLLC, FNLLRW, FNLLRC	D 2876 LF 04, D 2876 LF 07	338	08/2002 → 10/2002		100	24	063535255010	**MAN2026**
26.460 FPLS, FPLRS, FVLS, FVLRS, FNLS, FNLLS, FNLRS	D 2876 LF 04, D 2876 LF 07	338	12/2000 → 05/2004		100	24	063535255010	**MAN2026**
26.460 FVLC	D 2876 LF 04, D 2876 LF 07	338	09/2002 → 06/2005		100	24	063535255010	**MAN2026**
26.460 FVL-KO	D 2876 LF 04, D 2876 LF 07	338	12/2000 → 05/2004		100	24	063535255010	**MAN2026**
26.480 FDAC, FDALC, FDARC	D 2876 LF 12	353	09/2002 →		100	24	063535255010	**MAN2026**
26.480 FDAS, FDALS, FDARS	D 2876 LF 12	353	09/2002 →		100	24	063535255010	**MAN2026**
26.510 FDC, FDC/M, FDRC, FDLC, FDLC/M, FDLRC	D 2876 LF 05	375	06/2001 → 06/2003		100	24	063535255010	**MAN2026**
26.510 FDS, FDLS, FDLS/M, FDRS, FDLRS	D 2876 LF 05	375	06/2001 → 06/2003		100	24	063535255010	**MAN2026**
26.510 FNLC, FNLLC, FNLLW, FNLLRC, FVLC	D 2876 LF 05	375	08/2002 → 10/2002		100	24	063535255010	**MAN2026**
26.510 FNLS, FNLLS, FNLRS, FPLS, FVLS	D 2876 LF 05	375	12/2000 →		100	24	063535255010	**MAN2026**
26.530 FNLC, FNLLC, FNLLW, FNLLRC, FVLC, FVLRC	D 2876 LF 13	390	09/2002 →		100	24	063535255010	**MAN2026**
28.310 FNLC, FNLLC	D 2866 LF26	228	09/2002 → 06/2005		100	24	063535255010	**MAN2026**
28.310 FNLC, FNLLC, FNLRC	D 2866 LF26	228	09/2002 → 06/2005		100	24	063535255010	**MAN2026**
28.310 FNLS, FNLRS	D 2866 LF26	228	09/2002 → 06/2005		100	24	063535255010	**MAN2026**
28.360 FNLC, FNLLC	D 2866 LF27	265	09/2002 → 06/2005		100	24	063535255010	**MAN2026**
28.360 FNLS, FNLRS	D 2866 LF27	265	09/2002 → 06/2005		100	24	063535255010	**MAN2026**
28.410 FNLC, FNLLC	D 2866 LF28	301	09/2002 → 06/2005		100	24	063535255010	**MAN2026**
28.410 FNLC, FNLLC, FNLRC	D 2866 LF28	301	09/2002 → 06/2005		100	24	063535255010	**MAN2026**
28.410 FNLS, FNLRS	D 2866 LF28	301	09/2002 → 06/2005		100	24	063535255010	**MAN2026**
28.460 FNLC, FNLLC, FNLRC	D 2876 LF 04	338	09/2002 → 05/2004		100	24	063535255010	**MAN2026**
28.460 FNLS, FNLRS	D 2876 LF 04	338	09/2002 → 05/2004		100	24	063535255010	**MAN2026**
28.510 FNLC, FNLLC, FNLRC	D 2876 LF 05	375	09/2002 → 06/2003		100	24	063535255010	**MAN2026**
28.510 FNLS, FNLRS	D 2876 LF 05	375	09/2002 → 06/2003		100	24	063535255010	**MAN2026**

		kW ÷ kW		i	A	V	LONG	SHORT
MAN								
TGA								
32.310	D 2866 LF26	228	06/2002 → 05/2004		100	24	063535255010	**MAN2026**
32.310 FFDC, FFDLC, FFDLRC	D 2866 LF26	228	06/2002 → 05/2004		100	24	063535255010	**MAN2026**
32.310 FFDK, FFDLK	D 2866 LF26	228	06/2002 → 05/2004		100	24	063535255010	**MAN2026**
32.360 FFDC, FFDLC, FFDLRC	D 2866 LF27	265	09/2002 → 01/2006		100	24	063535255010	**MAN2026**
32.360 FFDK, FFDLK	D 2866 LF27	265	09/2002 → 01/2006		100	24	063535255010	**MAN2026**
32.360 FFD-TM	D 2866 LF27	265	09/2002 → 01/2006		100	24	063535255010	**MAN2026**
32.410 FFDC, FFDLC, FFDRC, FFDLRC	D 2866 LF28	301	09/2002 → 01/2006		100	24	063535255010	**MAN2026**
32.410 FFDK, FFDLK	D 2866 LF28	301	09/2002 → 01/2006		100	24	063535255010	**MAN2026**
32.410 FFD-TM	D 2866 LF28	301	09/2002 → 01/2006		100	24	063535255010	**MAN2026**
32.460 FFDC, FFDLC, FFDLRC	D 2876 LF 04	338	09/2002 → 05/2004		100	24	063535255010	**MAN2026**
32.460 FFDK, FFDLK	D 2876 LF 04	338	09/2002 → 05/2004		100	24	063535255010	**MAN2026**
32.460 FFD-TM	D 2876 LF 04	338	09/2002 → 05/2004		100	24	063535255010	**MAN2026**
33.360 FDAC, FDARC, FDAC-WW	D 2866 LF27, D 2866 LF37	265	09/2002 → 02/2008		100	24	063535255010	**MAN2026**
33.360 FDAK, FDAK-WW	D 2866 LF27, D 2866 LF37	265	09/2002 → 02/2008		100	24	063535255010	**MAN2026**
33.360 FDAS, FDAS-WW	D 2866 LF27, D 2866 LF37	265	09/2002 → 06/2004		100	24	063535255010	**MAN2026**
33.360 FDC, FDC-WW, FDLC/M, FDRC-WW, FDLRC	D 2866 LF27, D 2866 LF37	265	09/2002 → 02/2008		100	24	063535255010	**MAN2026**
33.360 FDK, FDK-WW, FDLK, FDRK-WW	D 2866 LF27, D 2866 LF37	265	06/2001 → 02/2008		100	24	063535255010	**MAN2026**
33.360 FDS, FDS-WW, FDLS, FDLRS, FDRS-WW	D 2866 LF27, D 2866 LF37	265	09/2002 → 02/2008		100	24	063535255010	**MAN2026**
33.360 FD-TM, FDR-TM	D 2866 LF27	265	01/2001 → 06/2004		100	24	063535255010	**MAN2026**
33.410 FDAC, FDAC-WW, FDALC	D 2866 LF28, D 2866 LF32	301	09/2002 → 06/2004		100	24	063535255010	**MAN2026**
33.410 FDAK, FDAK-WW, FDALK	D 2866 LF28, D 2866 LF32	301	09/2002 → 12/2005		100	24	063535255010	**MAN2026**
33.410 FDAS, FDAS-WW, FDALS	D 2866 LF28, D 2866 LF32	301	09/2002 → 06/2004		100	24	063535255010	**MAN2026**
33.410 FDC, FDC-WW, FDLC, FDLRC, FDRC-WW	D 2866 LF28, D 2866 LF32	301	09/2002 → 12/2005		100	24	063535255010	**MAN2026**
33.410 FDK, FDK-WW, FDLK, FDRK-WW	D 2866 LF28, D 2866 LF32	301	09/2002 → 12/2005		100	24	063535255010	**MAN2026**
33.410 FDS, FDS-WW, FDLS, FDLS/M, FDLRS, FDRS-WW	D 2866 LF28, D 2866 LF32	301	09/2002 → 12/2005		100	24	063535255010	**MAN2026**
33.410 FD-TM, FDR-TM	D 2866 LF28	301	09/2002 → 12/2005		100	24	063535255010	**MAN2026**

		kW ÷ kW		i	A	V	LONG	SHORT
MAN								
TGA								
33.460 FDAC-WW	D 2876 LF 07	338	01/2006 → 06/2007		100	24	063535255010	**MAN2026**
33.460 FDAK-WW	D 2876 LF 07	338	01/2006 → 06/2007		100	24	063535255010	**MAN2026**
33.460 FDAS-WW	D 2876 LF 07	338	01/2006 → 06/2007		100	24	063535255010	**MAN2026**
33.460 FDC, FDC-WW, FDLC, FDLRC, FDRC-WW	D 2876 LF 04, D 2876 LF 07	338	09/2002 → 06/2007		100	24	063535255010	**MAN2026**
33.460 FDK, FDK-WW, FDLK, FDRK-WW	D 2876 LF 04, D 2876 LF 07	338	09/2002 → 12/2005		100	24	063535255010	**MAN2026**
33.460 FDS, FDLS, FDLS/M, FDLRS, FDRS-WW	D 2876 LF 04, D 2876 LF 07	338	09/2002 → 12/2005		100	24	063535255010	**MAN2026**
33.460 FD-TM, FDR-TM	D 2876 LF 04	338	09/2002 → 03/2007		100	24	063535255010	**MAN2026**
33.510 FDC, FDC/M, FDLC, FDRC, FDLRC	D 2876 LF 05	375	09/2002 → 06/2003		100	24	063535255010	**MAN2026**
33.510 FDS, FDLS/M, FDRS, FDLRS/M	D 2876 LF 05	375	09/2002 → 06/2003		100	24	063535255010	**MAN2026**
35.310 FFDC, FFDLC	D 2866 LF26	228	06/2003 → 06/2005		100	24	063535255010	**MAN2026**
35.310 FFDK, FFDLK	D 2866 LF26	228	06/2003 → 06/2005		100	24	063535255010	**MAN2026**
35.310 FFD-TM	D 2866 LF26	228	11/2003 → 06/2005		100	24	063535255010	**MAN2026**
35.360 FFDC, FFDLC	D 2866 LF27	265	06/2003 → 09/2006		100	24	063535255010	**MAN2026**
35.360 FFDK, FFDLK	D 2866 LF27	265	06/2003 → 09/2006		100	24	063535255010	**MAN2026**
35.360 FFD-TM	D 2866 LF27	265	11/2003 → 09/2006		100	24	063535255010	**MAN2026**
35.360 FFNLC	D 2866 LF27	265	07/2006 → 09/2006		100	24	063535255010	**MAN2026**
35.410 FFDC, FFDLC	D 2866 LF28	301	10/2003 → 12/2005		100	24	063535255010	**MAN2026**
35.410 FFDK, FFDLK	D 2866 LF28	301	10/2003 → 12/2005		100	24	063535255010	**MAN2026**
35.410 FFD-TM	D 2866 LF28	301	11/2003 → 12/2005		100	24	063535255010	**MAN2026**
35.460 FFDC, FFDLC	D 2876 LF 04	338	10/2003 → 06/2005		100	24	063535255010	**MAN2026**
35.460 FFDK, FFDLK	D 2876 LF 04	338	10/2003 → 06/2005		100	24	063535255010	**MAN2026**
35.460 FFD-TM	D 2876 LF 04	338	11/2003 → 06/2005		100	24	063535255010	**MAN2026**
37.360 FFDC	D 2866 LF27	265	12/2004 → 12/2005		100	24	063535255010	**MAN2026**
37.360 FFDK	D 2866 LF27	265	12/2004 → 12/2005		100	24	063535255010	**MAN2026**
37.360 FFD-TM	D 2866 LF27	265	12/2004 → 12/2005		100	24	063535255010	**MAN2026**
37.410 FFDC	D 2866 LF28	301	12/2004 → 12/2005		100	24	063535255010	**MAN2026**
37.410 FFDK	D 2866 LF28	301	12/2004 → 12/2005		100	24	063535255010	**MAN2026**
37.410 FFD-TM	D 2866 LF28	301	12/2004 → 12/2005		100	24	063535255010	**MAN2026**
37.460 FFDC	D 2876 LF 04	338	12/2004 → 06/2005		100	24	063535255010	**MAN2026**
37.460 FFDK	D 2876 LF 04	338	12/2004 → 06/2005		100	24	063535255010	**MAN2026**
37.460 FFD-TM	D 2876 LF 04	338	12/2004 → 06/2005		100	24	063535255010	**MAN2026**
40.410 FDAK-WW	D 2866 LF28, D 2866 LF32	301	06/2004 → 12/2005		100	24	063535255010	**MAN2026**
40.410 FDAS-WW	D 2866 LF28, D 2866 LF32	301	06/2004 → 12/2005		100	24	063535255010	**MAN2026**
40.410 FDK-WW	D 2866 LF28, D 2866 LF32	301	06/2004 → 12/2005		100	24	063535255010	**MAN2026**

		kW ÷ kW			A	V	LONG	SHORT
MAN								
TGA								
40.410 FDS-WW	D 2866 LF28, D 2866 LF32	301	06/2004 → 12/2005		100	24	063535255010	**MAN2026**
40.460 FDAK-WW	D 2876 LF 07	338	04/2004 → 05/2010		100	24	063535255010	**MAN2026**
40.460 FDAS-WW	D 2876 LF 07	338	04/2004 → 05/2010		100	24	063535255010	**MAN2026**
41.360 FFDC, FFDC/M, FFDC/M-WW, FFDRC	D 2866 LF27, D 2866 LF37	265	01/2003 → 12/2005		100	24	063535255010	**MAN2026**
41.360 FFD-TM	D 2866 LF27	265	12/2004 → 12/2005		100	24	063535255010	**MAN2026**
41.410 FFDC-WW, FDRC	D 2866 LF28, D 2866 LF32	301	09/2003 → 12/2005		100	24	063535255010	**MAN2026**
41.410 FFDK-WW	D 2866 LF28, D 2866 LF32	301	09/2003 → 12/2005		100	24	063535255010	**MAN2026**
41.410 FFD-TM	D 2866 LF28	301	12/2004 → 12/2005		100	24	063535255010	**MAN2026**
41.460 FFDC-WW, FFDRC	D 2876 LF 07	338	09/2003 → 05/2010		100	24	063535255010	**MAN2026**
41.460 FFDK-WW	D 2876 LF 07	338	09/2003 → 05/2010		100	24	063535255010	**MAN2026**
41.460 FFD-TM	D 2876 LF 04	338	12/2004 → 06/2005		100	24	063535255010	**MAN2026**
UL								
UL 292	D 2866 TUH 01	213 222	09/1989 → 03/1993		55	24	063534699820	**MAN2011**
MERCEDES-BENZ								
LK/LN2								
1114,1114 L	OM 356.904, OM 366.907, OM 366.914, OM 366.930	95 100	10/1984 → 02/1993		55	24	063534699820	**MAN2011**
1117 A	OM 356.947, OM 356.959, OM 357.906, OM 366.966, OM 366.975, OM 366.976	116 125	03/1994 → 12/1998		55	24	063534699820	**MAN2011**
1117 AK	OM 357.902, OM 357.906, OM 357.907	125	03/1994 → 12/1998		55	24	063534699820	**MAN2011**
1117 K	OM 357.901, OM 366.941, OM 366.953, OM 366.962	116 125	04/1984 → 12/1998		55	24	063534699820	**MAN2011**
1117 O,1117 LO	OM 356.949, OM 357.919, OM 366.971	116 125	03/1984 → 12/1998		55	24	063534699820	**MAN2011**
1117 S,1117 LS	OM 357.901, OM 357.918, OM 366.941, OM 366.953, OM 366.962	116 125	01/1984 → 12/1998		55	24	063534699820	**MAN2011**
1117,1117 L	OM 357.901, OM 357.918, OM 366.941, OM 366.953, OM 366.962, OM 366.970	116 125	01/1984 → 12/1998		55	24	063534699820	**MAN2011**

		kW ÷ kW		i	A	V	MAGNETI MARELLI LONG	MAGNETI MARELLI SHORT
MERCEDES-BENZ								
LK/LN2								
1120 AF	OM 356.994, OM 356.995, OM 366.992, OM 366.994	150 155	02/1987 → 12/1998		55	24	063534699820	**MAN2011**
1120 F	OM 356.996, OM 366.992	150 155	02/1990 → 12/1992		55	24	063534699820	**MAN2011**
1120 L	OM 366.962	125	08/1984 → 02/1993		55	24	063534699820	**MAN2011**
1120 O,1120 LO	OM 356.993, OM 357.929, OM 366.993	150 155	02/1992 → 11/1996		55	24	063534699820	**MAN2011**
1120 S,1120 LS	OM 356.986, OM 357.920, OM 357.927, OM 357.932, OM 366.988	148 155	01/1984 → 12/1998		55	24	063534699820	**MAN2011**
1120,1120 L	OM 356.986, OM 356.992, OM 357.920, OM 357.927, OM 357.932, OM 366.988	148 155	01/1984 → 12/1998		55	24	063534699820	**MAN2011**
1124 AF	OM 356.983, OM 356.989, OM 356.991, OM 357.943, OM 357.944	177	06/1994 → 11/1996		55	24	063534699820	**MAN2011**
1124 F	OM 356.979, OM 356.983, OM 357.933, OM 357.942	155 177	03/1992 → 12/1998		55	24	063534699820	**MAN2011**
1217 KO	OM 357.901, OM 357.918	125	03/1994 → 12/1998		55	24	063534699820	**MAN2011**
1314	OM 356.910, OM 366.907, OM 366.914	95 100	12/1992 → 12/1998		55	24	063534699820	**MAN2011**
1314 AK	OM 356.909, OM 366.918, OM 366.937	95 100	12/1992 → 12/1998		55	24	063534699820	**MAN2011**
1314 KO	OM 356.908, OM 366.936	95 100	07/1984 → 09/1995		55	24	063534699820	**MAN2011**
1317 AK	OM 356.945, OM 357.907, OM 366.944, OM 366.966	116 125	06/1987 → 12/1998		55	24	063534699820	**MAN2011**
1317 AK	OM 356.995	155	12/1992 → 12/1998		55	24	063534699820	**MAN2011**
1317 K	OM 357.902, OM 357.961, OM 366.962	125	07/1984 → 12/1998		55	24	063534699820	**MAN2011**
1317 KO	OM 356.944, OM 357.903, OM 357.962	116 125	03/1994 → 12/1998		55	24	063534699820	**MAN2011**

		kW ÷ kW		i	A	V	LONG	SHORT
MERCEDES-BENZ								
LK/LN2								
1317 S,1317 LS	OM 356.944, OM 357.902, OM 357.961, OM 366.946, OM 366.953, OM 366.962	116 125	11/1986 → 12/1998		55	24	063534699820	**MAN2011**
1317,1317 L	OM 356.944, OM 357.902, OM 357.961, OM 366.946, OM 366.953, OM 366.962	116 125	11/1986 → 12/1998		55	24	063534699820	**MAN2011**
1320 AK	OM 356.995	155	12/1992 → 12/1998		55	24	063534699820	**MAN2011**
1320 L	OM 356.983	177	12/1992 → 12/1998		55	24	063534699820	**MAN2011**
1320 S,1320 LS	OM 356.992, OM 357.921, OM 357.932, OM 366.980, OM 366.988, OM 366.992, OM 366.997	148 155	10/1984 → 12/1998		55	24	063534699820	**MAN2011**
1320,1320 L	OM 366.962, OM 366.966	125	10/1984 → 02/1993		55	24	063534699820	**MAN2011**
1320,1320 L	OM 356.992, OM 357.921, OM 357.932, OM 366.980, OM 366.988, OM 366.992, OM 366.997	148 155	10/1984 → 12/1998		55	24	063534699820	**MAN2011**
1324 S,1324 LS	OM 356.983, OM 357.940, OM 357.948, OM 366.999	170 177	01/1991 → 12/1998		55	24	063534699820	**MAN2011**
1324,1324 L	OM 356.983, OM 357.940, OM 357.948, OM 366.999	170 177	01/1991 → 12/1998		55	24	063534699820	**MAN2011**
1514 K	OM 356.908, OM 366.936	95 100	01/1989 → 12/1992		55	24	063534699820	**MAN2011**
1514,1514 L	OM 356.908, OM 366.936	95 100	01/1989 → 12/1998		55	24	063534699820	**MAN2011**
1517 K	OM 356.946, OM 356.953, OM 357.903, OM 357.963, OM 366.945, OM 366.979	116 125	01/1989 → 12/1998		55	24	063534699820	**MAN2011**
1517,1517 L	OM 356.946, OM 356.953, OM 357.903, OM 357.962, OM 357.963, OM 366.945, OM 366.979	116 125	10/1988 → 12/1998		55	24	063534699820	**MAN2011**
1520,1520 L	OM 357.922, OM 366.995	150 155	01/1984 → 12/1998		55	24	063534699820	**MAN2011**

		kW ÷ kW			A	V	LONG	SHORT
MERCEDES-BENZ								
LK/LN2								
1520,1520 L	OM 356.990, OM 357.922, OM 357.930, OM 366.995	150 155	01/1989 → 12/1998		55	24	063534699820	**MAN2011**
1524,1524 L	OM 356.999, OM 357.941, OM 357.947, OM 366.999	170 177	02/1991 → 12/1998		55	24	063534699820	**MAN2011**
1724	OM 366.999	170	01/1991 → 12/1998		55	24	063534699820	**MAN2011**
2020 L	OM 366.988, OM 366.992, OM 366.995, OM 366.997	148 150	01/1984 → 12/1998		55	24	063534699820	**MAN2011**
709	OM 364.907, OM 364.918	63 66	11/1986 → 12/1998		55	24	063534699820	**MAN2011**
711	OM 354.900	77	03/1994 → 12/1998		55	24	063534699820	**MAN2011**
809	OM 364.907, OM 364.918	63 66	02/1992 → 12/1998		55	24	063534699820	**MAN2011**
809 K	OM 364.907, OM 364.918	63 66	02/1992 → 12/1998		55	24	063534699820	**MAN2011**
811	OM 354.900	77	03/1994 → 12/1998		55	24	063534699820	**MAN2011**
811 K	OM 354.900	77	03/1994 → 12/1998		55	24	063534699820	**MAN2011**
814 F	OM 354.922	103	03/1994 → 11/1996		55	24	063534699820	**MAN2011**
814 F	OM 356.905, OM 356.911, OM 366.905	95 100	05/1986 → 12/1998		55	24	063534699820	**MAN2011**
814 K	OM 356.901, OM 356.902, OM 366.905, OM 366.906, OM 366.907, OM 366.910	95 100	11/1986 → 02/1993		55	24	063534699820	**MAN2011**
814 K	OM 354.920	103	03/1994 → 12/1998		55	24	063534699820	**MAN2011**
814 O, 814 LO	OM 356.906, OM 366.932	95 100	06/1990 → 11/1996		55	24	063534699820	**MAN2011**
814 S	OM 356.901, OM 356.902, OM 366.905, OM 366.906, OM 366.907, OM 366.910	95 100	11/1986 → 02/1993		55	24	063534699820	**MAN2011**
814 S	OM 354.920	103	03/1994 → 12/1998		55	24	063534699820	**MAN2011**
814,814 L	OM 354.920	103	03/1994 → 12/1998		55	24	063534699820	**MAN2011**
814,814L	OM 356.901, OM 356.902, OM 366.905, OM 366.906, OM 366.907, OM 366.910	95 100	11/1986 → 12/1998		55	24	063534699820	**MAN2011**
817 F	OM 356.951, OM 357.908, OM 366.967, OM 366.973	116 125	03/1984 → 12/1998		55	24	063534699820	**MAN2011**

		kW ÷ kW			A	V	LONG	SHORT
MERCEDES-BENZ								
LK/LN2								
817 K	OM 357.900, OM 366.943, OM 366.967	116 125	02/1992 → 12/1998		55	24	063534699820	**MAN2011**
817 O, 817 LO	OM 356.948, OM 357.917, OM 366.969	116 125	01/1984 → 12/1998		55	24	063534699820	**MAN2011**
817 S,817 LS	OM 357.900, OM 366.942, OM 366.943, OM 366.967, OM 366.968	116 125	11/1986 → 12/1998		55	24	063534699820	**MAN2011**
817,817 L	OM 357.900, OM 357.916, OM 366.942, OM 366.943, OM 366.967, OM 366.968	116 125	11/1986 → 12/1998		55	24	063534699820	**MAN2011**
914	OM 356.901, OM 366.905, OM 366.907, OM 366.930	95 100	07/1986 → 02/1993		55	24	063534699820	**MAN2011**
914 AK	OM 356.903, OM 366.918	95 100	03/1991 → 12/1998		55	24	063534699820	**MAN2011**
914 K	OM 356.901, OM 366.905, OM 366.907	95 100	03/1991 → 12/1998		55	24	063534699820	**MAN2011**
917	OM 357.900	125	03/1994 → 12/1998		55	24	063534699820	**MAN2011**
917 AF	OM 356.941, OM 357.909, OM 357.910, OM 366.966, OM 366.974, OM 366.978	116 125	12/1992 → 12/1996		55	24	063534699820	**MAN2011**
917 AK	OM 357.906	125	03/1994 → 12/1998		55	24	063534699820	**MAN2011**
917 K	OM 357.900	125	03/1994 → 12/1998		55	24	063534699820	**MAN2011**
917 KO	OM 357.901, OM 357.918	125	03/1994 → 12/1998		55	24	063534699820	**MAN2011**
O 1114 ,O 1114 L	OM 356.907, OM 366.933	95 100	06/1990 → 11/1996		55	24	063534699820	**MAN2011**
O 814, O 814 L	OM 354.921	103	03/1994 → 12/1998		55	24	063534699820	**MAN2011**
MK								
1222	OM 441.905, OM 441.913, OM 441.923, OM 441.925	160 165	07/1989 → 08/1994		55	24	063534699820	**MAN2011**
1222 A, 1222 LA	OM 441.914, OM 441.926	160 165	09/1989 → 07/1994		55	24	063534699820	**MAN2011**
1222 AF	OM 441.915, OM 441.917, OM 441.923	160 165	09/1989 → 09/1993		55	24	063534699820	**MAN2011**

		kW ÷ kW			A	V	LONG	SHORT
MERCEDES-BENZ								
MK								
1222 F	OM 441.905, OM 441.913, OM 441.923, OM 441.925	160 165	07/1989 → 08/1994		55	24	063534699820	**MAN2011**
1222 S, 1222 LS	OM 441.905, OM 441.913, OM 441.923, OM 441.925	160 165	07/1989 → 08/1994		55	24	063534699820	**MAN2011**
1224 AF	OM 356.999, OM 357.946, OM 366.999	170 177	02/1993 → 09/1996		55	24	063534699820	**MAN2011**
1224 F	OM 356.999	177	02/1993 → 08/1994		55	24	063534699820	**MAN2011**
1226 AF	OM 401.973, OM 401.978, OM 401.984, OM 401.989	180 200	02/1993 → 09/1996		55	24	063534699820	**MAN2011**
1226 AF	OM 442.907, OM 442.914, OM 442.920, OM 442.926, OM 442.932, OM 442.933	195 218	02/1990 → 09/1993		55	24	063534699820	**MAN2011**
1227 A	OM 401.973, OM 401.989	200	01/1992 → 07/1992		55	24	063534699820	**MAN2011**
1234 AF	OM 441.989, OM 441.993, OM 445.923	250	01/1992 → 09/1996		55	24	063534699820	**MAN2011**
1417	OM 356.940, OM 356.943, OM 357.915, OM 366.952	121 129	07/1992 → 09/1996		55	24	063534699820	**MAN2011**
1417 AK	OM 356.940, OM 356.943, OM 357.915, OM 366.952	121 129	07/1992 → 09/1996		55	24	063534699820	**MAN2011**
1417 K	OM 356.943, OM 357.915, OM 366.952	121 125	07/1992 → 09/1996		55	24	063534699820	**MAN2011**
1420 LS	OM 356.984, OM 356.987	155	02/1990 → 06/1993		55	24	063534699820	**MAN2011**
1420,1420 L	OM 356.984, OM 356.987	155	02/1990 → 06/1993		55	24	063534699820	**MAN2011**
1422 F	OM 441.913, OM 441.925	160 165	07/1989 → 09/1993		55	24	063534699820	**MAN2011**
1422 F	OM 356.999	177	03/1993 → 08/1994		55	24	063534699820	**MAN2011**
1422 S,1422 LS	OM 441.905, OM 441.923	160 165	06/1989 → 09/1993		55	24	063534699820	**MAN2011**
1422,1422 L	OM 441.905, OM 441.923	160 165	06/1989 → 09/1993		55	24	063534699820	**MAN2011**
1424	OM 357.946	177	01/1994 → 09/1996		55	24	063534699820	**MAN2011**
1424 S,1424 LS	OM 401.973, OM 401.975, OM 401.977, OM 401.994	180 200	02/1993 → 09/1996		55	24	063534699820	**MAN2011**

		kW ÷ kW		i	A	V	LONG	SHORT
MERCEDES-BENZ								
MK								
1424,1424 L	OM 401.973, OM 401.975, OM 401.994	180 200	02/1993 → 09/1996		55	24	063534699820	**MAN2011**
1426 S,1426 LS	OM 442.914, OM 442.932	191 195	06/1989 → 09/1993		55	24	063534699820	**MAN2011**
1427 F	OM 401.985, OM 401.991	200	02/1993 → 09/1996		55	24	063534699820	**MAN2011**
1431	OM 442.907	213	07/1988 → 08/1996		55	24	063534699820	**MAN2011**
1624 S	OM 401.975	180	02/1993 → 08/1994		55	24	063534699820	**MAN2011**
1720 L	OM 441.916, OM 441.920, OM 441.932	151 153	12/1988 → 08/1994		55	24	063534699820	**MAN2011**
1720 S	OM 356.984	155	02/1990 → 08/1994		55	24	063534699820	**MAN2011**
1720,1720 L	OM 356.984, OM 356.985, OM 366.983	150 155	02/1990 → 09/1996		55	24	063534699820	**MAN2011**
1722	OM 441.920	153	12/1988 → 08/1994		55	24	063534699820	**MAN2011**
1722	OM 442.907	218	12/1988 → 08/1994		55	24	063534699820	**MAN2011**
1722 AK	OM 356.999	177	12/1988 → 08/1994		55	24	063534699820	**MAN2011**
1722 AK	OM 401.973, OM 401.978	200	12/1988 → 08/1994		55	24	063534699820	**MAN2011**
1722 AK	OM 441.914, OM 441.926, OM 441.933	151 165	12/1988 → 08/1994		55	24	063534699820	**MAN2011**
1722 K	OM 441.905, OM 441.913, OM 441.914, OM 441.916, OM 441.920, OM 441.923	153 165	12/1988 → 08/1994		55	24	063534699820	**MAN2011**
1722 K	OM 401.979	230	12/1988 → 08/1994		55	24	063534699820	**MAN2011**
1722 L	OM 366.983	150	12/1988 → 08/1994		55	24	063534699820	**MAN2011**
1722 S	OM 441.905, OM 441.913, OM 441.914, OM 441.916, OM 441.920, OM 441.923	153 165	12/1988 → 08/1994		55	24	063534699820	**MAN2011**
1722, 1722 L, 1722 LL	OM 441.905, OM 441.923	160 165	12/1988 → 08/1994		55	24	063534699820	**MAN2011**
1722,1722 L, 1722 LL	OM 441.905, OM 441.913, OM 441.914, OM 441.916, OM 441.920, OM 441.923, OM 441.932	151 165	12/1988 → 08/1994		55	24	063534699820	**MAN2011**
1726 AK	OM 442.922, OM 442.935	195	06/1989 → 08/1994		55	24	063534699820	**MAN2011**

		kW ÷ kW		i	A	V	MAGNETI MARELLI LONG	MAGNETI MARELLI SHORT
MERCEDES-BENZ								
MK								
1726 K	OM 440.909, OM 442.914, OM 442.922, OM 442.932	195	12/1988 → 08/1994		55	24	063534699820	**MAN2011**
1726 L, 1726 LL	OM 441.960	250	12/1988 → 08/1994		55	24	063534699820	**MAN2011**
1726 LL	OM 401.973, OM 401.978	200	12/1988 → 08/1994		55	24	063534699820	**MAN2011**
1726 S,1726 LS	OM 442.907, OM 442.914, OM 442.922, OM 442.932	195 218	12/1988 → 08/1994		55	24	063534699820	**MAN2011**
1726,1726 L, 1726 LL	OM 442.906, OM 442.907, OM 442.909, OM 442.914, OM 442.922, OM 442.923, OM 442.932	195 218	12/1988 → 08/1994		55	24	063534699820	**MAN2011**
1727 L	OM 401.973, OM 401.978	200	12/1988 → 08/1994		55	24	063534699820	**MAN2011**
1729	OM 442.906, OM 442.907, OM 442.923	210 218	07/1988 → 08/1994		55	24	063534699820	**MAN2011**
1729 LS	OM 442.907	213	07/1988 → 08/1994		55	24	063534699820	**MAN2011**
1733 S,1733 LS	OM 441.960, OM 441.962, OM 441.981, OM 441.983	243 249	01/1989 → 07/1992		55	24	063534699820	**MAN2011**
1733,1733 L, 1734 L	OM 441.960, OM 441.962, OM 441.981, OM 441.983, OM 441.986, OM 441.989, OM 445.920, OM 445.939	243 250	12/1987 → 09/1996		55	24	063534699820	**MAN2011**
1820 K	OM 356.987, OM 357.925	155	05/1992 → 09/1996		55	24	063534699820	**MAN2011**
1820,1820 L	OM 356.984, OM 356.987, OM 357.925	155	01/1991 → 09/1996		55	24	063534699820	**MAN2011**
1824	OM 401.975	180	08/1992 → 09/1996		55	24	063534699820	**MAN2011**
1824 AK	OM 401.984, OM 401.990	180	08/1992 → 09/1996		55	24	063534699820	**MAN2011**
1824 K	OM 401.975	180	08/1992 → 09/1996		55	24	063534699820	**MAN2011**
1827 AK	OM 401.973, OM 401.989	200	08/1992 → 09/1996		55	24	063534699820	**MAN2011**
1827 S,1827 LS	OM 401.973, OM 401.977, OM 401.991	200	12/1990 → 09/1996		55	24	063534699820	**MAN2011**
1827,1827 L	OM 401.973, OM 401.977, OM 401.991	200	12/1990 → 09/1996		55	24	063534699820	**MAN2011**

		kW ÷ kW		i	A	V	LONG	SHORT
MERCEDES-BENZ								
MK								
1831 K	OM 401.979	230	12/1990 → 08/1994		55	24	063534699820	**MAN2011**
1831 S,1831 LS	OM 401.972, OM 401.979, OM 401.993	230	12/1990 → 09/1996		55	24	063534699820	**MAN2011**
1831,1831 L	OM 401.972, OM 401.979, OM 401.993	230	12/1990 → 09/1996		55	24	063534699820	**MAN2011**
1834 S,1834 LS	OM 441.986, OM 441.989, OM 445.920, OM 445.939	250	01/1991 → 09/1996		55	24	063534699820	**MAN2011**
1834,1834 L	OM 441.986, OM 441.987, OM 441.989, OM 441.991, OM 445.920, OM 445.921, OM 445.939	250	01/1991 → 09/1996		55	24	063534699820	**MAN2011**
1926	OM 442.914, OM 442.922, OM 442.932	195	07/1988 → 09/1996		55	24	063534699820	**MAN2011**
2327 L	OM 401.973	200	02/1993 → 09/1996		55	24	063534699820	**MAN2011**
2420,2420 L	OM 356.984, OM 366.983	150 155	02/1990 → 08/1994		55	24	063534699820	**MAN2011**
2422 , 2422 L	OM 441.905, OM 441.923	160 165	09/1989 → 08/1994		55	24	063534699820	**MAN2011**
2422 B	OM 441.912, OM 441.924	160 165	09/1989 → 08/1994		55	24	063534699820	**MAN2011**
2422 K	OM 441.905, OM 441.912, OM 441.923, OM 441.924	160 165	09/1989 → 08/1994		55	24	063534699820	**MAN2011**
2422,2422 L	OM 441.905, OM 441.920, OM 441.923, OM 441.924	153 165	09/1989 → 08/1994		55	24	063534699820	**MAN2011**
2426	OM 442.914, OM 442.921, OM 442.932, OM 442.934	195	01/1990 → 08/1994		55	24	063534699820	**MAN2011**
2426	OM 442.914, OM 442.922, OM 442.932	195	01/1990 → 08/1994		55	24	063534699820	**MAN2011**
2426 B	OM 442.921	195	02/1990 → 08/1994		55	24	063534699820	**MAN2011**
2426 L	OM 442.914, OM 442.932	195	01/1990 → 08/1994		55	24	063534699820	**MAN2011**
2426, 2426 L	OM 442.914, OM 442.922, OM 442.932	195	02/1990 → 08/1994		55	24	063534699820	**MAN2011**

		kW ÷ kW		i	A	V	LONG	SHORT
MERCEDES-BENZ								
MK								
2427 L	OM 401.973, OM 401.977	200	07/1992 → 09/1996		55	24	063534699820	**MAN2011**
2431	OM 401.972, OM 401.979, OM 401.993	230	03/1991 → 09/1996		55	24	063534699820	**MAN2011**
2433 K	OM 441.960, OM 441.981	249	09/1989 → 07/1992		55	24	063534699820	**MAN2011**
2433 L	OM 441.960	243	05/1989 → 07/1992		55	24	063534699820	**MAN2011**
2433 S	OM 441.960, OM 441.981, OM 441.986, OM 441.989	243 250	09/1989 → 07/1992		55	24	063534699820	**MAN2011**
2433 S,2433 LS	OM 441.960, OM 441.962, OM 441.981, OM 441.983	243 249	05/1989 → 07/1992		55	24	063534699820	**MAN2011**
2433,2433 L, 2434 L	OM 441.960, OM 441.962, OM 441.981, OM 441.983, OM 441.986, OM 441.989, OM 445.920, OM 445.939	243 250	12/1987 → 09/1996		55	24	063534699820	**MAN2011**
2524	OM 401.975	180	06/1992 → 09/1996		55	24	063534699820	**MAN2011**
2524 K	OM 401.975	180	06/1992 → 09/1996		55	24	063534699820	**MAN2011**
2524 L	OM 401.975	180	06/1992 → 09/1996		55	24	063534699820	**MAN2011**
2524,2524 L	OM 401.973, OM 401.975	180 200	06/1992 → 09/1996		55	24	063534699820	**MAN2011**
2527 B	OM 401.973, OM 401.978, OM 401.980	200	03/1991 → 09/1996		55	24	063534699820	**MAN2011**
2527 L	OM 401.973, OM 401.977, OM 401.979	200 230	09/1992 → 08/1994		55	24	063534699820	**MAN2011**
2531 B	OM 401.979	230	12/1990 → 09/1996		55	24	063534699820	**MAN2011**
2531 L	OM 401.972, OM 401.979, OM 401.993	230	12/1990 → 09/1996		55	24	063534699820	**MAN2011**
2531 L	OM 401.979	230	12/1990 → 09/1996		55	24	063534699820	**MAN2011**
2531,2531 L	OM 401.972, OM 401.979, OM 401.993	230	12/1990 → 09/1996		55	24	063534699820	**MAN2011**
2534 K	OM 441.986, OM 441.989, OM 445.920	250	01/1991 → 09/1996		55	24	063534699820	**MAN2011**

		kW ÷ kW		i	A	V	LONG	SHORT
MERCEDES-BENZ								
MK								
2534 S,2534 LS	OM 441.986, OM 441.987, OM 445.920, OM 445.921, OM 445.922	250	01/1991 → 09/1996		55	24	063534699820	**MAN2011**
2534,2534 L	OM 441.986, OM 441.987, OM 441.989, OM 441.991, OM 445.920, OM 445.921, OM 445.922	250	01/1991 → 09/1996		55	24	063534699820	**MAN2011**
NG								
1217 KO	OM 353.950, OM 353.951, OM 353.953	124	05/1983 → 09/1985		55	24	063534699820	**MAN2011**
1222	OM 421.905, OM 421.909	159	11/1986 → 02/1990		55	24	063534699820	**MAN2011**
1222 A	OM 421.905, OM 421.909	159	11/1986 → 10/1990		55	24	063534699820	**MAN2011**
1222 AF	OM 421.906	159	11/1986 → 12/1991		55	24	063534699820	**MAN2011**
1222 F	OM 421.906	159	11/1986 → 12/1991		55	24	063534699820	**MAN2011**
1222 S	OM 421.905	159	11/1986 → 02/1990		55	24	063534699820	**MAN2011**
1414	OM 366.906, OM 366.909	100	11/1986 → 03/1991		55	24	063534699820	**MAN2011**
1414 K	OM 366.906, OM 366.909	100	11/1986 → 03/1991		55	24	063534699820	**MAN2011**
1417 C	OM 366.951, OM 366.952	125	11/1986 → 03/1991		55	24	063534699820	**MAN2011**
1417 CA	OM 366.951, OM 366.952	125	11/1986 → 03/1991		55	24	063534699820	**MAN2011**
1417 CAK	OM 366.951, OM 366.952	125	11/1986 → 03/1991		55	24	063534699820	**MAN2011**
1417 CK	OM 366.951, OM 366.952	125	11/1986 → 03/1991		55	24	063534699820	**MAN2011**
1420 LS	OM 366.983	150	11/1986 → 03/1991		55	24	063534699820	**MAN2011**
1420,1420 L	OM 366.983	150	11/1986 → 03/1991		55	24	063534699820	**MAN2011**
1422 F	OM 421.906	159	11/1986 → 10/1990		55	24	063534699820	**MAN2011**
1422 S, 1422 LS	OM 421.905	159	11/1986 → 10/1990		55	24	063534699820	**MAN2011**
1422,1422 L	OM 421.905	159	11/1986 → 10/1990		55	24	063534699820	**MAN2011**
1425 S,1425 LS	OM 422.909	184	11/1986 → 03/1991		55	24	063534699820	**MAN2011**
1614	OM 366.906	100	11/1986 → 03/1991		55	24	063534699820	**MAN2011**
1614 K	OM 366.909	100	11/1986 → 03/1991		55	24	063534699820	**MAN2011**
1617 C,1617 CL	OM 366.951, OM 366.952	125	11/1986 → 03/1991		55	24	063534699820	**MAN2011**
1617 CAK	OM 366.951, OM 366.952	125	11/1986 → 03/1991		55	24	063534699820	**MAN2011**

		kW ÷ kW		i	A	V	LONG	SHORT
MERCEDES-BENZ								
NG								
1617 CK	OM 366.951	125	11/1986 → 03/1991		55	24	063534699820	**MAN2011**
1617 CS	OM 366.951	125	11/1986 → 03/1991		55	24	063534699820	**MAN2011**
1620,1620 L	OM 366.983	150	11/1986 → 03/1991		55	24	063534699820	**MAN2011**
1622 AK	OM 421.905	159	11/1986 → 10/1989		55	24	063534699820	**MAN2011**
1622 K	OM 421.905	159	11/1986 → 10/1989		55	24	063534699820	**MAN2011**
1622 S	OM 421.905	159	11/1986 → 03/1991		55	24	063534699820	**MAN2011**
1622,1622 L	OM 421.905, OM 441.906, OM 441.907	150 159	11/1986 → 03/1991		55	24	063534699820	**MAN2011**
1625 AK	OM 422.909	184	11/1986 → 11/1989		55	24	063534699820	**MAN2011**
1625 K	OM 422.909	184	11/1986 → 11/1989		55	24	063534699820	**MAN2011**
1625 S,1625 LS	OM 422.909	184	11/1986 → 02/1990		55	24	063534699820	**MAN2011**
1625,1625 L	OM 422.909	184	11/1986 → 02/1990		55	24	063534699820	**MAN2011**
1628 A	OM 422.905, OM 422.906, OM 422.911	206	11/1986 → 05/1989		55	24	063534699820	**MAN2011**
1628 S,1628 LS	OM 422.905, OM 422.906, OM 422.911	206	11/1986 → 05/1989		55	24	063534699820	**MAN2011**
1628,1628 L	OM 422.905, OM 422.906, OM 422.911, OM 422.913	206	11/1986 → 05/1989		55	24	063534699820	**MAN2011**
1633 S,1633 LS	OM 422.952, OM 422.954, OM 422.956, OM 422.957, OM 422.958	243	11/1986 → 05/1987		55	24	063534699820	**MAN2011**
1633,1633 L	OM 422.952, OM 422.954, OM 422.956, OM 422.957, OM 422.958	243	11/1986 → 05/1987		55	24	063534699820	**MAN2011**
1635 K	OM 442.950, OM 442.952	260	11/1986 → 07/1989		55	24	063534699820	**MAN2011**
1635 S,1635 LS	OM 442.950, OM 442.952	260	11/1986 → 07/1989		55	24	063534699820	**MAN2011**
1635,1635 L	OM 442.950, OM 442.952	260	11/1986 → 07/1989		55	24	063534699820	**MAN2011**
1636 S,1636 LS	OM 423.905, OM 423.908	261	11/1986 → 03/1991		55	24	063534699820	**MAN2011**
1636,1636 L	OM 423.905, OM 423.908	261	11/1986 → 03/1991		55	24	063534699820	**MAN2011**
1638	OM 422.953, OM 422.955, OM 422.959	276	11/1986 → 12/1986		55	24	063534699820	**MAN2011**

		kW ÷ kW		i	A	V	LONG	SHORT
MERCEDES-BENZ								
NG								
1638 S,1638 LS	OM 422.953, OM 422.955, OM 422.959	276	11/1986 → 12/1986		55	24	063534699820	**MAN2011**
1644	OM 442.951, OM 442.953, OM 442.980	320	11/1986 → 08/1989		55	24	063534699820	**MAN2011**
1644 S,1644 LS	OM 442.951, OM 442.953, OM 442.980	320	11/1986 → 08/1989		55	24	063534699820	**MAN2011**
1922	OM 421.905	159	11/1986 → 10/1990		55	24	063534699820	**MAN2011**
1922 AK	OM 421.905	159	11/1986 → 03/1991		55	24	063534699820	**MAN2011**
1922 K	OM 421.905	159	11/1986 → 10/1990		55	24	063534699820	**MAN2011**
1922 S	OM 421.905	159	11/1986 → 10/1990		55	24	063534699820	**MAN2011**
1928 A	OM 422.905, OM 422.907, OM 422.911, OM 422.913	206	11/1986 → 03/1991		55	24	063534699820	**MAN2011**
1928 AK	OM 422.905, OM 422.907, OM 422.911, OM 422.913	206	11/1986 → 03/1991		55	24	063534699820	**MAN2011**
1928 AS	OM 422.913	206	11/1986 → 03/1991		55	24	063534699820	**MAN2011**
1928 K	OM 422.905, OM 422.907, OM 422.911, OM 422.913	206	11/1986 → 05/1989		55	24	063534699820	**MAN2011**
1928 S,1928 LS	OM 422.906, OM 422.911	206	11/1986 → 01/1989		55	24	063534699820	**MAN2011**
1928,1928 L	OM 422.905, OM 422.906, OM 422.907, OM 422.911, OM 422.913	206	11/1986 → 03/1991		55	24	063534699820	**MAN2011**
1933	OM 422.952, OM 422.954, OM 422.956, OM 422.957, OM 422.958	243	11/1986 → 03/1991		55	24	063534699820	**MAN2011**
1933 S,1933 LS	OM 422.952, OM 422.954, OM 422.956, OM 422.957, OM 422.958	243	11/1986 → 03/1991		55	24	063534699820	**MAN2011**
1935	OM 442.950, OM 442.952	260	11/1986 → 09/1989		55	24	063534699820	**MAN2011**
1935 AK	OM 442.962	260 269	09/1987 → 03/1991		55	24	063534699820	**MAN2011**
1935 AS	OM 442.962	260 269	09/1987 → 03/1991		55	24	063534699820	**MAN2011**
1935 S,1935 LS	OM 442.950, OM 442.952	260	11/1986 → 09/1989		55	24	063534699820	**MAN2011**

		kW ÷ kW			A	V	LONG	SHORT
MERCEDES-BENZ								
NG								
1936	OM 423.905, OM 423.906, OM 423.908	261	11/1986 → 03/1991		55	24	063534699820	**MAN2011**
1936 AK	OM 423.905, OM 423.906, OM 423.907	261	11/1986 → 03/1991		55	24	063534699820	**MAN2011**
1936 AS	OM 423.905, OM 423.906, OM 423.907	261	11/1986 → 03/1991		55	24	063534699820	**MAN2011**
1936 K	OM 423.905	261	11/1986 → 03/1991		55	24	063534699820	**MAN2011**
1936 S,1936 LS	OM 423.908	261	11/1986 → 03/1991		55	24	063534699820	**MAN2011**
1938	OM 422.953, OM 422.959	276	11/1986 → 06/1990		55	24	063534699820	**MAN2011**
1938 S,1938 LS	OM 422.953, OM 422.955, OM 422.959	276	11/1986 → 06/1990		55	24	063534699820	**MAN2011**
1944	OM 442.951	320	11/1986 → 12/1989		55	24	063534699820	**MAN2011**
1944 S,1944 LS	OM 442.951	320	11/1986 → 12/1989		55	24	063534699820	**MAN2011**
2025 S	OM 422.909	184	11/1986 → 03/1991		55	24	063534699820	**MAN2011**
2028 A	OM 442.950, OM 442.962	260	11/1986 → 06/1989		55	24	063534699820	**MAN2011**
2028 A	OM 422.907, OM 422.911, OM 422.913, OM 422.916	206	11/1986 → 06/1989		55	24	063534699820	**MAN2011**
2028 LS	OM 422.905, OM 422.906, OM 422.910, OM 422.911	206	11/1986 → 06/1989		55	24	063534699820	**MAN2011**
2033 LS	OM 422.952, OM 422.956	243	11/1986 → 05/1987		55	24	063534699820	**MAN2011**
2035 S,2035 LS	OM 442.950, OM 442.952, OM 442.958	260	11/1986 → 07/1989		55	24	063534699820	**MAN2011**
2036 LS	OM 423.905, OM 423.908	261	11/1986 → 03/1991		55	24	063534699820	**MAN2011**
2220,2220 L	OM 366.983	150	11/1986 → 03/1991		55	24	063534699820	**MAN2011**
2222	OM 421.905	159	11/1986 → 03/1991		55	24	063534699820	**MAN2011**
2222 B	OM 421.905, OM 421.907, OM 441.906	150 159	11/1986 → 03/1991		55	24	063534699820	**MAN2011**
2222 K	OM 421.905	159	11/1986 → 10/1989		55	24	063534699820	**MAN2011**
2222 K	OM 421.905	159	11/1986 → 03/1991		55	24	063534699820	**MAN2011**
2222 L	OM 421.905, OM 441.905, OM 441.917	159 165	11/1986 → 03/1991		55	24	063534699820	**MAN2011**
2222,2222 L	OM 421.905	159	11/1986 → 03/1991		55	24	063534699820	**MAN2011**

		kW ÷ kW		i	A	V	MAGNETI MARELLI LONG	MAGNETI MARELLI SHORT
MERCEDES-BENZ								
NG								
2225	OM 422.909	184	11/1986 → 06/1989		55	24	063534699820	**MAN2011**
2225	OM 422.909	184	11/1986 → 03/1991		55	24	063534699820	**MAN2011**
2225 B	OM 422.912	184	11/1986 → 03/1991		55	24	063534699820	**MAN2011**
2225 L	OM 422.909	184	11/1986 → 03/1991		55	24	063534699820	**MAN2011**
2228	OM 422.905, OM 422.911	206	11/1986 → 03/1991		55	24	063534699820	**MAN2011**
2228 S	OM 422.905, OM 422.911	206	11/1986 → 03/1991		55	24	063534699820	**MAN2011**
2228,2228 L	OM 422.905, OM 422.906, OM 422.911	206	11/1986 → 03/1991		55	24	063534699820	**MAN2011**
2233	OM 422.952, OM 422.954, OM 422.957	243	11/1986 → 05/1987		55	24	063534699820	**MAN2011**
2233 S	OM 422.957, OM 422.958	243	11/1986 → 05/1987		55	24	063534699820	**MAN2011**
2233,2233 L	OM 422.952, OM 422.954, OM 422.957, OM 422.958	243	11/1986 → 05/1987		55	24	063534699820	**MAN2011**
2235 K	OM 442.950	260	11/1986 → 07/1989		55	24	063534699820	**MAN2011**
2235 S, 2235 LS	OM 442.950	260	11/1986 → 07/1989		55	24	063534699820	**MAN2011**
2235,2235 L	OM 442.950	260	11/1986 → 07/1989		55	24	063534699820	**MAN2011**
2236	OM 423.905, OM 423.908	261	11/1986 → 03/1991		55	24	063534699820	**MAN2011**
2236 S	OM 423.905, OM 423.908	261	11/1986 → 03/1991		55	24	063534699820	**MAN2011**
2238 S	OM 422.953, OM 422.955, OM 422.959	276	11/1986 → 12/1986		55	24	063534699820	**MAN2011**
2238,2238 L	OM 422.953, OM 422.955, OM 422.959	276	11/1986 → 12/1986		55	24	063534699820	**MAN2011**
2244 S	OM 442.951	320	11/1986 → 07/1989		55	24	063534699820	**MAN2011**
2244,2244 L	OM 442.951, OM 442.953, OM 442.980	320	11/1986 → 07/1989		55	24	063534699820	**MAN2011**
2422	OM 441.905, OM 441.917	160 165	11/1986 → 06/1989		55	24	063534699820	**MAN2011**
2422 K	OM 421.905	159	11/1986 → 06/1989		55	24	063534699820	**MAN2011**
2433	OM 422.954, OM 422.957	243	11/1986 → 03/1991		55	24	063534699820	**MAN2011**
2433	OM 422.954, OM 422.957	243	11/1986 → 11/1991		55	24	063534699820	**MAN2011**
2438	OM 422.953, OM 422.955, OM 422.959	276	11/1986 → 12/1986		55	24	063534699820	**MAN2011**

		kW ÷ kW			A	V	LONG	SHORT
MERCEDES-BENZ								
NG								
2438 L	OM 422.955, OM 422.959	269 276	11/1986 → 12/1986		55	24	063534699820	**MAN2011**
2444 LS	OM 442.951, OM 442.953, OM 442.980	320	11/1986 → 02/1991		55	24	063534699820	**MAN2011**
2528 A	OM 422.907, OM 422.911, OM 422.916	206	11/1986 → 03/1991		55	24	063534699820	**MAN2011**
2528 AK	OM 422.907, OM 422.911, OM 422.913, OM 422.916	206	11/1986 → 03/1991		55	24	063534699820	**MAN2011**
2536 AK	OM 423.905, OM 423.907	261	11/1986 → 03/1991		55	24	063534699820	**MAN2011**
2628	OM 422.905, OM 422.911	206	11/1986 → 03/1991		55	24	063534699820	**MAN2011**
2628 A	OM 443.940	331	01/1990 → 03/1991		55	24	063534699820	**MAN2011**
2628 A	OM 422.907, OM 422.913, OM 422.916	206	11/1986 → 03/1991		55	24	063534699820	**MAN2011**
2628 AK	OM 422.913	206	11/1986 → 03/1991		55	24	063534699820	**MAN2011**
2628 AS	OM 422.907, OM 422.913	206	11/1986 → 03/1991		55	24	063534699820	**MAN2011**
2628 B	OM 422.905, OM 422.911	206	11/1986 → 08/1989		55	24	063534699820	**MAN2011**
2628 K	OM 422.905, OM 422.911	206	11/1986 → 03/1991		55	24	063534699820	**MAN2011**
2628 S	OM 422.905, OM 422.911	206	11/1986 → 03/1991		55	24	063534699820	**MAN2011**
2633	OM 422.952, OM 422.954, OM 422.957	243	11/1986 → 05/1987		55	24	063534699820	**MAN2011**
2633 S	OM 422.952, OM 422.954, OM 422.956	243	11/1986 → 05/1987		55	24	063534699820	**MAN2011**
2635	OM 442.950, OM 442.952	260	11/1986 → 03/1991		55	24	063534699820	**MAN2011**
2635 A	OM 442.962	269	09/1987 → 03/1991		55	24	063534699820	**MAN2011**
2635 AK	OM 442.962	269	09/1987 → 03/1991		55	24	063534699820	**MAN2011**
2635 AS	OM 442.962	269	09/1987 → 03/1991		55	24	063534699820	**MAN2011**
2635 S	OM 442.950, OM 442.952	260	11/1986 → 03/1991		55	24	063534699820	**MAN2011**
2636	OM 423.905	261	11/1986 → 03/1991		55	24	063534699820	**MAN2011**
2636 A	OM 423.907	261	11/1986 → 03/1991		55	24	063534699820	**MAN2011**

		kW ÷ kW		i	A	V	LONG	SHORT
MERCEDES-BENZ								
NG								
2636 AK	OM 423.907	261	11/1986 → 03/1991		55	24	063534699820	**MAN2011**
2636 AS	OM 423.907	261	11/1986 → 03/1991		55	24	063534699820	**MAN2011**
2636 K	OM 423.905	261	11/1986 → 03/1991		55	24	063534699820	**MAN2011**
2636 S	OM 423.905	261	11/1986 → 03/1991		55	24	063534699820	**MAN2011**
2638	OM 422.953, OM 422.955, OM 422.959	276	11/1986 → 12/1986		55	24	063534699820	**MAN2011**
2638 S	OM 422.953, OM 422.955	276	11/1986 → 12/1986		55	24	063534699820	**MAN2011**
2644	OM 442.951, OM 442.953, OM 442.980	320	11/1986 → 02/1990		55	24	063534699820	**MAN2011**
2644 S	OM 442.953, OM 442.980	320	11/1986 → 02/1990		55	24	063534699820	**MAN2011**
3025 B	OM 422.909, OM 422.912	184	11/1986 → 07/1987		55	24	063534699820	**MAN2011**
3025 B	OM 422.919, OM 422.920	184 206	11/1986 → 07/1987		55	24	063534699820	**MAN2011**
3025 K	OM 422.920	184	11/1986 → 07/1987		55	24	063534699820	**MAN2011**
3025 K	OM 422.909	184	11/1986 → 07/1987		55	24	063534699820	**MAN2011**
3028	OM 422.905, OM 422.911	206	11/1986 → 08/1989		55	24	063534699820	**MAN2011**
3028 B	OM 422.919	206	11/1986 → 07/1987		55	24	063534699820	**MAN2011**
3028 K	OM 422.919	206	11/1986 → 07/1987		55	24	063534699820	**MAN2011**
3033	OM 422.954, OM 422.957	243	11/1986 → 05/1987		55	24	063534699820	**MAN2011**
3036	OM 423.905, OM 423.908	261	11/1986 → 08/1989		55	24	063534699820	**MAN2011**
3038	OM 422.953, OM 422.955, OM 422.959	276	11/1986 → 12/1986		55	24	063534699820	**MAN2011**
3228 B	OM 422.919, OM 422.921	206	07/1987 → 03/1991		55	24	063534699820	**MAN2011**
3228 K	OM 422.919, OM 422.921	206	07/1987 → 03/1991		55	24	063534699820	**MAN2011**
3235	OM 442.944	260 269	07/1988 → 08/1994		55	24	063534699820	**MAN2011**
3250 A	OM 423.950, OM 423.951	368	11/1986 → 08/1994		55	24	063534699820	**MAN2011**
3250 AF	OM 423.950, OM 423.951	368	11/1986 → 08/1994		55	24	063534699820	**MAN2011**
3328	OM 422.905, OM 422.911, OM 422.913	206	11/1986 → 07/1987		55	24	063534699820	**MAN2011**

		kW ÷ kW		i	A	V	MAGNETI MARELLI LONG	MAGNETI MARELLI SHORT
MERCEDES-BENZ								
NG								
3328 B	OM 422.905, OM 422.907, OM 422.911, OM 422.913, OM 422.916	206	11/1986 → 07/1987		55	24	063534699820	**MAN2011**
3328 B	OM 422.914, OM 422.919	206	11/1986 → 07/1987		55	24	063534699820	**MAN2011**
3328 K	OM 422.914, OM 422.919	206	11/1986 → 07/1987		55	24	063534699820	**MAN2011**
3333	OM 422.954	243	11/1986 → 11/1991		55	24	063534699820	**MAN2011**
3333 B	OM 422.954	243	11/1986 → 11/1991		55	24	063534699820	**MAN2011**
3333 K	OM 422.954	243	11/1986 → 11/1991		55	24	063534699820	**MAN2011**
3336	OM 423.905, OM 423.907	261	11/1986 → 11/1991		55	24	063534699820	**MAN2011**
3336 A	OM 423.905, OM 423.907	261	11/1986 → 03/1991		55	24	063534699820	**MAN2011**
3336 AK	OM 423.907	261	11/1986 → 11/1991		55	24	063534699820	**MAN2011**
3336 K	OM 423.905	261	11/1986 → 11/1991		55	24	063534699820	**MAN2011**
3336 S	OM 423.905	261	11/1986 → 11/1991		55	24	063534699820	**MAN2011**
3338	OM 442.950	260	11/1986 → 12/1986		55	24	063534699820	**MAN2011**
3528	OM 422.905, OM 422.919	206	07/1987 → 07/1987		55	24	063534699820	**MAN2011**
3528 B	OM 422.919	206	07/1987 → 09/1989		55	24	063534699820	**MAN2011**
3528 K	OM 422.919	206	07/1987 → 07/1987		55	24	063534699820	**MAN2011**
3528 K	OM 422.919	206	07/1987 → 09/1989		55	24	063534699820	**MAN2011**
3535 AK	OM 442.950, OM 442.952	260	09/1987 → 02/1990		55	24	063534699820	**MAN2011**
3535 K	OM 442.950, OM 442.959	260 269	09/1987 → 01/1989		55	24	063534699820	**MAN2011**
3544	OM 442.951, OM 442.953, OM 442.980	320	09/1987 → 03/1992		55	24	063534699820	**MAN2011**
3544 S	OM 442.951, OM 442.980	320	09/1987 → 03/1992		55	24	063534699820	**MAN2011**
3836 AK	OM 423.907	261	11/1986 → 03/1991		55	24	063534699820	**MAN2011**
3850 A	OM 423.950	368	11/1986 → 08/1994		55	24	063534699820	**MAN2011**
O 309								
O 309 B	M 115.921	63	11/1986 → 02/1989		55	24	063534699820	**MAN2011**
O 309 D	OM 314.946, OM 314.948, OM 314.959, OM 314.962, OM 314.963	63	11/1986 → 02/1989		55	24	063534699820	**MAN2011**
O 309 D	OM 353.963, OM 353.966, OM 353.968, OM 353.969	96	11/1986 → 02/1989		55	24	063534699820	**MAN2011**

		kW ÷ kW		i	A	V	LONG	SHORT
MERCEDES-BENZ								
SK								
1728, 1729, 1729 L	OM 442.906, OM 442.907, OM 442.908, OM 442.923, OM 442.925	210 218	07/1988 → 08/1994		55	24	063534699820	**MAN2011**
1729 AK	OM 442.907, OM 442.926	213	07/1988 → 09/1993		55	24	063534699820	**MAN2011**
1729 K	OM 442.906, OM 442.907, OM 442.925	213 218	03/1991 → 08/1994		55	24	063534699820	**MAN2011**
1729 S,1729 LS	OM 442.906, OM 442.907, OM 442.923, OM 442.925	210 218	07/1988 → 08/1994		55	24	063534699820	**MAN2011**
1735 AK	OM 442.942, OM 442.966	260 269	08/1989 → 08/1994		55	24	063534699820	**MAN2011**
1735 K	OM 440.940, OM 442.944, OM 442.963, OM 442.964, OM 442.976	250 269	03/1991 → 08/1994		55	24	063534699820	**MAN2011**
1735 L	OM 442.906	218	07/1988 → 08/1994		55	24	063534699820	**MAN2011**
1735 S,1735 LS	OM 442.944, OM 442.963, OM 442.964, OM 442.976	260 269	03/1991 → 08/1994		55	24	063534699820	**MAN2011**
1735,1735 L	OM 442.944, OM 442.963, OM 442.964, OM 442.976	260 269	03/1991 → 08/1994		55	24	063534699820	**MAN2011**
1748 S,1748 LS	OM 442.985, OM 442.989	353 362	03/1991 → 07/1992		55	24	063534699820	**MAN2011**
1748,1748 L	OM 442.985, OM 442.989	353 362	03/1991 → 07/1992		55	24	063534699820	**MAN2011**
1831 AK	OM 401.986	230	05/1991 → 09/1996		55	24	063534699820	**MAN2011**
1831 AK	OM 445.930	230	01/1994 → 09/1996		55	24	063534699820	**MAN2011**
1831 K	OM 441.986, OM 441.993, OM 445.929, OM 445.937	230 250	07/1992 → 09/1996		55	24	063534699820	**MAN2011**
1831 K	OM 401.972, OM 401.979, OM 401.993	230	07/1992 → 09/1996		55	24	063534699820	**MAN2011**
1831 S,1831 LS	OM 445.929, OM 445.937	230	07/1987 → 09/1996		55	24	063534699820	**MAN2011**
1831 S,1831 LS	OM 401.972, OM 401.979, OM 401.993	230	07/1992 → 08/1996		55	24	063534699820	**MAN2011**
1831,1831 L	OM 445.929, OM 445.937	230	07/1987 → 09/1996		55	24	063534699820	**MAN2011**

		kW ÷ kW		i	A	V	LONG	SHORT
MERCEDES-BENZ								
SK								
1831,1831 L	OM 401.972, OM 401.979, OM 401.993	230	07/1992 → 08/1996		55	24	063534699820	**MAN2011**
1838 AK	OM 402.978, OM 402.996	280	12/1992 → 09/1996		55	24	063534699820	**MAN2011**
1838 AK	OM 446.927	280	01/1994 → 09/1996		55	24	063534699820	**MAN2011**
1838 K	OM 402.971, OM 402.975, OM 402.985	280	03/1991 → 09/1996		55	24	063534699820	**MAN2011**
1838 S,1838 LS	OM 446.924, OM 446.925	280	03/1991 → 09/1996		55	24	063534699820	**MAN2011**
1838 S,1838 LS	OM 402.971, OM 402.972, OM 402.975, OM 402.985, OM 402.986	280	03/1991 → 09/1996		55	24	063534699820	**MAN2011**
1838,1838 L	OM 402.971, OM 402.972, OM 402.975, OM 402.985, OM 402.986	280	03/1991 → 09/1996		55	24	063534699820	**MAN2011**
1840 LS	OM 402.971	280	07/1991 → 07/1992		55	24	063534699820	**MAN2011**
1844 S,1844 LS	OM 440.970, OM 440.978, OM 446.922	320	11/1991 → 08/1996		55	24	063534699820	**MAN2011**
1844,1844 L	OM 440.970, OM 440.978, OM 446.922	320	11/1991 → 08/1996		55	24	063534699820	**MAN2011**
1922	OM 441.905, OM 441.914, OM 441.923	160 165	03/1991 → 08/1994		55	24	063534699820	**MAN2011**
1922 AK	OM 441.914, OM 441.926	160 165	03/1991 → 08/1994		55	24	063534699820	**MAN2011**
1922 K	OM 441.905, OM 441.914, OM 441.923	160 165	03/1991 → 08/1994		55	24	063534699820	**MAN2011**
1922 S	OM 441.905, OM 441.914, OM 441.923	160 165	03/1991 → 08/1994		55	24	063534699820	**MAN2011**
1929 A	OM 443.940	340	03/1991 → 08/1994		55	24	063534699820	**MAN2011**
1929 AS	OM 442.906, OM 442.907, OM 442.926, OM 442.929	213 218	03/1991 → 08/1994		55	24	063534699820	**MAN2011**
1935	OM 442.943, OM 442.944, OM 442.963, OM 442.966, OM 442.971, OM 442.976	260 269	03/1991 → 08/1994		55	24	063534699820	**MAN2011**

		kW ÷ kW		i	A	V	LONG	SHORT
MERCEDES-BENZ								
SK								
1935 AK	OM 442.942, OM 442.966, OM 442.971, OM 442.972, OM 442.978	250 269	03/1991 → 08/1994		55	24	063534699820	**MAN2011**
1935 AS	OM 442.942, OM 442.966, OM 442.978	250 269	03/1991 → 08/1994		55	24	063534699820	**MAN2011**
1935 K	OM 440.940, OM 442.943, OM 442.944, OM 442.963, OM 442.964, OM 442.977	250 269	03/1991 → 08/1994		55	24	063534699820	**MAN2011**
1935 S	OM 442.943, OM 442.944, OM 442.963, OM 442.976	269	03/1991 → 08/1994		55	24	063534699820	**MAN2011**
1945 AK	OM 443.940	340	07/1988 → 08/1994		55	24	063534699820	**MAN2011**
1948	OM 442.982, OM 442.984, OM 442.985, OM 442.989	353 362	03/1991 → 07/1992		55	24	063534699820	**MAN2011**
2024	OM 401.975	180	02/1993 → 08/1996		55	24	063534699820	**MAN2011**
2024	OM 445.924	180	01/1994 → 08/1996		55	24	063534699820	**MAN2011**
2024 AK	OM 401.984	180	02/1993 → 08/1996		55	24	063534699820	**MAN2011**
2024 AK	OM 445.925	180	01/1994 → 08/1996		55	24	063534699820	**MAN2011**
2024 K	OM 401.975	180	02/1993 → 08/1996		55	24	063534699820	**MAN2011**
2024 K	OM 445.924	180	01/1994 → 08/1996		55	24	063534699820	**MAN2011**
2027 AK	OM 401.989	200	02/1993 → 08/1996		55	24	063534699820	**MAN2011**
2027 AK	OM 445.933	200	02/1993 → 08/1996		55	24	063534699820	**MAN2011**
2031	OM 401.972, OM 401.979, OM 401.993	230	03/1992 → 09/1996		55	24	063534699820	**MAN2011**
2031 A	OM 401.986	230	03/1992 → 08/1996		55	24	063534699820	**MAN2011**
2031 A	OM 445.930	230	01/1994 → 08/1996		55	24	063534699820	**MAN2011**
2031 A	OM 402.978, OM 402.996	280	03/1992 → 08/1996		55	24	063534699820	**MAN2011**
2031 AS	OM 401.986	230	03/1992 → 08/1996		55	24	063534699820	**MAN2011**
2031 K	OM 401.972, OM 401.979, OM 401.993	230	03/1992 → 08/1996		55	24	063534699820	**MAN2011**
2031 K	OM 445.929	230	03/1992 → 08/1996		55	24	063534699820	**MAN2011**
2031 S	OM 401.972, OM 401.979, OM 401.993	230	03/1992 → 08/1996		55	24	063534699820	**MAN2011**
2038	OM 402.971, OM 402.972, OM 402.985, OM 402.986, OM 402.996	280	11/1991 → 08/1996		55	24	063534699820	**MAN2011**

		kW ÷ kW			A	V	LONG	SHORT
MERCEDES-BENZ								
SK								
2038	OM 446.925, OM 446.927	280	12/1992 → 08/1996		55	24	063534699820	**MAN2011**
2038 AS	OM 402.978	280	12/1992 → 08/1996		55	24	063534699820	**MAN2011**
2038 AS	OM 446.927	280	01/1994 → 08/1996		55	24	063534699820	**MAN2011**
2038 S	OM 402.971, OM 402.985	280	11/1991 → 08/1996		55	24	063534699820	**MAN2011**
2050	OM 442.985, OM 442.989, OM 442.992, OM 442.997, OM 446.920	362 390	03/1991 → 09/1996		55	24	063534699820	**MAN2011**
2050 S	OM 440.976, OM 442.985, OM 442.989, OM 442.992, OM 442.997, OM 446.920	362 390	03/1991 → 09/1996		55	24	063534699820	**MAN2011**
2055 AF	OM 442.997	370	01/1992 → 09/1996		55	24	063534699820	**MAN2011**
2422 L	OM 441.905, OM 441.923	160 165	07/1987 → 06/1989		55	24	063534699820	**MAN2011**
2429	OM 442.906, OM 442.907, OM 442.923, OM 442.925	210 218	03/1991 → 08/1994		55	24	063534699820	**MAN2011**
2429 K	OM 442.906, OM 442.907, OM 442.923, OM 442.925	210 218	03/1991 → 08/1994		55	24	063534699820	**MAN2011**
2429 S	OM 442.906, OM 442.907, OM 442.925	213 218	03/1991 → 08/1994		55	24	063534699820	**MAN2011**
2429 S,2429 LS	OM 442.906, OM 442.907, OM 442.925	213 218	03/1991 → 08/1994		55	24	063534699820	**MAN2011**
2429, 2429 L	OM 442.906, OM 442.907, OM 442.908, OM 442.916, OM 442.923, OM 442.925	210 218	03/1991 → 08/1994		55	24	063534699820	**MAN2011**
2429,2429 L	OM 442.906, OM 442.907, OM 442.925	213 218	03/1991 → 08/1994		55	24	063534699820	**MAN2011**
2435	OM 442.943, OM 442.944, OM 442.963, OM 442.964, OM 442.965, OM 442.976	260 269	03/1991 → 08/1994		55	24	063534699820	**MAN2011**

		kW ÷ kW		i	A	V	LONG	SHORT
MERCEDES-BENZ								
SK								
2435 K	OM 440.940, OM 442.943, OM 442.944, OM 442.963, OM 442.964, OM 442.965	250 269	03/1991 → 08/1994		55	24	063534699820	**MAN2011**
2435 LS	OM 442.944, OM 442.963, OM 442.976	260	03/1991 → 08/1994		55	24	063534699820	**MAN2011**
2435 S	OM 440.940, OM 442.943, OM 442.944, OM 442.963, OM 442.964, OM 442.965, OM 442.976	250 269	03/1991 → 08/1994		55	24	063534699820	**MAN2011**
2435 S,2435 LS	OM 442.943, OM 442.944, OM 442.963, OM 442.964, OM 442.965, OM 442.968, OM 442.976	260 269	03/1991 → 08/1994		55	24	063534699820	**MAN2011**
2435,2435 L	OM 442.943, OM 442.944, OM 442.963, OM 442.964, OM 442.965, OM 442.968, OM 442.976	260 269	03/1991 → 08/1994		55	24	063534699820	**MAN2011**
2448	OM 442.985, OM 442.992	353 362	07/1988 → 07/1992		55	24	063534699820	**MAN2011**
2448 LS	OM 442.984, OM 442.985, OM 442.989	353 362	07/1988 → 07/1992		55	24	063534699820	**MAN2011**
2448 S	OM 442.985, OM 442.989, OM 442.992	353 362	07/1988 → 07/1992		55	24	063534699820	**MAN2011**
2448,2448 L	OM 442.984, OM 442.985, OM 442.989	353 362	07/1988 → 07/1992		55	24	063534699820	**MAN2011**
2531	OM 401.986	230	05/1991 → 09/1996		55	24	063534699820	**MAN2011**
2531, 2531 L	OM 401.979, OM 401.986, OM 401.993	230	03/1991 → 09/1996		55	24	063534699820	**MAN2011**
2531, 2531 L	OM 445.929, OM 445.930, OM 445.937	230	03/1991 → 09/1996		55	24	063534699820	**MAN2011**
2538	OM 440.971, OM 440.981, OM 442.997	370	03/1991 → 08/1996		55	24	063534699820	**MAN2011**

		kW ÷ kW		i	A	V	LONG	SHORT
MERCEDES-BENZ								
SK								
2538	OM 440.970, OM 440.978, OM 440.980	320	03/1991 → 08/1996		55	24	063534699820	**MAN2011**
2538	OM 440.971, OM 440.981	370	03/1991 → 08/1996		55	24	063534699820	**MAN2011**
2538 K, 2538 LK	OM 440.971, OM 440.981, OM 442.989, OM 442.997	362 370	03/1991 → 08/1996		55	24	063534699820	**MAN2011**
2538 K, 2538 LK	OM 440.970, OM 440.978, OM 440.980	320	03/1991 → 08/1996		55	24	063534699820	**MAN2011**
2538 S	OM 440.971, OM 440.981	370	03/1991 → 08/1996		55	24	063534699820	**MAN2011**
2538 S,2538 LS	OM 440.970, OM 440.978, OM 440.980, OM 446.942, OM 446.948	320	03/1991 → 08/1996		55	24	063534699820	**MAN2011**
2538,2538 L	OM 440.970, OM 440.978, OM 440.980	320	03/1991 → 08/1996		55	24	063534699820	**MAN2011**
2544	OM 440.970, OM 440.978	320	01/1994 → 08/1996		55	24	063534699820	**MAN2011**
2544 LS	OM 440.970, OM 440.978, OM 446.942	320	01/1992 → 08/1996		55	24	063534699820	**MAN2011**
2544 S	OM 440.970	320	01/1992 → 08/1994		55	24	063534699820	**MAN2011**
2544 S	OM 440.970, OM 440.972, OM 446.922	320	01/1992 → 08/1996		55	24	063534699820	**MAN2011**
2544, 2544 L	OM 440.970, OM 440.978, OM 446.922	320	01/1992 → 08/1996		55	24	063534699820	**MAN2011**
2544,2544 L	OM 440.970, OM 440.978, OM 446.922	320	01/1992 → 08/1996		55	24	063534699820	**MAN2011**
2550	OM 440.971, OM 440.973	370 390	07/1991 → 08/1996		55	24	063534699820	**MAN2011**
2550 S, 2550 LS	OM 440.971, OM 440.973, OM 442.997, OM 442.998, OM 446.920	370 390	07/1991 → 08/1996		55	24	063534699820	**MAN2011**
2550,2550 L	OM 440.971, OM 440.973, OM 442.997, OM 442.998, OM 446.920	370 390	01/1991 → 08/1996		55	24	063534699820	**MAN2011**

		kW ÷ kW		i	A	V	LONG	SHORT
MERCEDES-BENZ								
SK								
2629	OM 442.906, OM 442.907, OM 442.917, OM 442.925, OM 442.926, OM 442.929	213 218	07/1988 → 08/1994		55	24	063534699820	**MAN2011**
2629	OM 442.959	269	07/1988 → 08/1994		55	24	063534699820	**MAN2011**
2629 A	OM 440.970	320	07/1988 → 08/1994		55	24	063534699820	**MAN2011**
2629 A	OM 440.971, OM 442.989, OM 442.997	362 370	07/1988 → 08/1994		55	24	063534699820	**MAN2011**
2629 A	OM 442.942, OM 442.959, OM 442.966	269	07/1988 → 08/1994		55	24	063534699820	**MAN2011**
2629 A	OM 442.907, OM 442.926	213 218	07/1988 → 08/1994		55	24	063534699820	**MAN2011**
2629 A	OM 402.982	280	07/1988 → 08/1994		55	24	063534699820	**MAN2011**
2629 AK	OM 442.907, OM 442.926	213 218	07/1988 → 08/1994		55	24	063534699820	**MAN2011**
2629 AS	OM 442.907, OM 442.926	213 218	07/1988 → 08/1994		55	24	063534699820	**MAN2011**
2629 B	OM 442.906, OM 442.907, OM 442.917, OM 442.925, OM 442.926, OM 442.929	213 218	07/1988 → 08/1994		55	24	063534699820	**MAN2011**
2629 K	OM 442.906, OM 442.907, OM 442.917, OM 442.925, OM 442.926, OM 442.929	213 218	07/1988 → 08/1994		55	24	063534699820	**MAN2011**
2629 S	OM 442.906, OM 442.907, OM 442.917, OM 442.925, OM 442.926, OM 442.929	213 218	07/1988 → 08/1994		55	24	063534699820	**MAN2011**
2631	OM 401.972, OM 401.979, OM 401.981, OM 401.987, OM 401.993	230	06/1992 → 08/1996		55	24	063534699820	**MAN2011**
2631 A	OM 401.986	230	06/1992 → 08/1996		55	24	063534699820	**MAN2011**
2631 AK, 2634 AK	OM 401.986	230	06/1992 → 08/1996		55	24	063534699820	**MAN2011**
2631 AS	OM 401.986	230	06/1992 → 08/1996		55	24	063534699820	**MAN2011**
2631 B	OM 401.972, OM 401.979, OM 401.981, OM 401.987, OM 401.993	230	06/1992 → 08/1996		55	24	063534699820	**MAN2011**

		kW ÷ kW		i	A	V	LONG	SHORT
MERCEDES-BENZ								
SK								
2631 S	OM 401.972, OM 401.979, OM 401.981, OM 401.987, OM 401.993	230	06/1992 → 08/1996		55	24	063534699820	**MAN2011**
2635	OM 442.944, OM 442.964, OM 442.966, OM 442.976	260 269	07/1988 → 08/1994		55	24	063534699820	**MAN2011**
2635 A	OM 442.942, OM 442.966, OM 442.972	260 269	02/1990 → 08/1994		55	24	063534699820	**MAN2011**
2635 AK	OM 440.971, OM 440.973, OM 442.989, OM 442.997	362 370	02/1990 → 08/1994		55	24	063534699820	**MAN2011**
2635 AK	OM 440.941, OM 440.942, OM 442.942, OM 442.966, OM 442.972	250 269	02/1990 → 08/1994		55	24	063534699820	**MAN2011**
2635 AS	OM 440.941, OM 440.942, OM 442.942, OM 442.966, OM 442.972	250 269	02/1992 → 08/1994		55	24	063534699820	**MAN2011**
2635 K	OM 440.940, OM 442.944, OM 442.964, OM 442.966	250 269	07/1988 → 08/1994		55	24	063534699820	**MAN2011**
2635 S	OM 442.989, OM 442.994, OM 442.997	362 370	07/1988 → 08/1994		55	24	063534699820	**MAN2011**
2635 S	OM 440.940, OM 442.944, OM 442.964, OM 442.966	250 269	07/1988 → 08/1994		55	24	063534699820	**MAN2011**
2638 A	OM 402.975, OM 402.978, OM 402.996	280	09/1991 → 09/1996		55	24	063534699820	**MAN2011**
2638 A	OM 446.927	280	09/1991 → 09/1996		55	24	063534699820	**MAN2011**
2638 A	OM 440.970, OM 440.979	320	09/1991 → 09/1996		55	24	063534699820	**MAN2011**
2638 AK	OM 440.970, OM 440.979, OM 446.936	320	07/1992 → 09/1996		55	24	063534699820	**MAN2011**
2638 AK	OM 402.975, OM 402.978, OM 402.996	280	07/1992 → 09/1996		55	24	063534699820	**MAN2011**
2638 AS	OM 440.982	370	07/1992 → 09/1996		55	24	063534699820	**MAN2011**

		kW ÷ kW		i	A	V	LONG	SHORT
MERCEDES-BENZ								
SK								
2638 AS	OM 440.970, OM 440.979, OM 446.936	320	07/1992 → 09/1996		55	24	063534699820	**MAN2011**
2638 AS	OM 402.975, OM 402.978, OM 402.996	280	07/1992 → 09/1996		55	24	063534699820	**MAN2011**
2638 K	OM 440.981, OM 442.997	370	09/1991 → 08/1996		55	24	063534699820	**MAN2011**
2638 K	OM 442.989	362	09/1991 → 08/1996		55	24	063534699820	**MAN2011**
2638 K	OM 440.970, OM 440.978	320	09/1991 → 08/1996		55	24	063534699820	**MAN2011**
2638 K	OM 402.971, OM 402.972, OM 402.975, OM 402.985, OM 402.986	280	09/1991 → 08/1996		55	24	063534699820	**MAN2011**
2638 K	OM 440.990, OM 446.924, OM 446.925, OM 446.926	280	09/1991 → 08/1996		55	24	063534699820	**MAN2011**
2638, 2638 L	OM 402.971, OM 402.972, OM 402.975, OM 402.985, OM 402.986	280	09/1991 → 08/1996		55	24	063534699820	**MAN2011**
2644 A	OM 440.970, OM 440.979, OM 446.936	320	01/1992 → 09/1996		55	24	063534699820	**MAN2011**
2644 S	OM 440.970, OM 446.922	320	01/1992 → 09/1996		55	24	063534699820	**MAN2011**
2644, 2644 L	OM 440.970, OM 440.978, OM 446.922	320	01/1992 → 09/1996		55	24	063534699820	**MAN2011**
2648 AK	OM 440.973, OM 442.989	362 370	02/1990 → 07/1992		55	24	063534699820	**MAN2011**
2648 S	OM 442.985, OM 442.989, OM 442.992, OM 442.994	353 362	12/1988 → 07/1992		55	24	063534699820	**MAN2011**
2648 S	OM 442.983	329	12/1988 → 07/1992		55	24	063534699820	**MAN2011**
2650 AK	OM 440.971, OM 442.989, OM 442.997	362 370	07/1992 → 08/1994		55	24	063534699820	**MAN2011**
2650 AS	OM 440.971, OM 440.982, OM 442.989, OM 442.997	362 370	01/1994 → 09/1996		55	24	063534699820	**MAN2011**
2650 K	OM 442.989, OM 442.994, OM 442.997	362 370	07/1992 → 08/1994		55	24	063534699820	**MAN2011**

		kW ÷ kW			A	V	LONG	SHORT
MERCEDES-BENZ								
SK								
2650 S	OM 440.971, OM 440.973, OM 442.997	370	07/1992 → 09/1996		55	24	063534699820	**MAN2011**
2650, 2650 L	OM 440.973, OM 440.981, OM 442.989, OM 442.997	362 370	07/1992 → 09/1996		55	24	063534699820	**MAN2011**
3053 S	OM 440.976	370	12/1993 → 09/1996		55	24	063534699820	**MAN2011**
3229	OM 442.915, OM 442.916, OM 442.927, OM 442.928	213 218	09/1989 → 08/1994		55	24	063534699820	**MAN2011**
3229 B	OM 442.915, OM 442.916, OM 442.927, OM 442.928	213 218	09/1989 → 07/1992		55	24	063534699820	**MAN2011**
3229 K	OM 442.915, OM 442.916, OM 442.923, OM 442.927, OM 442.928	210 218	09/1989 → 01/1992		55	24	063534699820	**MAN2011**
3233 B	OM 441.982, OM 441.985	250	10/1990 → 07/1992		55	24	063534699820	**MAN2011**
3233 K	OM 441.982	250	10/1990 → 07/1992		55	24	063534699820	**MAN2011**
3234 B	OM 441.988, OM 441.990, OM 441.992, OM 445.922	250	02/1992 → 09/1996		55	24	063534699820	**MAN2011**
3234 K	OM 441.988, OM 441.990, OM 441.992, OM 445.922	250	02/1992 → 09/1996		55	24	063534699820	**MAN2011**
3235	OM 442.944, OM 442.959, OM 442.963, OM 442.976	260 269	10/1988 → 07/1992		55	24	063534699820	**MAN2011**
3235 K	OM 442.950, OM 442.952, OM 442.959	260 269	07/1987 → 07/1992		55	24	063534699820	**MAN2011**
3235 L	OM 442.944, OM 442.963, OM 442.976	260	07/1988 → 08/1994		55	24	063534699820	**MAN2011**
3238	OM 446.924	280	03/1991 → 09/1996		55	24	063534699820	**MAN2011**
3238	OM 402.971, OM 402.973, OM 402.977, OM 402.982, OM 402.987	280	10/1990 → 09/1996		55	24	063534699820	**MAN2011**
3238	OM 402.971, OM 402.975, OM 402.985	280	03/1991 → 09/1996		55	24	063534699820	**MAN2011**

		kW ÷ kW		i	A	V	LONG	SHORT
MERCEDES-BENZ								
SK								
3238	OM 423.905, OM 423.907	261	03/1991 → 09/1996		55	24	063534699820	**MAN2011**
3238	OM 440.971, OM 442.989, OM 442.997	362 370	10/1990 → 09/1996		55	24	063534699820	**MAN2011**
3238 L	OM 446.924, OM 446.925, OM 446.927	280	10/1990 → 09/1996		55	24	063534699820	**MAN2011**
3238 L	OM 402.972, OM 402.985, OM 402.986	280	10/1990 → 09/1996		55	24	063534699820	**MAN2011**
3238, 3238 L	OM 440.970, OM 440.980, OM 446.939	320	03/1991 → 09/1996		55	24	063534699820	**MAN2011**
3244	OM 440.970, OM 440.980, OM 446.939	320	01/1994 → 09/1996		55	24	063534699820	**MAN2011**
3244 L	OM 440.970, OM 446.922	320	03/1991 → 09/1996		55	24	063534699820	**MAN2011**
3535	OM 442.942, OM 442.944, OM 442.959, OM 442.964, OM 442.966	260 269	10/1988 → 08/1994		55	24	063534699820	**MAN2011**
3535 AK	OM 442.946, OM 442.957	266	02/1990 → 08/1994		55	24	063534699820	**MAN2011**
3535 B	OM 442.945, OM 442.959	269	10/1988 → 08/1994		55	24	063534699820	**MAN2011**
3535 K	OM 442.945, OM 442.959	269	10/1988 → 08/1994		55	24	063534699820	**MAN2011**
3535 K	OM 442.989	362	10/1988 → 08/1994		55	24	063534699820	**MAN2011**
3538	OM 402.971, OM 402.972, OM 402.973, OM 402.974, OM 402.975, OM 402.977, OM 402.978, OM 402.982, OM 402.983, OM 402.984, OM 402.985	280	09/1991 → 09/1996		55	24	063534699820	**MAN2011**
3538	OM 402.973, OM 402.978, OM 402.987	280	03/1991 → 09/1996		55	24	063534699820	**MAN2011**
3538 AK	OM 402.973, OM 402.978, OM 402.982, OM 402.983, OM 402.987	280	05/1992 → 09/1996		55	24	063534699820	**MAN2011**

		kW ÷ kW			A	V	LONG	SHORT
MERCEDES-BENZ								
SK								
3538 K	OM 402.973, OM 402.978, OM 402.982, OM 402.983, OM 402.987	280	03/1991 → 09/1996		55	24	063534699820	**MAN2011**
3544	OM 440.970, OM 440.978, OM 446.922	320	07/1992 → 09/1996		55	24	063534699820	**MAN2011**
3544 AK	OM 440.970, OM 440.980, OM 440.985	320	07/1992 → 09/1996		55	24	063534699820	**MAN2011**
3544 K	OM 440.970	320	07/1992 → 09/1996		55	24	063534699820	**MAN2011**
3548	OM 440.975, OM 442.993	362 370	05/1992 → 07/1992		55	24	063534699820	**MAN2011**
3550 K	OM 440.975, OM 440.982, OM 442.997	370	05/1992 → 09/1996		55	24	063534699820	**MAN2011**
3550 S	OM 440.975, OM 442.993, OM 442.997	362 370	05/1992 → 09/1996		55	24	063534699820	**MAN2011**
3550 S, 3553 S	OM 440.975, OM 440.976, OM 442.993, OM 442.997	362 370	05/1992 → 09/1996		55	24	063534699820	**MAN2011**
4850 A	OM 423.950	368	07/1987 → 08/1996		55	24	063534699820	**MAN2011**
MERCEDES-BENZ								
UNIMOG								
U 1550L	OM 356.956	115	01/1996 → 04/2000		55	24	063534699820	**MAN2011**
U 1550L	OM 356.980, OM 357.945	177	03/1990 → 04/2000		55	24	063534699820	**MAN2011**
U 1550L	OM 356.997, OM 357.924, OM 366.984	150 157	05/1988 → 04/2000		55	24	063534699820	**MAN2011**
U 1550L	OM 356.955, OM 356.956	114	01/1992 → 04/2000		55	24	063534699820	**MAN2011**
U 1550L	OM 366.963	125	01/1996 → 04/2000		55	24	063534699820	**MAN2011**
U 1600	OM 356.997, OM 357.924, OM 366.984	150 157	11/1992 → 09/2002		55	24	063534699820	**MAN2011**
U 1600	OM 356.980, OM 357.945	177	05/1991 → 09/2002		55	24	063534699820	**MAN2011**
U 1650,U 1650L	OM 356.980, OM 357.945	177	01/1996 → 02/2001		55	24	063534699820	**MAN2011**
U 1700	OM 356.957, OM 366.963, OM 382.950	122 125	09/1988 → 02/2001		55	24	063534699820	**MAN2011**

		kW ÷ kW		i	A	V	LONG	SHORT
MERCEDES-BENZ								
UNIMOG								
U 1700T	OM 356.957, OM 366.963	122 125	05/1991 → 02/2001		55	24	063534699820	**MAN2011**
U 1750,U 1750L	OM 356.957, OM 356.981, OM 366.963	122 127	09/1988 → 02/2001		55	24	063534699820	**MAN2011**
U 1800	OM 356.998	132	04/1992 → 08/2002		55	24	063534699820	**MAN2011**
U 1800T	OM 356.998	132	04/1992 → 08/2002		55	24	063534699820	**MAN2011**
U 1850,U 1850L	OM 356.998	132	04/1992 → 08/2002		55	24	063534699820	**MAN2011**
U 2100	OM 356.997, OM 366.984	155 157	09/1989 → 02/2001		55	24	063534699820	**MAN2011**
U 2100T	OM 356.997, OM 366.984	155 157	09/1989 → 08/2002		55	24	063534699820	**MAN2011**
U 2150	OM 356.997, OM 366.984	155 157	09/1989 → 02/2001		55	24	063534699820	**MAN2011**
U 2150,U 2150L	OM 356.980, OM 357.945	177	05/1991 → 08/2002		55	24	063534699820	**MAN2011**
U 2150,U 2150L	OM 356.997, OM 357.924, OM 366.984	155 157	05/1991 → 02/2001		55	24	063534699820	**MAN2011**
U 2400	OM 356.980, OM 357.945	177	05/1991 → 08/2002		55	24	063534699820	**MAN2011**
U 2400TG	OM 356.980, OM 357.945	177	07/1993 → 08/2002		55	24	063534699820	**MAN2011**
U 2450,U 2450L	OM 356.980, OM 357.945	177	07/1993 → 08/2002		55	24	063534699820	**MAN2011**
U 2450L	OM 356.980, OM 357.945	177	07/1993 → 08/2002		55	24	063534699820	**MAN2011**
NEOPLAN								
Tourliner								
N 2216 SHD	D 2866 LOH 34	301	11/2003 →		100	24	063535255010	**MAN2026**
N 2216 SHD	D 2876 LOH 03	338	11/2003 →		100	24	063535255010	**MAN2026**
N 2216 SHD	D 2066 LOH 03	294	06/2006 →		100	24	063535255010	**MAN2026**
N 2216 SHD	D 2066 LOH 04	324	06/2006 →		100	24	063535255010	**MAN2026**
N 2216 SHD,SHDL	D 2866 LOH 34	301	11/2003 →		100	24	063535255010	**MAN2026**
N 2216 SHDL	D 2066 LOH 04	324	06/2006 →		100	24	063535255010	**MAN2026**
RENAULT TRUCKS								
Ares								
Ares	MIDR 06.20.45 R41	222	04/1998 →		80	24	063534681400	**MAN2007**
Ares	MIDR 06.20.45 M41	250	04/1998 →		80	24	063534681400	**MAN2007**
Iliade								
GT, GTC, GTE	MIDR 06.20.45 M41	250	04/1998 → 09/2001		80	24	063534681400	**MAN2007**
Kerax								
260.18	MIDR 06.20.45 C/4	188	06/1997 → 02/2001		80	24	063534681400	**MAN2007**

		kW ÷ kW		i	A	V	LONG	SHORT
RENAULT TRUCKS								
Kerax								
260.18/B	MIDR 06.20.45 C/4	188	06/1997 → 02/2001		80	24	063534681400	**MAN2007**
270.18	dCi 11-270	195	01/2001 → 04/2006		80	24	063534681400	**MAN2007**
300.18/B	MIDR 06.20.45 D/41	219	06/1997 → 02/2001		80	24	063534681400	**MAN2007**
300.26/A,300.26/B	MIDR 06.20.45 D/41	219	06/1997 → 02/2001		80	24	063534681400	**MAN2007**
300.26/B	MIDR 06.20.45 D/41	219	06/1997 → 02/2001		80	24	063534681400	**MAN2007**
320.18	dCi 11G	230	01/2001 → 02/2001		80	24	063534681400	**MAN2007**
320.26	dCi 11G	230	01/2001 → 02/2001		80	24	063534681400	**MAN2007**
340.18	MIDR 06.20.45 E/41	249	06/1997 → 02/2001		80	24	063534681400	**MAN2007**
340.18/B	MIDR 06.20.45 E/41	249	06/1997 → 02/2001		80	24	063534681400	**MAN2007**
340.26	MIDR 06.20.45 E/41	249	06/1997 → 01/2001		80	24	063534681400	**MAN2007**
340.26/A,340.26/B	MIDR 06.20.45 E/41	249	06/1997 → 02/2001		80	24	063534681400	**MAN2007**
340.26/B	MIDR 06.20.45 E/41	249	06/1997 → 02/2001		80	24	063534681400	**MAN2007**
340.32/A	MIDR 06.20.45 E/41	249	06/1997 → 02/2001		80	24	063534681400	**MAN2007**
350.34	MIDR 06.23.56 A/3	255	01/2003 → 12/2003		80	24	063534681400	**MAN2007**
370.18	dCi 11E	266	01/2001 → 02/2001		80	24	063534681400	**MAN2007**
370.26	dCi 11E	266	01/2001 → 02/2001		80	24	063534681400	**MAN2007**
370.32	dCi 11E	266	01/2001 → 02/2001		80	24	063534681400	**MAN2007**
385.18	MIDR 06.23.56 A/41	280	02/1998 → 02/2001		80	24	063534681400	**MAN2007**
385.18/B	MIDR 06.23.56 A/41	280	02/1998 → 02/2001		80	24	063534681400	**MAN2007**
385.18T	MIDR 06.23.56 A/41	280	02/1998 → 02/2001		80	24	063534681400	**MAN2007**
385.26	MIDR 06.23.56 A/41	280	02/1998 → 02/2001		80	24	063534681400	**MAN2007**
385.26/A,385.26/B	MIDR 06.23.56 A/41	280	02/1998 → 02/2001		80	24	063534681400	**MAN2007**
385.26/A,385.26/ B,385.26/C	MIDR 06.23.56 A/41	280	02/1998 → 02/2001		80	24	063534681400	**MAN2007**
385.26/B	MIDR 06.23.56 A/41	280	02/1998 → 02/2001		80	24	063534681400	**MAN2007**
385.26T	MIDR 06.23.56 A/41	280	02/1998 → 02/2001		80	24	063534681400	**MAN2007**

		kW ÷ kW		i	A	V	LONG	SHORT
RENAULT TRUCKS								
Kerax								
385.32/A,385.32/B	MIDR 06.23.56 A/41	280	02/1998 → 02/2001		80	24	063534681400	**MAN2007**
385.32/A,385.32/ B,385.32/C	MIDR 06.23.56 A/41	280	02/1998 → 02/2001		80	24	063534681400	**MAN2007**
385.32/B	MIDR 06.23.56 A/41	280	02/1998 → 02/2001		80	24	063534681400	**MAN2007**
400.18	MIDR 06.23.56 B/41	288	01/2000 → 02/2001		80	24	063534681400	**MAN2007**
400.18T	MIDR 06.23.56 B/41	288	01/2000 → 02/2001		80	24	063534681400	**MAN2007**
400.26	MIDR 06.23.56 B/41	288	09/1998 → 02/2001		80	24	063534681400	**MAN2007**
400.26/A,400.26/ B,400.26/C	MIDR 06.23.56 B/41	288	01/2000 → 02/2001		80	24	063534681400	**MAN2007**
400.26/B	MIDR 06.23.56 B/41	288	01/2000 → 02/2001		80	24	063534681400	**MAN2007**
400.26T	MIDR 06.23.56 B/41	288	01/2000 → 02/2001		80	24	063534681400	**MAN2007**
400.32/A,400.32/ B,400.32/C	MIDR 06.23.56 B/41	288	01/2000 → 02/2001		80	24	063534681400	**MAN2007**
400.32/B	MIDR 06.23.56 B/41	288	01/2000 → 02/2001		80	24	063534681400	**MAN2007**
420.18	dCi 11C	303	01/2001 → 02/2001		80	24	063534681400	**MAN2007**
420.26	dCi 11C	303	01/2001 → 02/2001		80	24	063534681400	**MAN2007**
420.26	dCi 11E	266	01/2001 → 02/2001		80	24	063534681400	**MAN2007**
420.34	dCi 11C	303	01/2001 → 02/2001		80	24	063534681400	**MAN2007**
Magnum								
AE 390.18	MIDR 06.24.65 A/42	287	09/1996 → 05/2000		80	24	063534681400	**MAN2007**
AE 390.18T	MIDR 06.24.65 A/42	287	09/1996 → 05/2000		80	24	063534681400	**MAN2007**
AE 390.19	MIDR 06.24.65 A/42	287	09/1996 → 05/2000		80	24	063534681400	**MAN2007**
AE 390.19T	MIDR 06.24.65 A/42	287	09/1996 → 05/2000		80	24	063534681400	**MAN2007**
AE 390.26	MIDR 06.24.65 A/42	287	09/1996 → 05/2000		80	24	063534681400	**MAN2007**
AE 420ti.18	MIDR 06.35.40 J/3, MIDR 06.35.40 P/41	305	04/1996 → 12/1996		80	24	063534681400	**MAN2007**
AE 420ti.18T	MIDR 06.35.40 J/3, MIDR 06.35.40 P/41	305	04/1996 → 12/1996		80	24	063534681400	**MAN2007**
AE 420ti.19	MIDR 06.35.40 J/3, MIDR 06.35.40 P/41	305	04/1996 → 12/1996		80	24	063534681400	**MAN2007**

		kW ÷ kW		i	A	V	LONG	SHORT
RENAULT TRUCKS								
Magnum								
AE 420ti.19T	MIDR 06.35.40 J/3, MIDR 06.35.40 P/41	305	04/1996 → 12/1996		80	24	063534681400	**MAN2007**
AE 420ti.22T	MIDR 06.35.40 J/3, MIDR 06.35.40 P/41	305	04/1996 → 10/1996		80	24	063534681400	**MAN2007**
AE 420ti.24	MIDR 06.35.40 J/3, MIDR 06.35.40 P/41	305	04/1996 → 12/1996		80	24	063534681400	**MAN2007**
AE 420ti.24T	MIDR 06.35.40 J/3, MIDR 06.35.40 P/41	305	04/1996 → 12/1996		80	24	063534681400	**MAN2007**
AE 420ti.26	MIDR 06.35.40 J/3, MIDR 06.35.40 P/41	305	04/1996 → 12/1996		80	24	063534681400	**MAN2007**
AE 420ti.26T	MIDR 06.35.40 J/3, MIDR 06.35.40 P/41	305	04/1996 → 12/1996		80	24	063534681400	**MAN2007**
AE 430.18	MIDR 06.24.65 B/42	316	09/1996 → 05/2000		80	24	063534681400	**MAN2007**
AE 430.18T	MIDR 06.24.65 B/42	316	09/1996 → 05/2000		80	24	063534681400	**MAN2007**
AE 430.19	MIDR 06.24.65 B/42	316	09/1996 → 05/2000		80	24	063534681400	**MAN2007**
AE 430.19T	MIDR 06.24.65 B/42	316	09/1996 → 05/2000		80	24	063534681400	**MAN2007**
AE 430.26	MIDR 06.24.65 B/42	316	09/1996 → 05/2000		80	24	063534681400	**MAN2007**
AE 430.26T	MIDR 06.24.65 B/42	316	01/1998 → 05/2000		80	24	063534681400	**MAN2007**
AE 430.26T	MIDR 06.24.65 B/42	316	01/1997 → 05/2000		80	24	063534681400	**MAN2007**
AE 470.18	MIDR 06.24.65 C/42	346	11/1996 → 05/2000		80	24	063534681400	**MAN2007**
AE 470.18T	MIDR 06.24.65 C/42	346	11/1996 → 05/2000		80	24	063534681400	**MAN2007**
AE 470.19	MIDR 06.24.65 C/42	346	11/1996 → 05/2000		80	24	063534681400	**MAN2007**
AE 470.19T	MIDR 06.24.65 C/42	346	11/1996 → 05/2000		80	24	063534681400	**MAN2007**
AE 470.26	MIDR 06.24.65 C/42	346	01/1997 → 05/2000		80	24	063534681400	**MAN2007**
AE 470.26T	MIDR 06.24.65 C/42	346	01/1998 → 05/2000		80	24	063534681400	**MAN2007**
AE 560.18	Mack-EE9-560	412	04/1996 → 05/2000		80	24	063534681400	**MAN2007**

		kW ÷ kW		i	A	V	LONG	SHORT
RENAULT TRUCKS								
Magnum								
AE 560.18T	Mack-EE9-560	412	04/1996 → 05/2000		80	24	063534681400	**MAN2007**
AE 560.19	Mack-EE9-560	412	04/1996 → 05/2000		80	24	063534681400	**MAN2007**
AE 560.19T	Mack-EE9-560	412	04/1996 → 05/2000		80	24	063534681400	**MAN2007**
AE 560.26	Mack-EE9-560	412	04/1996 → 05/2000		80	24	063534681400	**MAN2007**
AE 560.26T	Mack-EE9-560	412	01/1997 → 05/2000		80	24	063534681400	**MAN2007**
AE 560.26T	Mack-EE9-560	412	01/1998 → 05/2000		80	24	063534681400	**MAN2007**
Magnum E.TECH								
E.TECH 400.18	MACK E.TECH A/46	295	05/2000 → 02/2001		80	24	063534681400	**MAN2007**
E.TECH 400.18T	MACK E.TECH A/46	295	05/2000 → 02/2001		80	24	063534681400	**MAN2007**
E.TECH 400.24	MACK E.TECH A/46	295	05/2000 → 02/2001		80	24	063534681400	**MAN2007**
E.TECH 400.26	MACK E.TECH A/46	295	05/2000 → 02/2001		80	24	063534681400	**MAN2007**
E.TECH 440.18	MACK E.TECH B/46	324	05/2000 → 02/2001		80	24	063534681400	**MAN2007**
E.TECH 440.18T	MACK E.TECH B/46	324	05/2000 → 02/2001		80	24	063534681400	**MAN2007**
E.TECH 440.24	MACK E.TECH B/46	324	05/2000 → 02/2001		80	24	063534681400	**MAN2007**
E.TECH 440.26	MACK E.TECH B/46	324	05/2000 → 02/2001		80	24	063534681400	**MAN2007**
E.TECH 440.26T	MACK E.TECH B/46	324	05/2000 → 02/2001		80	24	063534681400	**MAN2007**
E.TECH 480.18	MACK E.TECH C/46	347 353	05/2000 → 02/2001		80	24	063534681400	**MAN2007**
E.TECH 480.18T	MACK E.TECH C/46	347 353	05/2000 → 02/2001		80	24	063534681400	**MAN2007**
E.TECH 480.24	MACK E.TECH C/46	347 353	05/2000 → 02/2001		80	24	063534681400	**MAN2007**
E.TECH 480.26	MACK E.TECH C/46	347 353	05/2000 → 02/2001		80	24	063534681400	**MAN2007**
E.TECH 480.26T	MACK E.TECH C/46	347 353	05/2000 → 02/2001		80	24	063534681400	**MAN2007**
Midliner								
M 250.13/C	MIDR 06.02.26 Y/41	184	05/1996 → 01/2000		80	24	063534681400	**MAN2007**
M 250.15/C,M 250.15/D	MIDR 06.02.26 Y/41	184	05/1996 → 01/2000		80	24	063534681400	**MAN2007**
M 250.15C/T	MIDR 06.02.26 Y/41	184	05/1996 → 01/2000		80	24	063534681400	**MAN2007**
M 250.16/D	MIDR 06.02.26 Y/41	184	05/1996 → 01/2000		80	24	063534681400	**MAN2007**

		kW ÷ kW			A	V	LONG	SHORT
RENAULT TRUCKS								
Midlum								
135.08/B,150.08/B	MIDR 04.02.26 A/4, MIDR 04.02.26 B/4	100 110	02/2000 → 06/2001		80	24	063534681400	**MAN2007**
135.09/B,150.09/B	MIDR 04.02.26 A/4, MIDR 04.02.26 B/4	100 110	02/2000 → 06/2001		80	24	063534681400	**MAN2007**
135.10/B,150.10/B	MIDR 04.02.26 A/4, MIDR 04.02.26 B/4	100 110	02/2000 → 06/2001		80	24	063534681400	**MAN2007**
150.08/B	dCi 4B	112	10/2001 → 04/2006		80	24	063534681400	**MAN2007**
150.10/B	dci 6A	195	10/2001 → 04/2006		80	24	063534681400	**MAN2007**
150.12/B	dCi 4B, MIDR 04.02.26 B/4	110 112	02/2000 → 06/2001		80	24	063534681400	**MAN2007**
180	dCi 4C	128	10/2001 → 04/2006		80	24	063534681400	**MAN2007**
180.08/B	MIDR 06.02.26 V/4	132	02/2000 → 06/2001		80	24	063534681400	**MAN2007**
180.08/B	dCi 4C	128	10/2001 → 04/2006		80	24	063534681400	**MAN2007**
180.09/B	MIDR 06.02.26 V/4	132	02/2000 → 06/2001		80	24	063534681400	**MAN2007**
180.10/B	MIDR 06.02.26 V/4	132	02/2000 → 06/2001		80	24	063534681400	**MAN2007**
180.10/B	dCi 4C	128	10/2001 → 04/2006		80	24	063534681400	**MAN2007**
180.12	dCi 4C	128	10/2001 → 04/2006		80	24	063534681400	**MAN2007**
180.12/B	MIDR 06.02.26 V/4	132	02/2000 → 06/2001		80	24	063534681400	**MAN2007**
210.08/B	dci 6W, MIDR 06.02.26 W/4	154 158	02/2000 → 06/2001		80	24	063534681400	**MAN2007**
210.08/B	MIDR 06.02.26 W/4	154	02/2000 → 06/2001		80	24	063534681400	**MAN2007**
210.09/B	MIDR 06.02.26 W/4	154	02/2000 → 06/2001		80	24	063534681400	**MAN2007**
210.10/B	MIDR 06.02.26 W/4	154	02/2000 → 06/2001		80	24	063534681400	**MAN2007**
210.10/B	dci 6W, MIDR 06.02.26 W/4	154 158	02/2000 → 06/2001		80	24	063534681400	**MAN2007**
210.12/C	dci 6W, MIDR 06.02.26 W/4	154 158	02/2000 → 06/2001		80	24	063534681400	**MAN2007**
210.12/C	MIDR 06.02.26 W/4	154	02/2000 → 06/2001		80	24	063534681400	**MAN2007**
210.13/C	dci 6W, MIDR 06.02.26 W/4	154 158	02/2000 → 06/2001		80	24	063534681400	**MAN2007**
210.13/C	MIDR 06.02.26 W/4	154	02/2000 → 06/2001		80	24	063534681400	**MAN2007**

		kW ÷ kW		i	A	V	LONG	SHORT
RENAULT TRUCKS								
Midlum								
210.14/C	dci 6W, MIDR 06.02.26 W/4	154 158	02/2000 → 06/2001		80	24	063534681400	**MAN2007**
210.15/C	MIDR 06.02.26 W/4	154	02/2000 → 06/2001		80	24	063534681400	**MAN2007**
210.16/C	dci 6W, MIDR 06.02.26 W/4	154 158	02/2000 → 06/2001		80	24	063534681400	**MAN2007**
220.12	dci 6W	158	10/2001 → 04/2006		80	24	063534681400	**MAN2007**
220.14	dci 6W	158	10/2001 → 04/2006		80	24	063534681400	**MAN2007**
220.15	dci 6W	158	10/2001 → 04/2006		80	24	063534681400	**MAN2007**
220.18/D	dci 6W	158	10/2001 → 04/2006		80	24	063534681400	**MAN2007**
250.12/C	MIDR 06.02.26 Y/41	184	02/2000 → 06/2001		80	24	063534681400	**MAN2007**
250.13/C	MIDR 06.02.26 Y/41	184	02/2000 → 06/2001		80	24	063534681400	**MAN2007**
250.14/C	MIDR 06.02.26 Y/41	184	02/2000 → 06/2001		80	24	063534681400	**MAN2007**
250.15/C	MIDR 06.02.26 Y/41	184	02/2000 → 06/2001		80	24	063534681400	**MAN2007**
250.16/C	MIDR 06.02.26 Y/41	184	02/2000 → 06/2001		80	24	063534681400	**MAN2007**
250.16/CT	MIDR 06.02.26 Y/41	184	02/2000 → 06/2001		80	24	063534681400	**MAN2007**
270.12/C	dci 6A	195	10/2001 → 04/2006		80	24	063534681400	**MAN2007**
270.13/C	dci 6A	195	10/2001 → 04/2006		80	24	063534681400	**MAN2007**
270.14/C	dci 6A	195	10/2001 → 04/2006		80	24	063534681400	**MAN2007**
270.16/C	dci 6A	195	10/2001 → 04/2006		80	24	063534681400	**MAN2007**
Premium								
Distribution 210.16	MIDR 06.02.26 W/4	154	04/1996 → 09/2001		80	24	063534681400	**MAN2007**
Distribution 210.18D, 220.18	dci 6W, MIDR 06.02.26 W/4	154 158	04/1996 → 09/2001		80	24	063534681400	**MAN2007**
Distribution 250.16	MIDR 06.02.26 Y/41	184	04/1996 → 09/2001		80	24	063534681400	**MAN2007**
Distribution 250.18D	MIDR 06.02.26 Y/41	184	04/1996 → 09/2001		80	24	063534681400	**MAN2007**
Distribution 250.19	MIDR 06.02.26 Y/41	184	04/1996 → 09/2001		80	24	063534681400	**MAN2007**
Distribution 260.16	MIDR 06.20.45 C/4	188	04/1996 → 09/2001		80	24	063534681400	**MAN2007**
Distribution 260.18	MIDR 06.20.45 C/4	188	04/1996 → 09/2001		80	24	063534681400	**MAN2007**
Distribution 260.19	MIDR 06.20.45 C/4	188	04/1996 → 09/2001		80	24	063534681400	**MAN2007**
Distribution 300.16D	MIDR 06.20.45 D/41	219	04/1996 → 09/2001		80	24	063534681400	**MAN2007**

		kW ÷ kW		i	A	V	MAGNETI MARELLI LONG	MAGNETI MARELLI SHORT
RENAULT TRUCKS								
Premium								
Distribution 300.16T	MIDR 06.20.45 D/41	219	04/1996 → 09/2001		80	24	063534681400	**MAN2007**
Distribution 300.18D	MIDR 06.20.45 D/41	219	04/1996 → 09/2001		80	24	063534681400	**MAN2007**
Distribution 300.18D/T	MIDR 06.20.45 D/41	219	04/1996 → 09/2001		80	24	063534681400	**MAN2007**
Distribution 300.19	MIDR 06.20.45 D/41	219	04/1996 → 09/2001		80	24	063534681400	**MAN2007**
Distribution 300.19D/T	MIDR 06.20.45 D/41	219	04/1996 → 09/2001		80	24	063534681400	**MAN2007**
Distribution 300.26D	MIDR 06.20.45 D/41	219	04/1996 → 09/2001		80	24	063534681400	**MAN2007**
Distribution 320.18	dCi 11G	230	08/2000 → 02/2001		80	24	063534681400	**MAN2007**
Distribution 320.18 D	dCi 11G	230	08/2000 → 02/2001		80	24	063534681400	**MAN2007**
Distribution 320.24D	dCi 11G	230	08/2000 → 02/2001		80	24	063534681400	**MAN2007**
Distribution 320.26D	dCi 11G	230	08/2000 → 02/2001		80	24	063534681400	**MAN2007**
Distribution 340.18D	MIDR 06.20.45 E/41	249	04/1996 → 03/2001		80	24	063534681400	**MAN2007**
Distribution 340.18D/T	MIDR 06.20.45 E/41	249	04/1996 → 03/2001		80	24	063534681400	**MAN2007**
Distribution 340.19D	MIDR 06.20.45 E/41	249	04/1996 → 03/2001		80	24	063534681400	**MAN2007**
Distribution 340.19D/T	MIDR 06.20.45 E/41	249	04/1996 → 03/2001		80	24	063534681400	**MAN2007**
Distribution 340.26D	MIDR 06.20.45 E/41	249	04/1996 → 03/2001		80	24	063534681400	**MAN2007**
Distribution 370.18	dCi 11E	266	08/2000 → 02/2001		80	24	063534681400	**MAN2007**
Distribution 370.18D	dCi 11E	266	08/2000 → 02/2001		80	24	063534681400	**MAN2007**
Distribution 370.24D	dCi 11E	266	08/2000 → 02/2001		80	24	063534681400	**MAN2007**
Distribution 370.26D	dCi 11E	266	11/2000 → 02/2001		80	24	063534681400	**MAN2007**
Distribution 400.18D	MIDR 06.23.56 B/41	288	01/2000 → 03/2001		80	24	063534681400	**MAN2007**
Distribution 400.18D/T	MIDR 06.23.56 B/41	288	01/2000 → 03/2001		80	24	063534681400	**MAN2007**
Distribution 420.18	dCi 11C	303	11/2000 → 02/2001		80	24	063534681400	**MAN2007**
Distribution 420.18D	dCi 11C	303	11/2000 → 02/2001		80	24	063534681400	**MAN2007**
Route 300.16	MIDR 06.20.45 D/41	219	09/1996 → 09/2001		80	24	063534681400	**MAN2007**
Route 300.18	MIDR 06.20.45 D/41	219	09/1996 → 09/2001		80	24	063534681400	**MAN2007**
Route 300.18T	MIDR 06.20.45 D/41	219	09/1996 → 09/2001		80	24	063534681400	**MAN2007**
Route 300.19	MIDR 06.20.45 D/41	219	09/1996 → 09/2001		80	24	063534681400	**MAN2007**

		kW ÷ kW			A	V	LONG	SHORT
RENAULT TRUCKS								
Premium								
Route 300.19T	MIDR 06.20.45 D/41	219	09/1996 → 09/2001		80	24	063534681400	**MAN2007**
Route 340.18	MIDR 06.20.45 E/41	249	04/1996 → 03/2001		80	24	063534681400	**MAN2007**
Route 340.18T	MIDR 06.20.45 E/41	249	04/1996 → 03/2001		80	24	063534681400	**MAN2007**
Route 340.19	MIDR 06.20.45 E/41	249	04/1996 → 03/2001		80	24	063534681400	**MAN2007**
Route 340.19T	MIDR 06.20.45 E/41	249	04/1996 → 03/2001		80	24	063534681400	**MAN2007**
Route 340.24	MIDR 06.20.45 E/41	249	04/1996 → 03/2001		80	24	063534681400	**MAN2007**
Route 340.26	MIDR 06.20.45 E/41	249	04/1996 → 03/2001		80	24	063534681400	**MAN2007**
Route 385.18,400.18	MIDR 06.23.56 A/41, MIDR 06.23.56 B/41	280 288	04/1996 → 03/2001		80	24	063534681400	**MAN2007**
Route 385.18T,400.18T	MIDR 06.23.56 A/41, MIDR 06.23.56 B/41	280 288	04/1996 → 03/2001		80	24	063534681400	**MAN2007**
Route 385.19,400.19	MIDR 06.23.56 A/41, MIDR 06.23.56 B/41	280 288	04/1996 → 03/2001		80	24	063534681400	**MAN2007**
Route 385.19T,400.19T	MIDR 06.23.56 A/41, MIDR 06.23.56 B/41	280 288	04/1996 → 03/2001		80	24	063534681400	**MAN2007**
Route 385.24,400.24	MIDR 06.23.56 A/41, MIDR 06.23.56 B/41	280 288	04/1996 → 03/2001		80	24	063534681400	**MAN2007**
Route 385.24T,400.24T	MIDR 06.23.56 A/41, MIDR 06.23.56 B/41	280 288	09/1996 → 03/2001		80	24	063534681400	**MAN2007**
Route 385.26	MIDR 06.23.56 A/41	280	04/1996 → 03/2001		80	24	063534681400	**MAN2007**
Route 385.26,400.26	MIDR 06.23.56 A/41, MIDR 06.23.56 B/41	280 288	04/1996 → 03/2001		80	24	063534681400	**MAN2007**
SCANIA								
2 - series								
112 H/280	DS 11.14	206	01/1981 → 12/1986		55	24	063534696430	**MAN2010**
112 H/305	DS 11.15	224	01/1981 → 12/1986		55	24	063534696430	**MAN2010**
112 M/305	DS 11.15	224 232	01/1981 → 12/1986		55	24	063534696430	**MAN2010**
82 H/210	DS 8, DS 8.01, DS 8.01 B10, DS 8.01 B11, DS 8.01 B12, DS 8.05	155	01/1981 → 12/1986		55	24	063534696430	**MAN2010**

		kW ÷ kW			A	V	LONG	SHORT
SCANIA								
2 - series								
82 M/190	DS 8.06	140	10/1982 → 03/1988		55	24	063534696430	**MAN2010**
82 M/210	DS 8, DS 8.01, DS 8.01 B10, DS 8.01 B11, DS 8.01 B12, DS 8.05	155	01/1981 → 12/1986		55	24	063534696430	**MAN2010**
92 H/245	DS 9.01	180	01/1987 → 12/1988		55	24	063534696430	**MAN2010**
92 H/245	DS 9.01	180	01/1985 → 12/1986		55	24	063534696430	**MAN2010**
92 H/275	DSC 9.01	202	01/1985 → 12/1986		55	24	063534696430	**MAN2010**
92 H/275	DSC 9.01	202	01/1987 → 12/1988		55	24	063534696430	**MAN2010**
92 M/245	DS 9.01	180	01/1985 → 12/1986		55	24	063534696430	**MAN2010**
92 M/245	DS 9.01	180	01/1987 → 12/1988		55	24	063534696430	**MAN2010**
92 M/275	DSC 9.01	202	01/1985 → 12/1986		55	24	063534696430	**MAN2010**
92 M/275	DSC 9.01	202	01/1985 → 03/1988		55	24	063534696430	**MAN2010**
92 M/275	DSC 9.01	202	01/1987 → 12/1988		55	24	063534696430	**MAN2010**
R 142 E	DS 14.06	285 291	05/1980 → 03/1988		55	24	063534696430	**MAN2010**
R 142 H	DSC 14.01, DSC 14.02	301 309	05/1980 → 03/1988		55	24	063534696430	**MAN2010**
R 142 H	DS 14.06	285 291	05/1980 → 03/1988		55	24	063534696430	**MAN2010**
R 142 M	DS 14.06	285 291	05/1980 → 03/1988		55	24	063534696430	**MAN2010**
T 142 E	DS 14.06	285 291	05/1980 → 03/1988		55	24	063534696430	**MAN2010**
SCANIA								
3 - series								
113 E/320	DSC 11.16, DSC 11.17, DSC 11.21	235 239	11/1991 → 12/1996		55	24	063534696430	**MAN2010**
113 E/360	DSC 11.13, DSC 11.18, DSC 11.23, DSC 11.30	265 267	01/1990 → 12/1996		55	24	063534696430	**MAN2010**
113 E/380	DSC 11.22, DSC 11.70	280	01/1991 → 12/1996		55	24	063534696430	**MAN2010**
113 H/310	DS 11.34, DS 11.73, DSC 11.06	228 229	05/1988 → 12/1989		55	24	063534696430	**MAN2010**
113 H/310	DS 11.34, DS 11.73, DS 11.75, DSC 11.06, DSC 11.08	228 229	01/1990 → 12/1991		55	24	063534696430	**MAN2010**
113 H/320	DSC 11.16	239	05/1988 → 12/1989		55	24	063534696430	**MAN2010**
113 H/320	DSC 11.16, DSC 11.17, DSC 11.21	235 239	01/1990 → 12/1996		55	24	063534696430	**MAN2010**
113 H/360	DSC 11.13, DSC 11.18, DSC 11.23, DSC 11.30	265 267	01/1990 → 12/1996		55	24	063534696430	**MAN2010**
113 H/360	DSC 11.13	267	05/1988 → 12/1989		55	24	063534696430	**MAN2010**
113 H/380	DSC 11.22, DSC 11.70	280	01/1991 → 12/1996		55	24	063534696430	**MAN2010**
113 M/320	DSC 11.16	239	05/1988 → 12/1989		55	24	063534696430	**MAN2010**
113 M/320	DSC 11.16, DSC 11.17, DSC 11.21	235 239	01/1990 → 12/1996		55	24	063534696430	**MAN2010**

		kW ÷ kW		i	A	V	MAGNETI MARELLI LONG	MAGNETI MARELLI SHORT
SCANIA								
3 - series								
113 M/360	DSC 11.13, DSC 11.18, DSC 11.23, DSC 11.30	265 267	01/1990 → 12/1996		55	24	063534696430	**MAN2010**
113 M/360	DSC 11.13	267	05/1988 → 12/1989		55	24	063534696430	**MAN2010**
113 M/380	DSC 11.22, DSC 11.70	280	01/1991 → 12/1996		55	24	063534696430	**MAN2010**
113 M/400	DTC 11.01, DTC 11.02	295	01/1993 → 12/1996		55	24	063534696430	**MAN2010**
113 M/400	DTC 11.01, DTC 11.02	295	01/1992 → 12/1996		55	24	063534696430	**MAN2010**
114 G/340	DC 11.01, DC 11.03	250	03/1998 →		55	24	063534696430	**MAN2010**
143 E/420	DSC 14.08	309	01/1991 → 12/1996		55	24	063534696430	**MAN2010**
143 E/450	DSC 14.03, DSC 14.10	331 333	01/1990 → 12/1996		55	24	063534696430	**MAN2010**
143 E/500	DSC 14.09, DSC 14.16	368	01/1991 → 12/1996		55	24	063534696430	**MAN2010**
143 H/400	DSC 14.06	297	01/1990 → 12/1991		55	24	063534696430	**MAN2010**
143 H/400	DSC 14.06	297	05/1988 → 12/1989		55	24	063534696430	**MAN2010**
143 H/420	DSC 14.08	309	01/1991 → 12/1996		55	24	063534696430	**MAN2010**
143 H/420	DSC 14.08	309	01/1991 → 12/1993		55	24	063534696430	**MAN2010**
143 H/450	DSC 14.03	331	05/1988 → 12/1989		55	24	063534696430	**MAN2010**
143 H/450	DSC 14.03, DSC 14.10	331 333	01/1990 → 12/1996		55	24	063534696430	**MAN2010**
143 H/470	DSC 14.04	346	03/1988 → 12/1989		55	24	063534696430	**MAN2010**
143 H/470	DSC 14.04	346	01/1990 → 05/1991		55	24	063534696430	**MAN2010**
143 H/500	DSC 14.09, DSC 14.16	368	01/1991 → 12/1996		55	24	063534696430	**MAN2010**
143 M/420	DSC 14.08	309	01/1991 → 12/1996		55	24	063534696430	**MAN2010**
143 M/450	DSC 14.03	331	05/1988 → 12/1989		55	24	063534696430	**MAN2010**
143 M/450	DSC 14.03, DSC 14.10	331 333	01/1990 → 12/1996		55	24	063534696430	**MAN2010**
143 M/470	DSC 14.04	346	01/1990 → 05/1991		55	24	063534696430	**MAN2010**
143 M/470	DSC 14.04	346	01/1990 → 05/1991		55	24	063534696430	**MAN2010**
143 M/500	DSC 14.09, DSC 14.16	368	01/1991 → 12/1996		55	24	063534696430	**MAN2010**
93 H/220	DSC 9.10	162	12/1991 → 12/1996		55	24	063534696430	**MAN2010**
93 H/250	DS 9.05, DSC 9.07	185	01/1990 → 12/1996		55	24	063534696430	**MAN2010**
93 H/250	DS 9.05	185	03/1988 → 12/1989		55	24	063534696430	**MAN2010**
93 H/250	DS 9.05	185	01/1989 → 12/1989		55	24	063534696430	**MAN2010**
93 H/280	DSC 9.02, DSC 9.08	207 208	12/1991 → 12/1996		55	24	063534696430	**MAN2010**
93 M/210	DS 9.08	155	03/1988 → 12/1991		55	24	063534696430	**MAN2010**

		kW ÷ kW		i	A	V	MAGNETI MARELLI LONG	MAGNETI MARELLI SHORT
SCANIA								
3 - series								
93 M/220	DSC 9.10	162	12/1991 → 12/1996		55	24	063534696430	**MAN2010**
93 M/230	DS 9.06	167	01/1990 → 12/1991		55	24	063534696430	**MAN2010**
93 M/230	DS 9.06	167	03/1988 → 12/1989		55	24	063534696430	**MAN2010**
93 M/250	DS 9.05, DSC 9.07	185	01/1990 → 12/1996		55	24	063534696430	**MAN2010**
93 M/250	DS 9.05	185	03/1988 → 12/1989		55	24	063534696430	**MAN2010**
93 M/250	DS 9.05, DSC 9.07	185	10/1990 → 12/1996		55	24	063534696430	**MAN2010**
93 M/280	DSC 9.02, DSC 9.08	207 208	01/1990 → 12/1996		55	24	063534696430	**MAN2010**
93 M/280	DSC 9.02	207	03/1988 → 12/1989		55	24	063534696430	**MAN2010**
T 113 E/320	DSC 11.16, DSC 11.17, DSC 11.21	235 239	01/1990 → 12/1996		55	24	063534696430	**MAN2010**
T 113 E/360	DSC 11.13, DSC 11.18, DSC 11.23	266 267	01/1990 → 12/1996		55	24	063534696430	**MAN2010**
T 113 H/320	DSC 11.16, DSC 11.17, DSC 11.21	235 239	01/1990 → 12/1996		55	24	063534696430	**MAN2010**
T 113 H/360	DSC 11.13, DSC 11.18, DSC 11.23	266 267	01/1990 → 12/1996		55	24	063534696430	**MAN2010**
T 143 E/420	DSC 14.08	309	01/1991 → 12/1996		55	24	063534696430	**MAN2010**
T 143 E/450	DSC 14.03, DSC 14.10	331 333	01/1990 → 12/1996		55	24	063534696430	**MAN2010**
T 143 E/500	DSC 14.09, DSC 14.16	368	01/1991 → 12/1996		55	24	063534696430	**MAN2010**
T 143 H/420	DSC 14.08	309	01/1991 → 12/1996		55	24	063534696430	**MAN2010**
T 143 H/450	DSC 14.03, DSC 14.10	331 333	01/1990 → 12/1996		55	24	063534696430	**MAN2010**
T 143 H/500	DSC 14.09, DSC 14.16	368	01/1991 → 12/1996		55	24	063534696430	**MAN2010**
T 93 H/250	DS 9.05, DSC 9.07	185	01/1990 → 12/1996		55	24	063534696430	**MAN2010**
T 93 H/280	DSC 9.02, DSC 9.08	207 208	12/1991 → 12/1996		55	24	063534696430	**MAN2010**
3 - series bus								
K 93 CL	DSC 9.08	208	01/1991 → 12/1996		55	24	063534696430	**MAN2010**
STEYR								
1390-Serie								
1390.180		132	01/1971 → 01/1972		27	24	063534897070	**MAN2019**
990-Serie								
990.180	WD 614.01, WD 614.20	132	01/1969 → 05/1973		27	24	063534897070	**MAN2019**
990.180	WD 614.01, WD 614.20	132	01/1968 → 05/1973		27	24	063534897070	**MAN2019**

		kW ÷ kW		i	A	V	MAGNETI MARELLI LONG	MAGNETI MARELLI SHORT
VOLVO								
8700								
8700	DH12D340, DH12E340	250	06/2001 →		110	24	063536550080	**MAN2032**
8700	DH12D380, DH12E380	280	06/2001 →		110	24	063536550080	**MAN2032**
9700								
9700	DH12D340, DH12E340	250	06/2001 →		110	24	063536550080	**MAN2032**
9700	DH12D420, DH12E420	309	01/2005 →		110	24	063536550080	**MAN2032**
9700	DH12D340, DH12E340	250	10/2001 →		110	24	063536550080	**MAN2032**
9700	DH12D380, DH12E380	280	10/2001 →		110	24	063536550080	**MAN2032**
9700	DH12E460	338	10/2007 →		110	24	063536550080	**MAN2032**
9900								
9900	DH12D380, DH12E380	280	06/2001 →		110	24	063536550080	**MAN2032**
9900	DH12D420, DH12E420	309	01/2005 →		110	24	063536550080	**MAN2032**
9900	DH12E460	338	10/2007 →		110	24	063536550080	**MAN2032**
B 12								
B 12	DH12E380	280	02/2006 →		110	24	063536550080	**MAN2032**
B 12	DH12E340	250	02/2006 →		110	24	063536550080	**MAN2032**
B 12	D12A420	309	06/2001 →		110	24	063536550080	**MAN2032**
B 12	D12C420, D12D420, DH12E420	309	02/2006 →		110	24	063536550080	**MAN2032**
B 12	DH12E460	338	02/2006 →		110	24	063536550080	**MAN2032**
B 12	DH12D340, DH12E340	250	02/2006 →		110	24	063536550080	**MAN2032**
FH 12								
FH 12/340	D12A340, D12C340, D12D340	250	12/2001 → 08/2006		110	24	063536550080	**MAN2032**
FH 12/380	D12A380, D12C380, D12D380	279	12/2001 → 08/2006		110	24	063536550080	**MAN2032**
FH 12/380	D12A380, D12C380, D12D380	279 280	12/2001 → 08/2006		110	24	063536550080	**MAN2032**
FH 12/420	D12A420, D12C420, D12D420	309	12/2001 → 08/2006		110	24	063536550080	**MAN2032**

		kW ÷ kW		i	A	V	MAGNETI MARELLI LONG	MAGNETI MARELLI SHORT
VOLVO								
FH 12								
FH 12/460	D12C460, D12D460	338	12/2001 → 08/2006		110	24	063536550080	**MAN2032**
FH 12-500	D12D500	368	09/2001 → 08/2006		110	24	063536550080	**MAN2032**

Applicazione per marca e veicolo
Vehicle application guide
Zuordnung nach Marke und Fahrzeugtyp
Affectations par marques et véhicules
Aplicación por marca y vehículo
Aplicação por marca e veículo
Εφαρμογή ανά μοντέλο
Zastosowanie dla marki i pojazdu
Применение по марке и модели
Marka ve araca göre uygulama



						A	V	LONG	SHORT
BELL									
GRADERS	670CH		01/1997	→		45	24	063534882060	**MAN2014**
CASE IH									
1068B	Tutte		01/1989	→	12/1994	45	24	063534882060	**MAN2014**
1085C	Tutte		01/1990	→		45	24	063534882060	**MAN2014**
1088	Tutte	590	01/1990	→	12/1992	45	24	063534882060	**MAN2014**
1155E	Tutte		01/1990	→	01/1994	45	24	063534882060	**MAN2014**
1394	Tutte	4-219 D	01/1983	→	01/1988	72	12	054022656010	**MAN766**
1494	Tutte	4-219D	01/1983	→	01/1988	72	12	054022656010	**MAN766**
1594	Tutte	6-329D	01/1983	→	01/1988	72	12	054022656010	**MAN766**
170C	Tutte		01/1988	→	12/1994	45	24	063534882060	**MAN2014**
220B	Tutte		01/1989	→	12/1994	45	24	063534882060	**MAN2014**
3220	Tutte	3-179 Diesel	01/1994	→	01/1997	72	12	054022656010	**MAN766**
380B	Tutte	3-cyl	01/1987	→	12/1993	72	12	054022656010	**MAN766**
385	Tutte	3-155 Case	01/1985	→	01/1990	72	12	054022656010	**MAN766**
395	Tutte	3-155 Case	01/1991	→	01/1993	72	12	054022656010	**MAN766**
395	Tutte	3-155 Case Diesel	01/1991	→	01/1993	72	12	054022656010	**MAN766**
4210	Tutte	4-239 Diesel	01/1994	→	01/1997	72	12	054022656010	**MAN766**
4230	Tutte	4-268 Diesel	01/1994	→	01/1997	72	12	054022656010	**MAN766**
4240	Tutte	4-268 Diesel	01/1994	→	01/1997	72	12	054022656010	**MAN766**
455	Tutte		01/1989	→	01/1994	45	24	063534882060	**MAN2014**
455C	Tutte		01/1990	→	01/1994	45	24	063534882060	**MAN2014**
485	Tutte	3-179D	01/1985	→	01/1990	72	12	054022656010	**MAN766**
488	Tutte		01/1987	→	12/1992	45	24	063534882060	**MAN2014**
495	Tutte	3-179D	01/1991	→	01/1994	72	12	054022656010	**MAN766**
495	Tutte	3-179 Diesel	01/1991	→	01/1994	72	12	054022656010	**MAN766**
585	Tutte	4-206D	01/1985	→	01/1990	72	12	054022656010	**MAN766**
585	Tutte	4-206	01/1985	→	12/1990	72	12	054022656010	**MAN766**
595	Tutte	4-206 Case Diesel	01/1991	→	01/1994	72	12	054022656010	**MAN766**
621	Tutte		01/1989	→	01/1993	45	24	063534882060	**MAN2014**
685	Tutte	4-239 Diesel	01/1985	→	01/1990	72	12	054022656010	**MAN766**
685	Tutte	4-239D	01/1985	→	01/1990	72	12	054022656010	**MAN766**
695	Tutte	4-239D	01/1991	→	01/1994	72	12	054022656010	**MAN766**
721	Tutte		01/1989	→	01/1993	45	24	063534882060	**MAN2014**
821	Tutte		01/1989	→	01/1993	45	24	063534882060	**MAN2014**
855D/E	Tutte		01/1990	→	01/1994	45	24	063534882060	**MAN2014**
885	Tutte	4-268 Diesel	01/1985	→	01/1990	72	12	054022656010	**MAN766**
885	Tutte	4-268D	01/1985	→	01/1990	72	12	054022656010	**MAN766**
888	Tutte		01/1988	→	12/1992	45	24	063534882060	**MAN2014**
895	Tutte	4-268 Diesel	01/1991	→	01/1994	72	12	054022656010	**MAN766**
9010/9010B	Tutte	390	01/1989	→	12/1994	45	24	063534882060	**MAN2014**
9020/9020B	Tutte	390D	01/1994	→	01/1998	45	24	063534882060	**MAN2014**
9030/9030B	Tutte		01/1994	→	01/1998	45	24	063534882060	**MAN2014**
921	Tutte		01/1991	→	01/1993	45	24	063534882060	**MAN2014**
959	Tutte	4-206 Case	01/1991	→	01/1994	72	12	054022656010	**MAN766**

						A	V	LONG	SHORT
CASE IH										
988	Tutte	Cummins 6T5.90	11/1996	→		45	24	063534882060	**MAN2014**
995	Tutte	4-268D	01/1991	→	01/1994	72	12	054022656010	**MAN766**
CS 660	Tutte	Cummins 8.3 TAA; 209kW; 6-cyl	05/2004	→		120	12	063321753010	**MAN1172**
CX120	Tutte		01/2000	→		45	24	063534882060	**MAN2014**
CX210	Tutte		01/2000	→		45	24	063534882060	**MAN2014**
MX5-1	Tutte		01/1996	→		72	12	054022656010	**MAN766**
MXM 120	Tutte		01/2002	→		120	12	063321753010	**MAN1172**
MXM 130	Tutte		01/2002	→		120	12	063321753010	**MAN1172**
MXM 140	Tutte		01/2002	→		120	12	063321753010	**MAN1172**
MXM 155	Tutte		01/2002	→		120	12	063321753010	**MAN1172**
MXM 175	Tutte		01/2002	→		120	12	063321753010	**MAN1172**
MXM 190	Tutte		01/2002	→		120	12	063321753010	**MAN1172**
W11/W11B/W11C	Tutte	4-390	01/1987	→	12/1994	45	24	063534882060	**MAN2014**
W14C	Tutte		01/1989	→	12/1994	45	24	063534882060	**MAN2014**
CRAWLER TRACTOR	1150E		01/1987	→	12/1996	45	24	063534882060	**MAN2014**
CRAWLER TRACTOR	1150G		01/1995	→	12/1999	45	24	063534882060	**MAN2014**
CRAWLER TRACTOR	1155E		01/1987	→	12/1994	45	24	063534882060	**MAN2014**
CRAWLER TRACTOR	1550		01/1985	→	12/1996	45	24	063534882060	**MAN2014**
CRAWLER TRACTOR	450C	4-390	01/1989	→	01/1994	45	24	063534882060	**MAN2014**
CRAWLER TRACTOR	850D		01/1987	→	12/1994	45	24	063534882060	**MAN2014**
CRAWLER TRACTOR	850E		01/1992	→	12/1996	45	24	063534882060	**MAN2014**
CRAWLER TRACTOR	850G		01/1994	→	12/1999	45	24	063534882060	**MAN2014**
CDC-CASE										
CRAWLER TRACTOR	1150,1550C		01/1989	→	01/1994	45	24	063534882060	**MAN2014**
CRAWLER TRACTOR	1150E,1550		01/1989	→	01/1994	45	24	063534882060	**MAN2014**
CRAWLER TRACTOR	450C,850D		01/1989	→	01/1994	45	24	063534882060	**MAN2014**
CRAWLER TRACTOR	455,855D,1155E		01/1989	→	01/1994	45	24	063534882060	**MAN2014**
EXCAVATORS	1088		01/1989	→	01/1994	45	24	063534882060	**MAN2014**
EXCAVATORS	170C,220B,350		01/1989	→	01/1994	45	24	063534882060	**MAN2014**
EXCAVATORS	488,688,888		01/1989	→	01/1994	45	24	063534882060	**MAN2014**
Wheel Loaders	621-721		01/1989	→	01/1994	45	24	063534882060	**MAN2014**
Wheel Loaders	821 -921		01/1989	→	01/1994	45	24	063534882060	**MAN2014**
Wheel Loaders	W11B,W14C,W36		01/1989	→	01/1994	45	24	063534882060	**MAN2014**
CEDAR RAPIDS										
CEDAR RAPIDS	3042JP		01/1997	→		45	24	063534882060	**MAN2014**
DEUTZ										
F 2L 511	Tutte		01/1963	→	01/1975	55	12	063534881850	**MAN2013**
DEUTZ-FAHR										
D - 2807	Tutte	F2L912	09/1988	→	01/1993	55	12	063534881850	**MAN2013**
D - 3607	Tutte	F2L912	09/1988	→	01/1993	55	12	063534881850	**MAN2013**
D - 7007	Tutte	F4L912	09/1988	→	01/1994	55	12	063534881850	**MAN2013**
DX - 3.10A	Tutte	F3L912	09/1988	→	01/1994	55	12	063534881850	**MAN2013**

						A	V	LONG	SHORT
DEUTZ-FAHR									
DX - 3.10V/F	Tutte	F3L912	06/1986	→	12/1991	55	12	063534881850	**MAN2013**
DX - 3.30A	Tutte	F3L912	09/1988	→	01/1994	55	12	063534881850	**MAN2013**
DX - 3.30V/F	Tutte	F3L912	09/1988	→		55	12	063534881850	**MAN2013**
DX - 3.50A	Tutte	F3L913	09/1988	→	01/1994	55	12	063534881850	**MAN2013**
DX - 3.50V/F	Tutte	F3L913	09/1988	→		55	12	063534881850	**MAN2013**
DX - 3.60A	Tutte	F4L912	09/1988	→	01/1994	55	12	063534881850	**MAN2013**
DX - 3.70A	Tutte	F4L912	09/1988	→	01/1994	55	12	063534881850	**MAN2013**
DX - 3.70V/F	Tutte	F4L912	09/1988	→		55	12	063534881850	**MAN2013**
DX - 3.80	Tutte	F4L913	09/1988	→	01/1994	55	12	063534881850	**MAN2013**
DX - 3.90A	Tutte	F4L913	09/1988	→	01/1994	55	12	063534881850	**MAN2013**
DX - 3.90V/F	Tutte	F4L913	09/1988	→		55	12	063534881850	**MAN2013**
DX - 4.10	Tutte	F4L912	09/1988	→	01/1994	55	12	063534881850	**MAN2013**
DX - 4.30A	Tutte	F4L913	09/1988	→		55	12	063534881850	**MAN2013**
DX - 4.31	Tutte	F4L913	01/1991	→	12/1991	55	12	063534881850	**MAN2013**
DX - 4.50A	Tutte	BF4L913T	09/1988	→	01/1994	55	12	063534881850	**MAN2013**
DX - 4.51	Tutte	BF4L913T	01/1990	→	12/1991	55	12	063534881850	**MAN2013**
DX - 4.70A	Tutte	BF4L913	09/1988	→	01/1994	55	12	063534881850	**MAN2013**
DX - 6.05/6.10A	Tutte	F6L912	09/1988	→	01/1994	55	12	063534881850	**MAN2013**
DX - 6.30A	Tutte	F6L913	09/1988	→	01/1994	55	12	063534881850	**MAN2013**
DX - 6.31A	Tutte	BF 6 L 913 T	01/1990	→	01/1994	55	12	063534881850	**MAN2013**
DX - 6.50A	Tutte	BF6L913	09/1988	→	01/1994	55	12	063534881850	**MAN2013**
DX - 6.60	Tutte	BF6L913	10/1988	→	12/1991	55	12	063534881850	**MAN2013**
DX - 7.10A	Tutte	BF6L913	09/1988	→	01/1994	55	12	063534881850	**MAN2013**
INTRAC - 2004	Tutte	F4L912	09/1988	→		55	12	063534881850	**MAN2013**
M - 1080	Tutte	KHD-F5L912	09/1988	→		55	12	063534881850	**MAN2013**
M - 1202	Tutte	KHD-F5L912	09/1988	→		55	12	063534881850	**MAN2013**
M - 980	Tutte	KHD-F4L912	01/1981	→	08/1988	55	12	063534881850	**MAN2013**
FENDT									
FARM	200S	KHD-F3L912	09/1988	→		55	12	063534881850	**MAN2013**
FARM	200S/FL146	KHD-F3L912	09/1988	→		55	12	063534881850	**MAN2013**
FARM	200V/FL145	KHD-F3L912	09/1988	→		55	12	063534881850	**MAN2013**
FARM	203P/FL156	KHD-F3L912	09/1988	→		55	12	063534881850	**MAN2013**
FARM	203V/FL155	KHD-F3L912	09/1988	→		55	12	063534881850	**MAN2013**
FARM	204P/FL166	KHD-F4L912	09/1988	→		55	12	063534881850	**MAN2013**
FARM	275			→		55	12	063534881850	**MAN2013**
FORD NEW HOLLAND									
TM115	Tutte	6cyl.	01/1999	→	12/2002	120	12	063321753010	**MAN1172**
TM120	Tutte		12/2000	→	12/2008	120	12	063321753010	**MAN1172**
TM125	Tutte		01/1999	→	12/2008	120	12	063321753010	**MAN1172**
TM130	Tutte		01/2002	→	01/2008	120	12	063321753010	**MAN1172**
TM135	Tutte		01/1999	→	12/2008	120	12	063321753010	**MAN1172**
TM140	Tutte		01/2002	→	01/2008	120	12	063321753010	**MAN1172**
TM150	Tutte	6cyl.	01/1999	→	12/2002	120	12	063321753010	**MAN1172**
TM165	Tutte	Power star 119kW	01/1999	→	12/2002	120	12	063321753010	**MAN1172**
TM175	Tutte		01/2002	→	01/2008	120	12	063321753010	**MAN1172**

						A	V	LONG	SHORT
JCB LANDPOWER									
FASTRAC	1135		01/1997	→		75	12	063377461010	**MAN7461**
FASTRAC	125/135/155/185		01/1993	→		75	12	063377461010	**MAN7461**
FASTRAC	125/145		01/1991	→	01/1993	75	12	063377461010	**MAN7461**
ROUGH TERRAIN FORKLIFTS	4C	Perkins		→		72	12	054022656010	**MAN766**
BACKHOE LOADERS	3CX-4	Perkins 4.236	01/1994	→		72	12	054022656010	**MAN766**
BACKHOE LOADERS	4CX	Perkins: TC		→		72	12	054022656010	**MAN766**
LOADALL	525-58		01/1987	→	01/1997	75	12	063377461010	**MAN7461**
LOADALL	525-67		01/1987	→	01/1997	75	12	063377461010	**MAN7461**
LOADERS	410	Perkins: C4.236		→		72	12	054022656010	**MAN766**
LOADERS	412	Perkins		→		72	12	054022656010	**MAN766**
LOADERS	415	Perkins		→		72	12	054022656010	**MAN766**
JOHN DEERE									
4045	Tutte	4-cyl		→		45	24	063534882060	**MAN2014**
4045DFM70	Tutte	4-cyl	01/2004	→	01/2007	45	24	063534882060	**MAN2014**
4045HF485	Tutte	4-cyl		→		45	24	063534882060	**MAN2014**
4045TF280	Tutte	4-cyl		→		45	24	063534882060	**MAN2014**
6068	Tutte	6-cyl		→		45	24	063534882060	**MAN2014**
6068DF/HF/TF	Tutte	6-cyl		→		45	24	063534882060	**MAN2014**
6068DFM	Tutte	6-cyl		→		45	24	063534882060	**MAN2014**
6068TFM50	Tutte	6-cyl		→		45	24	063534882060	**MAN2014**
6068TFM76	Tutte	6-cyl	01/2004	→	01/2007	45	24	063534882060	**MAN2014**
ENGINES	4045TF285	4-cyl		→		45	24	063534882060	**MAN2014**
ENGINES	6068HF285	6-cyl		→		45	24	063534882060	**MAN2014**
ENGINES	6068HF485	6-cyl		→		45	24	063534882060	**MAN2014**
CRAWLERS	655B		01/1982	→	01/1995	45	24	063534882060	**MAN2014**
CRAWLERS	700H, LGP, LT, LXT		01/2000	→		45	24	063534882060	**MAN2014**
CRAWLERS	750B/C/C-II		01/1982	→	01/1990	45	24	063534882060	**MAN2014**
CRAWLERS	755B	6068T	01/1985	→	01/1995	45	24	063534882060	**MAN2014**
CRAWLERS	850B/C/C-II		01/1982	→	01/2000	45	24	063534882060	**MAN2014**
EXCAVATORS	110		01/1998	→		45	24	063534882060	**MAN2014**
EXCAVATORS	120C			→		45	24	063534882060	**MAN2014**
EXCAVATORS	160C/LC			→		45	24	063534882060	**MAN2014**
EXCAVATORS	190E	4039D		→		45	24	063534882060	**MAN2014**
EXCAVATORS	200C/LC		01/1995	→		45	24	063534882060	**MAN2014**
EXCAVATORS	230C/LC/LCR	4045D		→		45	24	063534882060	**MAN2014**
EXCAVATORS	270C/LC		01/1997	→		45	24	063534882060	**MAN2014**
EXCAVATORS	330LC/LCR		01/1998	→		45	24	063534882060	**MAN2014**
EXCAVATORS	370C/LC		01/1998	→		45	24	063534882060	**MAN2014**
EXCAVATORS	450C/LC			→		45	24	063534882060	**MAN2014**
EXCAVATORS	490E	4045T		→		45	24	063534882060	**MAN2014**
EXCAVATORS	690E/LC	6068D		→		45	24	063534882060	**MAN2014**
EXCAVATORS	790E/LC	6068D		→		45	24	063534882060	**MAN2014**
EXCAVATORS	792D/LC		01/1993	→		45	24	063534882060	**MAN2014**

						A	V	LONG	SHORT
JOHN DEERE									
EXCAVATORS	892E/892E/LC	6078D, 6076A		→		45	24	063534882060	**MAN2014**
EXCAVATORS	992E/992E/LC		01/1994	→		45	24	063534882060	**MAN2014**
GRADERS	570B		01/1971	→	12/1981	45	24	063534882060	**MAN2014**
GRADERS	670B/C		01/1982	→		45	24	063534882060	**MAN2014**
GRADERS	670C-II/670CH/670CH-II			→		45	24	063534882060	**MAN2014**
GRADERS	672B/C		01/1988	→		45	24	063534882060	**MAN2014**
GRADERS	672CH/672CH-II		01/1997	→		45	24	063534882060	**MAN2014**
GRADERS	770B/BH		01/1982	→		45	24	063534882060	**MAN2014**
GRADERS	770C			→		45	24	063534882060	**MAN2014**
GRADERS	772B/BH/CH/CH-II		01/1982	→		45	24	063534882060	**MAN2014**
HANDLERS	3200Telescopic			→		45	24	063534882060	**MAN2014**
HANDLERS	3400Telescopic			→		45	24	063534882060	**MAN2014**
LOADERS	344G	4045T	01/1994	→	12/1998	45	24	063534882060	**MAN2014**
LOADERS	344H		01/1998	→		45	24	063534882060	**MAN2014**
LOADERS	444G/H		01/1994	→		45	24	063534882060	**MAN2014**
LOADERS	544H/J		01/1997	→		45	24	063534882060	**MAN2014**
TOOL CARRIERS	TC44H		01/1997	→		45	24	063534882060	**MAN2014**
TOOL CARRIERS	TC54H		01/1997	→		45	24	063534882060	**MAN2014**
TOOL CARRIERS	TC62H		01/1997	→		45	24	063534882060	**MAN2014**
JW (JENBACHER WERKE)									
COMPRESSOR	JW - 1000		09/1988	→		55	12	063534881850	**MAN2013**
COMPRESSOR	JW - 370		09/1988	→		55	12	063534881850	**MAN2013**
COMPRESSOR	JW - 550		09/1988	→		55	12	063534881850	**MAN2013**
COMPRESSOR	JW - 750		09/1988	→		55	12	063534881850	**MAN2013**
KOMATSU									
D41A	Tutte	Komatsu 6D102	09/1995	→		45	24	063534882060	**MAN2014**
D41A	Tutte	6D102	09/1995	→		45	24	063534882060	**MAN2014**
D41E	Tutte	Komatsu S6D102	08/1995	→		45	24	063534882060	**MAN2014**
D41E	Tutte	S6D102	08/1995	→		45	24	063534882060	**MAN2014**
D41P	Tutte	Komatsu S6D102	03/1995	→		45	24	063534882060	**MAN2014**
D41P	Tutte	S6D102	03/1995	→		45	24	063534882060	**MAN2014**
KRAMER									
212 - E	Tutte	KHD-F2L912-K23L	06/1988	→		55	12	063534881850	**MAN2013**
516	Tutte	KHD-F4L912-K41B	09/1988	→		55	12	063534881850	**MAN2013**
LINDE									
H - 20	Tutte	KHD-F3L913G	09/1988	→		55	12	063534881850	**MAN2013**
H - 25	Tutte	KHD-F3L913G	09/1988	→		55	12	063534881850	**MAN2013**
H - 30	Tutte	KHD-F3L913G	09/1988	→		55	12	063534881850	**MAN2013**
H - 35	Tutte	KHD-F4L912	09/1988	→		55	12	063534881850	**MAN2013**
H - 40	Tutte	KHD-F4L912	09/1988	→		55	12	063534881850	**MAN2013**
H - 70	Tutte	KHD-F6L912	09/1988	→		55	12	063534881850	**MAN2013**

						A	V	LONG	SHORT
LISTER PETER									
DIESEL ENGINE	ALPHA - LPA3		→			72	12	054022656010	**MAN766**
MANITOU									
MLB 625	T	Perkins 1104 C 44T	→			75	12	063377461010	**MAN7461**
MT 1030	S	Perkins 1104C 44 T	→			75	12	063377461010	**MAN7461**
MT 1033	HLT	Perkins 1104C 44 T	→			75	12	063377461010	**MAN7461**
MT 1235	S-ST	Perkins 1104C 44 T	→			75	12	063377461010	**MAN7461**
MT 1240	LT-ULTRA	Perkins 1104C 44 T	→			75	12	063377461010	**MAN7461**
MT 1335	H-SLT-ORH	Perkins 1104C 44 T	→			75	12	063377461010	**MAN7461**
MT 1335	SL-SLT	Perkins 1104C 44 T	→			75	12	063377461010	**MAN7461**
MT 1340	SLT-MU-ORH	Perkins 1104C 44 T	→			75	12	063377461010	**MAN7461**
MT 1340	SLT-SLT-ULTRA	Perkins 1104C 44 T	→			75	12	063377461010	**MAN7461**
MT 1435	H-SLT-MU-ORH	Perkins 1104C 44 T	→			75	12	063377461010	**MAN7461**
MT 1435	H-SL-Turbo	Perkins 1104C 44 T	→			75	12	063377461010	**MAN7461**
MT 1435	SL-SLT	Perkins 1104C 44 T	→			75	12	063377461010	**MAN7461**
MT 1440	SL-T	Perkins 1104C 44 T	→			75	12	063377461010	**MAN7461**
MT 1440	SLT-MU-ORH-RC	Perkins 1104C 44 T	→			75	12	063377461010	**MAN7461**
MT 1440	SLT-SLT-ULT	Perkins 1104C 44 T	→			75	12	063377461010	**MAN7461**
MT 1740	SLT-MU-ORH	Perkins 1104C 44 T	→			75	12	063377461010	**MAN7461**
MT 1740	SLT-SLT-ULTRA	Perkins 1104C 44 T	→			75	12	063377461010	**MAN7461**
MT 1740	SLT-ULTRA-ORH-RC	Perkins 1104C 44 T	→			75	12	063377461010	**MAN7461**
MT 1745	HSLT-ULTRA	Perkins 1104C 44 T	→			75	12	063377461010	**MAN7461**
MT 732	Tutte	Perkins 1104C 44 T	→			75	12	063377461010	**MAN7461**
MT 928	Tutte	Perkins 1104C 44 T	→			75	12	063377461010	**MAN7461**
MT 932	Tutte	Perkins 1104C 44 T	→			75	12	063377461010	**MAN7461**
MT 940	LT	Perkins 1104C 44 T	→			75	12	063377461010	**MAN7461**
TEREX	Tutte		→			75	12	063377461010	**MAN7461**
MASSEY FERGUSON									
MF 1014	Tutte	Perkins A6.354	01/1983	→		72	12	054022656010	**MAN766**
MF 1114/1134	Tutte	Perkins A6.354	01/1983	→		72	12	054022656010	**MAN766**
MF 154 - F/S	Tutte	Perkins-A3.152	01/1983	→	01/1989	72	12	054022656010	**MAN766**
MF 184 - F	Tutte	Perkins A4.236	01/1985	→	01/1989	72	12	054022656010	**MAN766**
MF 234C - Tracklaying Tractor	Tutte	Perkins AD3.152	01/1983	→		72	12	054022656010	**MAN766**
MF 240	Tutte	Perkins AD3.152	01/1979	→	12/1988	72	12	054022656010	**MAN766**
MF 294 - C/S-Tracklaying Tractor	Tutte	Perkins A4.248	01/1984	→		72	12	054022656010	**MAN766**
MF 3145	Tutte			→		72	12	054022656010	**MAN766**
MF 350	Tutte	Perkins AD3.152	01/1986	→		72	12	054022656010	**MAN766**
MF 355	Tutte	Perkins AT3.152	01/1986	→	01/1990	72	12	054022656010	**MAN766**
MF 360	Tutte	Perkins AT3.152	01/1983	→		72	12	054022656010	**MAN766**
MF 362	Tutte			→		72	12	054022656010	**MAN766**
MF 365	Tutte	Perkins A4.236	01/1983	→		72	12	054022656010	**MAN766**
MF 375	Tutte	Perkins A4.236	01/1983	→		72	12	054022656010	**MAN766**

						A	V	LONG	SHORT
MASSEY FERGUSON									
MF 390 T	Tutte	Perkins A4.236	01/1983	→		72	12	054022656010	**MAN766**
MF 398	Tutte	Perkins AT4.236	01/1983	→		72	12	054022656010	**MAN766**
MF 399	Tutte	Perkins A6.354.4	01/1983	→		72	12	054022656010	**MAN766**
MF 4292	Tutte	Sisu 420DS; 4cyl.	06/2009	→		72	12	054022656010	**MAN766**
MF 4297	Tutte	Sisu 420DS; 4cyl.	06/2009	→		72	12	054022656010	**MAN766**
MF 4299	Tutte	Sisu 420DSA; 4cyl.	06/2009	→		72	12	054022656010	**MAN766**
MF 460 XTRA	Tutte	Sisu 44DTA; 4cyl.	06/2009	→		72	12	054022656010	**MAN766**
MF 470 XTRA	Tutte	Sisu 44DTA; 4cyl.	06/2009	→		72	12	054022656010	**MAN766**
MF 480 XTRA	Tutte	Sisu 44DTA; 4cyl.	06/2009	→		72	12	054022656010	**MAN766**
MF 6130	Tutte	1004-4T	01/1992	→	01/1997	72	12	054022656010	**MAN766**
MF 6150	Tutte	1004-4THR	01/1992	→		72	12	054022656010	**MAN766**
MF 6160	Tutte	1006-6	01/1995	→	01/1997	72	12	054022656010	**MAN766**
MF 6170	Tutte	1006-6	01/1996	→		72	12	054022656010	**MAN766**
MF 6180	Tutte	1006-6T	01/1996	→		72	12	054022656010	**MAN766**
MF 6190	Tutte		01/1996	→		72	12	054022656010	**MAN766**
MF 6280	Tutte	1006-60T	01/1999	→	01/2000	72	12	054022656010	**MAN766**
MF 6290	Tutte	1006-60T	01/1999	→	01/2000	72	12	054022656010	**MAN766**
CRAWLER TRACTOR	MF 254	Perkins AD3.152	01/1984	→		72	12	054022656010	**MAN766**
MCCORMICK									
V - 60	Tutte	1103D		→		72	12	054022656010	**MAN766**
V - 70	Tutte	1104D-44		→		72	12	054022656010	**MAN766**
V - 80	Tutte	1104D-44		→		72	12	054022656010	**MAN766**
NEW HOLLAND									
TM115	Tutte		01/2000	→		120	12	063321753010	**MAN1172**
TM115	Tutte		01/1999	→	01/2002	120	12	063321753010	**MAN1172**
TM120	Tutte		01/2008	→		120	12	063321753010	**MAN1172**
TM125	Tutte		01/2000	→		120	12	063321753010	**MAN1172**
TM125	Tutte		01/1999	→	01/2002	120	12	063321753010	**MAN1172**
TM130	Tutte		01/2008	→		120	12	063321753010	**MAN1172**
TM135	Tutte			→		120	12	063321753010	**MAN1172**
TM135	Tutte		01/1999	→	01/2002	120	12	063321753010	**MAN1172**
TM140	Tutte		01/2008	→		120	12	063321753010	**MAN1172**
TM150	Tutte		01/2000	→		120	12	063321753010	**MAN1172**
TM150	Tutte		01/1999	→	01/2002	120	12	063321753010	**MAN1172**
TM155	Tutte		01/2008	→		120	12	063321753010	**MAN1172**
TM155	Tutte		01/2002	→		120	12	063321753010	**MAN1172**
TM165	Tutte		01/1999	→	01/2002	120	12	063321753010	**MAN1172**
TM165	Tutte		01/1999	→		120	12	063321753010	**MAN1172**
TM175	Tutte		01/2008	→		120	12	063321753010	**MAN1172**
TM190	Tutte		01/2008	→		120	12	063321753010	**MAN1172**
TM190	Tutte		01/2002	→		120	12	063321753010	**MAN1172**

						A	V	LONG	SHORT
ONAN (USA)									
ALL MODELS - 24V System	Tutte		01/1989	→	01/1994	45	24	063534882060	**MAN2014**
PERKINS									
903-27	Tutte	3 cyl		→		72	12	054022656010	**MAN766**
DIESEL ENGINE	O SERIES			→		72	12	054022656010	**MAN766**
Q20	Tutte			→		72	12	054022656010	**MAN766**
ENGINE	Engine for Tractors Application			→		65	12	063377460010	**MAN7460**
ENGINE	Engine for Tractors Application			→		85	12	063377462010	**MAN7462**
ENGINE	Engine for Tractors Application			→		120	12	063377464010	**MAN7464**
ENGINE	Engine for Tractors Application			→		55	24	063377465010	**MAN7465**
ENGINE	Engine for Tractors Application			→		80	24	063377466010	**MAN7466**
STEYR									
FARM	8055	WD311.46	10/1992	→		55	12	063534881850	**MAN2013**
FARM	8060T	WD311.87	02/1987	→		55	12	063534881850	**MAN2013**
FARM	8065	WD311.85	09/1986	→		55	12	063534881850	**MAN2013**
FARM	8070	WD311.43,44	10/1992	→		55	12	063534881850	**MAN2013**
FARM	8075	WD411.45,46	10/1992	→		55	12	063534881850	**MAN2013**
FARM	8080	WD411.89,90	06/1984	→		55	12	063534881850	**MAN2013**
FARM	8085	WD411.92	10/1992	→		55	12	063534881850	**MAN2013**
FARM	8090	WD411.87,88	10/1992	→		55	12	063534881850	**MAN2013**
FARM	8110	WD611.42,43	10/1992	→		55	12	063534881850	**MAN2013**
FARM	8130	WD611.87,88	10/1992	→		55	12	063534881850	**MAN2013**
FARM	8150	WD612.87	10/1992	→		55	12	063534881850	**MAN2013**
FARM	8165	WD612.86	10/1992	→		55	12	063534881850	**MAN2013**
FARM	8320	WD615.85,87	05/1987	→	06/1989	55	12	063534881850	**MAN2013**
TEREX									
Backhoe Loaders - Center Mount	TX760B	1104D-44T; 4-cyl, 94HP		→		75	12	063377461010	**MAN7461**
Backhoe Loaders - Center Mount	TX860B	1104D-44T, 4-cyl; 94HP		→		75	12	063377461010	**MAN7461**
Backhoe Loaders - Center Mount	TX870B	1104D-44T; 4-cyl; 94HP		→		75	12	063377461010	**MAN7461**
Backhoe Loaders - Sideshift	860 ELITE	1104D-44T; 4-cyl, 94HP		→		75	12	063377461010	**MAN7461**
Backhoe Loaders - Sideshift	860 SX	1104D-44T; 4-cyl; 94HP		→		75	12	063377461010	**MAN7461**

					A	V	LONG	SHORT
TEREX								
Backhoe Loaders - Sideshift	880 ELITE	1104D-44T; 4-cyl; 94HP		→	75	12	063377461010	**MAN7461**
Backhoe Loaders - Sideshift	880 SX	1104D-44T; 4-cyl; 94HP		→	75	12	063377461010	**MAN7461**
Backhoe Loaders - Sideshift	970 ELITE	1104D-44T, 4-cyl; 94HP		→	75	12	063377461010	**MAN7461**
Backhoe Loaders - Sideshift	980 ELITE	1104D-44T; 4-cyl; 94HP		→	75	12	063377461010	**MAN7461**
Backhoe Loaders - Sideshift	TLB840	1104D-44TA; 4-cyl; 94HP		→	75	12	063377461010	**MAN7461**
TIMBERJACK								
FORESTRY - PROCESSOR	FELLER BUN-CHERS - 740		01/2001	→	45	24	063534882060	**MAN2014**
FORESTRY - PROCESSOR	FELLER BUN-CHERS - 840		01/2001	→	45	24	063534882060	**MAN2014**
TRACK MARSHALL								
D Series	D 110	Steyr-WD611.88	01/1990	→	55	12	063534881850	**MAN2013**
D Series	D 135	Steyr-WD612.87	01/1990	→	55	12	063534881850	**MAN2013**
D Series	D 150	Steyr-WD612.86	01/1990	→	55	12	063534881850	**MAN2013**
D Series	D 642	Steyr-WD411.44	01/1990	→	55	12	063534881850	**MAN2013**
D Series	D 644	Steyr-WD411.44	01/1990	→	55	12	063534881850	**MAN2013**
D Series	D 742	Steyr-WD411.90	01/1990	→	55	12	063534881850	**MAN2013**
D Series	D 744	Steyr-WD411.90	01/1990	→	55	12	063534881850	**MAN2013**
D Series	D 842	Steyr-WD411.88	01/1990	→	55	12	063534881850	**MAN2013**
D Series	D 844	Steyr-WD411.88	01/1990	→	55	12	063534881850	**MAN2013**
D Series	D 944	Steyr-WD611.43	01/1990	→	55	12	063534881850	**MAN2013**
VALTRA DO BRASIL (VALMET)								
A650	Tutte	Sisu 320D 3cyl.	01/2010	→	72	12	054022656010	**MAN766**
A750	Tutte	Sisu 320DS 3cyl.	06/2009	→	72	12	054022656010	**MAN766**
A850	Tutte	Sisu 320DS 3cyl.	06/2009	→	72	12	054022656010	**MAN766**
A950	Tutte	Sisu 420DS 4cyl.	08/2009	→	72	12	054022656010	**MAN766**
A990	Tutte	Sisu 420DS 4cyl.	08/2009	→	72	12	054022656010	**MAN766**
BF65	Tutte	Sisu 320D 3cyl.	03/2008	→	72	12	054022656010	**MAN766**
BF75	Tutte	Sisu 320DS 3cyl.	03/2008	→	72	12	054022656010	**MAN766**
BH145	Tutte	Sisu 620DS 6cyl.	03/2008	→	72	12	054022656010	**MAN766**
BH145	Tutte	Sisu 620DS; 6cyl.	03/2008	→	72	12	054022656010	**MAN766**
BH180	Tutte	Sisu 620DS; 6cyl.	03/2010	→	72	12	054022656010	**MAN766**
BH185i	Tutte	Sisu 620DSA; 6cyl.	03/2008	→	72	12	054022656010	**MAN766**
BM100	Tutte	Sisu 420DS; 4cyl.	03/2008	→	72	12	054022656010	**MAN766**
VM MOTORI								
HR - 394HPT	Tutte		01/1986	→	55	12	063534881850	**MAN2013**
HR - 492HT9	Tutte		09/1980	→	55	12	063534881850	**MAN2013**
HR - 494HP	Tutte		01/1986	→	55	12	063534881850	**MAN2013**

						A	V	LONG	SHORT
VM MOTORI									
HR - 494HT10	Tutte		03/1986	→		55	12	063534881850	**MAN2013**
HR - 694H,HT	Tutte		01/1984	→	12/1990	55	12	063534881850	**MAN2013**

Applicazione per codice
Buyers guide
Zuordnung nach Bestellnummer
Affectations par références
Aplicación por referencia
Aplicação por código
Εφαρμογές ανά κωδικό
Zastosowanie dla kodu
Применение по коду
Koda göre uygulama

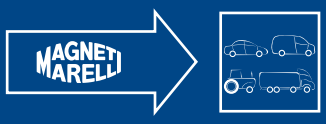




054022384010 MAN653 55A 12V

AUSTIN	
1000-Series MK II-1100	01/1970 → 12/1974
1000-Series MK II-1300	01/1970 → 12/1974
1000-Series MK II-1300 GT	01/1970 → 12/1974
ALLEGRO 2 volumi /Coda spiovente (ADO 67)-1750	01/1975 → 12/1977
ALLEGRO 2 volumi /Coda spiovente (ADO 67)-1.	05/1973 → 12/1977
ALLEGRO 2 volumi /Coda spiovente (ADO 67)-1.3	05/1973 → 12/1982
ALLEGRO 2 volumi /Coda spiovente (ADO 67)-1.5 Super	05/1973 → 12/1977
ALLEGRO Tre volumi-1.3	12/1979 → 03/1982
MAXI-1500	04/1969 → 12/1977
MAXI-1750	04/1969 → 12/1977
MAXI-1750 HL	10/1972 → 12/1977
MINI-0.9	01/1970 → 08/1980
MINI MK I-850	01/1970 → 04/1977
MINI MK I-1000	01/1969 → 12/1981
MINI MK I-1275 GT	01/1970 → 12/1974
MONTEGO (XE)-2.0	04/1984 → 12/1986
MONTEGO (XE)-2.0 Mayfair	04/1984 → 12/1986
MONTEGO Station wagon (XE)-2.0	10/1984 → 12/1986
MONTEGO Station wagon (XE)-2.0 HLI	10/1984 → 08/1988
FORD	
CAPRI (ECJ)-1600	08/1972 → 02/1974
CAPRI (ECJ)-1700	12/1968 → 08/1972
CAPRI (ECJ)-2000	02/1969 → 12/1972
CAPRI (ECJ)-2300	02/1969 → 02/1974
CAPRI (ECJ)-2600	08/1970 → 12/1973
CAPRI (ECJ)-1600 GT	01/1969 → 10/1972
CAPRI II (GECP)-1.3	02/1974 → 08/1977
CAPRI II (GECP)-1.6	02/1974 → 12/1977
CAPRI II (GECP)-2.0	04/1974 → 12/1977
CAPRI II (GECP)-2.3	02/1974 → 12/1977
CAPRI II (GECP)-3.0	02/1974 → 12/1977
CAPRI III (GECP)-1.3	01/1978 → 06/1985
CAPRI III (GECP)-2.0	01/1978 → 12/1985
CAPRI III (GECP)-2.3 Super	06/1979 → 12/1985
CAPRI III (GECP)-2.8 Super Injection	01/1981 → 04/1987
CAPRI III (GECP)-3.0	01/1978 → 12/1981
ESCORT '81 Express (AVA)-1.1	03/1981 → 12/1985
ESCORT '81 Express (AVA)-1.3	03/1981 → 12/1985
ESCORT '86 Express (AVF)-1.1	05/1986 → 12/1988
ESCORT '86 Express (AVF)-1.3	02/1986 → 07/1990




054022384010 MAN653 55A 12V

FORD	
ESCORT '86 Express (AVF)-1.4 i	02/1986 → 07/1990
ESCORT '91 Express (AVL)-1.3	01/1991 → 12/1994
ESCORT '91 Express (AVL)-1.4	07/1990 → 12/1994
ESCORT '95 Furgonato (AVL)-1.4	01/1995 →
ESCORT II (ATH)-1.1	06/1975 → 12/1976
ESCORT II (ATH)-1.3	01/1975 → 08/1980
ESCORT II (ATH)-1.6 RS	01/1975 → 10/1976
ESCORT II Station wagon-1.1	04/1975 → 12/1976
ESCORT II Station wagon-1.3	04/1975 → 12/1976
ESCORT III (GAA)-1.1	09/1980 → 12/1985
ESCORT III (GAA)-1.3	01/1982 → 05/1983
ESCORT III (GAA)-1.6	09/1980 → 12/1985
ESCORT III (GAA)-1.6 RS Turbo	11/1984 → 12/1985
ESCORT III (GAA)-1.6 XR3i	10/1982 → 12/1985
ESCORT III (GAA)-RS 1600i	05/1982 → 12/1985
ESCORT IV (GAF, AWF, ABFT)-1.1	01/1987 → 07/1990
ESCORT IV (GAF, AWF, ABFT)-1.3	01/1986 → 12/1988
ESCORT IV (GAF, AWF, ABFT)-1.3 (GAF)	07/1988 → 10/1990
ESCORT IV (GAF, AWF, ABFT)-1.4	01/1986 → 07/1990
ESCORT IV (GAF, AWF, ABFT)-1.6	01/1986 → 07/1990
ESCORT IV (GAF, AWF, ABFT)-1.6 i	01/1986 → 07/1990
ESCORT IV (GAF, AWF, ABFT)-1.6 Turbo RS	01/1986 → 12/1988
ESCORT IV (GAF, AWF, ABFT)-1.6 XR3i	01/1986 → 08/1989
ESCORT IV Cabriolet (ALF)-1.4	01/1986 → 07/1990
ESCORT IV Cabriolet (ALF)-1.6	01/1986 → 12/1987
ESCORT IV Cabriolet (ALF)-1.6 i	01/1986 → 07/1990
ESCORT IV Cabriolet (ALF)-1.6 XR3i	01/1986 → 08/1989
ESCORT IV Station wagon (AWF, AVF)-1.1	01/1987 → 09/1990
ESCORT IV Station wagon (AWF, AVF)-1.3	01/1986 → 12/1988
ESCORT IV Station wagon (AWF, AVF)-1.4	01/1986 → 07/1990
ESCORT IV Station wagon (AWF, AVF)-1.6	01/1986 → 12/1988
ESCORT IV Station wagon (AWF, AVF)-1.6 i	01/1986 → 12/1988
ESCORT V (GAL)-1.6	07/1990 → 08/1992
ESCORT V Station wagon (GAL, AVL)-1.6	07/1990 → 08/1992
ESCORT VI Cabriolet (ALL)-1.4	12/1992 → 04/1994
ESCORT VI Cabriolet (ALL)-1.4 i	02/1994 → 12/1994
ESCORT VI Station wagon (GAL)-1.4	09/1992 → 12/1994
ESCORT VI Station wagon (GAL)-1.6 i 16V	09/1992 → 12/1994
ESCORT VI Tre volumi (GAL)-1.4	08/1993 → 12/1994
ESCORT VI Tre volumi (GAL)-1.6 i 16V	08/1993 → 12/1994
ESCORT VII (GAL, AAL, ABL)-1.3	01/1995 → 10/1998
ESCORT VII (GAL, AAL, ABL)-1.4	01/1995 → 10/1998
ESCORT VII Station wagon (GAL, ANL)-1.3	01/1995 → 10/1998
ESCORT VII Station wagon (GAL, ANL)-1.4	01/1995 → 02/1999




054022384010 MAN653 55A 12V

FORD	
ESCORT VII Tre volumi (GAL, AFL)-1.3	01/1995 → 02/1999
ESCORT VII Tre volumi (GAL, AFL)-1.4	01/1995 → 02/1999
FIESTA Furgonato (F3L, F5L)-1.3	09/1991 → 02/1996
FIESTA Furgonato (FVD)-1.0	08/1983 → 11/1989
FIESTA Furgonato (J5_, J3_)-1.3	02/1996 →
FIESTA Furgonato (WFVT)-1.0 (WFVT)	10/1977 → 11/1986
FIESTA Furgonato (WFVT)-1.1 (WFVT)	10/1977 → 11/1986
FIESTA I (GFBT)-0.9	05/1976 → 08/1983
FIESTA I (GFBT)-1.1	05/1976 → 08/1983
FIESTA I (GFBT)-1.3	08/1977 → 08/1983
FIESTA I (GFBT)-1.6 XR2	08/1981 → 08/1983
FIESTA II (FBD)-1.0	01/1986 → 11/1989
FIESTA II (FBD)-1.1 (FBD)	01/1986 → 02/1989
FIESTA II (FBD)-1.4 (FBD)	10/1985 → 11/1989
FIESTA II (FBD)-1.6	01/1985 → 02/1989
FIESTA II (FBD)-1.6 XR2 (FBD)	03/1984 → 02/1989
FIESTA III (GFJ)-1.0	03/1989 → 12/1995
FIESTA III (GFJ)-1.3	01/1991 → 12/1992
FIESTA IV (JA_, JB_)-1.3 i	08/1995 → 01/2002
GRANADA (GGTL, GGFL)-2.0	01/1975 → 08/1977
GRANADA (GGTL, GGFL)-2.3	01/1972 → 08/1977
GRANADA (GU)-1.6	07/1981 → 08/1985
GRANADA (GU)-1.7	08/1977 → 12/1981
GRANADA (GU)-1.9 D	08/1977 → 08/1982
GRANADA (GU)-2.0	08/1977 → 07/1979
GRANADA (GU)-2.3	08/1977 → 08/1985
GRANADA (GU)-2.5 D	08/1982 → 04/1985
GRANADA (GU)-2.8	08/1977 → 08/1985
GRANADA (GU)-2.8 i	08/1977 → 04/1985
GRANADA Coupe (GGCL)-2.3	01/1972 → 02/1976
GRANADA Station wagon (GGNL)-2.0	01/1975 → 07/1977
GRANADA Station wagon (GGNL)-2.3	01/1972 → 02/1976
GRANADA Station wagon (GNU)-1.7	08/1977 → 07/1981
GRANADA Station wagon (GNU)-2.0	08/1977 → 04/1985
GRANADA Station wagon (GNU)-2.3	08/1977 → 08/1985
GRANADA Station wagon (GNU)-2.5 D	08/1982 → 04/1985
GRANADA Station wagon (GNU)-2.8	08/1977 → 08/1985
GRANADA Station wagon (GNU)-2.8 i	08/1977 → 04/1985
ORION II (AFF)-1.3	01/1986 → 07/1990
ORION II (AFF)-1.4	01/1986 → 07/1990
ORION II (AFF)-1.4 Cat.	02/1987 → 07/1990
ORION II (AFF)-1.6	12/1985 → 07/1990
SIERRA (GBG, GB4)-2.8 i	08/1987 → 12/1988
SIERRA 2 volumi /Coda spiovente (GBC)-2.0	08/1982 → 10/1984

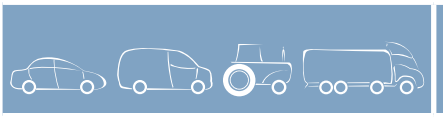


054022384010 MAN653 55A 12V

FORD	
SIERRA 2 volumi /Coda spiovente (GBC)-2.8 XR4i	08/1982 → 12/1985
SIERRA 2 volumi /Coda spiovente (GBC, GBG)-2.8 i	01/1987 → 12/1988
SIERRA 2 volumi /Coda spiovente (GBC, GBG)-2.8 i XR 4x4	01/1987 → 12/1988
SIERRA Station wagon (BNC)-2.0	08/1982 → 10/1984
SIERRA Station wagon (BNC)-2.8 XR4i	08/1982 → 12/1985
SIERRA Station wagon (BNG)-2.8 i 4x4	01/1987 → 12/1988
TAUNUS (GBTS, GBFS, CBTS)-2.0	12/1975 → 07/1979
TAUNUS (GBTS, GBFS, CBTS)-2.3	12/1975 → 07/1979
TAUNUS '80 (GBS, GBNS)-2.3	08/1979 → 07/1982
TAUNUS '80 Turnier (GBNS)-2.0	08/1979 → 07/1981
TAUNUS '80 Turnier (GBNS)-2.3	08/1979 → 07/1982
TAUNUS Turnier (GBNS)-2.0	12/1975 → 07/1979
TAUNUS Turnier (GBNS)-2.3	12/1975 → 07/1979
TRANSIT Autobus (72E, 73E)-1.5 1000 (72E2A)	01/1971 → 05/1973
TRANSIT Autobus (72E, 73E)-1.5 900 (7300)	01/1971 → 05/1973
TRANSIT Autobus (72E, 73E)-1.7 FT 100 (72E2A)	04/1971 → 03/1978
TRANSIT Autobus (V_ _)-2.4 D (VAS, VBL, VIL, VUL, VZS)	04/1980 → 05/1984
TRANSIT Autobus (V_ _)-2.5 D (VAS, VBL, VIL, VUL, VZS)	10/1983 → 02/1986
TRANSIT Furgonato (72E, 71E)-1.5 (72E1A)	01/1971 → 05/1973
TRANSIT Furgonato (72E, 71E)-1.7 FT 100	04/1971 → 03/1978
TRANSIT Furgonato (V_ _)-2.4 D (VVS)	04/1980 → 05/1984
TRANSIT Furgonato (V_ _)-2.5 D (VVL)	01/1984 → 10/1986
TRANSIT Pianale piatto/Telaio (74E)-1.5	01/1971 → 05/1973
TRANSIT Pianale piatto/Telaio (74E)-1.7 FT 100	04/1971 → 03/1978
TRANSIT Pianale piatto/Telaio (V_ _)-2.4 D (VGL, VSL, VTL, VCS, VDS)	04/1980 → 05/1984
TRANSIT Pianale piatto/Telaio (V_ _)-2.5 D (VGL, VSL, VTL, VCS, VDS)	01/1984 → 10/1986
INNOCENTI	
MINI-1.0	05/1974 → 12/1976
RENAULT	
17-1.6	03/1972 → 04/1977
17-1.6 Gordini	05/1977 → 06/1977
15 (130_)-1.3 (1300)	03/1972 → 12/1977
15 (130_)-1.6 (1302)	03/1972 → 12/1976
16 (115_)-1.5	09/1965 → 12/1970
16 (115_)-1.6 TA	01/1976 → 07/1979




054022384010 MAN653 55A 12V

RENAULT			
16 (115_)-1.6 TL (1152, 1153, 1157)	01/1971	→	12/1977
16 (115_)-1.6 TS (1151, 1154)	09/1968	→	12/1976
16 (115_)-1.6 TX (1156)	06/1974	→	07/1979
ROVER			
MONTEGO-2.0 D Turbo	10/1988	→	12/1993
MONTEGO Estate (XE)-2.0 Turbo-D	01/1993	→	12/1993
VAUXHALL			
VIVA-1256	01/1972	→	10/1975
VIVA Coupe-1256 E	01/1972	→	10/1975
VIVA Station wagon-1256	01/1972	→	10/1975

054022581010 MAN649 55A 12V

FORD			
ESCORT '81 Express (AVA)-1.6 D	02/1984	→	02/1986
ESCORT '86 Express (AVF)-1.1	05/1986	→	07/1990
ESCORT '86 Express (AVF)-1.3	02/1986	→	12/1988
ESCORT '86 Express (AVF)-1.6 D	02/1986	→	12/1989
ESCORT '91 Express (AVL)-1.4	01/1991	→	12/1994
ESCORT III (GAA)-1.6	05/1983	→	07/1986
ESCORT III (GAA)-1.6 D	02/1984	→	12/1985
ESCORT III (GAA)-1.6 i (GAA)	07/1985	→	12/1985
ESCORT III Cabriolet (ALD)-1.6	09/1983	→	12/1985
ESCORT III Station wagon (AWA)-1.3	01/1982	→	12/1985
ESCORT III Station wagon (AWA)-1.6	01/1982	→	12/1985
ESCORT III Station wagon (AWA)-1.6 D	02/1984	→	12/1985
ESCORT IV (GAF, AWF, ABFT)-1.1	01/1986	→	07/1990
ESCORT IV (GAF, AWF, ABFT)-1.4	01/1986	→	10/1990
ESCORT IV (GAF, AWF, ABFT)-1.6 D	01/1986	→	12/1988
ESCORT IV (GAF, AWF, ABFT)-1.6 Turbo RS	01/1986	→	07/1990
ESCORT IV (GAF, AWF, ABFT)-1.6 XR3i	01/1986	→	08/1989
ESCORT IV Cabriolet (ALF)-1.4	01/1986	→	07/1990
ESCORT IV Station wagon (AWF, AVF)-1.6 D	01/1986	→	12/1988
ESCORT V (GAL)-1.3	07/1990	→	09/1992
ESCORT V Station wagon (GAL, AVL)-1.3	09/1991	→	09/1992
ESCORT V Station wagon (GAL, AVL)-1.4	01/1991	→	09/1992
FIESTA II (FBD)-1.1 (FBD)	05/1986	→	02/1989
FIESTA II (FBD)-1.4 (FBD)	10/1985	→	11/1989
FIESTA II (FBD)-1.6 D (FBD)	04/1984	→	02/1989
FIESTA II (FBD)-1.6 XR2 (FBD)	04/1984	→	02/1989
GRANADA (GU)-1.6	07/1981	→	12/1984
GRANADA (GU)-1.9 D	01/1978	→	08/1982
GRANADA (GU)-2.0	01/1985	→	08/1985
ORION I (AFD)-1.3	07/1983	→	03/1986
ORION I (AFD)-1.6	07/1983	→	03/1986
ORION I (AFD)-1.6 D	02/1984	→	03/1986




054022581010 MAN649 55A 12V

FORD			
ORION I (AFD)-1.6 i	07/1983	→	03/1986
ORION II (AFF)-1.3	12/1985	→	07/1990
ORION II (AFF)-1.4	01/1986	→	07/1990
ORION II (AFF)-1.6 D	12/1985	→	01/1989
ORION II (AFF)-1.6 i	03/1986	→	07/1990
ORION II (AFF)-1.6 i Cat.	03/1986	→	07/1990
ORION III (GAL)-1.3	07/1990	→	12/1993
ORION III (GAL)-1.4	07/1990	→	12/1993
ORION III (GAL)-1.6	07/1990	→	12/1992
ORION III (GAL)-1.6 i 16V	07/1992	→	12/1993
P 100 I-1.6	04/1982	→	12/1984
P 100 II-2.0	11/1988	→	12/1992
SCORPIO I (GAE, GGE)-1.8	05/1985	→	01/1992
SCORPIO I (GAE, GGE)-2.0 i	05/1985	→	01/1992
SCORPIO I (GAE, GGE)-2.8 i	04/1985	→	11/1986
SCORPIO I Tre volumi (GGE)-1.8	09/1987	→	10/1988
SIERRA (GBG, GB4)-1.6	01/1987	→	02/1993
SIERRA (GBG, GB4)-1.8	10/1987	→	12/1988
SIERRA (GBG, GB4)-2.0 i	01/1987	→	02/1993
SIERRA (GBG, GB4)-2.0 i Cat.	01/1987	→	02/1993
SIERRA 2 volumi /Coda spiovente (GBC)-1.3	08/1982	→	12/1983
SIERRA 2 volumi /Coda spiovente (GBC)-2.0 i	03/1985	→	12/1986
SIERRA 2 volumi /Coda spiovente (GBC, GBG)-1.6	01/1987	→	02/1993
SIERRA 2 volumi /Coda spiovente (GBC, GBG)-1.8	10/1987	→	05/1988
SIERRA 2 volumi /Coda spiovente (GBC, GBG)-2.0 i	01/1987	→	02/1993
SIERRA Station wagon (BNC)-2.0	03/1985	→	12/1986
SIERRA Station wagon (BNG)-1.6	01/1987	→	02/1993
SIERRA Station wagon (BNG)-1.8	01/1987	→	05/1988
SIERRA Station wagon (BNG)-2.0	01/1987	→	02/1993
TAUNUS (GBTK)-2000	12/1975	→	02/1976
TAUNUS (GBTS, GBFS, CBTS)-1.3	12/1975	→	07/1979
TAUNUS (GBTS, GBFS, CBTS)-1.6	12/1975	→	07/1979
TAUNUS '80 (GBS, GBNS)-1.6	07/1979	→	07/1982
TAUNUS '80 Turnier (GBNS)-1.3	07/1979	→	07/1982
TAUNUS '80 Turnier (GBNS)-1.6	07/1979	→	07/1982
TAUNUS '80 Turnier (GBNS)-2.0	07/1979	→	07/1982
TAUNUS Turnier (GBNS)-1.3	12/1975	→	07/1979
TAUNUS Turnier (GBNS)-1.6	12/1975	→	07/1979
TRANSIT Autobus (E_ _)-2.0	09/1991	→	09/1994
TRANSIT Autobus (T_ _)-2.0 (TBS, TCL, TCS) Cat.	01/1986	→	09/1992




054022581010 MAN649 55A 12V

FORD	
TRANSIT Autobus (T_ _)-2.5 D (TBS, TCL, TCS, TEL, TES)	12/1985 → 09/1992
TRANSIT Autobus (V_ _)-2.0 (VAS, VLS, VZS)	01/1980 → 12/1985
TRANSIT Furgonato (E_ _)-2.0	09/1991 → 04/1993
TRANSIT Furgonato (T_ _)-1.6 (TAS)	01/1986 → 07/1991
TRANSIT Furgonato (T_ _)-2.0 (TAL, TAS, TGL, TWS)	01/1986 → 07/1991
TRANSIT Furgonato (T_ _)-2.5 D (TAL, TAS, TGL, TWS)	01/1986 → 09/1991
TRANSIT Furgonato (V_ _)-1.6 (WS)	01/1980 → 12/1985
TRANSIT Furgonato (V_ _)-2.0 (VHL, VVS)	01/1980 → 12/1985
TRANSIT Furgonato (V_ _)-2.5 D (VVL)	01/1985 → 10/1986
TRANSIT Pianale piatto/Telaio (E_ _)-2.0 (EME/L/S, ENE/L/S)	09/1991 → 04/1993
TRANSIT Pianale piatto/Telaio (T_ _)-2.0 (TTE, TTL, TTS)	01/1986 → 12/1991
TRANSIT Pianale piatto/Telaio (T_ _)-2.5 DI (TTE, TTL, TTS, TUL)	01/1986 → 09/1992
TRANSIT Pianale piatto/Telaio (V_ _)-1.6 (VCS, VDS)	01/1980 → 12/1985
TRANSIT Pianale piatto/Telaio (V_ _)-2.0 (VGL, VSL, VTL, VCS, VDS)	01/1980 → 12/1985
TRANSIT Pianale piatto/Telaio (V_ _)-2.5 D (VGL, VSL, VTL, VCS, VDS)	01/1985 → 10/1986
VAUXHALL	
FIRENZA Coupe-1300	01/1972 → 10/1973
FIRENZA Coupe-1800	01/1972 → 10/1973
VICTOR-1600	03/1969 → 09/1972
VICTOR-1800	10/1972 → 10/1976
VICTOR-2000	01/1967 → 09/1972
VICTOR Station wagon-1800	10/1972 → 10/1976
VIVA-1600	01/1968 → 10/1972
VIVA-1800	01/1973 → 10/1979
VIVA Station wagon-1600	10/1970 → 10/1972
VIVA Station wagon-1800	01/1973 → 10/1978
VX-2000 4/90	01/1969 → 10/1971

054022585010 MAN652 70A 12V

FORD	
ESCORT '86 Express (AVF)-1.8 D	01/1989 → 07/1990
ESCORT IV (GAF, AWF, ABFT)-1.8 D	01/1989 → 07/1990
ESCORT IV Station wagon (AWF, AVF)-1.8 D	01/1989 → 07/1990
FIESTA Furgonato (F3L, F5L)-1.8 D	09/1991 → 02/1996
FIESTA Furgonato (FVD)-1.8 D (FVJ)	03/1989 → 12/1995

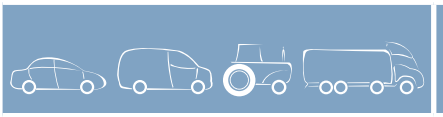


054022585010 MAN652 70A 12V

FORD	
FIESTA III (GFJ)-1.8 D	03/1989 → 12/1995
ORION II (AFF)-1.8 D	01/1989 → 07/1990
SCORPIO I (GAE, GGE)-2.0	01/1989 → 10/1992
SCORPIO I Tre volumi (GGE)-2.0 i	05/1989 → 02/1992
SIERRA (GBG, GB4)-2.0 4x4	01/1990 → 02/1993
SIERRA (GBG, GB4)-2.0 i	01/1990 → 02/1993
SIERRA 2 volumi /Coda spiovente (GBC, GBG)-2.0 i	06/1989 → 02/1993
SIERRA Station wagon (BNG)-2.0 4x4	05/1989 → 02/1993
SIERRA Station wagon (BNG)-2.0 i	05/1989 → 02/1993

054022598010 MAN666 55A 12V

AUSTIN	
MAESTRO (XC)-1.6 Mayfair HLS	10/1984 → 08/1988
MAESTRO (XC)-1.6 MG	01/1984 → 08/1988
MAESTRO (XC)-1.9 D	01/1986 → 09/1992
FORD	
ESCORT '86 Express (AVF)-1.8 D	01/1989 → 07/1990
ESCORT '91 Express (AVL)-1.8 D	07/1990 → 12/1994
ESCORT '95 Furgonato (AVL)-1.8 D	01/1995 → 09/2001
ESCORT '95 Furgonato (AVL)-1.8 Turbo D	12/1995 → 06/2001
ESCORT CLASSIC (AAL, ABL)-1.8 TD	10/1998 → 07/2000
ESCORT CLASSIC Turnier (ANL)-1.8 TD	02/1999 → 07/2000
ESCORT IV (GAF, AWF, ABFT)-1.6 D	01/1986 → 01/1989
ESCORT IV (GAF, AWF, ABFT)-1.8 D	01/1989 → 07/1990
ESCORT IV Station wagon (AWF, AVF)-1.6 D	01/1986 → 01/1989
ESCORT IV Station wagon (AWF, AVF)-1.8 D	01/1989 → 07/1990
ESCORT V (GAL)-1.8 D	08/1990 → 12/1992
ESCORT V Station wagon (GAL, AVL)-1.8 D	08/1990 → 12/1992
ESCORT VI (GAL)-1.8 D	09/1992 → 12/1994
ESCORT VI (GAL)-1.8 TD	06/1993 → 12/1994
ESCORT VI Station wagon (GAL)-1.8 D	09/1992 → 12/1994
ESCORT VI Station wagon (GAL)-1.8 TD	06/1993 → 12/1994
ESCORT VI Tre volumi (GAL)-1.8 D	08/1993 → 12/1994
ESCORT VI Tre volumi (GAL)-1.8 TD	08/1993 → 12/1994
ESCORT VII (GAL, AAL, ABL)-1.8 D	01/1995 → 12/1996
ESCORT VII (GAL, AAL, ABL)-1.8 TD	01/1995 → 10/1998
ESCORT VII (GAL, AAL, ABL)-1.8 Turbo D	12/1995 → 10/1998
ESCORT VII Cabriolet (ALL)-1.8 TD	09/1995 → 12/1996
ESCORT VII Cabriolet (ALL)-1.8 Turbo D	10/1996 → 08/1999
ESCORT VII Station wagon (GAL, ANL)-1.8 D	01/1995 → 02/1999
ESCORT VII Station wagon (GAL, ANL)-1.8 TD	01/1995 → 02/1999
ESCORT VII Station wagon (GAL, ANL)-1.8 Turbo D	12/1995 → 02/1999
ESCORT VII Tre volumi (GAL, AFL)-1.8 D	01/1995 → 12/1996




054022598010 MAN666 55A 12V

FORD			
ESCORT VII Tre volumi (GAL, AFL)-1.8 TD	01/1995	→	10/1998
ESCORT VII Tre volumi (GAL, AFL)-1.8 Turbo D	12/1995	→	02/1999
FIESTA Furgonato (F3L, F5L)-1.8 D	09/1991	→	02/1996
FIESTA Furgonato (FVD)-1.8 D (FVJ)	03/1989	→	12/1995
FIESTA III (GFJ)-1.4	03/1989	→	12/1995
FIESTA III (GFJ)-1.6	01/1989	→	01/1994
FIESTA III (GFJ)-1.6 Turbo (FBJT)	03/1990	→	10/1992
FIESTA III (GFJ)-1.6 XR2i	03/1989	→	01/1994
FIESTA III (GFJ)-1.8 D	03/1989	→	12/1995
ORION II (AFF)-1.8 D	01/1989	→	07/1990
ORION III (GAL)-1.8 D	11/1990	→	12/1993
ORION III (GAL)-1.8 TD	03/1993	→	12/1993
SIERRA (GBG, GB4)-1.8	01/1987	→	05/1988
SIERRA (GBG, GB4)-2.0	01/1987	→	02/1993
SIERRA (GBG, GB4)-2.3 D	01/1987	→	09/1989
SIERRA 2 volumi /Coda spiovente (GBC)-1.3	08/1982	→	12/1984
SIERRA 2 volumi /Coda spiovente (GBC, GBG)-1.8	01/1987	→	05/1988
SIERRA 2 volumi /Coda spiovente (GBC, GBG)-2.0	01/1987	→	02/1993
SIERRA 2 volumi /Coda spiovente (GBC, GBG)-2.3 D	01/1987	→	09/1989
SIERRA Station wagon (BNG)-2.0 i	01/1987	→	02/1993
TRANSIT Autobus (FD_ _, FB_ _, FS_ _, FZ_ _, FC_ _)-2.0 DI (F_E_, F_F_, F_G_)	08/2000	→	05/2006
TRANSIT Autobus (T_ _)-1.6 (TBL, TES)	12/1985	→	01/1989
TRANSIT Autobus (T_ _)-2.0 (TBS, TCL, TCS, TEL, TES)	11/1985	→	12/1991
TRANSIT Autobus (V_ _)-2.0 (VAS, VIL, VLS, VUL, VZS)	01/1985	→	10/1986
TRANSIT Furgonato (FA_ _)-2.0 DI (FAE_, FAF_, FAG_)	08/2000	→	05/2006
TRANSIT Furgonato (T_ _)-1.6 (TAS)	09/1985	→	09/1992
TRANSIT Furgonato (T_ _)-2.0 (TAL, TAS, TGL, TWS)	09/1985	→	12/1991
TRANSIT Furgonato (V_ _)-2.0 (VHL, VVS)	01/1985	→	10/1986
TRANSIT Pianale piatto/Telaio (T_ _)-2.0 (TUL) Cat.	11/1985	→	12/1991
TRANSIT Pianale piatto/Telaio (V_ _)-2.0 (VGL, VSL, VTL, VCS, VDS)	01/1985	→	10/1986
ROVER			
200 (RF)-216 Si	11/1995	→	12/1996
200 (XH)-216	03/1985	→	09/1989




054022598010 MAN666 55A 12V

ROVER			
200 (XH)-216 Vitesse	03/1985	→	09/1989
200 2 volumi /Coda spiovente (XW)-216 GSi	10/1989	→	10/1995
200 Coupe (XW)-216	10/1992	→	02/1996
MAESTRO-1.6	09/1990	→	12/1993
MONTEGO-1.6	10/1990	→	09/1992
MONTEGO Estate (XE)-1.6	10/1990	→	09/1992

054022604010 MAN662 70A 12V

FORD			
ESCORT '86 Express (AVF)-1.4 i	02/1986	→	07/1990
ESCORT '91 Express (AVL)-1.3	07/1990	→	12/1994
ESCORT '91 Express (AVL)-1.4	07/1990	→	12/1994
ESCORT IV (GAF, AWF, ABFT)-1.4	01/1986	→	10/1990
ESCORT IV (GAF, AWF, ABFT)-1.6	01/1986	→	07/1990
ESCORT IV (GAF, AWF, ABFT)-1.6 i	01/1986	→	07/1990
ESCORT IV (GAF, AWF, ABFT)-1.6 Turbo RS	01/1986	→	07/1990
ESCORT IV (GAF, AWF, ABFT)-1.6 XR3i	01/1986	→	08/1989
ESCORT IV Cabriolet (ALF)-1.4	01/1986	→	07/1990
ESCORT IV Cabriolet (ALF)-1.6	01/1986	→	12/1987
ESCORT IV Cabriolet (ALF)-1.6 i	01/1986	→	07/1990
ESCORT IV Cabriolet (ALF)-1.6 XR3i	01/1986	→	08/1989
ESCORT IV Station wagon (AWF, AVF)-1.4	01/1986	→	10/1990
ESCORT IV Station wagon (AWF, AVF)-1.6	01/1986	→	07/1990
ESCORT V (GAL)-1.3	05/1991	→	09/1992
ESCORT V (GAL)-1.4	08/1990	→	09/1992
ESCORT V (GAL)-1.6	07/1990	→	08/1992
ESCORT V Cabriolet (ALL)-1.4	08/1990	→	12/1992
ESCORT V Cabriolet (ALL)-1.6	08/1990	→	09/1992
ESCORT V Station wagon (GAL, AVL)-1.3	09/1991	→	09/1992
ESCORT V Station wagon (GAL, AVL)-1.4	08/1990	→	09/1992
ESCORT V Station wagon (GAL, AVL)-1.6	07/1990	→	08/1992
ESCORT VI (GAL)-1.3	09/1992	→	01/1995
ESCORT VI (GAL)-1.4	09/1992	→	12/1994
ESCORT VI Cabriolet (ALL)-1.4	12/1992	→	12/1994
ESCORT VI Station wagon (GAL)-1.3	09/1992	→	12/1994
ESCORT VI Station wagon (GAL)-1.4	09/1992	→	12/1994
ESCORT VI Station wagon (GAL)-1.6 i 16V	09/1992	→	12/1994
ESCORT VI Tre volumi (GAL)-1.3	08/1993	→	01/1995
ESCORT VI Tre volumi (GAL)-1.4	08/1993	→	12/1994
ESCORT VI Tre volumi (GAL)-1.6 i 16V	08/1993	→	12/1994
ESCORT VII (GAL, AAL, ABL)-1.3	01/1995	→	10/1998
ESCORT VII Tre volumi (GAL, AFL)-1.3	01/1995	→	02/1999
FIESTA Furgonato (FVD)-1.4	10/1986	→	02/1989
FIESTA II (FBD)-1.4 (FBD)	10/1986	→	02/1989
FIESTA III (GFJ)-1.3	06/1991	→	12/1995

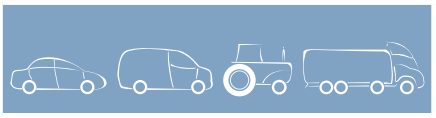


054022604010 MAN662 70A 12V	
FORD	
ORION II (AFF)-1.4	01/1986 → 07/1990
ORION II (AFF)-1.6	01/1986 → 07/1990
ORION III (GAL)-1.3	01/1992 → 12/1993
ORION III (GAL)-1.4	01/1992 → 12/1993
ORION III (GAL)-1.6	07/1990 → 12/1992

054022656010 MAN766 72A 12V	
CASE IH	
385-Tutte	01/1985 → 01/1990
395-Tutte	01/1991 → 01/1993
485-Tutte	01/1985 → 01/1990
495-Tutte	01/1991 → 01/1994
585-Tutte	01/1985 → 12/1990
595-Tutte	01/1991 → 01/1994
685-Tutte	01/1985 → 01/1990
695-Tutte	01/1991 → 01/1994
885-Tutte	01/1985 → 01/1990
895-Tutte	01/1991 → 01/1994
959-Tutte	01/1991 → 01/1994
995-Tutte	01/1991 → 01/1994
1394-Tutte	01/1983 → 01/1988
1494-Tutte	01/1983 → 01/1988
1594-Tutte	01/1983 → 01/1988
3220-Tutte	01/1994 → 01/1997
4210-Tutte	01/1994 → 01/1997
4230-Tutte	01/1994 → 01/1997
4240-Tutte	01/1994 → 01/1997
380B-Tutte	01/1987 → 12/1993
MX5-1-Tutte	01/1996 → 0
JCB LANDPOWER	
BACKHOE LOADERS-3CX-4	01/1994 → 0
BACKHOE LOADERS-4CX	0 → 0
LOADERS-410	0 → 0
LOADERS-412	0 → 0
LOADERS-415	0 → 0
ROUGH TERRAIN FORKLIFTS-4C	0 → 0
LISTER PETER	
DIESEL ENGINE-ALPHA - LPA3	0 → 0
MASSEY FERGUSON	
CRAWLER TRACTOR-MF 254	01/1984 → 0
MF 1014-Tutte	01/1983 → 0
MF 1114/1134-Tutte	01/1983 → 0
MF 154 - F/S-Tutte	01/1983 → 01/1989
MF 184 - F-Tutte	01/1985 → 01/1989
MF 234C - Tracklaying Tractor-Tutte	01/1983 → 0

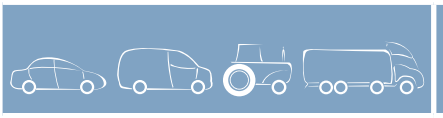


054022656010 MAN766 72A 12V	
MASSEY FERGUSON	
MF 240-Tutte	01/1979 → 12/1988
MF 294 - C/S-Tracklaying Tractor-Tutte	01/1984 → 0
MF 3145-Tutte	0 → 0
MF 350-Tutte	01/1986 → 0
MF 355-Tutte	01/1986 → 01/1990
MF 360-Tutte	01/1983 → 0
MF 362-Tutte	0 → 0
MF 365-Tutte	01/1983 → 0
MF 375-Tutte	01/1983 → 0
MF 390 T-Tutte	01/1983 → 0
MF 398-Tutte	01/1983 → 0
MF 399-Tutte	01/1983 → 0
MF 4292-Tutte	06/2009 → 0
MF 4297-Tutte	06/2009 → 0
MF 4299-Tutte	06/2009 → 0
MF 460 XTRA-Tutte	06/2009 → 0
MF 470 XTRA-Tutte	06/2009 → 0
MF 480 XTRA-Tutte	06/2009 → 0
MF 6130-Tutte	01/1992 → 01/1997
MF 6150-Tutte	01/1992 → 0
MF 6160-Tutte	01/1995 → 01/1997
MF 6170-Tutte	01/1996 → 0
MF 6180-Tutte	01/1996 → 0
MF 6190-Tutte	01/1996 → 0
MF 6280-Tutte	01/1999 → 01/2000
MF 6290-Tutte	01/1999 → 01/2000
MCCORMICK	
V - 60-Tutte	0 → 0
V - 70-Tutte	0 → 0
V - 80-Tutte	0 → 0
PERKINS	
903-27-Tutte	0 → 0
DIESEL ENGINE-O SERIES	0 → 0
Q20-Tutte	0 → 0
ROVER	
800 (XS)-825 D/SD (XS)	01/1990 → 02/1999
800 2 volumi /Coda spiovente (XS)-825 D/SD (XS)	01/1992 → 02/1999
VALTRA DO BRASIL (VALMET)	
A650-Tutte	01/2010 → 0
A750-Tutte	06/2009 → 0
A850-Tutte	06/2009 → 0
A950-Tutte	08/2009 → 0
A990-Tutte	08/2009 → 0




054022656010 MAN766 72A 12V

VALTRA DO BRASIL (VALMET)	
BF65-Tutte	03/2008 → 0
BF75-Tutte	03/2008 → 0
BH145-Tutte	03/2008 → 0
BH180-Tutte	03/2010 → 0
BH185i-Tutte	03/2008 → 0
BM100-Tutte	03/2008 → 0

054022708010 MAN1018 70A 12V

FORD	
TRANSIT Autobus (E_ _)-2.5 DI (EBL, ECL, EDS, EDL)	08/1994 → 03/2000
TRANSIT Autobus (E_ _)-2.5 DI (EBS, EDS, EGL, ESS, EUS)	01/1992 → 07/1994
TRANSIT Autobus (E_ _)-2.5 TD (EBS, EBL, ECL, EDS, EDL, ESS, EUS)	10/1992 → 05/1997
TRANSIT Autobus (E_ _)-2.5 TD (ECL, EDL, EDS, ESL, ESS, EUS)	08/1994 → 05/1997
TRANSIT Autobus (E_ _)-2.5 TD (ECL, EDS, EDL, EGL, ESS, EUS)	09/1991 → 07/1994
TRANSIT Furgonato (E_ _)-2.5 DI (EAL, EAS)	10/1992 → 03/2000
TRANSIT Furgonato (E_ _)-2.5 DI (EAS, EAL)	01/1992 → 06/1994
TRANSIT Furgonato (E_ _)-2.5 TD (EAL, EAS)	08/1994 → 05/1997
TRANSIT Furgonato (E_ _)-2.5 TD (EAS, EAL)	05/1991 → 06/1994
TRANSIT Furgonato (E_ _)-2.5 TDI (EAL, EAS)	08/1994 → 05/1997
TRANSIT Pianale piatto/Telaio (E_ _)-2.5 DI (EME/L/S, ENE/L/S)	01/1992 → 03/2000
TRANSIT Pianale piatto/Telaio (E_ _)-2.5 DI (EML, ENE/L)	05/1999 → 03/2000
TRANSIT Pianale piatto/Telaio (E_ _)-2.5 DI (EML/S, ENL/S)	08/1994 → 03/2000
TRANSIT Pianale piatto/Telaio (E_ _)-2.5 TD (EME/L/S, ENE/L)	09/1991 → 08/1994
TRANSIT TOURNEO-2.5 DI	11/1994 → 05/1997
TRANSIT TOURNEO-2.5 TD	11/1994 → 05/1997

063304087010 MAN873 27A 12V

IVECO	
M-115-17	12/1985 → 12/1991
M-115-17 H	01/1986 → 12/1991
M-135-17	12/1985 → 12/1991
M-135-17 T	12/1985 → 12/1991
M-145-17	02/1986 → 12/1991




063304087010 MAN873 27A 12V

IVECO	
M-159-17	07/1985 → 09/1986
M-175-17	09/1986 → 07/1992
P/PA-159-17 H	07/1985 → 09/1986
P/PA-330-30 H	12/1985 → 12/1992
P/PA-330-30 HT	01/1988 → 12/1992
P/PA-330-30 HW	01/1988 → 12/1992
P/PA-Haubenfahrzeuge-330-30 N	10/1987 → 12/1992
P/PA-Haubenfahrzeuge-330-30 NW	10/1987 → 12/1992
Zeta-109-14	11/1985 → 03/1991
Zeta-109-14 H	11/1985 → 03/1991
Zeta-50-8	12/1985 → 12/1986
Zeta-50-8 H	12/1985 → 12/1986
Zeta-50-8 V	12/1985 → 12/1986
Zeta-50-9	01/1987 → 03/1991
Zeta-50-9 H	01/1987 → 03/1991
Zeta-50-9 V	01/1987 → 03/1991
Zeta-60-10	07/1985 → 12/1986
Zeta-60-10 H	07/1985 → 12/1986
Zeta-60-10 V	07/1985 → 12/1986
Zeta-60-11	01/1987 → 03/1991
Zeta-60-11 V	01/1987 → 03/1991
Zeta-65-12	01/1987 → 03/1991
Zeta-65-12 H	01/1987 → 03/1991
Zeta-65-12 V	01/1987 → 03/1991
Zeta-65-9	01/1987 → 03/1991
Zeta-79-10	07/1985 → 01/1987
Zeta-79-10 H	07/1985 → 01/1987
Zeta-79-10 V	07/1985 → 01/1987
Zeta-79-12	01/1987 → 03/1991
Zeta-79-12 H	01/1987 → 03/1991
Zeta-79-12 V	01/1987 → 03/1991
Zeta-79-14	12/1985 → 03/1991
Zeta-79-14 H	12/1985 → 03/1991
Zeta-79-14 V	12/1985 → 03/1991
Zeta-A 70-14	05/1988 → 12/1992

063310506010 MAN956 105A 12V

DACIA	
LOGAN (LS_)-1.4 (LSOA, LSOC, LSOE, LSOG)	09/2004 → 0
LOGAN (LS_)-1.6 (LSOB, LSOD, LSOF, LSOH)	09/2004 → 0
RENAULT	
CLIO II (BB0/1/2_, CB0/1/2_)-1.4 (B/CB0C)	09/1998 → 05/2005





063310506010 MAN956 105A 12V	
RENAULT	
CLIO II (BB0/1/2_, CB0/1/2_)-1.4 16V (B/CB0L)	10/1999 → 08/2000
CLIO II (BB0/1/2_, CB0/1/2_)-1.4 16V (B/CB0P)	08/2000 → 0
CLIO II (BB0/1/2_, CB0/1/2_)-1.6 (B/CB0D)	09/1998 → 03/2001
KANGOO (KC0/1_)-1.4 (KC0C, KC0H, KC0B, KC0M)	09/1997 → 02/2003
KANGOO Express (FC0/1_)-1.4 (FC0C, FC0B, FC0H, FC0M)	09/1997 → 02/2003
LAGUNA II (BG0/1_)-1.6 16V	02/2005 → 0
THALIA (LB0/1/2_)-1.4	08/2000 → 03/2001
THALIA (LB0/1/2_)-1.6	04/2001 → 05/2001
063310508010 MAN958 120A 12V	
CITROEN	
JUMPER Autobus (230P)-2.8 HDi	09/2000 → 04/2002
JUMPER Autobus (244, Z_)-2.8 HDi	04/2002 → 06/2006
JUMPER Furgonato (230L)-2.8 HDi	09/2000 → 04/2002
JUMPER Furgonato (244)-2.8 HDi	04/2002 → 06/2006
JUMPER Pianale piatto/Telaio (230)-2.8 HDi	09/2000 → 04/2002
JUMPER Pianale piatto/Telaio (244)-2.8 HDi	04/2002 → 06/2006
FIAT	
DUCATO Autobus (244, Z_)-2.8 JTD	04/2002 → 06/2006
DUCATO Furgonato (244)-2.8 JTD	04/2002 → 06/2006
DUCATO Pianale piatto/Telaio (244)-2.8 JTD	04/2002 → 06/2006
PEUGEOT	
BOXER Autobus (230P)-2.8 HDi	10/2000 → 04/2002
BOXER Autobus (244, Z_)-2.8 HDi	04/2002 → 06/2006
BOXER Autobus (244, Z_)-2.8 HDi 4x4	04/2002 → 0
BOXER Furgonato (230L)-2.8 HDi	10/2000 → 04/2002
BOXER Furgonato (244)-2.8 HDi	04/2002 → 06/2006
BOXER Pianale piatto/Telaio (244)-2.8 HDi	04/2002 → 06/2006
BOXER Pianale piatto/Telaio (ZCT_)-2.8 HDi	10/2000 → 11/2001
063320025010 MAN261 30A 24V	
FIAT	
CAMPAGNOLA-2.0	06/1974 → 10/1989
CAMPAGNOLA-2.4 D	06/1974 → 10/1989
IVECO	
M-115-17	01/1986 → 12/1991
M-115-17 H	01/1986 → 12/1991
M-135-17	01/1986 → 12/1991
M-135-17 H	01/1986 → 12/1992
M-135-17 T	01/1986 → 12/1991
M-145-17	02/1986 → 12/1991
M-159-17	12/1985 → 09/1986

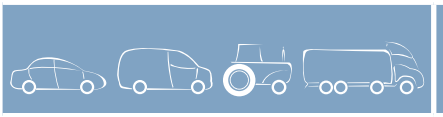



063320025010 MAN261 30A 24V	
IVECO	
M-165-24 R	06/1982 → 09/1986
M-165-24 T	06/1982 → 09/1986
M-175-17	09/1986 → 12/1992
M-175-24	09/1986 → 11/1992
M-175-24 T	09/1986 → 11/1992
MK-80-13 A	01/1983 → 12/1991
MK-80-13 AH	01/1983 → 12/1991
MK-80-13 AT	01/1983 → 12/1991
MK-80-13 AW	01/1983 → 12/1991
MK-80-16 A	01/1983 → 12/1991
MK-80-16 AW	01/1986 → 12/1989
P/PA-190-30 H	04/1987 → 12/1992
P/PA-190-30 HT	01/1990 → 12/1992
P/PA-190-30 HW	04/1987 → 12/1992
P/PA-190-32 AH	01/1983 → 12/1985
P/PA-190-32 AHW	01/1983 → 12/1985
P/PA-260-30 AH	06/1986 → 05/1990
P/PA-260-30 AHT	06/1986 → 05/1990
P/PA-260-30 AHW	06/1986 → 05/1990
P/PA-260-32 AH	01/1983 → 12/1985
P/PA-260-32 AHT	01/1983 → 12/1985
P/PA-260-32 AHW	01/1983 → 12/1985
P/PA-330-30 H	06/1984 → 12/1992
P/PA-Haubenfahrzeuge-120-16 ANW,120-17 ANW	01/1983 → 11/1989
P/PA-Haubenfahrzeuge-190-30 N	04/1987 → 12/1993
P/PA-Haubenfahrzeuge-190-30 NT	04/1987 → 12/1993
TurboStar-190-33	07/1984 → 05/1987
TurboStar-190-33 P	01/1986 → 12/1987
TurboStar-190-33 T	07/1984 → 05/1987
TurboStar-190-36	07/1987 → 06/1990
TurboStar-190-36 P	07/1987 → 12/1993
TurboStar-190-36 T	07/1987 → 12/1993
TurboStar-190-42 T	07/1984 → 12/1990
TurboStar-190-48	03/1989 → 12/1993
TurboTech-220-36 PT	01/1990 → 12/1992
Zeta-109-14	11/1985 → 03/1991
Zeta-109-14 H	11/1985 → 03/1991
Zeta-50-10	01/1979 → 10/1983
Zeta-50-10 H	01/1979 → 10/1983
Zeta-50-10 V	01/1979 → 10/1983
Zeta-50-8	01/1983 → 12/1986
Zeta-50-8 H	01/1983 → 12/1986
Zeta-50-8 V	01/1983 → 12/1986




063320025010 MAN261 30A 24V

IVECO	
Zeta-50-9	01/1987 → 03/1991
Zeta-50-9 H	01/1987 → 03/1991
Zeta-50-9 V	01/1987 → 03/1991
Zeta-60-10	05/1982 → 12/1986
Zeta-60-10 H	05/1982 → 12/1986
Zeta-60-10 V	05/1982 → 12/1986
Zeta-60-11	01/1987 → 03/1991
Zeta-60-11 V	01/1987 → 03/1991
Zeta-60-8	11/1979 → 12/1982
Zeta-65-10	05/1983 → 01/1987
Zeta-65-10 H	05/1983 → 01/1987
Zeta-65-10 V	05/1983 → 01/1987
Zeta-65-12	01/1987 → 03/1991
Zeta-65-12 H	01/1987 → 03/1991
Zeta-65-12 V	01/1987 → 03/1991
Zeta-79-10	01/1983 → 01/1987
Zeta-79-10 H	01/1983 → 01/1987
Zeta-79-10 V	01/1983 → 01/1987
Zeta-79-12	01/1987 → 03/1991
Zeta-79-12 H	01/1987 → 03/1991
Zeta-79-12 V	01/1987 → 03/1991
Zeta-79-13	11/1979 → 12/1983
Zeta-79-14	12/1985 → 03/1991
Zeta-79-14 H	12/1985 → 03/1991
Zeta-79-14 V	12/1985 → 03/1991
Zeta-95-14	07/1983 → 03/1991
Zeta-95-14 H	07/1983 → 03/1991

063320049010 MAN771 65A 12V

ALFA ROMEO	
33 (905)-1.8 TD	01/1986 → 12/1989
33 Sportwagon (905A)-1.8 TD	01/1988 → 12/1989
75 (162B)-1.6 (162.B2B, 162.B2C)	01/1988 → 09/1989
75 (162B)-2.0 TD (162.BD, 162.BG)	05/1985 → 09/1992
75 (162B)-2.4 TD	01/1989 → 02/1992
AR 8 Furgonato (280)-2.4 D	01/1982 → 08/1986
AR 8 Furgonato (280)-2.5 D	09/1986 → 12/1989
AR 8 Pianale piatto/Telaio (280)-2.5 D	09/1986 → 12/1988
FIAT	
131-2.0 D	01/1982 → 08/1984
131-2.5 Diesel	01/1982 → 02/1984
131 SW/Panorama-2.0 D	01/1982 → 08/1984
131 SW/Panorama-2.5 Super Diesel (AF)	01/1982 → 12/1984
ARGENTA (132A)-2500 Diesel	06/1981 → 12/1983
ARGENTA (132A)-2500 Turbodiesel	07/1983 → 08/1985




063320049010 MAN771 65A 12V

FIAT	
DUCATO Furgonato (280)-2.4 D	01/1982 → 12/1985
DUCATO Furgonato (280)-2.5 D	01/1986 → 08/1990
DUCATO Panorama (280)-2.4 D	07/1982 → 12/1985
DUCATO Panorama (280)-2.5 D	01/1986 → 08/1990
LANCIA	
THEMA (834)-2500 Turbo D (834D)	11/1984 → 09/1988
THEMA (834)-2500 Turbo DS (834AE)	06/1988 → 05/1992
THEMA SW (834)-2500 Turbo DS (834D)	03/1987 → 07/1992

063320060010 MAN772 35A 24V

IVECO	
EuroCargo-120 E 15	01/1991 → 0
EuroCargo-120 E 15 K	01/1992 → 0
EuroCargo-120 E 18	01/1992 → 0
EuroCargo-120 E 18 K	01/1992 → 0
EuroCargo-120 E 18 K tector, 120 E 18 DK tector	09/2000 → 0
EuroCargo-120 E 18 tector, 120 E 18 D tector, 120 E 18 DP tector	09/2000 → 0
EuroCargo-120 E 23	01/1992 → 0
EuroCargo-120 E 24 K tector, 120 E 24 DK tector	09/2000 → 0
EuroCargo-120 E 24, 120 E 24 DP tector, 120 E 25 tector	09/2000 → 0
EuroCargo-120 E 28 tector	09/2000 → 0
EuroCargo-120 E28 K tector	09/2000 → 0
EuroCargo-130 E 15	01/1994 → 0
EuroCargo-130 E 15 K	01/1994 → 0
EuroCargo-130 E 18	01/1992 → 0
EuroCargo-130 E 18 K	01/1992 → 0
EuroCargo-130 E 18 K tector, 130 E 18 DK tector	09/2000 → 0
EuroCargo-130 E 18 tector, 130 E 18 D tector, 130 E 18 DP tector	09/2000 → 0
EuroCargo-130 E 23	01/1992 → 0
EuroCargo-130 E 24 K tector, 130 E 24 DK tector	09/2000 → 0
EuroCargo-130 E 24 tector, 130 E 24 D tector, 130 E 24 DP tector	09/2000 → 0
EuroCargo-130 E 28 K tector	09/2000 → 0
EuroCargo-130 E 28 tector	09/2000 → 0
EuroCargo-150 E 15	01/1992 → 12/1996
EuroCargo-150 E 15 K	01/1992 → 12/1996
EuroCargo-150 E 18	01/1992 → 0
EuroCargo-150 E 18 K	01/1992 → 0

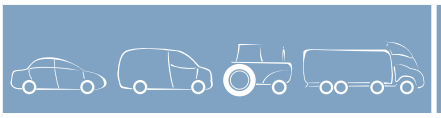


063320060010 MAN772 35A 24V

IVECO

EuroCargo-150 E 18 K tector	09/2000 → 0
EuroCargo-150 E 18 tector	09/2000 → 0
EuroCargo-150 E 23	01/1992 → 0
EuroCargo-150 E 24 K tector	09/2000 → 0
EuroCargo-150 E 24 tector, 150 E 25 tector	09/2000 → 0
EuroCargo-150 E 27, 150 E 27 R	01/1992 → 0
EuroCargo-150 E 28 K tector	09/2000 → 0
EuroCargo-150 E 28 tector	09/2000 → 0
EuroCargo-60 E 10	01/1991 → 08/1996
EuroCargo-60 E 12	01/1991 → 12/1996
EuroCargo-60 E 14	01/1991 → 12/1996
EuroCargo-60 E 14 K	01/1991 → 12/1996
EuroCargo-65 E 10	01/1991 → 12/1996
EuroCargo-65 E 10 K	01/1991 → 12/1996
EuroCargo-65 E 12	01/1991 → 12/2000
EuroCargo-65 E 12 K	01/1991 → 12/2000
EuroCargo-65 E 14	01/1991 → 12/2000
EuroCargo-65 E 14 K	01/1991 → 12/2000
EuroCargo-65 E 15 tector, 65 E 15 P tector	09/2000 → 0
EuroCargo-65 E15	09/2000 → 0
EuroCargo-75 E 12	01/1991 → 12/2000
EuroCargo-75 E 12 K	01/1997 → 0
EuroCargo-75 E 13 tector, 75 E 13 P tector	09/2000 → 0
EuroCargo-75 E 14	01/1991 → 0
EuroCargo-75 E 14 K	01/1997 → 0
EuroCargo-75 E 15 K	01/1991 → 09/2000
EuroCargo-75 E 15 K tector	09/2000 → 0
EuroCargo-75 E 15 tector, 75 E 15 P tector	09/2000 → 0
EuroCargo-75 E 15, 80 E 15	01/1991 → 09/2000
EuroCargo-75 E 17 K, 75 E 18 K tector	09/2000 → 0
EuroCargo-75 E 17, 75 E 17 P, 75 E 18 tector	09/2000 → 0
EuroCargo-75 E 18 K tector	09/2000 → 0
EuroCargo-75 E 18 tector, 75 E 18 P tector	09/2000 → 0
EuroCargo-tector 65 E 13	09/2000 → 0
M-115-17	09/1983 → 12/1991
M-115-17 H	01/1986 → 12/1991
M-135-17	09/1983 → 12/1991
M-135-17 H	01/1986 → 08/1992
M-135-17 T	09/1983 → 12/1991
M-145-17	02/1986 → 12/1991
M-159-17	07/1982 → 09/1986
M-175-17	09/1986 → 07/1992
P/PA-159-17 H	07/1982 → 09/1986
P/PA-190-30 H	09/1987 → 12/1992

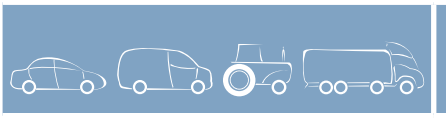


063320060010 MAN772 35A 24V

IVECO

P/PA-190-30 HT	01/1989 → 12/1992
P/PA-190-30 HW	09/1987 → 12/1992
P/PA-330-30 H	12/1985 → 12/1992
P/PA-330-30 HT	01/1988 → 12/1992
P/PA-330-30 HW	01/1988 → 12/1992
P/PA-Haubenfahrzeuge-330-30 N	10/1987 → 12/1992
P/PA-Haubenfahrzeuge-330-30 NW	10/1987 → 12/1992
Zeta-109-14	06/1983 → 03/1991
Zeta-109-14 H	06/1983 → 03/1991
Zeta-50-10	01/1979 → 10/1983
Zeta-50-10 H	01/1979 → 10/1983
Zeta-50-10 V	01/1979 → 10/1983
Zeta-50-8	01/1983 → 12/1986
Zeta-50-8 H	01/1983 → 12/1986
Zeta-50-8 V	01/1983 → 12/1986
Zeta-50-9	01/1987 → 03/1991
Zeta-50-9 H	01/1987 → 03/1991
Zeta-50-9 V	01/1987 → 03/1991
Zeta-60-10	05/1982 → 12/1986
Zeta-60-10 H	05/1982 → 12/1986
Zeta-60-10 V	05/1982 → 12/1986
Zeta-60-11	01/1987 → 03/1991
Zeta-60-11 V	01/1987 → 03/1991
Zeta-60-8	01/1983 → 04/1983
Zeta-65-10	05/1982 → 01/1987
Zeta-65-10 H	05/1982 → 01/1987
Zeta-65-10 V	05/1982 → 01/1987
Zeta-65-12	01/1987 → 03/1991
Zeta-65-12 H	01/1987 → 03/1991
Zeta-65-12 V	01/1987 → 03/1991
Zeta-65-9	01/1987 → 03/1991
Zeta-79-10	01/1983 → 01/1987
Zeta-79-10 H	01/1983 → 01/1987
Zeta-79-10 V	01/1983 → 01/1987
Zeta-79-12	01/1987 → 03/1991
Zeta-79-12 H	01/1987 → 03/1991
Zeta-79-12 V	01/1987 → 03/1991
Zeta-79-13	01/1983 → 06/1983
Zeta-79-14	07/1983 → 03/1991
Zeta-79-14 H	07/1983 → 03/1991
Zeta-79-14 V	07/1983 → 03/1991
Zeta-95-14	07/1983 → 10/1985
Zeta-95-14 H	07/1983 → 10/1985
Zeta-A 70-12	01/1983 → 01/1985




063320060010 MAN772 35A 24V	
IVECO	
Zeta-A 70-14	05/1988 → 12/1992
063321000010 MAN342 45A 12V	
AUTOBIANCHI	
Y10-1.0	05/1985 → 0
Y10-1.0 4WD	12/1986 → 0
Y10-1.0 Cat.	10/1987 → 0
FIAT	
PANDA (141A_)-1000	01/1986 → 12/1992
PANDA (141A_)-1000 4x4	01/1986 → 12/1990
PANDA (141A_)-1000 i.e. Cat.	07/1990 → 03/1997
PANDA (141A_)-1100 Trekking 4x4	01/1992 → 07/2004
PANDA (141A_)-750 (141AI)	01/1986 → 12/1997
PANDA Van (141_)-750	01/1986 → 07/1992
PANDA Van (141_)-1000	01/1986 → 02/1992
PANDA Van (141_)-1000 i.e	08/1992 → 02/2004
TIPO (160)-1.1 (160.AA)	01/1988 → 10/1991
UNO (146A/E)-45 1.0 (146A.ED)	06/1986 → 12/1993
UNO (146A/E)-45 i.e. 1.0	01/1987 → 12/1994
UNO (146A/E)-50 1.1	01/1990 → 12/1993
UNO (146A/E)-50 i.e. 1.1	06/1992 → 12/1993
UNO (146A/E)-60 1.1	04/1989 → 12/1992
LANCIA	
Y10 (156)-1.0 Fire	03/1985 → 02/1990
Y10 (156)-1.0 Fire (156AA)	03/1985 → 02/1992
Y10 (156)-1.0 Fire 4WD	12/1987 → 12/1989
Y10 (156)-1.1 i.e (156AC)	08/1989 → 06/1992
063321011010 MAN349 55A 12V	
FERRARI	
400 i-4.8	05/1979 → 12/1982
512 BB-4.9	07/1981 → 12/1982
FIAT	
124-1200	02/1973 → 07/1975
124-1200 (TA)	01/1971 → 10/1973
124-1400 Special	01/1971 → 12/1972
124-1500 Special	01/1973 → 07/1975
124-1500 Special T	01/1971 → 07/1975
125-1.6 (TA)	07/1971 → 12/1972
125-1.6 Special (TA)	07/1971 → 12/1972
131-1.3 Mirafiori	10/1974 → 12/1982
131-1.3 Super Mirafiori	03/1978 → 12/1980
131-1.4 Mirafiori	11/1980 → 01/1984
131-1.4 Super Mirafiori	04/1981 → 12/1983
131-1.6	11/1976 → 12/1976
131-1.6 (S)	10/1974 → 09/1981




063321011010 MAN349 55A 12V	
FIAT	
131-1.6 Super	03/1978 → 01/1984
131-1.6 Super Mirafiori (A)	03/1979 → 03/1982
131-2.0 Abarth Rally	01/1976 → 07/1980
131-2.0 Racing	06/1978 → 12/1981
131-2.0 Super	01/1981 → 12/1984
132-1.6	04/1972 → 01/1976
132-1.7 GLS (A1)	04/1974 → 12/1976
132-1.7 Special (A1)	04/1972 → 01/1974
132-2.0 i.e.	01/1980 → 12/1982
124 Coupe-1600 (BC 1)	04/1970 → 10/1973
124 Coupe-1600 Sport	08/1972 → 12/1973
124 Spider-1600 Sport (BS)	11/1969 → 12/1973
124 SW-1200	01/1971 → 03/1975
131 SW/Panorama-1.3 Mirafiori (AF)	03/1975 → 03/1982
131 SW/Panorama-1.4 Mirafiori	11/1981 → 01/1984
131 SW/Panorama-1.6 CL (AF1)	03/1975 → 12/1978
131 SW/Panorama-1.6 Super	12/1979 → 12/1981
131 SW/Panorama-2.0 Super	01/1981 → 12/1984
238-SERIE-1.4	01/1969 → 12/1977
242-SERIE Autobus-1.6	01/1979 → 07/1982
242-SERIE Autobus-1.9	01/1979 → 07/1982
242-SERIE Furgonato-1.6	01/1979 → 07/1982
242-SERIE Furgonato-1.9	01/1979 → 07/1982
242-SERIE Furgonato-2.2 D	01/1979 → 08/1980
242-SERIE Furgonato-2.5 D	08/1980 → 07/1982
ARGENTA (132A)-1600	10/1982 → 05/1983
ARGENTA (132A)-2000	01/1983 → 12/1985
ARGENTA (132A)-2000 Volumex	06/1984 → 07/1985
CAMPAGNOLA-2.0	06/1974 → 10/1989
CAMPAGNOLA-2.4 D	06/1974 → 10/1989
CROMA (154)-1600	12/1985 → 12/1987
CROMA (154)-2000 CHT (154.AC)	12/1985 → 12/1987
DUCATO Furgonato (280)-1.9 D	01/1988 → 08/1990
DUCATO Furgonato (280)-1.9 TD	03/1989 → 08/1990
DUCATO Panorama (280)-1.9 D	02/1987 → 08/1990
DUCATO Pianale piatto/Telaio (280)-1.9 D	01/1988 → 08/1990
DUNA Weekend (146 B)-DS 1.7	01/1987 → 12/1990
FIORINO (147)-1.7 Diesel	12/1987 → 12/1990
FIORINO Furgonato (146 Uno)-60 1.7 D	05/1988 → 05/2000
FIORINO Furgonato (146 Uno)-65 1.7 TD	01/1997 → 05/2001
FIORINO Pick up (146)-1.7 D	05/1988 → 12/1990
REGATA (138)-100 Super 1.6	10/1983 → 12/1988
REGATA (138)-60 Diesel 1.7	09/1983 → 03/1989
REGATA (138)-65 Diesel 1.9	04/1984 → 07/1989




063321011010 MAN349 55A 12V

FIAT	
REGATA (138)-85 1.6	01/1984 → 12/1987
REGATA (138)-90 i.e. 1.6	01/1987 → 07/1989
REGATA Weekend-100 1.6 (RF)	09/1984 → 12/1986
REGATA Weekend-100 i.e. 1.6	01/1987 → 12/1988
REGATA Weekend-60 Diesel 1.7	01/1984 → 12/1989
REGATA Weekend-65 Diesel 1.9	04/1984 → 07/1989
REGATA Weekend-90 i.e. 1.6	01/1987 → 07/1989
RITMO I (138A)-125 TC Abarth 2.0	11/1981 → 09/1982
RITMO I (138A)-55 Diesel 1.7	10/1979 → 09/1982
RITMO II (138A)-100 1.6	01/1985 → 12/1987
RITMO II (138A)-105 1.6	01/1983 → 12/1987
RITMO II (138A)-125 TC Abarth 2.0	01/1985 → 12/1987
RITMO II (138A)-60 Diesel 1.7	10/1982 → 12/1987
SPIDEREUROPA (DS)-2000	03/1982 → 09/1985
TALENTO Autobus (290)-1.9 D (290UEHK)	03/1989 → 03/1994
TALENTO Furgonato (290)-1.9 D (290UK)	03/1989 → 03/1994
TALENTO Pianale piatto/Telaio (290)-1.9 D (290UAK, 290UTK)	03/1989 → 03/1994
TIPO (160)-1.7 D (160.AG)	01/1988 → 12/1989
UNO (146A/E)-60 Diesel 1.7	07/1986 → 08/1989
UNO (146A/E)-70 TD 1.4	10/1986 → 12/1989
LANCIA	
BETA (828_B_)-1400 (828AB2)	08/1973 → 12/1975
BETA (828_B_)-2000 (828CB1)	04/1976 → 07/1976
BETA Coupe (828BC)-2000	04/1976 → 12/1978
BETA Coupe (828BC)-2000 VX	07/1983 → 12/1984
BETA H.P.E. (828BF)-2000	05/1976 → 05/1976
BETA Spider (828BS)-2000 (828BS1)	05/1976 → 12/1978
DELTA I (831AB0)-1.6 GT	11/1982 → 04/1986
DELTA I (831AB0)-1.6 HF Turbo	10/1983 → 12/1986
PRISMA (831AB0)-1.6	12/1982 → 04/1986
PRISMA (831AB0)-1.9 Diesel	06/1984 → 12/1989
SEAT	
132-1.6	09/1978 → 05/1979
132-1.8	05/1973 → 12/1979
IBIZA I (021A)-1.7 D	01/1985 → 05/1993
MALAGA (023A)-1.7 D	05/1985 → 12/1993
RITMO (138)-1.7 D	09/1980 → 05/1982
RONDA (022A)-1.7 Diesel	01/1985 → 12/1986

063321017010 MAN352 65A 12V

ALFA ROMEO	
145 (930)-1.9 TD	10/1994 → 02/1999
146 (930)-1.9 TD	12/1994 → 02/1999
155 (167)-1.9 TD (167.A3)	04/1993 → 12/1997

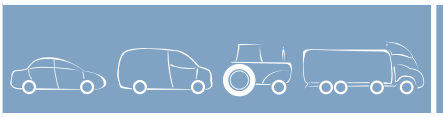


063321017010 MAN352 65A 12V

ALFA ROMEO	
33 (907A)-1.8 TD (907A5)	07/1990 → 09/1994
FERRARI	
512 BB-4.9	08/1976 → 05/1979
F40-3.0	02/1988 → 06/1992
FIAT	
131-1.4 Super Mirafiori	04/1981 → 12/1981
131-1.6 (S)	01/1981 → 09/1981
131-1.6 Super	01/1981 → 12/1981
131-1.6 Super Mirafiori (A)	01/1981 → 12/1981
131 SW/Panorama-1.4 Mirafiori	11/1981 → 12/1981
131 SW/Panorama-1.6 Super	01/1981 → 12/1981
131 SW/Panorama-2.0 Super	01/1981 → 12/1981
ARGENTA (132A)-1600	06/1981 → 12/1982
COUPE (FA/175)-2.0 16V	01/1994 → 08/1996
COUPE (FA/175)-2.0 16V Turbo	01/1994 → 08/1996
CROMA (154)-1900 Turbo D i.d.	11/1992 → 12/1996
CROMA (154)-1900 Turbo D i.d. (154.LL, 154.PL)	05/1989 → 10/1992
CROMA (154)-2000 CHT (154.AC)	12/1985 → 02/1989
CROMA (154)-2000 i.e. (154.AD)	03/1987 → 12/1990
REGATA (138)-65 Diesel 1.9	04/1984 → 07/1989
REGATA (138)-80 Turbo Diesel 1.9	05/1986 → 12/1987
REGATA Weekend-65 Diesel 1.9	04/1984 → 07/1989
REGATA Weekend-80 Turbo Diesel 1.9	05/1986 → 12/1987
RITMO II (138A)-80 Turbo Diesel 1.9	12/1985 → 12/1987
TIPO (160)-2.0 16V (160.AV)	07/1991 → 12/1993
TIPO (160)-2.0 i.e. 16V Sport (160.EF)	03/1993 → 04/1995
LANCIA	
DEDRA (835)-1.9 TDS (835EE, 835EF)	04/1989 → 10/1994
DEDRA (835)-2.0 HF Integrale (835AP)	11/1990 → 07/1994
DEDRA (835)-2.0 i.e. (835AL)	09/1989 → 10/1994
DEDRA (835)-2.0 i.e. Turbo Integrale (835AO)	06/1990 → 07/1992
DEDRA (835)-2.0 Turbo (835AQ)	11/1990 → 07/1992
DEDRA SW (835)-1.9 TDS (835EE, 835EF)	07/1994 → 10/1994
DELTA I (831AB0)-1.9 Turbo DS (831AB.021)	10/1986 → 12/1989
DELTA II (836)-2.0 16V (836AA, 836CA)	06/1993 → 12/1995
PRISMA (831AB0)-1.9 Turbo Diesel	05/1985 → 12/1989
THEMA (834)-2000 i.e.	03/1986 → 08/1988
THEMA (834)-2000 i.e. Turbo (834C)	12/1985 → 08/1988

063321019010 MAN274 65A 12V

ALFA ROMEO	
33 (905)-1.8 TD	01/1986 → 12/1989
33 Sportwagon (905A)-1.8 TD	01/1988 → 12/1989




063321019010 MAN274 65A 12V

ALFA ROMEO	
AR 8 Furgonato (280)-2.4 D	01/1982 → 08/1986
FIAT	
131-2.0 D	01/1982 → 08/1984
131-2.5 Diesel	01/1982 → 02/1984
131 SW/Panorama-2.0 D	01/1982 → 08/1984
131 SW/Panorama-2.5 Super Diesel (AF)	01/1982 → 12/1984
ARGENTA (132A)-2500 Diesel	06/1981 → 12/1983
ARGENTA (132A)-2500 Turbodiesel	07/1983 → 08/1985
CROMA (154)-2500 D	12/1985 → 12/1989
CROMA (154)-2500 TD (154.AE)	12/1985 → 12/1992
CROMA (154)-2500 TDE	12/1991 → 12/1992
DUCATO Furgonato (280)-2.5 D	01/1986 → 08/1990
DUCATO Panorama (280)-2.4 D	07/1982 → 12/1985
DUCATO Panorama (280)-2.5 D	01/1986 → 08/1990
IVECO	
DAILY I Cassone / Furgonato / Promiscuo-30-8 (10014131, 10014132, 10014137, 10014231, 10014232, 1001..)	01/1978 → 12/1989
DAILY I Cassone / Furgonato / Promiscuo-35-8 (10034131, 10034132, 10034137, 10034224, 10034231, 1003..)	01/1978 → 12/1989
DAILY I Cassone / Furgonato / Promiscuo-40-8 V	01/1983 → 06/1989
DAILY I Pianale piatto/Telaio-30-8 (10011131, 10011132, 10011231, 10011232, 10011237, 1001..)	01/1978 → 12/1989
DAILY I Pianale piatto/Telaio-35-8 (10031131, 10031132, 10031137, 10031224, 10031231, 1003..)	01/1978 → 12/1989
DAILY I Pianale piatto/Telaio-40-8	01/1983 → 06/1989
LANCIA	
THEMA (834)-2500 Turbo D (834D)	11/1984 → 09/1988
THEMA (834)-2500 Turbo DS (834AE)	06/1988 → 07/1994
THEMA SW (834)-2500 Turbo DS (834D)	03/1987 → 11/1994

063321021010 MAN354 65A 12V

ALFA ROMEO	
6 (119)-2.5 TD	01/1983 → 05/1986
75 (162B)-1.6 (162.B2B, 162.B2C)	01/1988 → 09/1989
75 (162B)-2.0 TD (162.BD, 162.BG)	05/1985 → 12/1989
90 (162)-2.4 TD (162.B5)	10/1984 → 07/1987
ALFETTA (116)-2.0 TD (116.BA)	01/1982 → 03/1983
ALFETTA (116)-2.4 TD (116.B3)	04/1983 → 12/1984
AR 6 Furgonato (280)-2.4 D	04/1985 → 02/1986
AR 6 Furgonato (280)-2.4 TD	09/1986 → 12/1989




063321021010 MAN354 65A 12V

ALFA ROMEO	
AR 6 Furgonato (280)-2.5 D	03/1986 → 12/1989
AR 8 Furgonato (280)-2.4 D	01/1984 → 08/1986
AR 8 Furgonato (280)-2.5 D	09/1986 → 12/1989
AR 8 Pianale piatto/Telaio (280)-2.5 D	09/1986 → 12/1988
GIULIETTA (116)-2.0 TD	01/1983 → 12/1985
FIAT	
131-2.0 D	07/1978 → 08/1984
131-2.5 Diesel	06/1978 → 02/1984
132-2.0 D	07/1978 → 07/1982
132-2.5 D	07/1978 → 07/1982
131 SW/Panorama-2.0 D	07/1978 → 08/1984
131 SW/Panorama-2.5 Super Diesel (AF)	03/1979 → 12/1984
ARGENTA (132A)-2500 Diesel	06/1981 → 11/1985
CAMPAGNOLA-2.4 D	06/1979 → 10/1986
DUCATO Furgonato (280)-2.4 D	01/1982 → 12/1985
DUCATO Furgonato (280)-2.5 D	01/1986 → 08/1990
DUCATO Furgonato (290)-2.5 D 4x4	07/1990 → 03/1994
DUCATO Furgonato (290)-2.5 TD	07/1990 → 03/1994
DUCATO Panorama (280)-2.4 D	07/1982 → 12/1985
DUCATO Panorama (280)-2.4 TD	01/1987 → 08/1990
DUCATO Panorama (280)-2.5 D	01/1986 → 08/1990
DUCATO Panorama (290)-2.5 D	07/1990 → 03/1994
DUCATO Panorama (290)-2.5 TD	08/1990 → 03/1994
DUCATO Pianale piatto/Telaio (280)-2.4 TD	01/1986 → 08/1990
DUCATO Pianale piatto/Telaio (280)-2.5 D	01/1986 → 08/1990
DUCATO Pianale piatto/Telaio (290)-2.5 D	07/1990 → 03/1994
DUCATO Pianale piatto/Telaio (290)-2.5 TD	07/1990 → 03/1994
PANDA (141A_)-900	10/1980 → 06/1994
PANDA (141A_)-750 (141AA)	01/1986 → 01/1995
UNO (146A/E)-1.0	06/1989 → 02/1992
UNO (146A/E)-50 1.1	01/1986 → 12/1993
IVECO	
DAILY I Cassone / Furgonato / Promiscuo-30-8 (10014131, 10014132, 10014137, 10014231, 10014232, 1001..)	01/1978 → 12/1989
DAILY I Cassone / Furgonato / Promiscuo-35-8 (10034131, 10034132, 10034137, 10034224, 10034231, 1003..)	01/1978 → 12/1989
DAILY I Cassone / Furgonato / Promiscuo-40-8 V	01/1983 → 06/1989
DAILY I Pianale piatto/Telaio-30-8 (10011131, 10011132, 10011231, 10011232, 10011237, 1001..)	01/1978 → 12/1989

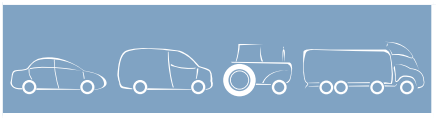


063321021010 MAN354 65A 12V	
IVECO	
DAILY I Pianale piatto/Telaio-35-8 (10031131, 10031132, 10031137, 10031224, 10031231, 1003..)	01/1978 → 12/1989
DAILY I Pianale piatto/Telaio-40-8	01/1983 → 06/1989
SEAT	
131-2.4 Diesel	06/1982 → 12/1984

063321041010 MAN284 55A 12V	
ALFA ROMEO	
AR 6 Furgonato (280)-2.5 D	03/1986 → 12/1989
FIAT	
131-2.0 D	07/1978 → 08/1984
131-2.5 Diesel	06/1978 → 02/1984
132-2.0 D	07/1978 → 07/1982
132-2.5 D	07/1978 → 07/1982
131 SW/Panorama-2.0 D	07/1978 → 08/1984
131 SW/Panorama-2.5 Super Diesel (AF)	03/1979 → 12/1984
ARGENTA (132A)-2500 Diesel	06/1981 → 11/1985
ARGENTA (132A)-2500 Turbodiesel	07/1983 → 08/1985
CAMPAGNOLA-2.4 D	06/1979 → 10/1986
DUCATO Furgonato (280)-2.4 D	01/1982 → 12/1985
DUCATO Furgonato (280)-2.5 D	01/1986 → 08/1990
DUCATO Furgonato (280)-2.5 D 4x4	03/1989 → 08/1990
DUCATO Furgonato (290)-2.5 D 4x4	07/1990 → 03/1994
DUCATO Furgonato (290)-2.5 TD	07/1990 → 03/1994
DUCATO Panorama (280)-2.4 D	07/1982 → 12/1985
DUCATO Panorama (280)-2.4 TD	01/1987 → 08/1990
DUCATO Panorama (280)-2.5 D	01/1986 → 08/1990
DUCATO Panorama (290)-2.5 D	07/1990 → 03/1994
DUCATO Panorama (290)-2.5 TD	08/1990 → 03/1994
DUCATO Pianale piatto/Telaio (280)-2.4 TD	01/1986 → 08/1990
DUCATO Pianale piatto/Telaio (280)-2.5 D	01/1986 → 08/1990
DUCATO Pianale piatto/Telaio (290)-2.5 D 4x4	07/1990 → 03/1994
DUCATO Pianale piatto/Telaio (290)-2.5 TD	07/1990 → 03/1994
SEAT	
131-2.4 Diesel	06/1982 → 12/1984

063321042010 MAN283 55A 12V	
ALFA ROMEO	
AR 6 Furgonato (280)-2.4 D	04/1985 → 02/1986
AR 6 Furgonato (280)-2.4 TD	09/1986 → 12/1989
AR 8 Furgonato (280)-2.4 D	01/1982 → 08/1986
AR 8 Furgonato (280)-2.5 D	09/1986 → 12/1989
AR 8 Pianale piatto/Telaio (280)-2.5 D	09/1986 → 12/1988

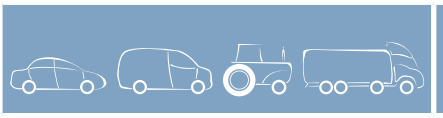


063321042010 MAN283 55A 12V	
FIAT	
DUCATO Furgonato (280)-2.4 D	01/1982 → 08/1990
DUCATO Panorama (280)-2.4 TD 4x4	01/1986 → 08/1990
DUCATO Panorama (280)-2.5 D 4x4	01/1987 → 08/1990
IVECO	
DAILY I Autobus-A 40-10 (94139111, 94139131, 94139311, 94139315, 94139317, ..)	01/1991 → 12/1996
DAILY I Autobus-A 40-12 (95819311, 95819315, 95819317, 95819331)	05/1996 → 05/1996
DAILY I Autobus-A 45-10 (94159111, 94159131, 94159211, 94159311, 94159315, ..)	01/1991 → 04/1996
DAILY I Cassone / Furgonato / Promiscuo-35-10 (12974212, 12974217, 13014111, 13014131, 13014204, 130..)	01/1989 → 08/1998
DAILY I Cassone / Furgonato / Promiscuo-35-12 (13114131, 13114204, 13114211, 13114212, 13114217, 131..)	01/1990 → 04/1996
DAILY I Cassone / Furgonato / Promiscuo-49-10 V (13054204, 13054211, 13054212, 13054215, 13054217, ..)	01/1989 → 04/1996
DAILY I Cassone / Furgonato / Promiscuo-59-12 V (13154404, 13154411, 13154412, 13154417, 13154424, ..)	05/1991 → 04/1996
DAILY I Pianale piatto/Telaio-35-10 (12971112, 12971212, 12971312, 12971317, 12976112, 129..)	01/1989 → 12/1996
DAILY I Pianale piatto/Telaio-35-12 (13110131, 13110211, 13110231, 13110311, 13110312, 131..)	01/1990 → 04/1996
DAILY I Pianale piatto/Telaio-45-10 (13031204, 13031211, 13031212, 13031224, 13031231, 130..)	01/1991 → 04/1996
DAILY I Pianale piatto/Telaio-49-10 (13050211, 13050231, 13050304, 13050311, 13050331, 130..)	01/1989 → 04/1996
DAILY I Pianale piatto/Telaio-59-12 (13150204, 13150211, 13150231, 13150311, 13150312, 131..)	05/1991 → 04/1996
DAILY I Ribaltabile-35-10 K (15030111, 15030211, 15030311, 15031111, 15031117, ..)	01/1997 → 01/1997
DAILY I Ribaltabile-35-12 K (15130311, 15130411, 15131111, 15131204, 15131211, ..)	09/1996 → 08/1998
DAILY I Ribaltabile-45-10 (13031204, 13031211, 13031212, 13031224, 13031231, 130..)	01/1992 → 04/1996




063321042010 MAN283 55A 12V	
IVECO	
DAILY I Ribaltabile-49-10 K (13056212, 13056224, 13056231, 13056237, 13056304, 1..)	01/1989 → 04/1996
DAILY I Ribaltabile-59-12 K (13156211, 13156212, 13156231, 13156311, 13156312, 1..)	05/1991 → 04/1996

063321044010 MAN286 55A 12V	
ALFA ROMEO	
AR 8 Furgonato (280)-2.4 TD	04/1985 → 12/1988
AR 8 Pianale piatto/Telaio (280)-2.4 TD	04/1985 → 12/1988
FIAT	
131-1.4 Mirafiori	11/1980 → 01/1984
131-1.4 Super Mirafiori	04/1981 → 12/1983
REGATA Weekend-80 Turbo Diesel 1.9	09/1986 → 06/1989
UNO (146A/E)-1.3 Turbo i.e.	09/1989 → 03/1991
UNO (146A/E)-1.4	07/1991 → 07/1996
IVECO	
DAILY I Cassone / Furgonato / Promiscuo-35-10 (10314204, 10314211, 10314212, 10314217, 10314411, 103..)	01/1985 → 12/1989
DAILY I Cassone / Furgonato / Promiscuo-40-10 4x4 (15214104, 15214111, 15214117, 15215111)	01/1997 → 01/1997
DAILY I Cassone / Furgonato / Promiscuo-40-10 V	01/1990 → 04/1996
DAILY I Cassone / Furgonato / Promiscuo-45-10 V (10334204, 10334211, 10334212, 10334217, 10334404)	01/1985 → 04/1996
DAILY I Cassone / Furgonato / Promiscuo-49-10 V (10354204, 10354211, 10354212, 10354217, 10354404, ..)	01/1985 → 04/1996
DAILY I Pianale piatto/Telaio-30-10	01/1998 → 05/1999
DAILY I Pianale piatto/Telaio-35-10 (10310311, 10311111, 10311112, 10311117, 10311211, 103..)	01/1985 → 05/1999
DAILY I Pianale piatto/Telaio-40-10 W 4x4	01/1997 → 01/1997
DAILY I Pianale piatto/Telaio-45-10 (10331211, 10331212, 10331217, 10331304, 10331311, 103..)	01/1985 → 04/1996
DAILY I Pianale piatto/Telaio-49-10 (10350211, 10350304, 10350311, 10350404, 10350411, 103..)	01/1985 → 12/1989




063321044010 MAN286 55A 12V	
IVECO	
DAILY I Ribaltabile-45-10 (13031204, 13031211, 13031212, 13031224, 13031231, 130..)	01/1992 → 04/1996
DAILY I Ribaltabile-49-10 K (15056204, 15056211, 15056304, 15056311)	05/1996 → 05/1999
LANCIA	
Y10 (156)-1.1 i.e. Fire (156AG)	07/1989 → 12/1995
MERCEDES-BENZ	
CLASSE E Station wagon (S210)-E 230 T (210.237)	06/1996 → 06/1997

063321062010 MAN298 65A 12V	
FIAT	
TEMPRA (159)-1.8 i.e. (159.AN)	03/1992 → 08/1996
TEMPRA (159)-2.0 i.e. (159.AP)	01/1991 → 08/1996
TEMPRA S.W. (159)-1.8 i.e. (159.AN)	03/1992 → 08/1996
TEMPRA S.W. (159)-2.0 i.e. (159.AP)	01/1992 → 03/1995
TIPO (160)-1.8 i.e. (160.AY)	01/1992 → 06/1993
TIPO (160)-2.0 i.e. (160.AT, 160.AJ)	03/1990 → 12/1992
LANCIA	
DELTA I (831AB0)-1.6 GT i.e. (831AB.010)	05/1987 → 08/1992
DELTA I (831AB0)-2.0 16V HF Evo Integrale (831AB.027)	06/1993 → 01/1994
DELTA I (831AB0)-2.0 HF Integrale (831AB.019)	11/1986 → 12/1992
PRISMA (831AB0)-2.0 i.e. 4WD	04/1986 → 12/1989

063321067010 MAN300 55A 12V	
AUTOBIANCHI	
Y10-1.0	05/1985 → 0
Y10-1.1	07/1989 → 0
FIAT	
PANDA (141A_)-1000	01/1986 → 04/1991
PANDA (141A_)-1100	05/1991 → 09/2003
PANDA (141A_)-1000 4x4	01/1986 → 12/1990
PANDA (141A_)-1000 i.e. Cat.	10/1987 → 08/1998
PANDA (141A_)-1100 4x4	04/1995 → 07/2004
PANDA (141A_)-750 (141AA)	01/1986 → 12/1991
PANDA Van (141_)-750	01/1986 → 12/1990
PANDA Van (141_)-1000	03/1989 → 06/1990
PANDA Van (141_)-1000 i.e	08/1992 → 02/2004
TIPO (160)-1.1 (160.AA)	01/1988 → 10/1991
UNO (146A/E)-45 0.9	03/1983 → 09/1992
UNO (146A/E)-45 1.0 (146A.ED)	06/1986 → 12/1993
UNO (146A/E)-45 i.e. 1.0	04/1984 → 12/1994

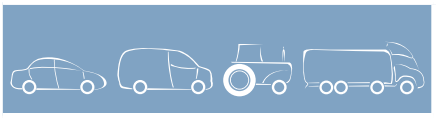


063321067010 MAN300 55A 12V	
FIAT	
UNO (146A/E)-50 1.1	01/1990 → 12/1993
UNO (146A/E)-50 i.e. 1.1	06/1992 → 12/1993
LANCIA	
Y10 (156)-1.0 Fire (156AA)	03/1985 → 02/1992
Y10 (156)-1.0 Fire 4WD	12/1986 → 12/1989
Y10 (156)-1.1 i.e (156AC)	08/1989 → 06/1992
Y10 (156)-1.1 i.e 4WD (156AC)	08/1989 → 06/1992
Y10 (156)-1.1 i.e. Fire (156AG)	07/1989 → 12/1995

063321087010 MAN370 65A 12V	
FIAT	
CROMA (154)-2000 i.e. (154.AD)	01/1990 → 08/1996
CROMA (154)-2000 i.e. Turbo (154.AM, 154. LM)	01/1991 → 08/1996
TEMPRA (159)-1.8 i.e. (159.AN)	03/1990 → 08/1996
TEMPRA (159)-2.0 i.e. (159.AP)	10/1990 → 12/1991
TEMPRA S.W. (159)-1.8 4x4	07/1992 → 06/1993
TEMPRA S.W. (159)-1.8 i.e. (159.AN)	03/1990 → 08/1996
TIPO (160)-1.7 D (160.AG)	01/1988 → 10/1995
TIPO (160)-2.0 i.e. (160.AT, 160.AJ)	03/1990 → 12/1991
LANCIA	
DEDRA (835)-1.8 i.e. (835BD, 835AD)	09/1989 → 12/1994
DEDRA (835)-2.0 i.e. (835AI)	09/1989 → 07/1992
DEDRA (835)-2.0 i.e. Turbo (835AR)	04/1991 → 07/1999
THEMA (834)-2000 16V (834FA)	08/1992 → 12/1993
THEMA (834)-2000 16V Turbo (834AC)	12/1988 → 07/1994
THEMA (834)-2000 i.e. (834BV)	01/1988 → 05/1992
THEMA (834)-2000 i.e. 16V (834AA)	05/1988 → 08/1992
THEMA (834)-2000 i.e. 16V Turbo (834AL)	04/1989 → 05/1992
THEMA SW (834)-2000 16V (834FA)	05/1992 → 07/1994
THEMA SW (834)-2000 i.e. 16V (834AA)	05/1989 → 08/1992
THEMA SW (834)-2000 i.e. 16V Turbo (834AC)	12/1988 → 03/1993
THEMA SW (834)-2000 Turbo	01/1989 → 03/1992
THEMA SW (834)-2000 Turbo 16V (834GC, 834FC)	11/1992 → 07/1994

063321112010 MAN379 55A 12V	
FIAT	
126-650	01/1983 → 06/1996
126-700	09/1987 → 06/1996
131-1.4 Mirafiori	01/1982 → 01/1984
131-1.4 Super Mirafiori	01/1982 → 12/1983
131-1.6	01/1982 → 12/1984
131-2.0 Super	01/1982 → 12/1984
131 SW/Panorama-1.4 Mirafiori	01/1982 → 01/1984

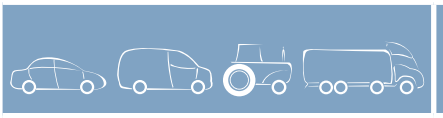


063321112010 MAN379 55A 12V	
FIAT	
131 SW/Panorama-1.6	10/1982 → 01/1984
131 SW/Panorama-2.0 Super	01/1982 → 12/1984
ARGENTA (132A)-1600	04/1981 → 12/1983
ARGENTA (132A)-1600 i.e	06/1981 → 11/1985
ARGENTA (132A)-2000 i.e.	01/1983 → 05/1983
CAMPAGNOLA-2.0	10/1982 → 10/1986
DUCATO Furgonato (290)-1.9 D	07/1990 → 03/1994
DUNA (146 B)-DS 1.7	01/1987 → 12/1990
DUNA Weekend (146 B)-DS 1.7	01/1987 → 12/1991
ELBA (146_)-1.7 D	04/1989 → 12/1996
FIORINO (147)-1.7 Diesel	01/1988 → 12/1990
FIORINO Furgonato (146 Uno)-60 1.7 D	01/1989 → 05/2000
FIORINO Pick up (146)-1.7 D	01/1989 → 12/1993
REGATA (138)-60 Diesel 1.7	09/1983 → 12/1985
REGATA Weekend-60 Diesel 1.7	01/1985 → 12/1989
RITMO II (138A)-105 1.6	01/1983 → 12/1985
TALENTO Autobus (290)-1.9 D (290UEHK)	03/1989 → 12/1993
TALENTO Furgonato (290)-1.9 D (290UK)	03/1989 → 12/1993
TALENTO Pianale piatto/Telaio (290)-1.9 D (290UAK, 290UTK)	03/1989 → 12/1993
TIPO (160)-1.7 D (160.AG)	01/1988 → 12/1989
UNO (146A/E)-1.9 D	09/1989 → 03/1994
UNO (146A/E)-60 Diesel 1.7	09/1989 → 12/1993
UNO (146A/E)-70 TD 1.4	01/1989 → 10/1990
LANCIA	
DELTA I (831AB0)-1.3 (831AB.011)	09/1979 → 08/1992
DELTA I (831AB0)-1.5 (831AB.025)	09/1979 → 12/1992

063321152010 MAN327 65A 12V	
FERRARI	
412 i-4.9	04/1985 → 12/1988
FIAT	
131-1.4 Mirafiori	01/1982 → 01/1984
131-1.6	01/1982 → 12/1984
131-2.0 Super	01/1982 → 12/1984
131 SW/Panorama-1.4 Mirafiori	01/1982 → 01/1984
131 SW/Panorama-1.6	01/1982 → 01/1984
131 SW/Panorama-2.0 Super	01/1982 → 12/1984
ARGENTA (132A)-1600	04/1981 → 12/1983
ARGENTA (132A)-2000	06/1981 → 05/1983
ARGENTA (132A)-1600 i.e	04/1981 → 12/1983
ARGENTA (132A)-2000 i.e.	01/1983 → 05/1983
CROMA (154)-1600	12/1985 → 12/1990




063321152010 MAN327 65A 12V

FIAT			
CROMA (154)-2000 CHT	03/1991	→	09/1992
CROMA (154)-2000 i.e. (154.AM)	03/1986	→	08/1996
CROMA (154)-2000 i.e. Turbo (154.AM)	12/1985	→	06/1990
REGATA (138)-100 Super 1.6	10/1983	→	12/1984
RITMO II (138A)-105 1.6	01/1983	→	12/1985
TEMPRA (159)-1.8 i.e. (159.AN)	01/1991	→	08/1996
TEMPRA S.W. (159)-1.8 i.e. (159.AN)	01/1993	→	08/1996
TIPO (160)-1.8 i.e.	01/1991	→	04/1995
TIPO (160)-1.8 i.e. (160.ED)	04/1993	→	04/1995
TIPO (160)-1.8 i.e.16V Sport	04/1990	→	06/1992
LANCIA			
DEDRA (835)-1.8 i.e. (835AT)	08/1993	→	07/1999
DEDRA SW (835)-1.8 i.e. (835FA)	07/1994	→	08/1997
DELTA II (836)-1.8 i.e. (836AE)	06/1993	→	08/1999
THEMA (834)-2000 i.e. (834B)	11/1984	→	09/1988
THEMA (834)-2000 i.e.Turbo (834CV)	07/1986	→	05/1990

063321154010 MAN344 55A 12V

FIAT			
126-700	09/1987	→	12/1990
127-1.0	04/1977	→	12/1986
127-1.0 Sport	07/1978	→	02/1982
128-1.1	01/1978	→	12/1984
128-1.3 Sport	01/1978	→	12/1984
127 Panorama-1.0	11/1978	→	12/1979
128 Coupe-1.3 (AC)	01/1978	→	12/1979
128 Coupe-1.3 Berlinetta (AC)	01/1978	→	12/1979
128 SW-1.1 (AF)	01/1978	→	10/1982
128 SW-1.3 (AF1)	01/1978	→	10/1982
DUNA (146 B)-60 1.1	01/1987	→	12/1990
DUNA (146 B)-70 1.3	01/1987	→	12/1990
DUNA Weekend (146 B)-60 1.1	01/1987	→	12/1990
DUNA Weekend (146 B)-70 1.3	01/1987	→	12/1990
ELBA (146_)-1.3	04/1991	→	02/1995
FIORINO (127)-1050	01/1980	→	12/1985
FIORINO (147)-1.3	01/1988	→	08/1993
FIORINO (147)-1.5	01/1988	→	08/1993
FIORINO Furgonato (146 Uno)-60 1.1	05/1988	→	12/1993
FIORINO Furgonato (146 Uno)-70 1.3	10/1993	→	12/1994
FIORINO Furgonato (146 Uno)-75 i.e. 1.5	05/1988	→	12/1993
FIORINO Pick up (146)-1.7 D	10/1993	→	10/1999
FIORINO Pick up (147)-1.0	10/1982	→	12/1985
REGATA (138)-70 1.3	09/1983	→	07/1986
REGATA (138)-75 1.5	01/1984	→	07/1989
REGATA (138)-85 1.5	05/1985	→	12/1987




063321154010 MAN344 55A 12V

FIAT			
REGATA (138)-85 Super 1.5	01/1984	→	04/1985
REGATA Weekend-70 1.3	05/1986	→	07/1986
REGATA Weekend-75 1.5	01/1985	→	07/1989
REGATA Weekend-85 1.5	01/1984	→	12/1987
RITMO Bertone Cabriolet-50 1.3	10/1985	→	12/1987
RITMO Bertone Cabriolet-85 1.5	10/1982	→	12/1985
RITMO I (138A)-60 1.0	09/1978	→	09/1982
RITMO I (138A)-65 1.3	01/1978	→	09/1982
RITMO I (138A)-70 1.3	11/1983	→	08/1985
RITMO I (138A)-75 1.3	01/1981	→	09/1982
RITMO I (138A)-75 1.5	01/1978	→	10/1982
RITMO I (138A)-85 1.5	01/1981	→	09/1982
RITMO II (138A)-60 1.1	10/1982	→	12/1987
RITMO II (138A)-70 1.3	01/1983	→	04/1985
RITMO II (138A)-75 1.5	09/1985	→	12/1988
RITMO II (138A)-85 1.5	01/1983	→	12/1987
TEMPRA (159)-1.4 i.e. (159.AC)	03/1991	→	08/1996
TEMPRA (159)-1.6	03/1990	→	04/1993
TEMPRA (159)-1.6 i.e. (159.AE)	06/1990	→	08/1996
TEMPRA S.W. (159)-1.4 i.e. (159.AC)	03/1991	→	08/1996
TEMPRA S.W. (159)-1.6 i.e. (159.AE)	10/1990	→	08/1996
TIPO (160)-1.4 (160.AC)	07/1987	→	12/1989
TIPO (160)-1.4 i.e.	01/1990	→	03/1993
TIPO (160)-1.6 (160.AE)	01/1988	→	10/1991
UNO (146A/E)-55 1.1	01/1983	→	08/1989
UNO (146A/E)-60 1.1 (146A.EG)	05/1985	→	12/1992
UNO (146A/E)-70 1.3	01/1983	→	08/1989
UNO (146A/E)-70 i.e. 1.4	09/1989	→	12/1993
UNO (146A/E)-75 i.e. 1.5	01/1989	→	12/1993
X 1/9 (128 AS)-1.5 Five Speed	06/1985	→	12/1989
FORD			
CAPRI II (GECP)-1.3	01/1976	→	08/1977
LANCIA			
DELTA I (831AB0)-1.1 (831AB.015)	01/1986	→	12/1990
DELTA I (831AB0)-1.3 (831AB.011)	09/1982	→	08/1992
DELTA I (831AB0)-1.5 (831AB.025)	09/1982	→	06/1987
PRISMA (831AB0)-1.3	01/1983	→	12/1989
PRISMA (831AB0)-1.5	01/1984	→	12/1989
VOLVO			
66-DL 1.1	08/1975	→	08/1978
66-GL 1.3	08/1975	→	08/1978
66 Station wagon-DL 1.1	10/1975	→	12/1978
66 Station wagon-GL 1.3	10/1975	→	12/1978




063321154010 MAN344 55A 12V	
ZASTAVA	
101 (1100)-1.1	06/1973 → 01/1990
063321155010 MAN320 55A 12V	
FIAT	
127-1.3 Diesel	04/1981 → 12/1986
127-1.3 Sport	12/1981 → 05/1983
127 Panorama-1.3 Diesel	06/1983 → 12/1986
RITMO I (138A)-65 1.3	07/1978 → 09/1982
TEMPRA (159)-1.6	04/1990 → 06/1993
TIPO (160)-1.4 (160.AC)	07/1987 → 12/1989
TIPO (160)-1.4 i.e. (160.AP, 160.AD, 160.EA)	05/1989 → 04/1995
TIPO (160)-1.6 (160.AE)	01/1990 → 10/1991
063321156010 MAN323 65A 12V	
FIAT	
PANDA (141A_)-900	04/1992 → 12/1996
PANDA (141A_)-750 (141AM) Cat.	01/1995 → 12/1997
TEMPRA (159)-1.6	04/1990 → 04/1993
TEMPRA (159)-1.6 i.e. (159.AE)	06/1990 → 08/1996
TEMPRA S.W. (159)-1.4 i.e. (159.AC)	04/1991 → 06/1993
TEMPRA S.W. (159)-1.6	12/1990 → 04/1993
TEMPRA S.W. (159)-1.6 i.e. (159.AE)	10/1990 → 08/1996
TIPO (160)-1.6 i.e.	02/1988 → 05/1991
LANCIA	
DEDRA (835)-1.6 16V (835EI)	01/1996 → 07/1999
DEDRA (835)-1.6 i.e. (835AA)	08/1989 → 07/1999
DEDRA SW (835)-1.6 (835EB)	10/1994 → 12/1998
DEDRA SW (835)-1.6 16V (835EI)	01/1996 → 07/1999
DELTA II (836)-1.4 i.e. (836AF, 836AH)	10/1994 → 08/1999
DELTA II (836)-1.6 i.e. (836AD)	06/1993 → 08/1999
063321157010 MAN322 65A 12V	
FIAT	
FIORINO Furgonato (146 Uno)-70 i.e. 1.4	01/1993 → 05/2001
FIORINO Furgonato (146 Uno)-75 i.e. 1.5	01/1989 → 12/1993
FIORINO Furgonato (146 Uno)-75 i.e. 1.6	10/1993 → 05/2001
FIORINO Pick up (146)-1.4	02/1998 → 12/1998
FIORINO Pick up (146)-1.6	01/1994 → 12/1995
REGATA (138)-75 1.5	04/1985 → 12/1987
REGATA (138)-75 i.e. 1.5	10/1985 → 07/1989
REGATA (138)-85 1.5	05/1985 → 12/1987
REGATA (138)-85 Super 1.5	09/1983 → 04/1985
REGATA Weekend-75 1.5	04/1985 → 07/1989
REGATA Weekend-75 1.5 i.e. Cat.	12/1986 → 04/1987
REGATA Weekend-85 1.5	01/1984 → 04/1989
RITMO I (138A)-75 i.e. 1.5	10/1985 → 05/1987
RITMO I (138A)-90 i.e. 1.6	05/1987 → 12/1987
RITMO II (138A)-75 1.5 Cat.	10/1985 → 12/1988
RITMO II (138A)-85 1.5	05/1985 → 12/1987

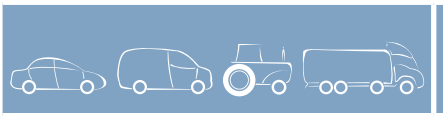


063321157010 MAN322 65A 12V	
FIAT	
RITMO II (138A)-90 1.6 i.e.	05/1987 → 12/1987
TEMPRA (159)-1.4 i.e. (159.AC, 159.AX)	03/1992 → 08/1996
TEMPRA S.W. (159)-1.4 i.e. (159.AC)	10/1992 → 08/1996
TIPO (160)-1.4 i.e.	01/1990 → 04/1995
TIPO (160)-1.6 (160.AE)	01/1988 → 12/1990
TIPO (160)-1.6 i.e.	01/1989 → 12/1993
UNO (146A/E)-1.3 Turbo i.e.	04/1985 → 03/1991
UNO (146A/E)-1.4	07/1991 → 03/1994
UNO (146A/E)-70 i.e. 1.4	05/1991 → 12/1993
INNOCENTI	
ELBA (146)-1.4 i.e. (146EN, 146EQ)	09/1994 → 12/1996
LANCIA	
DEDRA (835)-1.6 i.e. (835AA)	08/1989 → 12/1996
DEDRA (835)-1.6 LE (835EB) Cat.	01/1996 → 07/1999
DELTA I (831AB0)-1.5 (831AB.025)	09/1982 → 06/1987
PRISMA (831AB0)-1.5	01/1983 → 12/1986
063321165010 MAN382 55A 12V	
FIAT	
CINQUECENTO (170)-0.9 (170AB)	07/1991 → 12/1993
CINQUECENTO (170)-0.9 i.e. (170AC)	07/1991 → 12/1993
CINQUECENTO (170)-0.9 i.e. S (170AF, 170CF)	07/1991 → 01/1998
PANDA (141A_)-900	04/1992 → 12/1996
PANDA (141A_)-750 (141AM) Cat.	01/1995 → 12/1997
SEICENTO (187)-0.9 (187AXA, 187AXA1A)	01/1998 → 0
SEICENTO Van (187)-0.9 (187AXA)	01/1998 → 0
063321173010 MAN331 65A 12V	
AUTOBIANCHI	
Y10-1.1	07/1989 → 0
Y10-1.1 i.e. Cat.	09/1990 → 0
FIAT	
CINQUECENTO (170)-1.1 Sporting (170AH)	10/1994 → 01/1998
PALIO (178BX)-1.2	07/1997 → 08/2002
PANDA (141A_)-1000 4x4	01/1990 → 05/1991
PANDA (141A_)-1000 i.e. Cat.	01/1993 → 08/1998
PANDA (141A_)-1100 4x4	04/1995 → 08/2003
PANDA Van (141_)-1000 i.e	08/1992 → 08/2003
PUNTO (176)-1.4 GT Turbo	12/1996 → 07/1999
PUNTO (176)-85 16V 1.2	04/1997 → 09/1999
PUNTO Cabriolet (176C)-85 16V 1.2	04/1997 → 06/2000
SEICENTO Van (187)-1.1 (187CXB/C)	03/2000 → 0
SIENA (178_)-1.2	09/1998 → 0
SIENA (178_)-1.6 16V	09/1998 → 0
STRADA (178E)-1.2	06/1999 → 01/2005




063321173010 MAN331 65A 12V	
FIAT	
UNO (146A/E)-45 1.0 (146A.ED)	06/1986 → 08/1989
UNO (146A/E)-45 i.e. 1.0	10/1984 → 12/1988
LANCIA	
Y (840A)-1.1 (840AE)	11/1995 → 01/2000
Y (840A)-1.2 (840AA, 840AF1A)	03/1996 → 01/2000
Y (840A)-1.2 16V (840AD)	04/1997 → 01/2000
Y10 (156)-1.1 Avenue (156AG)	01/1995 → 12/1995
Y10 (156)-1.1 i.e (156AC)	08/1989 → 06/1992
Y10 (156)-1.1 i.e. Fire (156AG)	07/1989 → 12/1995
063321191010 MAN330 55A 12V	
ALFA ROMEO	
145 (930)-1.9 D	07/1994 → 05/1998
145 (930)-1.9 TD	10/1994 → 05/1998
146 (930)-1.9 D	05/1995 → 09/1996
146 (930)-1.9 TD	12/1994 → 05/1998
155 (167)-1.9 TD (167.A3)	04/1993 → 04/1996
FIAT	
CROMA (154)-1900 Turbo D i.d. (154.LL, 154.PL)	07/1990 → 12/1996
DUCATO Panorama (290)-1.9 TD	01/1992 → 03/1994
DUCATO Pianale piatto/Telaio (290)-1.9 TD	01/1992 → 03/1994
TEMPRA (159)-1.9 D (159.AG)	01/1992 → 08/1996
TEMPRA (159)-1.9 TD (159.CU, 159.AU, 159.AI, 159.BI)	05/1990 → 08/1996
TEMPRA S.W. (159)-1.9 D (159.AG)	01/1992 → 08/1996
TEMPRA S.W. (159)-1.9 TD (159.AI, 159.BI, 159.CU, 159.AU)	07/1991 → 02/1995
TIPO (160)-1.7 D (160.AG)	01/1992 → 10/1995
TIPO (160)-1.9 D	01/1992 → 08/1996
TIPO (160)-1.9 TD (160.EL, 160.GL, 160.AQ, 160.EI, 160.AR)	09/1990 → 04/1995
LANCIA	
DEDRA (835)-1.9 TDS (835EE, 835EF)	01/1994 → 07/1999
DEDRA SW (835)-1.9 TDS (835EE, 835EF)	07/1994 → 07/1999
DELTA II (836)-1.9 TD (836AM, 836AN)	10/1994 → 08/1999
DELTA II (836)-2.0 16V Turbo (836AS)	07/1996 → 08/1999
063321328010 MAN784 85A 12V	
FIAT	
BRAVA (182)-1.6 16V (182.BH)	10/1995 → 10/2001
BRAVO I (182)-1.6 16V (182.AH)	10/1995 → 10/2001
MAREA (185)-1.6 100 16V	09/1996 → 0
MAREA (185)-1.6 16V	10/1997 → 02/1999
MAREA Weekend (185)-1.6 100 16V	09/1996 → 0




063321328010 MAN784 85A 12V	
LANCIA	
DEDRA (835)-1.6 16V (835EI)	04/1998 → 07/1999
DEDRA SW (835)-1.6 16V (835EI)	04/1998 → 07/1999
DELTA II (836)-1.6 i.e. (836AP)	03/1996 → 08/1999
DELTA II (836)-1.6 i.e. 16V (836AO)	01/1996 → 08/1999
063321332010 MAN642 85A 12V	
FIAT	
PALIO Weekend (178DX)-1.7 TD (178DX. H1A)	04/1996 → 03/2001
PUNTO (176)-1.7 D	04/1994 → 09/1997
PUNTO (176)-1.7 TD	01/1994 → 07/1999
PUNTO (176)-60 TD 1.7	12/1996 → 07/1999
PUNTO Van (176L)-1.7 TD	04/1996 → 02/2000
STRADA (178E)-1.7 TD	02/2000 → 0
063321340010 MAN646 85A 12V	
FIAT	
PALIO (178BX)-1.6 16V	03/1998 → 10/1999
PALIO Weekend (178DX)-1.6 16V (178DX. D1A)	09/1997 → 10/1999
PUNTO (176)-90 1.6	01/1994 → 04/1997
PUNTO Cabriolet (176C)-90 1.6	04/1994 → 04/1997
SIENA (178_)-1.6 16V	09/1998 → 10/1999
063321391010 MAN789 100A 12V	
DAF	
85 CF-FA 85 CF 380	02/1998 → 12/2000
FIAT	
DUCATO Autobus (230)-1.9 TD Combinato	01/1995 → 04/2002
DUCATO Autobus (230)-1.9 TD Panorama/ Combinato	01/1995 → 04/2002
DUCATO Furgonato (230L)-1.9 TD	01/1995 → 04/2002
DUCATO Pianale piatto/Telaio (230)-1.9 TD	01/1995 → 04/2002
063321395010 MAN782 100A 12V	
ALFA ROMEO	
155 (167)-2.0 16V Turbo Q4	01/1993 → 12/1997
155 (167)-2.0 T.S. 16V (167.A2G)	03/1995 → 12/1997
164 (164)-2.0 Turbo	01/1988 → 09/1992
FIAT	
COUPE (FA/175)-2.0 16V	01/1994 → 08/1996
COUPE (FA/175)-2.0 16V Turbo	01/1994 → 08/1996
CROMA (154)-1600	12/1985 → 12/1990
CROMA (154)-2000 16V	11/1992 → 08/1996
CROMA (154)-2000 CHT	12/1985 → 09/1992
CROMA (154)-2000 i.e. (154.AM)	03/1986 → 12/1990
CROMA (154)-2000 i.e. Turbo (154.AM)	12/1985 → 08/1996
CROMA (154)-2500 TD (154.LL, 154.PL)	05/1989 → 12/1990




063321395010 MAN782 100A 12V	
FIAT	
TEMPRA (159)-1.8 i.e. (159.AN)	03/1990 → 08/1996
TEMPRA (159)-2.0 i.e. (159.AP)	10/1990 → 08/1996
TEMPRA S.W. (159)-1.8 i.e. (159.AN)	12/1990 → 08/1996
TEMPRA S.W. (159)-2.0 i.e. (159.AP)	01/1991 → 03/1995
TIPO (160)-1.6 i.e.	02/1988 → 06/1990
TIPO (160)-1.8 i.e.	01/1991 → 04/1995
TIPO (160)-1.8 i.e. (160.AY)	01/1991 → 04/1995
TIPO (160)-2.0 16V (160.AV)	07/1991 → 12/1993
TIPO (160)-2.0 i.e. (160.AT, 160.AJ)	03/1990 → 04/1995
LANCIA	
DEDRA (835)-1.8 i.e. (835BD, 835AD)	09/1989 → 07/1999
DEDRA (835)-2.0 16V (835ED)	07/1994 → 07/1999
DEDRA (835)-2.0 HF Integrale (835AP)	11/1990 → 07/1994
DEDRA (835)-2.0 i.e. (835AL)	09/1989 → 12/1990
DEDRA (835)-2.0 i.e. Turbo Integrale (835AO)	06/1990 → 10/1994
DEDRA (835)-2.0 Turbo (835AQ)	11/1990 → 07/1992
DEDRA SW (835)-2.0 16V (835ED)	07/1994 → 07/1999
DEDRA SW (835)-2.0 Integrale (835ED)	10/1994 → 07/1999
DELTA II (836)-1.8	02/1996 → 09/1999
DELTA II (836)-1.8 i.e. (836AE)	06/1993 → 08/1999
DELTA II (836)-2.0 16V (836AA, 836CA)	06/1993 → 08/1999
DELTA II (836)-2.0 16V Turbo (836AB)	06/1993 → 08/1999
THEMA (834)-2000 16V (834FA)	08/1992 → 12/1993
THEMA (834)-2000 16V Turbo (834AC)	12/1988 → 07/1994
THEMA (834)-2000 i.e (834AB)	09/1988 → 05/1992
THEMA (834)-2000 i.e.	11/1984 → 05/1992
THEMA (834)-2000 i.e. 16V (834AA)	06/1988 → 05/1992
THEMA (834)-2000 i.e. 16V Turbo (834AL)	04/1989 → 05/1992
THEMA (834)-2000 i.e.Turbo (834CV)	11/1984 → 05/1990
THEMA SW (834)-2000 16V (834FA)	05/1992 → 07/1994
THEMA SW (834)-2000 i.e. 16V (834AI)	02/1989 → 05/1992
THEMA SW (834)-2000 i.e. 16V Turbo (834AC)	12/1988 → 05/1992
THEMA SW (834)-2000 Turbo	01/1989 → 03/1992
THEMA SW (834)-2000 Turbo 16V (834GC, 834FC)	11/1992 → 07/1994
063321402010 MAN791 85A 12V	
FIAT	
BRAVA (182)-2.0	11/1998 → 08/2000
BRAVO I (182)-2.0 HGT 20V (182.AD)	10/1995 → 10/2001
COUPE (FA/175)-2.0 20V	08/1996 → 08/2000
COUPE (FA/175)-2.0 20V Turbo	08/1996 → 08/2000
MAREA (185)-2.0 150 20V	09/1996 → 12/2002

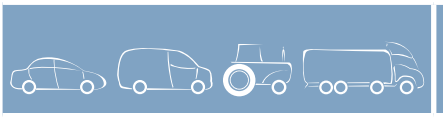


063321402010 MAN791 85A 12V	
FIAT	
MAREA (185)-2.0 155 20V	04/1999 → 01/2001
MAREA Weekend (185)-2.0 150 20V	09/1996 → 09/2002
MAREA Weekend (185)-2.0 155 20V	04/1999 → 01/2001
LANCIA	
LYBRA (839AX)-2.0 20V (839AXC11, 839AXC1A)	10/1999 → 09/2005
LYBRA SW (839BX)-2.0 20V (839BXC11, 839BXC1A)	10/1999 → 09/2005
063321409010 MAN909 55A 12V	
FIAT	
131-1.4 Mirafiori	10/1982 → 01/1984
131-1.4 Super Mirafiori	10/1982 → 12/1983
131-1.6	10/1982 → 01/1984
131-2.0 Super	10/1982 → 01/1984
132-1.6	02/1978 → 05/1981
132-2.0	02/1978 → 05/1981
131 SW/Panorama-1.4 Mirafiori	10/1982 → 01/1984
131 SW/Panorama-2.0 Super	10/1982 → 01/1984
FIORINO Furgonato (146 Uno)-1.7 D	09/1993 → 10/1999
PENNY VAN (257)-1.7 D	10/1986 → 12/1990
INNOCENTI	
ELBA (146)-1.7 D (146DI, 146EI)	08/1991 → 12/1996
063321485010 MAN1021 100A 12V	
FIAT	
FIORINO Furgonato (146 Uno)-60 1.7 D	01/1997 → 05/2000
FIORINO Furgonato (146 Uno)-65 1.7 TD	01/1997 → 09/2000
FIORINO Pick up (146)-1.7 D	01/1997 → 10/1999
FIORINO Pick up (146)-1.7 TD	01/1997 → 09/2000
063321600010 MAN640 65A 12V	
FIAT	
DOBLO (119)-1.2 (223AXA1A)	03/2001 → 0
DOBLO Cargo (223)-1.2 (223ZXA1A)	03/2001 → 0
PALIO Weekend (178DX)-1.2 (178DX.G1A)	04/1996 → 02/2001
PALIO Weekend (178DX)-1.2 (178DYA1A)	02/2001 → 0
PANDA (141A_)-1100	05/1991 → 09/2003
PANDA (141A_)-1100 4x4	02/1995 → 07/2004
PANDA (169)-1.1	09/2003 → 0
PANDA (169)-1.2	09/2003 → 0
PUNTO (176)-55 1.1	09/1993 → 09/1999
PUNTO (176)-60 1.2	01/1994 → 09/1999
PUNTO (176)-75 1.2	01/1994 → 09/1999
PUNTO (188)-1.2 60 (188.030, .050, .130, .150, .230, .250)	09/1999 → 0
PUNTO Cabriolet (176C)-60 1.2	04/1994 → 06/2000




063321600010 MAN640 65A 12V	
FIAT	
PUNTO Van (176L)-1.1	04/1996 → 02/2000
PUNTO Van (188AX)-1.2 60	02/2000 → 0
SEICENTO (187)-1.1 (187AXB, 187AXB1A)	01/1998 → 0
STRADA (178E)-1.2	06/1999 → 0
063321604010 MAN798 75A 12V	
FIAT	
DOBLO Cargo (223)-1.2 (223ZXA1A)	03/2001 → 09/2005
PALIO (178BX)-1.2	11/1999 → 09/2001
PALIO Weekend (178DX)-1.2 (178DX.G1A)	04/1996 → 09/2001
PUNTO (176)-55 1.1	05/1997 → 08/1999
PUNTO (176)-60 1.2	01/1994 → 09/1999
PUNTO (176)-75 1.2	01/1994 → 09/1999
PUNTO Cabriolet (176C)-60 1.2	04/1994 → 06/2000
PUNTO Van (176L)-1.1	05/1997 → 08/1999
SIENA (178_)-1.2	09/2001 → 12/2001
STRADA (178E)-1.2	06/1999 → 03/2005
LANCIA	
Y (840A)-1.1 (840AE)	01/1997 → 09/2003
Y (840A)-1.2 (840AA, 840AF1A)	03/1996 → 06/2000
063321605010 MAN939 65A 12V	
FIAT	
BRAVA (182)-1.2 16V 80	12/1998 → 10/2001
BRAVO I (182)-1.2 16V 80	12/1998 → 10/2001
MAREA (185)-1.2 16V	03/1999 → 09/2002
MAREA Weekend (185)-1.2 16V	03/1999 → 09/2002
PUNTO (176)-85 16V 1.2	04/1997 → 09/1999
PUNTO Cabriolet (176C)-85 16V 1.2	04/1997 → 06/2000
063321606010 MAN799 75A 12V	
FIAT	
BRAVA (182)-1.6 16V (182.BH)	10/1995 → 10/2001
BRAVO I (182)-1.6 16V (182.AH)	10/1995 → 10/2001
MAREA (185)-1.6 100 16V	09/1996 → 09/2002
MAREA Weekend (185)-1.6 100 16V	09/1996 → 09/2002
PALIO (178BX)-1.6 16V	04/1996 → 09/1999
PALIO Weekend (178DX)-1.6 16V (178DX.D1A)	04/1996 → 09/1999
SIENA (178_)-1.6 16V	09/1998 → 09/1999
LANCIA	
DEDRA (835)-1.6 16V (835EI)	01/1996 → 07/1999
DEDRA SW (835)-1.6 16V (835EI)	01/1996 → 07/1999
DELTA II (836)-1.6 i.e. 16V (836AO)	01/1996 → 08/1999
063321607010 MAN800 75A 12V	
FIAT	
BRAVA (182)-1.6 16V (182.BH)	10/1995 → 10/2001




063321607010 MAN800 75A 12V	
FIAT	
BRAVO I (182)-1.6 16V (182.AH)	10/1995 → 10/2001
MAREA (185)-1.6 100 16V	09/1996 → 0
MAREA Weekend (185)-1.6 100 16V	09/1996 → 0
LANCIA	
DEDRA (835)-1.6 16V (835EI)	02/1997 → 07/1999
DEDRA SW (835)-1.6 16V (835EI)	02/1997 → 07/1999
DELTA II (836)-1.6 i.e. (836AP)	03/1996 → 08/1999
DELTA II (836)-1.6 i.e. 16V (836AO)	01/1996 → 08/1999
063321608010 MAN801 65A 12V	
FIAT	
PALIO (178BX)-1.4	04/1996 → 0
063321615010 MAN807 65A 12V	
FIAT	
BRAVA (182)-1.9 D	10/1995 → 10/2001
BRAVO I (182)-1.9 D	10/1995 → 10/1998
PALIO (178BX)-1.0	06/1996 → 08/1997
PALIO Weekend (178DX)-1.7 TD (178DX.H1A)	04/1996 → 03/2001
PUNTO (176)-1.7 D	04/1994 → 09/1997
PUNTO (176)-1.7 TD	01/1996 → 09/1999
PUNTO (176)-60 TD 1.7	09/1996 → 04/1997
PUNTO Van (176L)-1.7 D	05/1997 → 08/1999
PUNTO Van (176L)-1.7 TD	05/1997 → 08/1999
STRADA (178E)-1.7 TD	06/1999 → 0
LANCIA	
Y (840A)-1.1 (840AE)	11/1995 → 09/2003
Y (840A)-1.2 (840AA, 840AF1A)	03/1996 → 09/2003
063321616010 MAN808 65A 12V	
FIAT	
PALIO (178BX)-1.0	04/1996 → 0
PUNTO (176)-1.7 TD	01/1994 → 12/1996
PUNTO Van (176L)-1.7 D	04/1996 → 02/2000
PUNTO Van (176L)-1.7 TD	04/1996 → 02/2000
063321617010 MAN809 75A 12V	
FIAT	
DUCATO Autobus (230)-1.9 D	04/1998 → 04/2002
DUCATO Autobus (230)-1.9 D Combinato	06/1995 → 12/2001
DUCATO Autobus (230)-1.9 TD	04/1998 → 04/2002
DUCATO Furgonato (230L)-1.9 D	04/1998 → 04/2002
DUCATO Furgonato (230L)-1.9 TD	04/1998 → 04/2002
DUCATO Pianale piatto/Telaio (230)-1.9 D	01/1995 → 04/2002
DUCATO Pianale piatto/Telaio (230)-1.9 TD	04/1998 → 04/2002




063321618010 MAN810 85A 12V	
FIAT	
BRAVA (182)-1.9 D	10/1995 → 10/2001
BRAVO I (182)-1.9 D	10/1995 → 10/2001
063321620010 MAN811 75A 12V	
FIAT	
DUCATO Autobus (230)-1.9 TD Combinato	08/1994 → 04/2002
DUCATO Autobus (230)-1.9 TD Panorama/ Combinato	03/1994 → 04/2002
DUCATO Furgonato (230L)-1.9 D	03/1994 → 04/2002
DUCATO Furgonato (230L)-1.9 TD	03/1994 → 04/2002
DUCATO Pianale piatto/Telaio (230)-1.9 D	03/1994 → 04/2002
DUCATO Pianale piatto/Telaio (230)-1.9 TD	03/1994 → 04/2002
SCUDO Combinato (220P)-1.6	02/1996 → 0
SCUDO Furgonato (220L)-1.6	02/1996 → 0
063321625010 MAN645 65A 12V	
FIAT	
PALIO (178BX)-1.4 Cat.	03/1998 → 09/2001
PUNTO (176)-90 1.6	01/1994 → 04/1997
PUNTO Cabriolet (176C)-90 1.6	04/1994 → 04/1997
SIENA (178_)-1.4	04/1996 → 0
063321715010 MAN1039 90A 12V	
FIAT	
BRAVA (182)-1.2 16V 80	10/2000 → 10/2001
BRAVO I (182)-1.2 16V 80	10/2000 → 10/2001
DOBLO (119)-1.2 (223AXA1A)	03/2001 → 0
DOBLO Cargo (223)-1.2 (223ZXA1A)	03/2001 → 0
MAREA (185)-1.2 16V	03/1999 → 0
MAREA Weekend (185)-1.2 16V	10/1998 → 0
MAREA Weekend (185)-1.6 100 16V	09/1996 → 0
PALIO (178BX)-1.2	03/2001 → 0
PUNTO (176)-85 16V 1.2	04/1997 → 09/1999
PUNTO Cabriolet (176C)-85 16V 1.2	04/1997 → 06/2000
PUNTO Van (188AX)-1.2 60	09/2000 → 0
SIENA (178_)-1.2	01/2002 → 0
LANCIA	
Y (840A)-1.2 16V (840AD)	04/1997 → 09/2003
063321729010 MAN1107 90A 12V	
ALFA ROMEO	
145 (930)-1.4 i.e. 16V T.S.	12/1996 → 01/2001
145 (930)-1.6 i.e. 16V T.S.	12/1996 → 01/2001
145 (930)-1.8 i.e. 16V	03/1998 → 01/2001
145 (930)-1.8 i.e. 16V T.S.	12/1996 → 12/1998
145 (930)-1.9 JTD	03/1999 → 01/2001
145 (930)-2.0 16V Quadrifoglio	03/1998 → 01/2001
145 (930)-2.0 16V T.S.	10/1995 → 02/1999

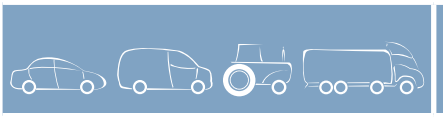


063321729010 MAN1107 90A 12V	
ALFA ROMEO	
146 (930)-1.4 i.e. 16V T.S.	11/1996 → 01/2001
146 (930)-1.6 i.e. 16V T.S.	11/1996 → 01/2001
146 (930)-1.8 i.e. 16V T.S.	11/1996 → 01/2001
146 (930)-1.9 JTD	03/1999 → 01/2001
146 (930)-2.0 16V Quadrifoglio	03/1998 → 01/2001
146 (930)-2.0 16V T.S.	10/1995 → 01/2001
147 (937)-1.6 16V T.SPARK (937AXB1A)	01/2001 → 0
147 (937)-1.9 JTD (937AXD1A)	06/2001 → 0
147 (937)-1.9 JTDM	10/2004 → 0
147 (937)-2.0 16V T.SPARK (937AXC1_)	01/2001 → 0
155 (167)-1.6 16V T.S.	05/1996 → 12/1997
155 (167)-1.7 T.S. 16V	05/1996 → 12/1997
155 (167)-2.0 T.S. 16V (167.A2G)	06/1995 → 12/1997
156 (932)-1.6 16V T.SPARK (932A4)	11/1997 → 03/2003
156 (932)-1.8 16V T.SPARK (932A3)	11/1997 → 03/2003
156 (932)-1.9 JTD (932B2)	11/1997 → 06/2000
156 (932)-2.0 16V T.SPARK (932A2)	11/1997 → 03/2002
156 (932)-2.4 JTD (932B1)	11/1997 → 04/2000
156 Sportwagon (932)-1.6 16V T.SPARK. (932A4)	05/2000 → 03/2003
156 Sportwagon (932)-1.8 16V T.SPARK (932A3)	05/2000 → 03/2003
156 Sportwagon (932)-1.9 JTD (932B2)	05/2000 → 05/2001
156 Sportwagon (932)-2.0 16V T.SPARK (932A2)	05/2000 → 03/2002
156 Sportwagon (932)-2.4 JTD (932B1)	05/2000 → 05/2006
166 (936)-2.0 T.Spark (936A3A__)	09/1998 → 06/2000
166 (936)-2.0 T.Spark (936A3B__)	10/2000 → 0
166 (936)-2.4 JTD (936A2A__)	09/1998 → 06/2000
166 (936)-2.4 JTD (936A2B__)	10/2000 → 0
GTV (916C_)-1.8 16V (916C3)	05/1998 → 0
GTV (916C_)-2.0 JTS	04/2003 → 0
GTV (916C_)-2.0 T.SPARK 16V (916.C2__, 916C2C00)	06/1995 → 0
GTV (916C_)-2.0 T.SPARK 16V (916C2C)	05/1998 → 08/2000
SPIDER (916S_)-1.8 16V (916S3)	05/1998 → 02/2003
SPIDER (916S_)-2.0 T.SPARK 16V (916S2B)	05/1998 → 08/2000
FIAT	
BARCHETTA (183)-1.8 16V	04/1995 → 0
BRAVA (182)-1.4 (182.BG)	10/1995 → 10/2001
BRAVA (182)-1.4 12 V (182.BA)	10/1995 → 10/2001
BRAVA (182)-1.8 GT 16V (182.BC)	01/1998 → 10/2001
BRAVA (182)-1.9 JTD 105	12/1998 → 08/2000
BRAVA (182)-1.9 TD 100 S (182.BF)	03/1996 → 10/2001




063321729010 MAN1107 90A 12V

FIAT	
BRAVA (182)-1.9 TD 75 S (182.BF)	03/1996 → 10/2001
BRAVO I (182)-1.4 (182.AA)	10/1995 → 10/2001
BRAVO I (182)-1.8 GT (182.AC)	01/1998 → 10/2001
BRAVO I (182)-1.9 JTD 105	12/1998 → 08/2000
BRAVO I (182)-1.9 TD 100 S (182.AF)	03/1996 → 10/2001
BRAVO I (182)-1.9 TD 75 S (182.AF)	03/1996 → 10/2001
COUPE (FA/175)-1.8 16V	03/1996 → 08/2000
DOBLO (119)-1.9 D (223AXB1A)	03/2001 → 0
DOBLO (119)-1.9 D Multijet	10/2005 → 0
DOBLO (119)-1.9 JTD	07/2003 → 0
DOBLO (119)-1.9 JTD (223AXE1A)	10/2001 → 0
DOBLO Cargo (223)-1.9 D (223ZXB1A)	03/2001 → 0
DOBLO Cargo (223)-1.9 JTD	07/2003 → 0
DOBLO Cargo (223)-1.9 JTD (223ZXE1A)	10/2001 → 0
MAREA (185)-1.4 80 12V	09/1996 → 0
MAREA (185)-1.8 115 16V	10/1996 → 0
MAREA (185)-1.9 JTD 105	04/1999 → 08/2000
MAREA (185)-1.9 JTD 110	01/2001 → 0
MAREA (185)-1.9 TD 100	09/1996 → 0
MAREA (185)-1.9 TD 75	09/1996 → 0
MAREA (185)-2.4 JTD 130	04/1999 → 0
MAREA (185)-2.4 TD 125	11/1996 → 02/1999
MAREA Weekend (185)-1.4 80 12V	09/1996 → 0
MAREA Weekend (185)-1.8 115 16V	09/1996 → 0
MAREA Weekend (185)-1.9 JTD 105	04/1999 → 0
MAREA Weekend (185)-1.9 JTD 110	01/2001 → 0
MAREA Weekend (185)-1.9 TD 100	09/1996 → 0
MAREA Weekend (185)-1.9 TD 75	09/1996 → 0
MAREA Weekend (185)-2.4 JTD 130	04/1999 → 0
MAREA Weekend (185)-2.4 TD 125	11/1996 → 02/1999
MULTIPLA (186)-1.9 JTD 105 (186AXB1A)	04/1999 → 0
MULTIPLA (186)-1.9 JTD 110	03/2001 → 07/2002
MULTIPLA (186)-1.9 JTD 115	07/2002 → 0
PALIO (178BX)-1.9 D	09/2000 → 0
PALIO Weekend (178DX)-1.9 D (178DYD1A07)	03/2001 → 0
PALIO Weekend (178DX)-1.9 JTD	09/2001 → 0
PUNTO (188)-1.8 130 HGT (188.738, .718)	09/1999 → 0
PUNTO (188)-1.9 DS 60 (188.031, .051, .231, .251)	09/1999 → 0
PUNTO (188)-1.9 JTD	10/2001 → 0
PUNTO (188)-1.9 JTD 80 (188.237, .257, .337, .357)	09/1999 → 0
PUNTO Van (188AX)-1.9 D 60	02/2000 → 0




063321729010 MAN1107 90A 12V

FIAT	
PUNTO Van (188AX)-1.9 JTD	10/2001 → 0
STILO (192)-1.9 D Multijet	09/2005 → 0
STILO (192)-1.9 JTD (192_XE1A)	10/2001 → 0
STILO Multi Wagon (192)-1.9 D Multijet	09/2005 → 0
STILO Multi Wagon (192)-1.9 JTD	01/2003 → 0
STRADA (178E)-1.9 D	12/2000 → 0
STRADA (178E)-1.9 JTD	04/2003 → 0
LANCIA	
KAPPA (838A)-2.0 20V (838AA1AA)	10/1994 → 10/2001
KAPPA (838A)-2.4 20V (838AC1AA, 838AC11A)	10/1994 → 10/2001
KAPPA (838A)-2.4 JTD (838AL1AA)	06/1998 → 10/2001
KAPPA (838A)-2.4 T.DS (838AE1AA, 838AH1AA)	08/1994 → 10/2001
KAPPA SW (838B)-2.0 20V (838BG1AA)	09/1996 → 05/2001
KAPPA SW (838B)-2.4 20V (838BC1AA, 838BC11A)	09/1996 → 10/2001
KAPPA SW (838B)-2.4 JTD (838BL1AA)	06/1998 → 05/2001
KAPPA SW (838B)-2.4 T.DS (838BH1AA)	09/1996 → 02/1998
LYBRA (839AX)-1.8 16V (839AXB1A, 839AXG1A)	07/1999 → 0
LYBRA (839AX)-1.9 JTD	05/2001 → 0
LYBRA (839AX)-1.9 JTD (839AXD1A)	07/1999 → 05/2001
LYBRA (839AX)-2.4 JTD	05/2002 → 0
LYBRA (839AX)-2.4 JTD (839AXE1A)	07/1999 → 04/2002
LYBRA SW (839BX)-1.8 16V (839BXB1A, 839BXG1A)	07/1999 → 0
LYBRA SW (839BX)-1.9 JTD	05/2001 → 0
LYBRA SW (839BX)-1.9 JTD (839BXD1A)	07/1999 → 05/2001
LYBRA SW (839BX)-2.4 JTD	05/2002 → 0
LYBRA SW (839BX)-2.4 JTD (839BXE1A)	10/1999 → 09/2000
LYBRA SW (839BX)-2.4 JTD (839BXL1A)	10/2000 → 0
Y (840A)-1.4 12V (840AC)	03/1996 → 09/2003

063321734010 MAN963 90A 12V

CITROEN	
BERLINGO-1.6	04/2008 → 0
BERLINGO (MF)-1.1 i (MFHDZ)	07/1996 → 0
BERLINGO (MF)-1.4	11/2002 → 10/2005
BERLINGO (MF)-1.4 bivalent	11/2002 → 0
BERLINGO (MF)-1.4 GNC	11/2002 → 0
BERLINGO (MF)-1.4 i (MFKFX)	07/1996 → 0
BERLINGO (MF)-1.4 i bivalent	04/2003 → 0
BERLINGO (MF)-1.6 16V	11/2002 → 0
BERLINGO (MF)-1.6 16V (MFNFU)	10/2000 → 0




063321734010 MAN963 90A 12V

CITROEN	
BERLINGO (MF)-1.9 D (MFWJZ)	07/1998 → 0
BERLINGO Furgonato (M_)-1.4 bivalent	11/2002 → 0
BERLINGO Furgonato (M_)-1.4 i (MBKFX)	07/1996 → 0
BERLINGO Furgonato (M_)-1.4 i bivalent	04/2003 → 0
BERLINGO Furgonato (M_)-1.6 16V	10/2000 → 0
BERLINGO Furgonato (M_)-1.9 D 70 (MBWJZ, MCWJZ)	04/1999 → 0
C1 (PM_, PN_)-1.4 HDi	06/2005 → 0
C5 (DC_)-1.8 16V (DC6FZB, DC6FZE)	03/2001 → 08/2004
C5 (DC_)-2.0 16V (DCRFNC, DCRFNF)	03/2001 → 08/2004
C5 (RC_)-2.0 16V (RCRFJB, RCRFJC)	09/2004 → 0
C5 Break (DE_)-1.8 16V (DE6FZB, DE6FZE)	06/2001 → 08/2004
C5 Break (DE_)-2.0 16V (DERFNF, DERFNC, RERFNC)	06/2001 → 08/2004
C5 Break (RE_)-2.0 16V (RERFJB, RERFJC)	09/2004 → 0
C8 (EA_, EB_)-2.0	07/2002 → 0
C8 (EA_, EB_)-2.2	07/2002 → 0
NEMO Furgonato (AA_)-1.4	02/2008 → 0
XSARA (N1)-1.6 16V	09/2000 → 03/2005
XSARA (N1)-1.8 VTS	09/2000 → 10/2004
XSARA Break (N2)-1.6 16V	09/2000 → 08/2005
XSARA Coupe (N0)-1.6 16V	09/2000 → 03/2005
XSARA PICASSO (N68)-1.6	12/1999 → 0
XSARA PICASSO (N68)-1.8 16V	02/2000 → 0
XSARA PICASSO (N68)-2.0 16V	01/2003 → 0
FIAT	
ULYSSE (179AX)-2.0	10/2002 → 10/2005
LANCIA	
PHEDRA (179)-2.0 (179AXA11)	09/2002 → 12/2003
PEUGEOT	
107-1.4 HDi	06/2005 → 0
206 2 volumi /Coda spiovente (2A/C)-1.1	08/1998 → 07/2000
206 2 volumi /Coda spiovente (2A/C)-1.1 i	09/1998 → 10/2005
206 2 volumi /Coda spiovente (2A/C)-1.4 16V	10/2003 → 0
206 2 volumi /Coda spiovente (2A/C)-1.4 i	09/1998 → 02/2009
206 2 volumi /Coda spiovente (2A/C)-1.6 16V	12/2000 → 08/2007
206 2 volumi /Coda spiovente (2A/C)-1.6 i	09/1998 → 12/2000
206 2 volumi /Coda spiovente (2A/C)-2.0 S16	10/2000 → 0
206 2 volumi /Coda spiovente (2A/C)-2.0 S16	04/1999 → 10/2000
206 CC (2D)-1.6 16V	09/2000 → 0
206 CC (2D)-2.0 S16	09/2000 → 0
206 SW (2E/K)-1.1	07/2002 → 10/2005
206 SW (2E/K)-1.4	07/2002 → 12/2006
206 SW (2E/K)-1.4 16V	10/2003 → 0

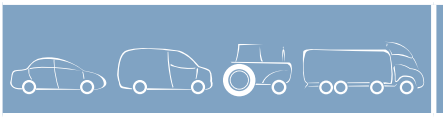


063321734010 MAN963 90A 12V

PEUGEOT	
206 SW (2E/K)-1.6 16V	07/2002 → 12/2006
307 (3A/C)-2.0 16V	08/2000 → 0
307 Break (3E)-2.0	03/2002 → 0
307 CC (3B)-2.0 16V	10/2003 → 05/2005
307 SW (3H)-2.0 16V	03/2002 → 0
406 (8B)-1.8 16V	10/2000 → 05/2004
406 (8B)-2.0 16V	08/2000 → 05/2004
406 (8B)-2.2	07/2000 → 05/2004
406 Break (8E/F)-1.8 16V	10/2000 → 06/2004
406 Break (8E/F)-2.0 16V	10/2000 → 06/2004
406 Break (8E/F)-2.2	07/2000 → 06/2004
406 Coupe (8C)-2.0 16V	10/2000 → 12/2004
406 Coupe (8C)-2.2	03/2002 → 12/2004
407 (6D_)-1.8	05/2004 → 0
407 (6D_)-1.8 16V	09/2005 → 0
407 (6D_)-2.2	05/2004 → 0
407 SW (6E_)-1.8	05/2004 → 0
407 SW (6E_) 1.8 16V	09/2005 →
807 (E) 2.0	06/2002 →
807 (E) 2.2	06/2002 →
BIPPER (AA_) 1.4	02/2008 →
EXPERT Furgonato (222) 1.9 D 70	12/1998 →
PARTNER Combispace (5F) 1.1	06/1996 →
PARTNER Combispace (5F) 1.4	11/2002 → 10/2006
PARTNER Combispace (5F) 1.6 16V	07/2001 → 04/2008
PARTNER Combispace (5F) 1.9 D	12/1998 →
PARTNER Furgonato (5) 1.4	11/2002 → 10/2006
PARTNER Furgonato (5) 1.4 BiFuel	04/2003 →
PARTNER Furgonato (5) 1.9 D	06/1996 →
TOYOTA	
AYGO (B10) 1.4 HDi (WNB10)	07/2005 →

063321747010 MAN1041 65A 12V

FIAT	
DOBLO (119) 1.2 (223AXA1A)	03/2001 →
DOBLO Cargo (223) 1.2 (223ZXA1A)	01/2004 →
MULTIPLA (186) 1.6 16V Bipower (186AXC1A)	07/2004 →
PUNTO (176) 55 1.1	09/1993 → 09/1999
PUNTO (176) 60 1.2	01/1994 → 09/1994
PUNTO (176) 75 1.2	01/1994 → 09/1999
PUNTO Cabriolet (176C) 60 1.2	04/1994 → 06/2000
STRADA (178E) 1.2	04/2003 →
LANCIA	
Y (840A) 1.1 (840AE)	01/1997 → 09/2003




063321753010 MAN1172 120A 12V

CASE IH	
CS 660 Tutte	05/2004 →
MXM 120 Tutte	01/2002 →
MXM 130 Tutte	01/2002 →
MXM 140 Tutte	01/2002 →
MXM 155 Tutte	01/2002 →
MXM 175 Tutte	01/2002 →
MXM 190 Tutte	01/2002 →
FORD NEW HOLLAND	
TM115 Tutte	01/1999 → 12/2002
TM120 Tutte	12/2000 → 12/2008
TM125 Tutte	01/1999 → 12/2008
TM130 Tutte	01/2002 → 01/2008
TM135 Tutte	01/1999 → 12/2008
TM140 Tutte	01/2002 → 01/2008
TM150 Tutte	01/1999 → 12/2002
TM165 Tutte	01/1999 → 12/2002
TM175 Tutte	01/2002 → 01/2008
NEW HOLLAND	
TM115 Tutte	01/1999 → 01/2002
TM120 Tutte	01/2008 →
TM125 Tutte	01/1999 → 01/2002
TM130 Tutte	01/2008 →
TM135 Tutte	01/1999 → 01/2002
TM140 Tutte	01/2008 →
TM150 Tutte	01/1999 → 01/2002
TM155 Tutte	01/2002 →
TM165 Tutte	01/1999 → 01/2002
TM175 Tutte	01/2008 →
TM190 Tutte	01/2002 →

063321760010 MAN1125 90A 12V

FIAT	
SEICENTO (187) 1.1 (187AXB, 187AXB1A)	09/2000 →

063321761010 MAN1150 75A 12V

FIAT	
PUNTO (188) 1.2 60 (188.030, .050, .130, .150, .230, .250)	09/1999 →

063321763010 MAN1171 75A 12V

FIAT	
PALIO (178BX) 1.2	07/1997 → 08/2002
PUNTO (188) 1.2 16V 80 (188.233, .235, .253, .255, .333, .353, .639, .63..)	09/1999 →
STILO (192) 1.2 16V (192_XA1B)	02/2002 → 12/2003




063321800010 MAN1104 100A 12V

ALFA ROMEO	
145 (930) 2.0 16V Quadrifoglio	03/1998 → 01/2001
145 (930) 2.0 16V T.S.	10/1995 → 02/1999
146 (930) 2.0 16V Quadrifoglio	03/1998 → 01/2001
146 (930) 2.0 16V T.S.	10/1995 → 01/2001
156 (932) 2.0 16V T.SPARK (932A2)	09/1997 → 12/2001
156 Sportwagon (932) 2.0 16V T.SPARK (932A2)	05/2000 → 03/2002
166 (936) 2.0 T.Spark (936A3A__)	09/1998 → 10/2000
166 (936) 2.0 T.Spark (936A3B__)	10/2000 →
GTV (916C_) 2.0 T.SPARK 16V (916.C2__, 916C2C00)	06/1995 →
GTV (916C_) 2.0 T.SPARK 16V (916C2C)	05/1998 → 08/2000
SPIDER (916S_) 2.0 T.SPARK 16V (916S2C00)	06/1995 → 04/2005
FIAT	
BRAVA (182) 1.8 GT 16V (182.BC)	10/1995 → 10/2001
BRAVA (182) 1.9 JTD	09/2000 → 10/2001
BRAVO I (182) 1.8 GT (182.AC)	10/1995 → 12/1998
BRAVO I (182) 1.9 JTD	09/2000 → 10/2001
COUPE (FA/175) 1.8 16V	03/1996 → 08/2000
MAREA (185) 1.8 115 16V	09/1996 →
MAREA Weekend (185) 1.8 115 16V	09/1996 →
MAREA Weekend (185) 2.0 155 20V	04/1999 → 08/2000

063321802010 MAN1102 85A 12V

ALFA ROMEO	
145 (930) 1.4 i.e. 16V T.S.	12/1996 → 01/2001
145 (930) 1.6 i.e. 16V T.S.	12/1996 → 01/2001
145 (930) 1.8 i.e. 16V	03/1998 → 01/2001
145 (930) 1.8 i.e. 16V T.S.	12/1996 → 12/1998
145 (930) 1.9 JTD	03/1999 → 01/2001
146 (930) 1.4 i.e. 16V T.S.	11/1996 → 01/2001
146 (930) 1.6 i.e. 16V T.S.	11/1996 → 01/2001
146 (930) 1.8 i.e. 16V T.S.	11/1996 → 01/2001
146 (930) 1.9 JTD	03/1999 → 01/2001
147 (937) 1.6 16V T.SPARK (937AXB1A)	01/2001 →
155 (167) 1.7 T.S. 16V	05/1996 → 12/1997
155 (167) 1.8 T.S.	01/1996 → 12/1997
156 (932) 1.6 16V T.SPARK (932A4)	11/1997 → 03/2003
156 (932) 1.8 16V T.SPARK (932A31__)	10/2000 → 03/2003
156 Sportwagon (932) 1.6 16V T.SPARK. (932A4)	09/2000 → 03/2003
156 Sportwagon (932) 1.8 16V T.SPARK (932A3)	05/2000 → 03/2003
GTV (916C_) 1.8 16V (916C3)	05/1998 →




063321802010 MAN1102 85A 12V	
ALFA ROMEO	
SPIDER (916S_) 1.8 16V (916S3)	05/1998 → 02/2003
FIAT	
BARCHETTA (183) 1.8 16V	04/1995 →
BRAVA (182) 1.8 GT 16V (182.BC)	08/1999 → 08/2001
BRAVA (182) 1.9 JTD 105	12/1998 → 08/2000
BRAVO I (182) 1.8 GT (182.AC)	11/1996 → 08/2001
BRAVO I (182) 1.9 JTD 105	12/1998 → 10/2001
COUPE (FA/175) 1.8 16V	01/1997 → 08/2000
MAREA (185) 1.8 115 16V	09/1996 →
MAREA (185) 1.9 JTD 105	04/1999 → 08/2000
MAREA (185) 2.4 TD 125	11/1996 → 02/1999
MAREA Weekend (185) 1.8 115 16V	09/1996 →
MAREA Weekend (185) 1.9 JTD 105	04/1999 →
MAREA Weekend (185) 2.4 TD 125	11/1996 → 02/1999
PUNTO (188) 1.9 JTD	10/2001 →
PUNTO (188) 1.9 JTD 80 (188.237, .257, .337, .357)	09/1999 →
PUNTO Van (188AX) 1.9 JTD	10/2001 →
LANCIA	
LYBRA (839AX) 1.9 JTD	05/2001 →
LYBRA (839AX) 1.9 JTD (839AXD1A)	07/1999 → 09/2000
LYBRA SW (839BX) 1.9 JTD (839BXD1A)	07/1999 → 09/2000

063321803010 MAN1100 100A 12V	
ALFA ROMEO	
145 (930) 1.4 i.e. 16V T.S.	12/1996 → 01/2001
145 (930) 1.6 i.e. 16V T.S.	12/1996 → 01/2001
145 (930) 1.8 i.e. 16V T.S.	12/1996 → 12/1998
146 (930) 1.4 i.e. 16V T.S.	11/1996 → 01/2001
146 (930) 1.6 i.e. 16V T.S.	11/1996 → 01/2001
146 (930) 1.8 i.e. 16V T.S.	03/1998 → 01/2001
155 (167) 1.6 16V T.S.	05/1996 → 01/1998
155 (167) 1.8 T.S.	01/1996 → 12/1997
156 (932) 1.6 16V T.SPARK (932A4)	09/1997 → 09/2005
156 (932) 1.8 16V T.SPARK (932A3)	09/1997 → 09/2005
156 Sportwagon (932) 1.9 JTD (932B2B__)	10/2000 → 05/2001
FIAT	
BARCHETTA (183) 1.8 16V	04/1995 →
BRAVA (182) 1.8 GT 16V (182.BC)	10/1995 → 10/2001
BRAVA (182) 1.9 TD 100 S (182.BF)	11/1998 → 10/1999
BRAVA (182) 1.9 TD 75 S (182.BF)	11/1998 → 10/1999
BRAVO I (182) 1.8 GT (182.AC)	10/1995 → 10/2001
BRAVO I (182) 1.9 TD 100 S (182.AF)	11/1998 → 10/1999
BRAVO I (182) 1.9 TD 75 S (182.AF)	11/1998 → 10/1999
MAREA (185) 1.8 115 16V	09/1996 →

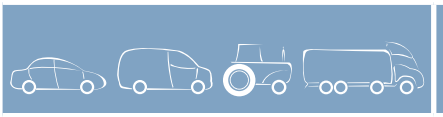


063321803010 MAN1100 100A 12V	
FIAT	
MAREA (185) 1.9 TD 100	09/1996 →
MAREA (185) 1.9 TD 75	09/1996 →
MAREA Weekend (185) 1.8 115 16V	09/1996 →
MAREA Weekend (185) 1.9 TD 100	09/1996 →
MAREA Weekend (185) 1.9 TD 75	09/1996 →
LANCIA	
DEDRA (835) 1.8 16V LE (835FG)	03/1996 → 07/1999
DEDRA (835) 1.8 GT 16V (835EH)	03/1996 → 07/1999
DEDRA SW (835) 1.8 16V LE (835FG)	03/1996 → 07/1999
DEDRA SW (835) 1.8 GT 16V (835EH)	03/1996 → 07/1999
DELTA II (836) 1.8 i.e. 16V (836AQ)	03/1996 → 08/1999
DELTA II (836) 1.8 i.e. 16V GT (836AR)	03/1996 → 08/1999

063321806010 MAN1109 85A 12V	
FIAT	
PUNTO (188) 1.9 DS 60 (188.031, .051, .231, .251)	09/1999 →

063321810010 MAN1147 85A 12V	
ALFA ROMEO	
145 (930) 1.4 i.e. 16V T.S.	12/1996 → 01/2001
145 (930) 1.6 i.e. 16V T.S.	12/1996 → 01/2001
145 (930) 1.8 i.e. 16V T.S.	12/1996 → 12/1998
146 (930) 1.4 i.e. 16V T.S.	11/1996 → 01/2001
146 (930) 1.6 i.e. 16V T.S.	11/1996 → 01/2001
146 (930) 1.8 i.e. 16V T.S.	11/1996 → 04/1998
155 (167) 1.6 16V T.S.	05/1996 → 12/1997
155 (167) 1.8 T.S.	02/1992 → 12/1997
FIAT	
BRAVA (182) 1.4 (182.BG)	10/1995 → 10/2001
BRAVA (182) 1.4 12 V (182.BA)	10/1995 → 10/2001
BRAVA (182) 1.8 GT 16V (182.BC)	10/1995 → 10/2001
BRAVO I (182) 1.4 (182.AA)	10/1995 → 10/2001
BRAVO I (182) 1.8 GT (182.AC)	10/1995 → 10/2001
COUPE (FA/175) 1.8 16V	03/1996 → 08/2000
MAREA (185) 1.4 80 12V	10/1996 → 02/1999
MAREA (185) 1.8 115 16V	10/1996 → 02/1999
MAREA (185) 2.4 TD 125	10/1996 → 02/1999
MAREA Weekend (185) 1.4 80 12V	10/1996 → 02/1999
MAREA Weekend (185) 1.8 115 16V	10/1996 → 02/1999
MAREA Weekend (185) 2.4 TD 125	10/1996 → 02/1999
LANCIA	
Y (840A) 1.4 12V (840AB)	10/1996 → 09/2003

063321813010 MAN1151 75A 12V	
ALFA ROMEO	
145 (930) 1.4 i.e. 16V T.S.	12/1996 → 01/2001




063321813010 MAN1151 75A 12V

ALFA ROMEO	
145 (930) 1.6 i.e. 16V T.S.	12/1996 → 01/2001
145 (930) 1.8 i.e. 16V T.S.	12/1996 → 12/1998
146 (930) 1.4 i.e. 16V T.S.	11/1996 → 01/2001
146 (930) 1.6 i.e. 16V T.S.	11/1996 → 01/2001
146 (930) 1.8 i.e. 16V T.S.	11/1996 → 02/1999
146 (930) 1.8 i.e. 16V T.S.	03/1998 → 01/2001
FIAT	
BRAVA (182) 1.4 (182.BG)	10/1995 → 10/2001
BRAVA (182) 1.4 12 V (182.BA)	10/1995 → 10/2001
BRAVA (182) 1.8 GT 16V (182.BC)	10/1995 → 08/2001
BRAVO I (182) 1.4 (182.AA)	10/1995 → 10/2001
BRAVO I (182) 1.8 GT (182.AC)	11/1996 → 08/2001
COUPE (FA/175) 1.8 16V	03/1996 → 08/2000
MAREA (185) 1.4 80 12V	09/1996 →
MAREA (185) 1.8 115 16V	01/2001 →
MAREA (185) 1.9 TD 100	01/2001 →
MAREA (185) 1.9 TD 75	01/2001 →
MAREA (185) 2.4 TD 125	11/1996 → 02/1999
MAREA Weekend (185) 1.4 80 12V	09/1996 →
MAREA Weekend (185) 1.8 115 16V	01/2001 →
MAREA Weekend (185) 1.9 TD 100	01/2001 →
MAREA Weekend (185) 1.9 TD 75	01/2001 →
MAREA Weekend (185) 2.4 TD 125	11/1996 → 02/1999
LANCIA	
Y (840A) 1.4 12V (840AB)	10/1996 → 08/2000

063321819010 MAN1110 90A 12V

FIAT	
DOBLO (119) 1.9 JTD	07/2003 → 12/2010
DOBLO (119) 1.9 JTD (223AXE1A)	10/2001 → 01/2004
DOBLO Cargo (223) 1.9 JTD	07/2003 → 12/2010
MULTIPLA (186) 1.9 JTD 110	03/2001 → 03/2002
MULTIPLA (186) 1.9 JTD 115	07/2002 → 12/2010
PALIO Weekend (178DX) 1.9 D (178DYD1A07)	03/2001 → 09/2001
PUNTO (188) 1.9 JTD	01/2003 →
PUNTO (188) 1.9 JTD 80 (188.237, .257, .337, .357)	10/2000 → 06/2003
STILO Multi Wagon (192) 1.9 JTD	01/2003 →

063321826010 MAN1127 105A 12V

ALFA ROMEO	
147 (937) 1.9 JTD	06/2003 →
147 (937) 1.9 JTD (937AXD1A)	04/2001 →
147 (937) 1.9 JTD 16V	10/2004 →
147 (937) 1.9 JTD 16V	09/2003 → 09/2004




063321826010 MAN1127 105A 12V

ALFA ROMEO	
147 (937) 1.9 JTD 16V	07/2005 →
147 (937) 1.9 JTDM	10/2004 →
147 (937) 1.9 JTDM 16V	07/2005 →
147 (937) 1.9 JTDM 8V	07/2005 →
156 (932) 1.9 JTD (932B2)	11/1997 → 06/2000
156 Sportwagon (932) 1.9 JTD (932B2B, 932B2C)	05/2001 → 05/2006
GT 1.9 JTD	11/2003 →
GT 1.9 JTD	05/2008 →
FIAT	
BRAVA (182) 1.9 JTD 105	01/2001 → 08/2000
BRAVO I (182) 1.9 JTD	12/2000 → 10/2001
BRAVO I (182) 1.9 JTD 105	01/2001 → 10/2001
BRAVO I (182) 1.9 TD 100 S (182.AF)	12/2000 → 10/2001
DOBLO (119) 1.9 D (223AXB1A)	03/2001 →
DOBLO (119) 1.9 D Multijet	01/2006 →
DOBLO (119) 1.9 JTD	09/2005 →
DOBLO (119) 1.9 JTD (223AXE1A)	10/2001 →
DOBLO Cargo (223) 1.9 D (223ZXB1A)	01/2004 →
DOBLO Cargo (223) 1.9 JTD	09/2005 →
DOBLO Cargo (223) 1.9 JTD (223ZXE1A)	01/2006 →
IDEA 1.9 JTD	06/2007 →
MAREA (185) 1.9 JTD 105	04/1999 → 08/2000
MAREA (185) 1.9 JTD 110	01/2001 →
MAREA (185) 1.9 TD 100	01/2001 →
MAREA (185) 1.9 TD 75	01/2001 →
MAREA (185) 2.4 JTD 130	04/1999 →
MAREA Weekend (185) 1.9 JTD 105	04/1999 →
MAREA Weekend (185) 1.9 JTD 110	01/2001 →
MAREA Weekend (185) 1.9 TD 100	01/2001 →
MAREA Weekend (185) 1.9 TD 75	01/2001 →
MULTIPLA (186) 1.9 JTD 105 (186AXB1A)	04/1999 →
MULTIPLA (186) 1.9 JTD 110	03/2001 → 07/2002
MULTIPLA (186) 1.9 JTD 115	07/2002 →
PUNTO (188) 1.9 JTD	01/2003 →
PUNTO (188) 1.9 JTD	07/2003 →
PUNTO (188) 1.9 JTD 80 (188.237, .257, .337, .357)	09/1999 →
PUNTO Van (188AX) 1.9 JTD	10/2001 →
STILO (192) 1.9 D Multijet	09/2005 →
STILO (192) 1.9 JTD	01/2004 →
STILO (192) 1.9 JTD (192_XE1A)	10/2001 →
STILO Multi Wagon (192) 1.9 D Multijet	09/2005 →
STILO Multi Wagon (192) 1.9 JTD	01/2004 →




063321826010 MAN1127 105A 12V

LANCIA	
LYBRA (839AX) 1.9 JTD	05/2001 →
LYBRA (839AX) 1.9 JTD (839AXI1A)	09/2000 → 05/2001
LYBRA SW (839BX) 1.9 JTD	05/2001 →
LYBRA SW (839BX) 1.9 JTD (839BXI1A)	09/2000 → 05/2001
MUSA (350) 1.9 D Multijet	10/2007 →

063321833010 MAN1128 65A 12V

FIAT	
DOBLO (119) 1.9 D (223AXB1A)	03/2001 →
DOBLO Cargo (223) 1.9 D (223ZXB1A)	03/2001 →
PALIO (178BX) 1.9 D	09/2000 →
PALIO Weekend (178DX) 1.9 D (178DYD1A07)	03/2001 →
PALIO Weekend (178DX) 1.9 JTD	09/2001 →
STILO Multi Wagon (192) 1.8 16V	01/2003 →
STRADA (178E) 1.9 D	12/2000 →
STRADA (178E) 1.9 JTD	04/2003 →

063321836010 MAN1121 90A 12V

ALFA ROMEO	
145 (930) 2.0 16V T.S.	10/1995 → 01/2001
146 (930) 2.0 16V T.S.	10/1995 → 01/2001
156 (932) 2.0 16V T.SPARK (932A21__)	10/2000 → 03/2002
156 Sportwagon (932) 2.0 16V T.SPARK (932B21__)	10/2000 → 03/2002
166 (936) 2.0 T.Spark (936A3B__)	10/2000 →

063321839010 MAN1119 65A 12V

FIAT	
BARCHETTA (183) 1.8 16V	01/2001 →
BRAVA (182) 1.4 12 V (182.BA)	10/1995 → 08/1998
BRAVO I (182) 1.4 (182.AA)	10/1995 → 10/2001
MAREA (185) 1.4 80 12V	09/1996 →
PUNTO (188) 1.8 130 HGT (188.738, .718)	01/2001 →
LANCIA	
Y (840A) 1.4 12V (840AB)	01/2001 → 09/2003

063321854010 MAN955 120A 12V

CITROEN	
JUMPY (U6U) 1.6	10/1995 →
JUMPY Furgonato (BS_, BT_, BY_, BZ_) 1.6 i	10/1995 →
FIAT	
PALIO Weekend (178DX) 1.2 (178DX.G1A)	04/1996 → 02/2001
PALIO Weekend (178DX) 1.7 TD (178DX.H1A)	04/1996 → 03/2001
PUNTO (176) 1.7 TD	01/1994 → 09/1999
PUNTO (176) 60 TD 1.7	09/1996 → 09/1999

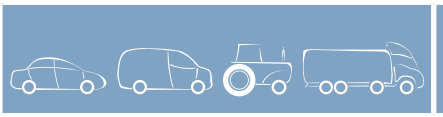


063321854010 MAN955 120A 12V

FIAT	
PUNTO Van (176L) 1.7 TD	04/1996 → 02/2000
STRADA (178E) 1.7 TD	06/1999 →

063321858010 MAN1116 120A 12V

ALFA ROMEO	
145 (930) 1.4 i.e. 16V T.S.	12/1996 → 01/2001
145 (930) 1.6 i.e. 16V T.S.	12/1996 → 01/2001
145 (930) 1.8 i.e. 16V	03/1998 → 01/2001
145 (930) 1.8 i.e. 16V T.S.	12/1996 → 12/1998
145 (930) 2.0 16V Quadrifoglio	03/1998 → 01/2001
145 (930) 2.0 16V T.S.	10/1995 → 02/1999
146 (930) 1.4 i.e. 16V T.S.	11/1996 → 01/2001
146 (930) 1.6 i.e. 16V T.S.	11/1996 → 01/2001
146 (930) 1.8 i.e. 16V T.S.	03/1998 → 01/2001
146 (930) 1.8 i.e. 16V T.S.	11/1996 → 02/1999
146 (930) 2.0 16V Quadrifoglio	03/1998 → 01/2001
146 (930) 2.0 16V T.S.	10/1995 → 01/2001
147 (937) 1.6 16V T.SPARK (937AXB1A)	10/2004 →
147 (937) 1.6 16V T.SPARK ECO (937AXA1A)	10/2004 →
155 (167) 1.6 16V T.S.	05/1996 → 01/1998
155 (167) 1.7 T.S. 16V	05/1996 → 12/1997
155 (167) 1.8 T.S.	01/1996 → 12/1997
155 (167) 2.0 T.S. 16V (167.A2G)	06/1995 → 12/1997
156 (932) 1.6 16V T.SPARK (932A4)	11/1997 → 03/2003
156 (932) 1.8 16V T.SPARK (932A3)	11/1997 → 03/2003
156 (932) 2.0 16V T.SPARK (932A2)	11/1997 → 03/2002
156 Sportwagon (932) 1.6 16V T.SPARK. (932A4)	09/2000 → 03/2003
156 Sportwagon (932) 1.8 16V T.SPARK (932A3)	05/2000 → 03/2003
156 Sportwagon (932) 2.0 16V T.SPARK (932A2)	05/2000 → 03/2002
166 (936) 2.0 T.Spark (936A3A__)	09/1998 → 06/2000
166 (936) 2.0 T.Spark (936A3B__)	10/2000 →
GTV (916C_) 1.8 16V (916C3)	05/1998 →
GTV (916C_) 2.0 JTS	04/2003 →
GTV (916C_) 2.0 T.SPARK 16V (916.C2__, 916C2C00)	06/2002 →
GTV (916C_) 2.0 T.SPARK 16V (916C2C)	05/1998 → 08/2000
SPIDER (916S_) 1.8 16V (916S3)	05/1998 → 02/2003
SPIDER (916S_) 2.0 T.SPARK 16V (916S2B)	05/1998 → 08/2000
FIAT	
DUCATO Autobus (230) 1.9 TD	04/1998 → 12/2001
DUCATO Autobus (230) 1.9 TD Combinato	01/1996 → 01/2001




063321858010 MAN1116 120A 12V

FIAT	
DUCATO Autobus (230) 1.9 TD Panorama/ Combinato	01/1996 → 01/2001
DUCATO Furgonato (230L) 1.9 TD	01/1996 → 12/2001
DUCATO Pianale piatto/Telaio (230) 1.9 TD	01/1996 → 12/2001
MULTIPLA (186) 1.9 JTD 105 (186AXB1A)	04/1999 →
PUNTO Van (188AX) 1.9 JTD	10/2001 →
STILO (192) 1.8 16V (192_XC1A)	01/2002 →
STILO Multi Wagon (192) 1.8 16V	01/2003 →
LANCIA	
KAPPA (838A) 2.0 20V (838AG1AA, 838AG11A)	07/1996 → 10/1996
KAPPA (838A) 2.4 20V (838AC1AA, 838AC11A)	10/1994 → 10/2001
KAPPA SW (838B) 2.0 20V (838BG1AA)	09/1996 → 05/2001
KAPPA SW (838B) 2.4 20V (838BC1AA, 838BC11A)	09/1996 → 10/2001
LYBRA (839AX) 1.9 JTD (839AXD1A)	07/1999 → 09/2000

063321859010 MAN1117 120A 12V

ALFA ROMEO	
145 (930) 1.9 JTD	02/1999 → 01/2001
146 (930) 1.9 JTD	02/1999 → 01/2001
147 (937) 1.9 JTD (937AXD1A)	04/2001 →
147 (937) 2.0 16V T.SPARK (937AXC1_)	01/2001 →
156 (932) 1.9 JTD (932B2)	09/1997 → 10/2000
156 (932) 2.4 JTD (932B1)	01/1998 → 10/2000
156 Sportwagon (932) 1.9 JTD (932B2)	05/2000 → 05/2001
156 Sportwagon (932) 2.4 JTD (932B1)	05/2000 → 05/2006
166 (936) 2.4 JTD (936A2A__)	09/1998 → 10/2000
166 (936) 2.4 JTD (936A2B__)	10/2000 →
FIAT	
BARCHETTA (183) 1.8 16V	04/1995 →
BRAVA (182) 1.8 GT 16V (182.BC)	08/1999 → 10/1999
BRAVA (182) 1.9 JTD 105	01/2001 → 10/2001
BRAVO I (182) 1.8 GT (182.AC)	10/1995 → 10/2001
BRAVO I (182) 1.9 JTD 105	12/1998 → 10/2001
COUPE (FA/175) 1.8 16V	01/1997 → 08/2000
DOBLO (119) 1.9 D (223AXB1A)	03/2001 →
DOBLO Cargo (223) 1.9 D (223ZXB1A)	03/2001 →
MAREA (185) 1.8 115 16V	09/1996 →
MAREA (185) 1.9 JTD 105	04/1999 → 01/2001
MAREA (185) 1.9 JTD 110	01/2001 →
MAREA (185) 2.4 JTD 130	01/2001 →
MAREA (185) 2.4 TD 125	09/1996 → 04/1999
MAREA Weekend (185) 1.8 115 16V	09/1996 →
MAREA Weekend (185) 1.9 JTD 105	04/1999 →




063321859010 MAN1117 120A 12V

FIAT	
MAREA Weekend (185) 1.9 JTD 110	01/2001 →
MAREA Weekend (185) 2.4 JTD 130	01/2001 →
MAREA Weekend (185) 2.4 TD 125	09/1996 → 04/1999
MULTIPLA (186) 1.9 JTD 110	03/2001 → 07/2002
MULTIPLA (186) 1.9 JTD 115	07/2002 →
PUNTO (188) 1.8 130 HGT (188.738, .718)	09/1999 →
PUNTO (188) 1.9 JTD	10/2001 →
PUNTO (188) 1.9 JTD 80 (188.237, .257, .337, .357)	09/1999 →
STILO (192) 1.9 JTD (192_XF1A)	02/2002 →
STRADA (178E) 1.9 D	12/2000 →
LANCIA	
DELTA II (836) 1.8 i.e. 16V GT (836AR)	03/1996 → 08/1999
KAPPA (838A) 2.0 20V (838AA1AA)	10/1994 → 10/2001
KAPPA (838A) 2.4 JTD (838AL1AA)	06/1998 → 10/2001
KAPPA (838A) 2.4 T.DS (838AE1AA, 838AH1AA)	01/1998 → 10/2001
KAPPA SW (838B) 2.4 JTD (838BL1AA)	06/1998 → 10/2001
KAPPA SW (838B) 2.4 T.DS (838BH1AA)	01/1998 → 10/2001
LYBRA (839AX) 1.8 16V (839AXB1A, 839AXG1A)	07/1999 →
LYBRA (839AX) 1.9 JTD	05/2001 →
LYBRA (839AX) 1.9 JTD (839AXI1A)	09/2000 → 05/2001
LYBRA (839AX) 2.4 JTD	05/2002 →
LYBRA (839AX) 2.4 JTD (839AXE1A)	07/1999 → 05/2002
LYBRA SW (839BX) 1.8 16V (839BXB1A, 839BXG1A)	07/1999 →
LYBRA SW (839BX) 1.9 JTD	05/2001 →
LYBRA SW (839BX) 1.9 JTD (839BXD1A)	07/1999 → 05/2001
LYBRA SW (839BX) 2.4 JTD	05/2002 →
LYBRA SW (839BX) 2.4 JTD (839BXE1A)	10/1999 → 09/2000
LYBRA SW (839BX) 2.4 JTD (839BXL1A)	09/2000 →

063321862010 MAN1162 140A 12V

FIAT	
BRAVA (182) 1.8 GT 16V (182.BC)	10/1995 → 08/2001
BRAVA (182) 1.9 JTD	09/2000 → 10/2001
BRAVA (182) 1.9 TD 100 S (182.BF)	09/1996 → 10/2001
BRAVA (182) 1.9 TD 75 S (182.BF)	09/1996 → 08/2001
BRAVO I (182) 1.8 GT (182.AC)	11/1996 → 08/2001
BRAVO I (182) 1.9 JTD	09/2000 → 10/2001
BRAVO I (182) 1.9 TD 100 S (182.AF)	09/1996 → 10/2001
BRAVO I (182) 1.9 TD 75 S (182.AF)	09/1996 → 08/2001
COUPE (FA/175) 1.8 16V	03/1996 → 08/2000
MAREA (185) 1.8 115 16V	09/1996 →




063321862010 MAN1162 140A 12V	
FIAT	
MAREA (185) 1.9 TD 100	09/1996 →
MAREA (185) 1.9 TD 75	09/1996 →
MAREA Weekend (185) 1.8 115 16V	09/1996 →
MAREA Weekend (185) 1.9 TD 100	09/1996 →
MAREA Weekend (185) 1.9 TD 75	09/1996 →
MAREA Weekend (185) 2.0 155 20V	04/1999 → 08/2000
STILO (192) 1.9 JTD (192_XE1A)	10/2001 →
STILO Multi Wagon (192) 1.9 JTD	01/2003 →
LANCIA	
THESIS (841AX) 2.4 D Multijet	04/2006 →
THESIS (841AX) 2.4 JTD (841AXD1B02)	07/2002 →
063321863010 MAN1156 90A 12V	
FIAT	
BRAVA (182) 1.2 16V 80	12/1998 → 10/2000
BRAVO I (182) 1.2 16V 80	12/1998 → 10/2000
DOBLO (119) 1.2 (223AXA1A)	03/2001 →
DOBLO Cargo (223) 1.2 (223ZXA1A)	03/2001 →
PALIO Weekend (178DX) 1.2 (178DX.G1A)	04/1996 → 02/2001
PUNTO (176) 85 16V 1.2	01/1998 → 09/1999
063321872010 MAN1154 75A 12V	
FIAT	
DOBLO (119) 1.2 (223AXA1A)	03/2001 →
063321919010 MAN1159 90A 12V	
FIAT	
STILO (192) 1.2 16V (192_XA1B)	02/2002 →
063324145010 MAN100 55A 12V	
FORD	
CAPRI III (GECP) 1.6	02/1979 → 04/1987
ESCORT '81 Express (AVA) 1.6 D	04/1984 → 02/1986
ESCORT II (ATH) 2.0 RS Trazione posteriore	06/1976 → 08/1980
ESCORT III (GAA) 1.6 D	04/1984 → 12/1985
ESCORT IV (GAF, AWF, ABFT) 1.6 XR3i	01/1986 → 08/1989
ESCORT IV Cabriolet (ALF) 1.6 XR3i	01/1986 → 07/1990
ESCORT IV Station wagon (AWF, AVF) 1.6 D	01/1986 → 01/1989
FIESTA II (FBD) 1.6 D (FBD)	04/1984 → 02/1989
FIESTA III (GFJ) 1.4	03/1989 → 05/1991
FIESTA III (GFJ) 1.4 Cat.	02/1994 → 07/1995
GRANADA (GU) 2.1 D	09/1978 → 08/1981
GRANADA Station wagon (GNU) 2.0	08/1981 → 08/1985
ORION I (AFD) 1.6 D	02/1984 → 02/1986
ORION II (AFF) 1.6 D	02/1986 → 07/1988
P 100 II 2.0	01/1988 → 05/1993
SCORPIO I (GAE, GGE) 1.8	04/1985 → 04/1987
SCORPIO I (GAE, GGE) 2.0	04/1985 → 08/1989

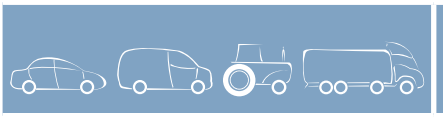


063324145010 MAN100 55A 12V	
FORD	
SIERRA (GBG, GB4) 1.8	01/1987 → 01/1993
SIERRA (GBG, GB4) 2.0	01/1987 → 12/1990
SIERRA (GBG, GB4) 2.0 i DOHC	12/1991 → 01/1993
SIERRA 2 volumi /Coda spiovente (GBC) 1.3	08/1982 → 12/1985
SIERRA 2 volumi /Coda spiovente (GBC) 1.6	08/1982 → 11/1984
SIERRA 2 volumi /Coda spiovente (GBC) 1.8	10/1984 → 11/1984
SIERRA 2 volumi /Coda spiovente (GBC) 2.0	08/1982 → 12/1986
SIERRA 2 volumi /Coda spiovente (GBC, GBG) 1.6	01/1987 → 01/1993
SIERRA 2 volumi /Coda spiovente (GBC, GBG) 1.8	01/1987 → 01/1993
SIERRA 2 volumi /Coda spiovente (GBC, GBG) 2.0	01/1987 → 12/1990
SIERRA 2 volumi /Coda spiovente (GBC, GBG) 2.0 i Cat.	01/1987 → 01/1993
SIERRA Station wagon (BNC) 1.6	08/1982 → 11/1984
SIERRA Station wagon (BNC) 1.8	10/1984 → 11/1984
SIERRA Station wagon (BNC) 2.0	08/1982 → 12/1986
SIERRA Station wagon (BNG) 1.6	01/1987 → 01/1993
SIERRA Station wagon (BNG) 1.8	01/1987 → 01/1993
SIERRA Station wagon (BNG) 2.0	01/1987 → 01/1993
TAUNUS (GBTK) 2000	08/1973 → 02/1976
TAUNUS (GBTS, GBFS, CBTS) 1.6	05/1975 → 07/1979
TAUNUS '80 (GBS, GBNS) 1.6	07/1979 → 07/1982
TAUNUS '80 (GBS, GBNS) 2.0	07/1979 → 07/1982
TAUNUS '80 Turnier (GBNS) 1.6	07/1979 → 07/1982
TAUNUS '80 Turnier (GBNS) 2.0	07/1979 → 07/1982
TAUNUS Turnier (GBNS) 1.6	05/1975 → 07/1979
TAUNUS Turnier (GBNS) 2.0	08/1976 → 07/1979
TRANSIT Autobus (72E, 73E) 2.3 D FT 100 (72E2X)	11/1971 → 09/1978
TRANSIT Autobus (T_ _) 2.0 (TBS, TCL, TCS, TEL, TES)	01/1986 → 09/1992
TRANSIT Autobus (V_ _) 1.6 (VAS, VLS, VZS)	01/1978 → 10/1985
TRANSIT Autobus (V_ _) 2.0 (VAS, VIL, VLS, VUL, VZS)	11/1977 → 10/1986
TRANSIT Furgonato (T_ _) 1.6 (TAS)	01/1986 → 09/1992
TRANSIT Furgonato (T_ _) 2.0 (TAL, TAS, TGL, TWS)	01/1986 → 09/1992
TRANSIT Furgonato (V_ _) 1.6 (WS)	01/1978 → 10/1985
TRANSIT Furgonato (V_ _) 2.0 (VHL, VVS)	11/1977 → 10/1986
TRANSIT Pianale piatto/Telaio (T_ _) 2.0 (TTE, TTL, TTS)	01/1986 → 09/1992




063324145010 MAN100 55A 12V	
IVECO	
M 115-17	12/1985 → 12/1991
M 115-17 H	01/1986 → 12/1991
Zeta 109-14	12/1985 → 12/1985
Zeta 109-14 H	12/1985 → 12/1985
Zeta 50-8	12/1985 → 12/1986
Zeta 50-8 H	12/1985 → 12/1986
Zeta 50-8 V	12/1985 → 12/1986
063324157010 MAN102 55A 12V	
AUSTIN	
MAESTRO (XC) 1.3	03/1983 → 09/1992
MAESTRO (XC) 1.3 LS	03/1983 → 08/1988
MAESTRO (XC) 2.0 EFi	10/1984 → 08/1990
METRO 1.0	10/1980 → 04/1990
METRO 1.3	10/1980 → 04/1990
METRO 1.3 Turbo	10/1983 → 04/1990
MONTEGO (XE) 2.0	04/1984 → 12/1986
MONTEGO (XE) 2.0 Turbo	04/1984 → 08/1988
MG	
MAESTRO 2.0 EFi	10/1984 → 09/1990
MAESTRO 2.0 Turbo	10/1988 → 09/1990
METRO 1300	01/1983 → 09/1990
METRO Turbo	01/1983 → 09/1990
ROVER	
MAESTRO 1.3	09/1990 → 01/1995
MAESTRO 2.0 D	09/1990 → 10/1992
MAESTRO 2.0 TD	09/1990 → 01/1995
MINI MK I 1300	01/1992 → 04/1995
MONTEGO 2.0 D Turbo	10/1988 → 12/1993
MONTEGO Estate (XE) 2.0 GTI/LXI	12/1990 → 12/1993
063324199010 MAN107 45A 12V	
AUSTIN	
METRO 1.0	01/1985 → 04/1990
METRO 1.3	01/1985 → 04/1990
METRO 1.3 Turbo	01/1985 → 04/1990
MINI MK I 1000	01/1982 → 09/1992
FORD	
CAPRI (ECJ) 1600	08/1972 → 12/1973
CAPRI (ECJ) 1700	12/1968 → 08/1972
CAPRI (ECJ) 2000	04/1969 → 08/1972
CAPRI (ECJ) 2300	04/1969 → 12/1973
CAPRI (ECJ) 2600	09/1970 → 12/1973
CAPRI (ECJ) 1600 GT	01/1969 → 10/1972
CAPRI II (GECP) 1.3	06/1976 → 08/1977
CAPRI II (GECP) 2.0	04/1976 → 12/1977




063324199010 MAN107 45A 12V	
FORD	
CAPRI II (GECP) 2.3	02/1974 → 12/1977
CAPRI III (GECP) 2.0	06/1979 → 12/1982
CAPRI III (GECP) 2.3 Super	06/1979 → 12/1985
ESCORT '81 Express (AVA) 1.1	01/1982 → 05/1983
ESCORT III (GAA) RS 1600i	05/1982 → 03/1983
FIESTA Furgonato (FVD) 1.0	09/1983 → 02/1989
FIESTA II (FBD) 1.0	09/1983 → 02/1989
FIESTA II (FBD) 1.1 (FBD)	09/1983 → 02/1989
GRANADA (GU) 2.0	08/1977 → 02/1981
GRANADA (GU) 2.3	08/1977 → 02/1981
GRANADA (GU) 2.8	08/1977 → 02/1981
GRANADA Station wagon (GNU) 2.0	08/1977 → 02/1981
GRANADA Station wagon (GNU) 2.3	08/1977 → 02/1981
GRANADA Station wagon (GNU) 2.8	08/1977 → 02/1981
SIERRA 2 volumi /Coda spiovente (GBC) 2.0	08/1982 → 10/1984
SIERRA 2 volumi /Coda spiovente (GBC) 2.3	08/1982 → 12/1986
SIERRA Station wagon (BNC) 2.0	08/1982 → 10/1984
SIERRA Station wagon (BNC) 2.3	08/1982 → 12/1986
TAUNUS (GBTS, GBFS, CBTS) 2.0	12/1975 → 07/1979
TAUNUS (GBTS, GBFS, CBTS) 2.3	12/1975 → 07/1979
TAUNUS '80 (GBS, GBNS) 2.0	07/1979 → 07/1982
TAUNUS '80 (GBS, GBNS) 2.3	08/1979 → 07/1982
TAUNUS '80 Turnier (GBNS) 2.0	08/1979 → 07/1981
TAUNUS '80 Turnier (GBNS) 2.3	08/1979 → 07/1982
TAUNUS Turnier (GBNS) 2.0	12/1975 → 07/1979
TAUNUS Turnier (GBNS) 2.3	12/1975 → 07/1979
LAND ROVER	
88/109 2.3 (LR 88 OL, LR 109 OL)	09/1983 → 12/1986
88/109 2.3 D (LR 88 DL, LR 109 DL)	09/1983 → 12/1986
88/109 Hardtop 2.3 (LR 88 OP, LR 109 OP)	09/1983 → 12/1986
88/109 Hardtop 2.3 D (LR 88 DP, LR 109 DP)	09/1983 → 12/1986
90/110 (DHMC) 2.5	01/1987 → 07/1990
90/110 (DHMC) 2.5 TD	01/1987 → 07/1990
DEFENDER Station Wagon (LD) 2.5 90,110 TDI	09/1990 → 12/1998
MINI	
MINI-MOKE 1.0	09/1988 → 12/1992
ROVER	
MINI MK I 1000	01/1992 → 12/1992
063324264010 MAN139 70A 12V	
FORD	
TRANSIT Autobus (T_ _) 2.5 D (TBS, TCL, TCS, TEL, TES)	01/1986 → 01/1989




063324264010 MAN139 70A 12V

FORD	
TRANSIT Furgonato (T_ _) 2.5 D (TAL, TAS, TGL, TWS)	01/1986 → 09/1991
TRANSIT Pianale piatto/Telaio (T_ _) 2.5 D (TTL, TTS, TUL, TUS, TTE) Cat.	01/1986 → 01/1989
TRANSIT Pianale piatto/Telaio (T_ _) 2.5 DI (TTE, TTL, TTS, TUL)	09/1988 → 12/1991

063324293010 MAN1023 70A 12V

FORD	
TRANSIT Autobus (T_ _) 2.5 D (TBS, TCL, TCS, TEL, TES)	01/1988 → 09/1992
TRANSIT Furgonato (T_ _) 2.5 D (TAL, TAS, TGL, TWS)	01/1988 → 09/1991
TRANSIT Pianale piatto/Telaio (T_ _) 2.5 D (TTL, TTS, TUL, TUS, TTE) Cat.	01/1988 → 01/1989
TRANSIT Pianale piatto/Telaio (T_ _) 2.5 DI (TTE, TTL, TTS, TUL)	09/1988 → 09/1992

063341343010 MAN826 90A 12V

FORD	
SCORPIO II (GFR, GGR) 2.9 i	01/1996 → 08/1998
SCORPIO II (GFR, GGR) 2.9 i 24V	10/1994 → 07/1998
SCORPIO II Station wagon (GNR, GGR) 2.9 i	01/1996 → 08/1998
SCORPIO II Station wagon (GNR, GGR) 2.9 i 24V	10/1994 → 07/1998

063341345010 MAN828 90A 12V

FORD	
TRANSIT Autobus (E_ _) 2.0	09/1991 → 09/1994
TRANSIT Autobus (E_ _) 2.0 (EBL, EBS, ECL, EDS, EDL, EGL, ESS, ESL, EUS)	09/1995 → 03/2000
TRANSIT Autobus (E_ _) 2.0 i (EBL, EDL, EGL, ESS, EUS)	09/1991 → 07/1994
TRANSIT Furgonato (E_ _) 2.0	09/1991 → 03/2000
TRANSIT Furgonato (E_ _) 2.0 i (EAL, EAS)	09/1991 → 06/1994
TRANSIT Pianale piatto/Telaio (E_ _) 2.0 (EME/L/S, ENE/L/S)	09/1991 → 03/2000
TRANSIT TOURNEO 2.0	11/1994 → 12/2000

063341454010 MAN1014 55A 12V

AUTOBIANCHI	
A 112 0.9	01/1976 → 12/1978
A 112 0.9 E	01/1975 → 12/1977
A 112 0.9 Junior	07/1975 → 08/1985
A 112 1.0 Abarth	03/1975 → 12/1984
A 112 1.0 E,Elite,LX	12/1977 → 08/1985
FIAT	
127.00.09	06/1973 → 05/1983

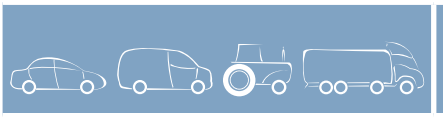


063341454010 MAN1014 55A 12V

FIAT	
FIORINO (127) 900	10/1977 → 12/1984
PANDA (141A_) 800	02/1981 → 12/1985
PANDA (141A_) 900	01/1982 → 12/1996
PANDA (141A_) 750 (141AI)	07/1990 → 07/1992
PANDA (141A_) 950 4x4	10/1984 → 09/1985
UNO (146A/E) 45 i.e. 1.0	10/1984 → 12/1988
LANCIA	
A 112 1.0 Abarth (A112B2/5)	03/1978 → 02/1984
SEAT	
FURA (025A) 0.9	01/1982 → 06/1986
IBIZA I (021A) 0.9	08/1986 → 01/1993
MARBELLA (28) 0.8	08/1986 → 12/1993
MARBELLA (28) 0.9	01/1987 → 12/1993
MARBELLA (28) 0.9 Cat.	01/1990 → 10/1998
MARBELLA Furgonato (028A) 0.8	01/1987 → 12/1993
MARBELLA Furgonato (028A) 0.9	01/1987 → 12/1993
MARBELLA Furgonato (028A) 0.9 Cat.	01/1987 → 12/1993
PANDA (141A) 0.9	09/1982 → 11/1982
TERRA (24) 0.9	02/1987 → 12/1995
TERRA (24) 0.9 Cat.	02/1992 → 12/1994
TERRA Furgonato (024A) 0.9	01/1987 → 12/1995
TERRA Furgonato (024A) 0.9 Cat.	01/1990 → 12/1995

063341658010 MAN1009 75A 12V

SMART	
CABRIO 0.6 (S1OLA1)	03/2000 → 01/2004
CABRIO 0.7	01/2003 → 01/2004
CABRIO 0.8 CDI (S1OLC1)	03/2001 → 01/2004
CITY-COUPE (MC01) 0.6	01/2001 → 01/2004
CITY-COUPE (MC01) 0.6 (S1CLA1)	01/2000 → 01/2004
FORTWO Cabrio 0.7 (450.432)	01/2004 →
FORTWO Cabrio 0.8 CDI (450.400)	01/2004 →
ROADSTER 0.7 (452.432)	04/2003 →
ROADSTER 0.7 Brabus (452.437)	12/2003 →
ROADSTER Coupe 0.7 (452.334)	04/2003 →
ROADSTER Coupe 0.7 Brabus (452.337)	12/2003 →

063341695010 MAN833 75A 12V

FORD	
ESCORT '91 Express (AVL) 1.8 D	09/1990 → 08/1994
ESCORT '95 Furgonato (AVL) 1.8 D	01/1995 →
ESCORT V Station wagon (GAL, AVL) 1.8 D	05/1991 → 12/1992
ESCORT VI (GAL) 1.8 TD	06/1993 → 12/1994
ESCORT VI Station wagon (GAL) 1.8 TD	06/1993 → 12/1994
ESCORT VII (GAL, AAL, ABL) 1.8 D	01/1995 → 12/1996
ESCORT VII (GAL, AAL, ABL) 1.8 TD	01/1997 → 10/1998
ESCORT VII (GAL, AAL, ABL) 1.8 Turbo D	12/1995 → 10/1998




063341695010 MAN833 75A 12V

FORD			
ESCORT VII Cabriolet (ALL) 1.8 TD	09/1995	→	12/1996
ESCORT VII Cabriolet (ALL) 1.8 Turbo D	10/1996	→	08/1999
ESCORT VII Station wagon (GAL, ANL) 1.8 D	01/1997	→	02/1999
ESCORT VII Station wagon (GAL, ANL) 1.8 TD	01/1997	→	02/1999
ESCORT VII Station wagon (GAL, ANL) 1.8 Turbo D	12/1995	→	02/1999
ESCORT VII Tre volumi (GAL, AFL) 1.8 D	01/1995	→	12/1996
ESCORT VII Tre volumi (GAL, AFL) 1.8 TD	01/1997	→	10/1998
ESCORT VII Tre volumi (GAL, AFL) 1.8 Turbo D	12/1995	→	02/1999
FIESTA Furgonato (F3L, F5L) 1.8 D	09/1991	→	02/1996
FIESTA III (GFJ) 1.8 TD	03/1993	→	12/1995
MONDEO I (GBP) 1.8 TD	06/1993	→	08/1996
MONDEO I Station wagon (BNP) 1.8 TD	11/1995	→	08/1996
MONDEO I Tre volumi (GBP) 1.8 TD	10/1995	→	08/1996
ORION III (GAL) 1.8 TD	09/1992	→	08/1993

063341702010 MAN1008 65A 12V

SMART			
CABRIO 0.6	03/2000	→	01/2004
CABRIO 0.8 CDI (S1OLC1)	03/2001	→	01/2004
CITY-COUPE (MC01) 0.8 CDI (S1CLC1)	11/1999	→	01/2004
FORTWO Cabrio 0.8 CDI (450.400)	01/2004	→	
FORTWO Coupe 0.8 CDI (450.300)	01/2004	→	

063341711010 MAN1142 90A 12V

FORD			
FIESTA Furgonato (J5_, J3_) 1.8 DI	09/2000	→	12/2002
FIESTA IV (JA_, JB_) 1.8 DI	04/2000	→	01/2002

063341730010 MAN938 70A 12V

FORD			
ESCORT '95 Furgonato (AVL) 1.8 Turbo D	12/1995	→	06/2001
ESCORT CLASSIC (AAL, ABL) 1.8 TD	10/1998	→	07/2000
ESCORT CLASSIC Turnier (ANL) 1.8 TD	02/1999	→	07/2000
ESCORT VII (GAL, AAL, ABL) 1.8 TD	01/1995	→	10/1998
ESCORT VII (GAL, AAL, ABL) 1.8 Turbo D	04/1996	→	10/1998
ESCORT VII Cabriolet (ALL) 1.8 TD	09/1995	→	09/1996
ESCORT VII Cabriolet (ALL) 1.8 Turbo D	10/1996	→	08/1999
ESCORT VII Station wagon (GAL, ANL) 1.8 D	01/1996	→	02/1999
ESCORT VII Station wagon (GAL, ANL) 1.8 TD	01/1995	→	02/1999
ESCORT VII Station wagon (GAL, ANL) 1.8 Turbo D	04/1996	→	02/1999
ESCORT VII Tre volumi (GAL, AFL) 1.8 TD	01/1995	→	10/1998




063341730010 MAN938 70A 12V

FORD			
ESCORT VII Tre volumi (GAL, AFL) 1.8 Turbo D	04/1996	→	02/1999
FIESTA Furgonato (J5_, J3_) 1.8 DI	09/2000	→	
FIESTA Furgonato (JV_) TD 1.8	03/2000	→	
FIESTA IV (JA_, JB_) 1.8 D	09/1995	→	04/2000

063341734010 MAN1166 75A 12V

CITROEN			
BERLINGO 1.6	04/2008	→	
BERLINGO (MF) 1.4	11/2002	→	10/2005
BERLINGO (MF) 1.4 bivalent	11/2002	→	
BERLINGO (MF) 1.4 GNC	11/2002	→	
BERLINGO (MF) 1.4 i bivalent	04/2003	→	
BERLINGO (MF) 1.6 16V (MFNFU)	11/2002	→	
BERLINGO Furgonato 1.6	04/2008	→	
BERLINGO Furgonato (M_) 1.4 bivalent	11/2002	→	
BERLINGO Furgonato (M_) 1.6 16V	11/2002	→	
C4 (LC_) 2.0 16V	11/2004	→	
C4 Coupe (LA_) 2.0 16V	11/2004	→	
C5 (DC_) 1.8 16V (DC6FZB, DC6FZE)	03/2001	→	08/2004
C5 (RC_) 1.8 16V (RC6FZB)	10/2004	→	
C5 Break (DE_) 1.8 16V (DE6FZB, DE6FZE)	06/2001	→	08/2004
C5 Break (RE_) 1.8 16V (RE6FZB)	10/2004	→	
C8 (EA_, EB_) 2.0	07/2002	→	
C8 (EA_, EB_) 2.2	07/2002	→	
NEMO Furgonato (AA_) 1.4	02/2008	→	
NEMO Station wagon 1.4	04/2009	→	
SAXO (S0, S1) 1.1 X,SX	01/2000	→	09/2003
SAXO (S0, S1) 1.4 VTS	01/2000	→	06/2003
XSARA (N1) 1.4 i	09/2000	→	03/2005
XSARA Break (N2) 1.4 i	09/2000	→	08/2005
XSARA Break (N2) 1.6 16V	09/2000	→	08/2005
XSARA Coupe (N0) 1.6 16V	09/2000	→	03/2005
XSARA PICASSO (N68) 1.6	01/2000	→	
XSARA PICASSO (N68) 1.6 16V	09/2005	→	
XSARA PICASSO (N68) 1.8 16V	06/2000	→	

FIAT			
FIORINO Cassone / Furgonato / Promiscuo 1.4	02/2008	→	
QUBO 1.4	09/2008	→	
ULYSSE (179AX) 2.0	08/2002	→	

PEUGEOT			
106 II (1) 1.0 i	01/2002	→	
106 II (1) 1.1 i	01/2002	→	
106 II (1) 1.4 i	01/2002	→	




063341734010 MAN1166 75A 12V

PEUGEOT	
106 II (1) 1.6 i	01/2002 →
106 II (1) 1.6 S16	01/2002 →
206 2 volumi /Coda spiovente (2A/C) 1.1 i	09/1998 →
206 2 volumi /Coda spiovente (2A/C) 1.4 i	09/1998 →
206 2 volumi /Coda spiovente (2A/C) 1.6 16V	12/2000 →
206 2 volumi /Coda spiovente (2A/C) 1.6 i	09/1998 → 12/2000
206 CC (2D) 1.6 16V	09/2000 →
206 SW (2E/K) 1.1	07/2002 →
206 SW (2E/K) 1.4	07/2002 →
206 SW (2E/K) 1.4 16V	10/2003 →
206 SW (2E/K) 1.6 16V	07/2002 →
206+ (T3E) 1.4 i	01/2009 →
306 Break (7E, N3, N5) 1.4	01/2002 → 04/2002
306 Break (7E, N3, N5) 1.6	01/2002 → 04/2002
306 Cabriolet (7D, N3, N5) 1.6	01/2002 → 04/2002
406 (8B) 1.8 16V	01/2002 → 05/2004
406 Break (8E/F) 1.8 16V	01/2002 → 04/2004
607 (9D, 9U) 2.0	02/2000 →
BIPPER (AA_) 1.4	02/2008 →
BIPPER Tepee 1.4	04/2008 →
PARTNER Furgonato 1.6	04/2008 →
PARTNER Tepee 1.6	04/2008 →

063341740010 MAN1163 75A 12V

CITROEN	
BERLINGO (MF) 1.1 i (MFHDZ)	07/1996 →
BERLINGO (MF) 1.4 i (MFKFX)	07/1996 → 11/2002
BERLINGO (MF) 1.6 16V (MFNFU)	10/2000 → 11/2002
BERLINGO Furgonato (M_) 1.1 i (MAHDZ, MBHDZ)	07/1996 → 11/2002
BERLINGO Furgonato (M_) 1.4 i (MBKFX)	07/1996 → 11/2002
BERLINGO Furgonato (M_) 1.6 16V	10/2000 → 11/2002
SAXO (S0, S1) 1.1 X,SX	01/2000 → 09/2003
SAXO (S0, S1) 1.4 VTS	01/2000 → 06/2003
SAXO (S0, S1) 1.6	02/2001 → 09/2003
SAXO (S0, S1) 1.6 VTS	09/2000 → 09/2003
PEUGEOT	
106 II (1) 1.0 i	01/2000 →
106 II (1) 1.1 i	01/2000 → 05/2005
106 II (1) 1.4 i	01/2000 → 05/2005
106 II (1) 1.6 i	01/2000 → 05/2005
106 II (1) 1.6 S16	01/2000 →
306 (7B, N3, N5) 1.4 SL	12/2000 → 05/2001
306 (7B, N3, N5) 1.6	12/2000 → 05/2001
306 (7B, N3, N5) 1.6 SR	01/2000 → 10/2000

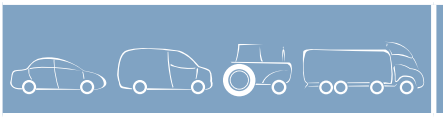


063341740010 MAN1163 75A 12V

PEUGEOT	
306 2 volumi /Coda spiovente (7A, 7C, N3, N5) 1.4	12/2000 → 05/2001
306 2 volumi /Coda spiovente (7A, 7C, N3, N5) 1.6	01/2000 → 05/2001
306 Break (7E, N3, N5) 1.4	12/2000 → 03/2002
306 Break (7E, N3, N5) 1.6	01/2000 → 03/2002
306 Cabriolet (7D, N3, N5) 1.6	01/2000 → 04/2002
PARTNER Combispace (5F) 1.1	07/1996 → 08/2002
PARTNER Combispace (5F) 1.4	07/1996 → 08/2002
PARTNER Combispace (5F) 1.6 16V	07/2001 → 08/2002
PARTNER Furgonato (5) 1.1	07/1996 → 08/2002
PARTNER Furgonato (5) 1.4	07/1996 → 08/2002
PARTNER Furgonato (5) 1.6	09/2000 → 08/2002

063341758010 MAN1143 80A 12V

FORD	
FIESTA Furgonato (J5_, J3_) 1.8 DI	09/2000 →
FIESTA Furgonato (JV_) TD 1.8	03/2000 →
FIESTA III (GFJ) 1.8 TD	03/1993 → 12/1995
FIESTA IV (JA_, JB_) 1.8 DI	04/2000 → 01/2002

063341778010 MAN1155 90A 12V

FORD	
FIESTA Furgonato (J5_, J3_) 1.8 DI	09/2000 →

063341896010 MAN1170 75A 12V

SMART	
CABRIO 0.8 CDI (S1OLC1)	03/2001 → 01/2004
CITY-COUPE (MC01) 0.6 (S1CLA1)	07/1998 → 12/2000
CITY-COUPE (MC01) 0.8 CDI (S1CLC1)	11/1999 → 01/2004
FORTWO Coupe 0.8 CDI (450.300)	01/2004 →

063358061010 MAN1097 90A 12V

FIAT	
500 1.3 D Multijet	12/2007 →
500 C 1.3 D Multijet	09/2009 →
DOBLO Cargo (223) 1.3 JTD 16V	05/2004 → 09/2005
DOBLO Cargo (223) 1.3 JTD 16V Multijet	08/2006 → 12/2010
FIORINO Cassone / Furgonato / Promiscuo 1.3 D Multijet	02/2008 →
GRANDE PUNTO Van (199) 1.3 D Multijet	04/2008 →
IDEA 1.3 JTD	01/2004 →
LINEA 1.3 D Multijet	06/2007 →
PALIO (178BX) 1.3 JTD Multijet	06/2003 →
PANDA (169) 1.3 D Multijet	09/2003 → 12/2009
PANDA (169) 1.3 D Multijet 4x4	09/2005 → 12/2009
PANDA (169) 1.3 D Multijet 4x4	09/2010 →
PANDA Van (141_) 1.3 JTD	03/2004 → 12/2009




063358061010 MAN1097 90A 12V

FIAT	
PUNTO (188) 1.3 JTD 16V	06/2003 →
PUNTO / GRANDE PUNTO (199) 1.3 D Multijet	10/2005 →
PUNTO EVO 1.3 D Multijet	10/2009 →
PUNTO Van (188AX) 1.3 JTD	07/2003 → 10/2005
QUBO 1.3 D Multijet	09/2008 →
STRADA (178E) 1.3 D Multijet	05/2006 →
LANCIA	
MUSA (350) 1.3 D Multijet	10/2004 →
YPSILON (843) 1.3 JTD	10/2003 → 09/2006
OPEL	
AGILA (H00) 1.0	08/2003 → 02/2008
AGILA (H00) 1.0 12V	09/2000 → 08/2003
AGILA (H00) 1.2 16V	09/2000 → 06/2004
AGILA (H00) 1.2 16V Twinport	07/2004 → 02/2008
AGILA (H00) 1.3 CDTI	08/2003 → 02/2008
ASTRA H 1.2	08/2005 →
ASTRA H 1.3 CDTI	08/2005 →
ASTRA H 1.4	04/2004 → 10/2004
ASTRA H 1.4 LPG	08/2009 →
ASTRA H GTC 1.2	08/2005 →
ASTRA H GTC 1.3 CDTI	04/2005 →
ASTRA H GTC 1.4	03/2005 →
ASTRA H Station wagon 1.3 CDTI	08/2005 →
ASTRA H Station wagon 1.4	08/2004 →
ASTRA H Station wagon 1.4 LPG	08/2009 →
ASTRA H Tre volumi 1.3 CDTi	02/2007 →
ASTRA H Van 1.3 CDTI	08/2005 →
COMBO Cassone / Furgonato / Promiscuo 1.3 CDTI 16V	08/2005 →
COMBO Tour 1.3 CDTI 16V	10/2004 →
CORSA C (F08, F68) 1.3 CDTI	06/2003 →
CORSA C Furgonato (F08, W5L) 1.3 CDTI 16V	08/2005 →
MERIVA 1.3 CDTI	09/2003 → 05/2010
MERIVA 1.4 16V Twinport	07/2004 → 05/2010
MERIVA 1.6	01/2006 → 03/2010
MERIVA 1.6 Turbo	09/2005 → 03/2010
TIGRA TwinTop 1.3 CDTI	06/2004 →
TIGRA TwinTop 1.4	06/2004 → 12/2009
SUZUKI	
IGNIS II 1.3 DDiS	10/2003 → 12/2007
SPLASH 1.3 CDTI	01/2008 →
SWIFT III (SG) 1.3 DDiS	08/2005 →
WAGON R+ (MM) 1.3 DDiS	09/2003 → 03/2006




063358061010 MAN1097 90A 12V

VAUXHALL	
ASTRA Mk V (H) 2 volumi /Coda spiovente 1.2	08/2005 →
ASTRA Mk V (H) 2 volumi /Coda spiovente 1.3 CDTI	01/2006 → 05/2009
ASTRA Mk V (H) 2 volumi /Coda spiovente 1.4	01/2004 → 05/2009
ASTRA Mk V (H) Sport Hatch 1.3 CDTi	01/2006 → 03/2010
ASTRA Mk V (H) Station wagon 1.2	08/2005 →
ASTRA Mk V (H) Station wagon 1.3 CDTi	06/2005 → 03/2009
ASTRA Mk V (H) Station wagon 1.4	08/2004 → 03/2009
ASTRAVAN Mk V (H) 1.3 CDTi	08/2005 → 03/2010
ASTRAVAN Mk V (H) 1.4 i	03/2005 →
COMBO Mk II (C) 1.3 CDTI 16V	03/2006 →
CORSA Mk III (C) 1.3 CDTI 16V	08/2000 → 09/2006
CORSAVAN Mk III (C) 1.3 CDTI 16V	04/2004 →
MERIVA Mk I (A) 1.3 CDTI	09/2003 → 10/2009
MERIVA Mk I (A) 1.4 16V Twinport	01/2003 → 10/2009
MERIVA Mk I (A) 1.6 i 16V Twinport	01/2006 → 10/2009
MERIVA Mk I (A) 1.6 Turbo	05/2006 → 03/2010
TIGRA TwinTop 1.3 CDTI	06/2004 → 03/2009
TIGRA TwinTop 1.4	06/2004 → 12/2009

063358062010 MAN1098 75A 12V

ALFA ROMEO	
MITO (955) 1.3 JTDM	10/2008 →
FIAT	
500 1.3 D Multijet	10/2007 →
500 C 1.3 D Multijet	09/2009 →
DOBLO (119) 1.3 D Multijet	10/2005 → 12/2010
DOBLO (119) 1.3 JTD	10/2005 → 12/2010
DOBLO Cargo (223) 1.3 D Multijet	10/2005 → 12/2010
DOBLO Cargo (223) 1.3 JTD 16V	05/2004 → 09/2005
DOBLO Cargo (223) 1.3 JTD 16V Multijet	08/2006 → 12/2010
FIORINO Cassone / Furgonato / Promiscuo 1.3 D Multijet	02/2008 →
GRANDE PUNTO Van (199) 1.3 D Multijet	04/2008 →
IDEA 1.3 D Multijet	10/2005 →
IDEA 1.3 JTD	01/2004 →
LINEA 1.3 D Multijet	06/2007 →
PALIO (178BX) 1.3 JTD Multijet	06/2003 →
PANDA (169) 1.3 D Multijet	01/2004 → 12/2009
PANDA (169) 1.3 D Multijet 4x4	09/2005 → 12/2009
PANDA (169) 1.3 D Multijet 4x4	09/2010 →
PANDA Van (141_) 1.3 JTD	03/2004 → 12/2009
PUNTO (188) 1.3 JTD 16V	06/2003 →




063358062010 MAN1098 75A 12V	
FIAT	
PUNTO / GRANDE PUNTO (199) 1.3 D Multijet	10/2005 →
PUNTO EVO 1.3 D Multijet	10/2009 →
PUNTO Van (188AX) 1.3 JTD	07/2003 → 10/2005
QUBO 1.3 D Multijet	09/2008 →
STRADA (178E) 1.3 D Multijet	05/2006 →
LANCIA	
MUSA (350) 1.3 D Multijet	09/2006 →
YPSILON (843) 1.3 D Multijet	09/2006 →
YPSILON (843) 1.3 JTD	10/2003 → 09/2006
VAUXHALL	
ASTRA Mk V (H) 2 volumi /Coda spiovente 1.3 CDTI	01/2006 → 05/2009
ASTRA Mk V (H) Sport Hatch 1.3 CDTi	01/2006 → 03/2010
ASTRA Mk V (H) Station wagon 1.3 CDTi	06/2005 → 03/2009
ASTRAVAN Mk V (H) 1.3 CDTi	08/2005 → 03/2010
COMBO Mk II (C) 1.3 CDTI 16V	03/2006 →
CORSA Mk III (C) 1.3 CDTI 16V	09/2003 → 09/2006
CORSAVAN Mk III (C) 1.3 CDTI 16V	04/2004 → 09/2006
MERIVA Mk I (A) 1.3 CDTI	09/2003 → 10/2009
MERIVA Mk I (A) 1.6 i 16V Twinport	01/2006 → 10/2009
MERIVA Mk I (A) 1.6 Turbo	05/2006 → 03/2010
TIGRA TwinTop 1.3 CDTI	06/2004 → 03/2009

063377001010 MAN7001 70A 12V	
FIAT	
DOBLO (119) 1.2 (223AXA1A)	03/2001 →
DOBLO Cargo (223) 1.2 (223ZXA1A)	03/2001 →
IDEA 1.2 16V	01/2004 →
PANDA (141A_) 1100	04/2002 → 09/2003
PANDA (169) 1.2	09/2003 → 12/2009
PANDA (169) 1.2 4x4	10/2004 → 12/2009
PANDA Van (141_) 1.2	09/2004 → 12/2009
PANDA Van (141_) 1.2 4x4	10/2004 → 12/2009
PUNTO Van (188AX) 1.2 60	04/2002 → 06/2003
SEICENTO (187) 1.1 (187AXB, 187AXB1A)	01/2001 → 12/2010
STRADA (178E) 1.2	06/1999 →
LANCIA	
YPSILON (843) 1.2	10/2003 →

063377002010 MAN7002 70A 12V	
FIAT	
PANDA (169) 1.2	09/2003 →
PUNTO (188) 1.2 16V 80 (188.233, .235, .253, .255, .333, .353, .639, .63..)	01/2000 →

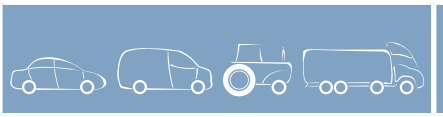


063377002010 MAN7002 70A 12V	
FIAT	
PUNTO (188) 1.2 60 (188.030, .050, .130, .150, .230, .250)	01/2001 →

063377004010 MAN7004 120A 12V	
ALFA ROMEO	
147 (937) 1.9 JTD 16V	11/2002 →
147 (937) 1.9 JTDM	10/2004 →
156 (932) 1.9 JTD (932A2B, 932A2C)	11/2001 → 09/2005
156 Sportwagon (932) 1.9 JTD (932B2B, 932B2C)	05/2001 → 05/2006
FIAT	
PUNTO / GRANDE PUNTO (199) 1.9 D Multijet	10/2005 →
STILO (192) 1.9 D Multijet	03/2006 →
STILO (192) 1.9 JTD	01/2004 →
STILO Multi Wagon (192) 1.9 D Multijet	03/2006 →
STILO Multi Wagon (192) 1.9 JTD	01/2004 →

063377005010 MAN7005 140A 12V	
ALFA ROMEO	
159 1.9 JTDM 16V	09/2005 →
159 1.9 JTDM 8V	09/2005 →
147 (937) 1.9 JTD 16V	11/2002 →
156 (932) 1.9 JTD 16V	11/2002 → 09/2005
159 Sportwagon 1.9 JTDM 16V	03/2006 →
159 Sportwagon 1.9 JTDM 8V	03/2006 →
FIAT	
BRAVO II (198) 1.6 D Multijet	03/2008 →
CROMA (194) 1.9 D Multijet	06/2005 →
PUNTO Van (188AX) 1.3 JTD	07/2003 → 10/2005
SEDICI 1.9 D Multijet	06/2006 →

063377006010 MAN7006 70A 12V	
FIAT	
PANDA (169) 1.2	09/2003 →
PANDA (169) 1.2 Bi-Power / Natural Power	01/2007 →
PANDA (169) 1.2 LPG	04/2009 →
PANDA (169) 1.4	10/2006 →
PUNTO (188) 1.2 60 (188.030, .050, .130, .150, .230, .250)	01/2003 →
PUNTO / GRANDE PUNTO (199) 1.2	10/2005 →
PUNTO / GRANDE PUNTO (199) 1.4 16V	10/2005 →
PUNTO EVO 1.2	10/2009 →
PUNTO EVO 1.4	10/2009 →
LANCIA	
MUSA (350) 1.4	09/2005 →




063377007010 MAN7007 105A 12V		
FIAT		
500 1.2	10/2007 →	
500 1.4	10/2007 →	
PUNTO (188) 1.2 60 (188.030, .050, .130, .150, .230, .250)	01/2003 →	
PUNTO / GRANDE PUNTO (199) 1.2	10/2005 →	
PUNTO / GRANDE PUNTO (199) 1.4	10/2005 →	
063377008010 MAN7008 70A 12V		
FIAT		
PALIO (178BX) 1.2	09/2001 →	
PALIO Weekend (178DX) 1.2	02/2001 →	
PANDA (169) 1.1	09/2003 →	
PANDA (169) 1.2	09/2003 →	
PUNTO (188) 1.2 16V 80 (188.233, .235, .253, .255, .333, .353, .639, .63..)	01/2000 →	
PUNTO (188) 1.2 60 (188.030, .050, .130, .150, .230, .250)	09/1999 →	
PUNTO (188) 1.2 Natural Power	09/2003 →	
PUNTO Van (188AX) 1.2 60	02/2000 →	
SIENA (178_) 1.2	09/2001 →	
STRADA (178E) 1.2	06/1999 →	
LANCIA		
Y (840A) 1.2 (840AA, 840AF1A)	03/1996 →	09/2003
Y (840A) 1.2 16V (840AD)	04/1997 →	09/2003
063377009010 MAN7009 105A 12V		
FIAT		
PALIO (178BX) 1.2	09/2001 →	
PUNTO (188) 1.2 16V 80 (188.233, .235, .253, .255, .333, .353, .639, .63..)	09/1999 →	
PUNTO (188) 1.2 60 (188.030, .050, .130, .150, .230, .250)	09/1999 →	
PUNTO Van (188AX) 1.2 60	02/2000 →	
STILO (192) 1.2 16V (192_XA1B)	02/2002 →	
063377010010 MAN7010 90A 12V		
FIAT		
IDEA 1.2 16V	01/2004 →	
IDEA 1.4 16V	01/2004 →	
PANDA (169) 1.1	09/2003 →	
PANDA (169) 1.2 4x4	10/2004 →	
PUNTO (188) 1.2 16V 80 (188.233, .235, .253, .255, .333, .353, .639, .63..)	09/1999 →	
PUNTO (188) 1.2 Natural Power	09/2003 →	
PUNTO (188) 1.4	09/2003 →	
PUNTO / GRANDE PUNTO (199) 1.4 16V	10/2005 →	
STILO (192) 1.2 16V (192_XA1B)	02/2002 →	




063377010010 MAN7010 90A 12V		
LANCIA		
MUSA (350) 1.4	10/2004 →	
YPSILON (843) 1.2	10/2003 →	
YPSILON (843) 1.4 16V	10/2003 →	
063377011010 MAN7011 70A 12V		
FIAT		
500 1.2	10/2007 →	
500 1.4	10/2007 →	
IDEA 1.4 16V	01/2004 →	
LINEA 1.4	06/2007 →	
PANDA (169) 1.1	09/2003 →	
PANDA (169) 1.2	09/2003 →	
PUNTO (188) 1.4	09/2003 →	
PUNTO / GRANDE PUNTO (199) 1.2	10/2005 →	
PUNTO / GRANDE PUNTO (199) 1.4	10/2005 →	
FORD		
KA 1.2	10/2008 →	
LANCIA		
YPSILON (843) 1.2	10/2003 →	
YPSILON (843) 1.4	02/2006 →	
YPSILON (843) 1.4 16V	10/2003 →	
063377012010 MAN7012 70A 12V		
FIAT		
IDEA 1.2 16V	01/2004 →	
LANCIA		
YPSILON (843) 1.2	10/2003 →	
063377013010 MAN7013 90A 12V		
FIAT		
IDEA 1.4 16V	01/2004 →	
PANDA (169) 1.1	09/2003 →	
PANDA (169) 1.2	09/2003 →	
PANDA (169) 1.2 4x4	10/2004 →	
PANDA (169) 1.2 Bi-Power / Natural Power	01/2007 →	
PANDA (169) 1.4	10/2006 →	
PANDA Van (141_) 1.2	09/2004 →	
LANCIA		
MUSA (350) 1.4	10/2004 →	
YPSILON (843) 1.4 16V	10/2003 →	
063377014010 MAN7014 150A 12V		
ALFA ROMEO		
159 3.2 JTS Q4	12/2005 →	
159 Sportwagon 3.2 JTS Q4	03/2006 →	
BRERA 3.2 JTS Q4	01/2006 →	
SPIDER (916S_) 3.2 V6 24V	04/2003 →	04/2005
SPIDER (939) 3.2 JTS Q4	09/2006 →	

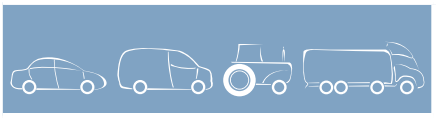


063377015010 MAN7015 150A 12V	
ALFA ROMEO	
159 2.4 JTDM	09/2005 →
159 2.4 JTDM Q4	07/2007 →
159 Sportwagon 2.4 JTDM	03/2006 →
159 Sportwagon 2.4 JTDM Q4	09/2007 →
BRERA 2.4 JTDM 20V	02/2006 →
SPIDER (939) 2.4 JTDM	04/2007 →
FIAT	
CROMA (194) 2.4 D Multijet	06/2005 →

063377016010 MAN7016 90A 12V	
FIAT	
BRAVO II (198) 1.9 D Multijet	04/2007 → 12/2008
IDEA 1.9 JTD	01/2004 →
STILO (192) 1.9 D Multijet	09/2005 →
STILO (192) 1.9 JTD (192_XE1A)	10/2001 →
LANCIA	
MUSA (350) 1.9 D Multijet	10/2004 →

063377017010 MAN7017 100A 12V	
ALFA ROMEO	
159 1.9 JTDM 8V	09/2005 →
159 Sportwagon 1.9 JTDM 8V	03/2006 →
MITO (955) 1.6 JTDM	09/2008 →
FIAT	
BRAVO II (198) 1.4	04/2007 →
BRAVO II (198) 1.4 T-Jet	09/2007 →
BRAVO II (198) 1.6 D Multijet	03/2008 →
BRAVO II (198) 1.9 D Multijet	04/2007 → 12/2008
BRAVO II (198) 2.0 D Multijet	09/2008 →
CROMA (194) 1.9 D Multijet	06/2005 →
LINEA 1.6 D Multijet	06/2009 →
PUNTO / GRANDE PUNTO (199) 1.9 D Multijet	10/2005 →
LANCIA	
DELTA III (844) 1.6 D Multijet	06/2009 →
DELTA III (844) 1.9 D Multijet	01/2009 →
DELTA III (844) 2.0 D Multijet	09/2008 →
MUSA (350) 1.6 D Multijet	07/2008 →
MERCEDES-BENZ	
CLASSE C (W204) C 280 4-matic (204.081)	06/2009 →

063377018010 MAN7018 120A 12V	
ALFA ROMEO	
159 1.9 JTDM 8V	09/2005 →
159 Sportwagon 1.9 JTDM 8V	03/2006 →
MITO (955) 1.6 JTDM	09/2008 →

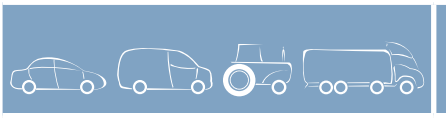


063377018010 MAN7018 120A 12V	
FIAT	
BRAVO II (198) 1.4	04/2007 →
BRAVO II (198) 1.4 T-Jet	09/2007 →
BRAVO II (198) 1.6 D Multijet	03/2008 →
BRAVO II (198) 1.9 D Multijet	04/2007 →
CROMA (194) 1.9 D Multijet	06/2005 →
LINEA 1.6 D Multijet	06/2009 →
LANCIA	
DELTA III (844) 1.6 D Multijet	09/2008 →
DELTA III (844) 1.9 D Multijet	01/2009 →
DELTA III (844) 2.0 D Multijet	09/2008 →

063377019010 MAN7019 90A 12V	
ALFA ROMEO	
MITO (955) 1.3 JTDM	09/2008 →
FIAT	
PUNTO / GRANDE PUNTO (199) 1.3 D Multijet	10/2005 →

063377020010 MAN7020 105A 12V	
FIAT	
PUNTO / GRANDE PUNTO (199) 1.3 D Multijet	10/2005 →

063377021010 MAN7021 75A 12V	
LANCIA	
YPSILON (843) 1.3 D Multijet	09/2006 →

063377022010 MAN7022 90A 12V	
FIAT	
DOBLO (119) 1.3 D Multijet	10/2005 →
DOBLO (119) 1.3 JTD	05/2005 →
DOBLO (152) 1.3 D Multijet	02/2010 →
DOBLO Cargo (223) 1.3 D Multijet	10/2005 →
DOBLO Cargo (263) 1.3 D Multijet	02/2010 →
IDEA 1.3 D Multijet	10/2005 →
LINEA 1.3 D Multijet	06/2007 →
PUNTO / GRANDE PUNTO (199) 1.3 D Multijet	10/2005 →
PUNTO EVO 1.3 D Multijet	10/2009 →

063377023010 MAN7023 105A 12V	
FIAT	
DOBLO (119) 1.3 D Multijet	10/2005 →
DOBLO (119) 1.3 JTD	05/2005 →
DOBLO (152) 1.3 D Multijet	02/2010 →
DOBLO Cargo (223) 1.3 D Multijet	10/2005 →
DOBLO Cargo (263) 1.3 D Multijet	02/2010 →
IDEA 1.3 D Multijet	10/2005 →
LINEA 1.3 D Multijet	06/2007 →




063377023010 MAN7023 105A 12V	
FIAT	
PUNTO / GRANDE PUNTO (199) 1.3 D Multijet	10/2005 →
PUNTO EVO 1.3 D Multijet	10/2009 →
LANCIA	
MUSA (350) 1.3 D Multijet	09/2006 →
063377024010 MAN7024 70A 12V	
FIAT	
DOBLO (119) 1.3 D Multijet	10/2005 →
DOBLO (152) 1.3 D Multijet	02/2010 →
DOBLO Cargo (223) 1.6 Natural Power	09/2002 →
DOBLO Cargo (263) 1.3 D Multijet	02/2010 →
LINEA 1.3 D Multijet	06/2007 →
PUNTO / GRANDE PUNTO (199) 1.3 D Multijet	10/2005 →
PUNTO EVO 1.3 D Multijet	10/2009 →
LANCIA	
YPSILON (843) 1.3 D Multijet	09/2006 →
063377025010 MAN7025 105A 12V	
ALFA ROMEO	
MITO (955) 1.3 JTDM	10/2009 →
FIAT	
500 1.3 D Multijet	12/2009 →
500 C 1.3 D Multijet	09/2009 →
DOBLO (152) 1.3 D Multijet	02/2010 →
LINEA 1.3 D Multijet	06/2007 →
PUNTO EVO 1.3 D Multijet	10/2009 →
063377026010 MAN7026 120A 12V	
ALFA ROMEO	
159 1.8 MPI	03/2007 →
159 1.8 TBi	05/2009 →
159 Sportwagon 1.8 MPI	03/2007 →
159 Sportwagon 1.8 TBi	05/2009 →
BRERA 1.8 TBi	05/2009 →
GIULIETTA (940) 1.8 TBi	04/2010 →
SPIDER (939) 1.8 TBi	05/2009 →
LANCIA	
DELTA III (844) 1.8	01/2009 →
063377027010 MAN7027 120A 12V	
FIAT	
500 1.2	10/2007 →
500 1.4	10/2007 →
500 1.4 Abarth	08/2008 →
500 C 1.2	09/2009 →
500 C 1.4	09/2009 →




063377027010 MAN7027 120A 12V	
FIAT	
DOBLO (152) 1.4	02/2010 →
DOBLO Cargo (263) 1.4	02/2010 →
IDEA 1.4	12/2003 →
IDEA 1.4 16V	01/2004 →
PUNTO / GRANDE PUNTO (199) 1.2	10/2005 →
PUNTO / GRANDE PUNTO (199) 1.4	10/2005 →
PUNTO / GRANDE PUNTO (199) 1.4 16V	10/2005 →
PUNTO / GRANDE PUNTO (199) 1.4 Abarth	12/2007 →
PUNTO / GRANDE PUNTO (199) 1.4 LPG	12/2008 →
PUNTO EVO 1.2	10/2009 →
LANCIA	
MUSA (350) 1.4	10/2004 →
063377028010 MAN7028 120A 12V	
ALFA ROMEO	
MITO (955) 1.3 JTDM	10/2009 →
FIAT	
500 1.3 D Multijet	12/2009 →
500 C 1.3 D Multijet	09/2009 →
DOBLO (119) 1.3 JTD	05/2005 →
DOBLO (152) 1.3 D Multijet	02/2010 →
DOBLO Cargo (223) 1.3 D Multijet	10/2005 →
DOBLO Cargo (263) 1.3 D Multijet	02/2010 →
FIORINO Cassone / Furgonato / Promiscuo 1.3 D Multijet	02/2008 →
IDEA 1.3 JTD	01/2004 →
PUNTO EVO 1.3 D Multijet	10/2009 →
QUBO 1.3 D Multijet	01/2009 →
LANCIA	
MUSA (350) 1.3 D Multijet	09/2006 →
063377029010 MAN7029 120A 12V	
FIAT	
PUNTO EVO 1.3 D Multijet	10/2009 →
063377030010 MAN7030 90A 12V	
ALFA ROMEO	
MITO (955) 1.4	09/2008 →
MITO (955) 1.4 Turbo	09/2008 →
MITO (955) 1.6 JTDM	09/2008 →
FIAT	
500 1.2	10/2007 →
500 1.3 D Multijet	12/2009 →
500 1.4	10/2007 →
500 C 1.2	09/2009 →
500 C 1.3 D Multijet	09/2009 →
500 C 1.4	09/2009 →




063377030010 MAN7030 90A 12V

FIAT		
DOBLO (119) 1.4	10/2005 →	
DOBLO (152) 1.4	02/2010 →	
DOBLO Cargo (223) 1.4	10/2005 →	
DOBLO Cargo (263) 1.4	02/2010 →	
LINEA 1.4	06/2007 →	
PUNTO / GRANDE PUNTO (199) 1.2	10/2005 →	
PUNTO / GRANDE PUNTO (199) 1.4	10/2005 →	
PUNTO EVO 1.2	10/2009 →	
PUNTO EVO 1.4	10/2009 →	
PUNTO EVO 1.4 16V	10/2009 →	

063377031010 MAN7031 105A 12V

FIAT		
50 1.2	10/2007 →	
500 1.4	10/2007 →	
500 C 1.2	09/2009 →	
500 C 1.4	09/2009 →	
BRAVO II (198) 1.4	04/2007 →	
BRAVO II (198) 1.4 T-Jet	09/2007 →	
DOBLO (152) 1.4	02/2010 →	
DOBLO Cargo (263) 1.4	02/2010 →	
LINEA 1.4	06/2007 →	
PUNTO / GRANDE PUNTO (199) 1.2	10/2005 →	
PUNTO / GRANDE PUNTO (199) 1.4	10/2005 →	
PUNTO EVO 1.2	10/2009 →	
PUNTO EVO 1.4	10/2009 →	
PUNTO EVO 1.4 16V	10/2009 →	

063377300010 MAN7300 90A 12V

CITROEN		
C2 (JM_) 1.1	09/2003 →	
C3 (FC_) 1.1 i	02/2002 →	
C3 (FC_) 1.6 16V	02/2002 →	
C3 II 1.1	11/2009 →	
C3 Pluriel (HB_) 1.4	05/2003 →	
C3 Pluriel (HB_) 1.6	05/2003 →	
C4 (LC_) 1.6 16V	11/2004 →	
XSARA (N1) 1.4 HDi	01/2003 →	03/2005
IVECO		
DAILY I Autobus A 40-10 (94139111, 94139131, 94139311, 94139315, 94139317, ..)	01/1991 →	12/1996
DAILY I Autobus A 40-10 (94139111, 94139131, 94139311, 94139315, 94139317, ..)	09/1996 →	
DAILY I Cassone / Furgonato / Promiscuo 35-10 (10314204, 10314211, 10314212, 10314217, 10314411, 103..)	01/1985 →	08/1998

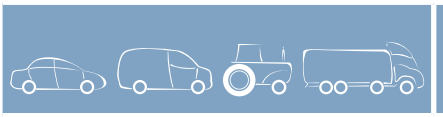


063377300010 MAN7300 90A 12V

IVECO		
DAILY I Cassone / Furgonato / Promiscuo 40-10 4x4 (15214104, 15214111, 15214117, 15215111)	01/1997 →	
DAILY I Cassone / Furgonato / Promiscuo 40-10 V	01/1985 →	04/1996
DAILY I Pianale piatto/Telaio 35-10	01/1989 →	05/1999
DAILY I Pianale piatto/Telaio 40-10	01/1985 →	12/1989
DAILY I Pianale piatto/Telaio 40-10 W 4x4	01/1997 →	05/1999
DAILY I Ribaltabile 35-10 K (15030111, 15030211, 15030311, 15031111, 15031117, ..)	01/1997 →	
DAILY II Cassone / Furgonato / Promiscuo 35 S 10 (ANJA41A1, ANJA42A2, ANJA42AB, ANJA43A, ANJAV1A, AGJ..)	09/2002 →	
DAILY II Pianale piatto/Telaio 35 C 10 V , 35 S 10 V (AMJA11A1, AMJA14A1, AMJA64A1, AMJA65A..)	09/2002 →	
DAILY III Cassone / Furgonato / Promiscuo 35C10, 35S10	05/2006 →	
DAILY III Cassone / Furgonato / Promiscuo 40C10 V	05/2006 →	
DAILY III Pianale piatto/Telaio 35C10, 35S10	05/2006 →	
DAILY III Pianale piatto/Telaio 40C10, 40S10	05/2006 →	
DAILY III Ribaltabile 35C10 K	05/2006 →	
PEUGEOT		
307 Break (3E) 1.6 16V	04/2002 →	
307 SW (3H) 1.6 16V	04/2002 →	

063377301010 MAN7301 80A 12V

CITROEN		
C2 (JM_) 1.1	09/2003 →	
C2 (JM_) 1.4	09/2003 →	
C2 (JM_) 1.4 16V	06/2006 →	
C2 (JM_) 1.6	09/2003 →	
C2 (JM_) 1.6 VTS	01/2005 →	
C3 (FC_) 1.1 i	02/2002 →	
C3 (FC_) 1.4 16V	12/2003 →	
C3 (FC_) 1.4 i	02/2002 →	
C3 (FC_) 1.4 i Bivalent	02/2002 →	
C3 (FC_) 1.6 16V	02/2002 →	
C3 II 1.1	11/2009 →	
C3 Pluriel (HB_) 1.4	05/2005 →	
C3 Pluriel (HB_) 1.6	05/2003 →	
C4 (LC_) 1.4 16V	11/2004 →	
C4 (LC_) 1.6 16V	11/2004 →	
C4 (LC_) 1.6 16V Bio-Flex	09/2007 →	




063377301010 MAN7301 80A 12V

CITROEN		
C4 Coupe (LA_) 1.4 16V	11/2004 →	
C4 Coupe (LA_) 1.6 16V	11/2004 →	
1007 (KM_) 1.4	04/2005 →	
1007 (KM_) 1.4 16V	01/2006 →	
1007 (KM_) 1.6 16V	04/2005 →	
206 2 volumi /Coda spiovente (2A/C) 1.6 16V	06/2003 →	
206 CC (2D) 1.6 16V	02/2001 →	
206 SW (2E/K) 1.6 16V	10/2005 →	
207 (WA_, WC_) 1.4	03/2006 →	
207 (WA_, WC_) 1.4 16V	03/2006 →	
207 (WA_, WC_) 1.6 16V	03/2006 →	
207 SW (WK_) 1.4	10/2007 →	
307 (3A/C) 1.4	08/2000 →	
307 (3A/C) 1.4 16V	06/2005 →	
307 (3A/C) 1.6 16V	08/2000 →	
307 (3A/C) 1.6 BioFlex	09/2007 →	
307 Break (3E) 1.4	04/2002 → 09/2003	
307 Break (3E) 1.4 16V	11/2003 →	
307 Break (3E) 1.6 16V	04/2002 →	
307 Break (3E) 1.6 BioFlex	09/2007 →	
307 CC (3B) 1.6 16V	06/2005 →	
307 SW (3H) 1.4	04/2002 → 09/2003	
307 SW (3H) 1.4 16V	11/2003 →	
307 SW (3H) 1.6 16V	03/2002 →	
307 SW (3H) 1.6 BioFlex	09/2007 →	

063377409010 MAN7409 80A 12V

FORD		
FOCUS (DAW, DBW) 1.8 16V	10/1998 → 11/2004	
FOCUS (DAW, DBW) 2.0 16V	10/1998 → 11/2004	
FOCUS Station wagon (DNW) 1.8 16V	02/1999 → 10/2001	
FOCUS Station wagon (DNW) 1.8 BiFuel	02/2003 → 08/2004	
FOCUS Station wagon (DNW) 2.0 16V	02/1999 → 08/2004	
FOCUS Tre volumi (DFW) 1.8 16V	02/1999 → 10/2001	
FOCUS Tre volumi (DFW) 2.0 16V	02/1999 → 08/2004	
FORD AUSTRALIA		
FOCUS 2 volumi /Coda spiovente (LR) 1.8 i	09/2002 → 08/2004	
FOCUS 2 volumi /Coda spiovente (LR) 2.0 i	09/2002 → 08/2004	
FOCUS Tre volumi (LR) 2.0 i	09/2002 → 08/2004	

063377410010 MAN7410 80A 12V

FORD		
FOCUS (DAW, DBW) 1.4 16V	10/1998 → 11/2004	
FOCUS (DAW, DBW) 1.6 16V	10/1998 → 11/2004	
FOCUS Station wagon (DNW) 1.4 16V	02/1999 → 11/2004	
FOCUS Station wagon (DNW) 1.6 16V	02/1999 → 11/2004	




063377410010 MAN7410 80A 12V

FORD		
FOCUS Tre volumi (DFW) 1.4 16V	02/1999 → 11/2004	
FOCUS Tre volumi (DFW) 1.6 16V	02/1999 → 11/2004	

063377411010 MAN7411 90A 12V

FORD		
FOCUS (DAW, DBW) 1.4 16V	10/1998 → 11/2004	
FOCUS (DAW, DBW) 1.6 16V	10/1998 → 11/2004	
FOCUS (DAW, DBW) 1.8 16V	10/1998 → 11/2004	
FOCUS Station wagon (DNW) 1.4 16V	02/1999 → 11/2004	
FOCUS Station wagon (DNW) 1.6 16V	02/1999 → 11/2004	
FOCUS Station wagon (DNW) 1.8 16V	02/1999 → 11/2004	
FOCUS Tre volumi (DFW) 1.4 16V	02/1999 → 11/2004	
FOCUS Tre volumi (DFW) 1.6 16V	02/1999 → 11/2004	
FOCUS Tre volumi (DFW) 1.8 16V	02/1999 → 11/2004	

063377412010 MAN7412 90A 12V

FORD		
FOCUS (DAW, DBW) 1.8 Turbo DI / TDDi	10/1998 → 11/2004	
FOCUS Station wagon (DNW) 1.8 Turbo DI / TDDi	02/1999 → 11/2004	
FOCUS Tre volumi (DFW) 1.8 Turbo DI / TDDi	02/1999 → 11/2004	

063377413010 MAN7413 90A 12V

FORD		
FOCUS (DAW, DBW) 1.8 DI / TDDi	08/1999 → 11/2004	
FOCUS (DAW, DBW) 1.8 TDCi	03/2001 → 11/2004	
FOCUS (DAW, DBW) RS	10/2002 → 11/2004	
FOCUS Station wagon (DNW) 1.8 TDCi	03/2001 → 11/2004	
FOCUS Tre volumi (DFW) 1.8 TDCi	03/2001 → 11/2004	

063377414010 MAN7414 90A 12V

FORD		
FOCUS (DAW, DBW) 1.8 DI / TDDi	08/1999 → 08/2004	
FOCUS (DAW, DBW) 1.8 TDCi	08/2002 → 08/2004	
FOCUS (DAW, DBW) 2.0 16V	10/1998 → 11/2004	
FOCUS Station wagon (DNW) 1.8 DI / TDDi	08/1999 → 08/2004	
FOCUS Station wagon (DNW) 1.8 TDCi	08/2002 → 08/2004	
FOCUS Station wagon (DNW) 2.0 16V	02/1999 → 11/2004	
FOCUS Tre volumi (DFW) 1.8 TDCi	08/2002 → 08/2004	
FOCUS Tre volumi (DFW) 2.0 16V	02/1999 → 11/2004	

063377416010 MAN7416 150A 12V

FORD		
FIESTA V (JH_, JD_) 1.6 TDCi	11/2004 →	
FOCUS C-MAX 1.6 TDCi	10/2003 → 03/2007	
FOCUS C-MAX 2.0 TDCi	10/2003 → 03/2007	
FOCUS II (DA_) 1.6 TDCi	11/2004 →	
FOCUS II (DA_) 2.0 TDCi	11/2004 →	




063377416010 MAN7416 150A 12V	
FORD	
FOCUS II Cabriolet 2.0 TDCi	10/2006 →
FOCUS II Station wagon (DAW_) 1.6 TDCi	11/2004 →
FOCUS II Station wagon (DAW_) 2.0 TDCi	02/2005 →
FOCUS II Tre volumi (DA_) 1.6 TDCi	04/2005 →
FOCUS II Tre volumi (DA_) 2.0 TDCi	04/2005 →
FUSION (JU_) 1.6 TDCi	11/2004 →
KUGA 2.0 TDCi	03/2008 →
KUGA 2.0 TDCi 4x4	03/2008 →
FORD AUSTRALIA	
FOCUS 2 volumi /Coda spiovente (LT) 2.0 TDCi	04/2007 → 03/2009
MAZDA	
3 (BK) 1.6 DI Turbo	06/2004 →
3 Tre volumi (BK) 1.6 DI Turbo	06/2004 →
VOLVO	
C30 1.6 D	10/2006 →
C30 1.6 D2	10/2010 →
C30 2.0 D	10/2006 →
C70 II Cabriolet 2.0 D	01/2008 →
S40 II (MS) 1.6 D	01/2005 →
S40 II (MS) 2.0 D	01/2004 →
S40 II (MS) 2.0 D4	07/2005 →
V50 (MW) 1.6 D	01/2005 →
V50 (MW) 2.0 D	04/2004 →
063377417010 MAN7417 150A 12V	
FORD	
FOCUS C-MAX 1.8	04/2004 → 03/2007
063377418010 MAN7418 150A 12V	
FORD	
FOCUS C-MAX 1.8 TDCi	01/2005 → 03/2007
FOCUS II (DA_) 1.8 TDCi	01/2005 →
FOCUS II Station wagon (DAW_) 1.8 TDCi	11/2004 →
FOCUS II Tre volumi (DA_) 1.8 TDCi	04/2005 →
063377419010 MAN7419 150A 12V	
FORD	
FOCUS II (DA_) 2.0 TDCi	11/2004 →
FOCUS II Station wagon (DAW_) 2.0 TDCi	11/2004 →
FOCUS II Tre volumi (DA_) 2.0 TDCi	04/2005 →
063377420010 MAN7420 150A 12V	
FORD	
FOCUS C-MAX 2.0	04/2004 → 03/2007
FOCUS II (DA_) 2.0	11/2004 →
FOCUS II Station wagon (DAW_) 2.0	02/2005 →

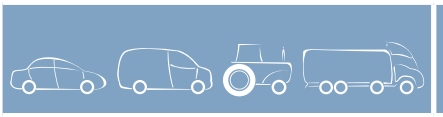


063377420010 MAN7420 150A 12V	
FORD AUSTRALIA	
FOCUS 2 volumi /Coda spiovente (LT) 2.0 i	05/2005 → 03/2009
063377421010 MAN7421 105A 12V	
FORD	
FOCUS C-MAX 1.6	10/2003 → 03/2007
FOCUS II (DA_) 1.6	11/2004 →
FOCUS II Cabriolet 1.6	10/2006 →
FOCUS II Station wagon (DAW_) 1.6	02/2005 →
FOCUS II Tre volumi (DA_) 1.6	04/2005 →
063377423010 MAN7423 70A 12V	
OPEL	
AGILA 1.3 CDTI	05/2008 →
AGILA (H00) 1.3 CDTI	08/2003 →
CORSA D 1.3 CDTI	08/2006 →
MERIVA 1.3 CDTI	04/2005 → 05/2010
VAUXHALL	
AGILA Mk II (B) 1.3 CDTI	01/2008 →
CORSA Mk IV (D) 1.3 CDTI	11/2006 →
063377424010 MAN7424 105A 12V	
OPEL	
ASTRA H 1.3 CDTI	08/2005 →
ASTRA H GTC 1.3 CDTI	08/2005 →
ASTRA H Station wagon 1.3 CDTI	08/2005 →
CORSA C (F08, F68) 1.3 CDTI	07/2003 →
CORSA C Furgonato (F08, W5L) 1.3 CDTI 16V	08/2005 →
CORSA D 1.3 CDTI	08/2006 →
MERIVA 1.3 CDTI	04/2005 → 05/2010
TIGRA TwinTop 1.3 CDTI	06/2004 →
VAUXHALL	
AGILA Mk II (B) 1.3 CDTI	01/2008 →
CORSA Mk IV (D) 1.3 CDTI	11/2006 →
063377425010 MAN7425 120A 12V	
OPEL	
AGILA 1.3 CDTI	05/2008 →
AGILA (H00) 1.3 CDTI	08/2003 →
CORSA C (F08, F68) 1.3 CDTI	07/2003 →
CORSA C Furgonato (F08, W5L) 1.3 CDTI 16V	08/2005 →
CORSA D 1.3 CDTI	08/2006 →
MERIVA 1.3 CDTI	04/2005 → 05/2010
TIGRA TwinTop 1.3 CDTI	06/2004 →
VAUXHALL	
AGILA Mk II (B) 1.3 CDTI	01/2008 →
CORSA Mk IV (D) 1.3 CDTI	11/2006 →




063377426010 MAN7426 120A 12V	
ALFA ROMEO	
MITO (955) 1.4	09/2008 →
MITO (955) 1.4 TB	09/2008 →
FIAT	
BRAVO II (198) 1.4 T-Jet	09/2007 →
LINEA 1.4	06/2007 →
LINEA 1.4 T-Jet	09/2007 →
PUNTO / GRANDE PUNTO (199) 1.4 T-Jet	09/2007 →
LANCIA	
DELTA III (844) 1.4	09/2008 →
MUSA (350) 1.6 D Multijet	07/2008 →
063377427010 MAN7427 120A 12V	
TOYOTA	
AVENSIS (_T22_) 2.0 D-4D (CDT220_)	10/1999 → 08/2002
AVENSIS Liftback (_T22_) 2.0 D-4D (CDT220_)	10/1999 → 02/2003
AVENSIS Station Wagon (_T22_) 1.9 D	09/2002 → 02/2003
AVENSIS Station Wagon (_T22_) 2.0 D-4D (CDT220_)	10/1999 → 08/2002
COROLLA (_E11_) 2.0 D-4D	09/2000 → 01/2002
COROLLA Compact (_E11_) 2.0 D-4D	09/2000 → 01/2002
COROLLA Wagon (__E11_) 1.4 (EE111_)	05/1997 → 09/1999
COROLLA Wagon (__E11_) 2.0 D-4D	09/2000 → 01/2002
COROLLA Wagon (__E11_) 2.0 D4d GS	08/2000 → 10/2001
063377428010 MAN7428 80A 12V	
TOYOTA	
CELICA (ZZT23_) 1.8 16V VT-i (ZZT230_)	11/1999 →
COROLLA (_E12U_, _E12J_) 1.4 VVT-i	01/2002 →
COROLLA (_E12U_, _E12J_) 1.6 VVT-i	01/2002 →
COROLLA Station wagon (_E12J_, _E12T_) 1.4 VVT-i	01/2002 →
COROLLA Station wagon (_E12J_, _E12T_) 1.6 VVT-i	01/2002 →
COROLLA Tre volumi (_E12J_, _E12T_) 1.4 VVT-i	08/2002 →
COROLLA Tre volumi (_E12J_, _E12T_) 1.6 VVT-i	08/2002 →
063377429010 MAN7429 70A 12V	
TOYOTA	
COROLLA (_E12U_, _E12J_) 1.4 VVT-i	09/2002 →
COROLLA (_E12U_, _E12J_) 1.6 VVT-i	09/2002 →
COROLLA Station wagon (_E12J_, _E12T_) 1.4 VVT-i	01/2002 →
COROLLA Station wagon (_E12J_, _E12T_) 1.6 VVT-i	01/2002 →




063377429010 MAN7429 70A 12V	
TOYOTA	
COROLLA Verso (_E12J_) 1.4 VVT-i	01/2002 → 05/2004
063377430010 MAN7430 80A 12V	
TOYOTA	
CELICA (ZZT23_) 1.8 16V TS (ZZT231_)	08/2000 →
063377431010 MAN7431 80A 12V	
TOYOTA	
COROLLA Verso (_E12J_) 1.6 VVT-i	01/2002 → 01/2004
COROLLA Verso (_E12J_) 1.8 VVT-i	01/2002 → 01/2004
MR 2 III (_W3_) 1.8 16V VT-i (ZZW30)	04/2000 →
063377432010 MAN7432 90A 12V	
TOYOTA	
RAV 4 II (XA2) 1.8 VVTi	02/2001 →
063377433010 MAN7433 90A 12V	
TOYOTA	
AVENSIS (_T22_) 2.0 VVT-i	10/2000 → 02/2003
AVENSIS Liftback (_T22_) 2.0 VVT-i	10/2000 → 02/2003
AVENSIS Station Wagon (_T22_) 2.0 VVT-i	10/2000 → 02/2003
063377434010 MAN7434 90A 12V	
TOYOTA	
RAV 4 II (XA2) 2.0 VVTi 4WD	06/2000 →
RAV 4 II (XA2) 2.4 VVTi 4x4	08/2003 → 10/2005
063377435010 MAN7435 100A 12V	
TOYOTA	
AVENSIS VERSO (_ACM2_) 2.0 VVT-i	11/2003 →
PREVIA (CLR3_, ACR3_) 2.4 16V	04/2004 →
RAV 4 II (XA2) 2.4 VVTi 4x4	08/2003 → 10/2005
063377436010 MAN7436 80A 12V	
TOYOTA	
RAV 4 I (SXA1_) 2.0 16V	11/1995 → 09/1997
063377437010 MAN7437 80A 12V	
TOYOTA	
RAV 4 I (SXA1_) 2.0 16V	10/1997 → 06/2000
063377438010 MAN7438 80A 12V	
TOYOTA	
YARIS (_P1_) 1.5 TS (NCP13)	04/2003 →
YARIS (_P1_) 1.5 VVT-i TS	04/2001 → 10/2004
YARIS VERSO (NC/LP2_) 1.5 (NCP21)	03/2000 →
063377439010 MAN7439 70A 12V	
TOYOTA	
MR 2 II (_W2_) 2.0 16V (SW20)	12/1989 → 11/1993
YARIS (_P1_) 1.0 16V	04/2003 →
YARIS (_P1_) 1.0 16V (SCP10_)	04/1999 →
YARIS (_P1_) 1.3	05/2002 →




063377440010 MAN7440 90A 12V		
TOYOTA		
YARIS (_P1_) 1.0 16V	04/2003 →	
YARIS (_P1_) 1.0 16V (SCP10_)	04/1999 →	
063377441010 MAN7441 70A 12V		
TOYOTA		
YARIS (_P1_) 1.0 16V	04/2003 →	
YARIS (_P1_) 1.0 16V (SCP10_)	04/1999 →	
063377442010 MAN7442 70A 12V		
TOYOTA		
YARIS (_P1_) 1.3 16V (NCP10_)	06/2003 →	
YARIS VERSO (NC/LP2_) 1.3 (NCP22)	11/1999 →	
063377443010 MAN7443 105A 12V		
FORD		
C-MAX 1.8 TDCi	02/2007 →	
FOCUS C-MAX 1.8 TDCi	01/2005 →	03/2007
FOCUS II (DA_) 1.8 TDCi	01/2005 →	
FOCUS II Station wagon (DAW_) 1.8 TDCi	11/2004 →	
FOCUS II Tre volumi (DA_) 1.8 TDCi	04/2005 →	
063377460010 MAN7460 65A 12V		
PERKINS		
ENGINE Engine for Tractors Application	→	
063377461010 MAN7461 75A 12V		
JCB LANDPOWER		
FASTRAC 1135	01/1997 →	
FASTRAC 125/135/155/185	01/1993 →	
FASTRAC 125/145	01/1991 →	01/1993
LOADALL 525-58	01/1987 →	01/1997
LOADALL 525-67	01/1987 →	01/1997
MANITOU		
MLB 625 T	→	
MT 1030 S	→	
MT 1033 HLT	→	
MT 1235 S-ST	→	
MT 1240 LT-ULTRA	→	
MT 1335 H-SLT-ORH	→	
MT 1335 SL-SLT	→	
MT 1340 SLT-MU-ORH	→	
MT 1340 SLT-SLT-ULTRA	→	
MT 1435 H-SLT-MU-ORH	→	
MT 1435 H-SL-Turbo	→	
MT 1435 SL-SLT	→	
MT 1440 SL-T	→	
MT 1440 SLT-MU-ORH-RC	→	
MT 1440 SLT-SLT-ULT	→	
MT 1740 SLT-MU-ORH	→	

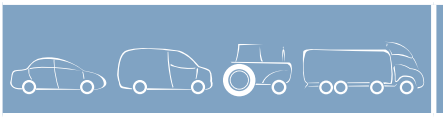


063377461010 MAN7461 75A 12V		
MANITOU		
MT 1740 SLT-SLT-ULTRA	→	
MT 1740 SLT-ULTRA-ORH-RC	→	
MT 1745 HSLT-ULTRA	→	
MT 732 Tutte	→	
MT 928 Tutte	→	
MT 932 Tutte	→	
MT 940 LT	→	
TEREX Tutte	→	
TEREX		
Backhoe Loaders - Center Mount TX760B	→	
Backhoe Loaders - Center Mount TX860B	→	
Backhoe Loaders - Center Mount TX870B	→	
Backhoe Loaders - Sideshift 860 ELITE	→	
Backhoe Loaders - Sideshift 860 SX	→	
Backhoe Loaders - Sideshift 880 ELITE	→	
Backhoe Loaders - Sideshift 880 SX	→	
Backhoe Loaders - Sideshift 970 ELITE	→	
Backhoe Loaders - Sideshift 980 ELITE	→	
Backhoe Loaders - Sideshift TLB840	→	
063377462010 MAN7462 85A 12V		
PERKINS		
ENGINE Engine for Tractors Application	→	
063377463010 MAN7463 100A 12V		
LAND ROVER		
RANGE ROVER I (AE, AN, HAA, HAB, HAM, HBM, RE, RN) 3.9 Cat.	11/1988 →	07/1994
RANGE ROVER I (AE, AN, HAA, HAB, HAM, HBM, RE, RN) 3.9 Vogue SEI	11/1988 →	07/1994
063377464010 MAN7464 120A 12V		
PERKINS		
ENGINE Engine for Tractors Application	→	
063377465010 MAN7465 55A 24V		
PERKINS		
ENGINE Engine for Tractors Application	→	
063377466010 MAN7466 80A 24V		
PERKINS		
ENGINE Engine for Tractors Application	→	
063377490010 MAN7490 120A 12V		
OPEL		
AGILA (H00) 1.3 CDTI	08/2003 →	
ASTRA H 1.9 CDTI	11/2006 →	
ASTRA H 1.9 CDTI 16V	11/2006 →	
ASTRA H GTC 1.9 CDTI	11/2006 →	
ASTRA H Station wagon 1.9 CDTI	11/2006 →	




063377490010 MAN7490 120A 12V

OPEL	
ASTRA H Station wagon 1.9 CDTI 16V	11/2006 →
COMBO Cassone / Furgonato / Promiscuo 1.3 CDTI 16V	08/2005 →
COMBO Tour 1.3 CDTI 16V	10/2004 →
SIGNUM 1.9 CDTI	04/2004 →
TIGRA TwinTop 1.3 CDTI	07/2008 →
VECTRA C 1.9 CDTI	04/2004 →
VECTRA C GTS 1.9 CDTI	04/2004 →
VECTRA C Station wagon 1.9 CDTI	04/2004 →
ZAFIRA 1.9 CDTI	07/2008 →
VAUXHALL	
ASTRA Mk V (H) 2 volumi /Coda spiovente 1.9 CDTI	11/2006 → 05/2009
ASTRA Mk V (H) Sport Hatch 1.9 CDTi	11/2006 →
ASTRA Mk V (H) Station wagon 1.9 CDTi	11/2006 → 03/2009
SIGNUM 1.9 CDTI	05/2004 → 03/2008
SIGNUM 1.9 CDTI 16V	05/2004 → 03/2008
VECTRA Mk II (C) 1.9 CDTI	04/2004 → 07/2008
VECTRA Mk II (C) 1.9 CDTI 16V	04/2004 → 08/2005
VECTRA Mk II (C) GTS 1.9 CDTI	04/2004 → 07/2008
VECTRA Mk II (C) GTS 1.9 CDTI 16V	04/2004 → 08/2005
VECTRA Mk II (C) Station wagon 1.9 CDTI	04/2004 → 07/2008
VECTRA Mk II (C) Station wagon 1.9 CDTI 16V	04/2004 → 08/2005
ZAFIRA Mk II (B) 1.9 CDTI	02/2009 →

063377491010 MAN7491 130A 12V

OPEL	
ASTRA H 1.9 CDTI	09/2005 →
ASTRA H 1.9 CDTI 16V	09/2005 →
ASTRA H GTC 1.9 CDTI	09/2005 →
ASTRA H Station wagon 1.9 CDTI	09/2005 →
ASTRA H Station wagon 1.9 CDTI 16V	09/2005 →
ASTRA H Tre volumi 1.6	02/2007 →
ASTRA H TwinTop 1.6	10/2005 →
ASTRA H TwinTop 1.6 Turbo	02/2007 →
ASTRA H TwinTop 1.9 CDTi	12/2005 →
SIGNUM 1.9 CDTI	04/2004 →
VECTRA C 1.9 CDTI	04/2004 →
VECTRA C GTS 1.9 CDTI	04/2004 →
VECTRA C Station wagon 1.9 CDTI	04/2004 →
ZAFIRA 1.9 CDTI	07/2008 →
SAAB	
9-3 (YS3F) 1.9 TiD	09/2004 →
9-3 Station wagon 1.9 TiD	06/2005 →




063377491010 MAN7491 130A 12V

VAUXHALL	
ASTRA Mk V (H) 2 volumi /Coda spiovente 1.9 CDTI	01/2004 → 05/2009
ASTRA Mk V (H) Sport Hatch 1.9 CDTi	03/2005 →
ASTRA Mk V (H) Station wagon 1.9 CDTi	11/2005 → 03/2009
ASTRA TwinTop Mk V (H) 1.9 CDTi	01/2006 →
VECTRA Mk II (C) 1.9 CDTI	04/2004 → 07/2008
VECTRA Mk II (C) 1.9 CDTI 16V	04/2004 → 08/2005
VECTRA Mk II (C) GTS 1.9 CDTI	04/2004 → 07/2008
VECTRA Mk II (C) GTS 1.9 CDTI 16V	04/2004 → 08/2005
VECTRA Mk II (C) Station wagon 1.9 CDTI	04/2004 → 07/2008
VECTRA Mk II (C) Station wagon 1.9 CDTI 16V	04/2004 → 08/2005
ZAFIRA Mk II (B) 1.9 CDTI	02/2009 →

063377492010 MAN7492 105A 12V

OPEL	
ASTRA H 1.9 CDTI	09/2005 →
ASTRA H 1.9 CDTI 16V	09/2005 →
ASTRA H GTC 1.9 CDTI	09/2005 →
ASTRA H Station wagon 1.9 CDTI	09/2005 →
ASTRA H Station wagon 1.9 CDTI 16V	09/2005 →
SIGNUM 1.9 CDTI	04/2004 →
VECTRA C 1.9 CDTI	04/2004 →
VECTRA C GTS 1.9 CDTI	04/2004 →
VECTRA C Station wagon 1.9 CDTI	04/2004 →
ZAFIRA 1.9 CDTI	07/2008 →
VAUXHALL	
ASTRA Mk V (H) 2 volumi /Coda spiovente 1.9 CDTI	01/2004 → 05/2009
ASTRA Mk V (H) Sport Hatch 1.9 CDTi	03/2005 →
ASTRA Mk V (H) Station wagon 1.9 CDTi	11/2005 → 03/2009
SIGNUM 1.9 CDTI	05/2004 → 03/2008
SIGNUM 1.9 CDTI 16V	05/2004 → 03/2008
VECTRA Mk II (C) 1.9 CDTI	04/2004 → 07/2008
VECTRA Mk II (C) 1.9 CDTI 16V	04/2004 → 08/2005
VECTRA Mk II (C) GTS 1.9 CDTI	04/2004 → 07/2008
VECTRA Mk II (C) GTS 1.9 CDTI 16V	04/2004 → 08/2005
VECTRA Mk II (C) Station wagon 1.9 CDTI	04/2004 → 07/2008
VECTRA Mk II (C) Station wagon 1.9 CDTI 16V	04/2004 → 08/2005
ZAFIRA Mk II (B) 1.9 CDTI	02/2009 →

063377493010 MAN7493 70A 12V

OPEL	
ASTRA H 1.3 CDTI	08/2005 →
ASTRA H GTC 1.3 CDTI	04/2005 →




063377493010 MAN7493 70A 12V	
OPEL	
ASTRA H Station wagon 1.3 CDTI	08/2005 →
ASTRA H Tre volumi 1.3 CDTi	02/2007 →
CORSA C (F08, F68) 1.3 CDTI	06/2003 →
CORSA C Furgonato (F08, W5L) 1.3 CDTI 16V	08/2005 →
MERIVA B 1.3 CDTI	06/2010 →
TIGRA TwinTop 1.3 CDTI	06/2004 →
063377494010 MAN7494 105A 12V	
FIAT	
500 1.3 D Multijet	10/2007 →
500 C 1.3 D Multijet	09/2009 →
DOBLO Cargo (223) 1.3 JTD 16V	05/2004 →
DOBLO Cargo (223) 1.3 JTD 16V Multijet	08/2006 →
IDEA 1.3 JTD	01/2004 →
PUNTO (188) 1.3 JTD 16V	06/2003 →
PUNTO Van (188AX) 1.3 JTD	06/2003 → 10/2005
STRADA (178E) 1.3 D Multijet	05/2006 →
LANCIA	
MUSA (350) 1.3 D Multijet	10/2004 →
OPEL	
AGILA 1.3 CDTI	09/2007 →
AGILA (H00) 1.3 CDTI	08/2003 →
ASTRA H 1.3 CDTI	08/2005 →
ASTRA H GTC 1.3 CDTI	04/2005 →
ASTRA H Station wagon 1.3 CDTI	08/2005 →
ASTRA H Tre volumi 1.3 CDTi	02/2007 →
CORSA C (F08, F68) 1.3 CDTI	06/2003 →
CORSA C Furgonato (F08, W5L) 1.3 CDTI 16V	08/2005 →
MERIVA 1.3 CDTI	09/2003 → 05/2010
MERIVA B 1.3 CDTI	06/2010 →
TIGRA TwinTop 1.3 CDTI	06/2004 →
VAUXHALL	
ASTRA Mk V (H) 2 volumi /Coda spiovente 1.3 CDTI	10/2005 → 05/2009
ASTRA Mk V (H) Sport Hatch 1.3 CDTi	04/2005 →
ASTRA Mk V (H) Sport Hatch 1.4 i 16V	03/2005 →
ASTRA Mk V (H) Station wagon 1.3 CDTi	08/2005 → 03/2009
ASTRAVAN Mk V (H) 1.3 CDTi	08/2005 →
COMBO Mk II (C) 1.3 CDTI 16V	10/2005 →
CORSA Mk III (C) 1.3 CDTI 16V	04/2004 → 09/2006
MERIVA Mk I (A) 1.3 CDTI	09/2003 → 10/2009
TIGRA TwinTop 1.3 CDTI	06/2004 →

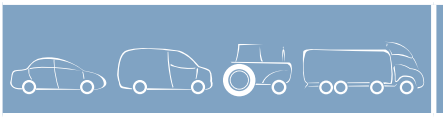


063377495010 MAN7495 120A 12V	
OPEL	
ASTRA H 1.3 CDTI	08/2005 →
063377495010 MAN7495 120A 12V	
OPEL	
ASTRA H GTC 1.3 CDTI	04/2005 →
ASTRA H Station wagon 1.3 CDTI	08/2005 →
ASTRA H Tre volumi 1.3 CDTi	02/2007 →
MERIVA B 1.3 CDTI	06/2010 →
063377496010 MAN7496 70A 12V	
OPEL	
AGILA (H00) 1.2 16V Twinport	07/2004 →
063380001010 MAN8001 104A 12V	
FORD	
FIESTA V (JH_, JD_) 1.3	11/2001 →
FIESTA Van 1.3	10/2003 →
KA (RB_) 1.3 i	08/2002 → 11/2008
KA (RB_) 1.6 i	07/2003 → 11/2008
STREET KA 1.6	05/2003 → 07/2005
063380002010 MAN8002 80A 12V	
FORD	
FIESTA V (JH_, JD_) 1.4 TDCi	11/2001 →
FIESTA Van 1.4 TDCi	10/2003 →
FUSION (JU_) 1.4 TDCi	08/2002 →
MAZDA	
2 (DY) 1.4 CD	04/2003 →
063380004010 MAN8004 124A 12V	
FORD	
MONDEO III (B5Y) 1.8 16V	11/2000 → 08/2007
MONDEO III (B5Y) 1.8 SCi	06/2003 → 08/2007
MONDEO III (B5Y) 2.0 16V	11/2000 → 08/2007
MONDEO III Station wagon (BWY) 1.8 16V	11/2000 → 08/2007
MONDEO III Station wagon (BWY) 1.8 SCi	06/2003 → 08/2007
MONDEO III Station wagon (BWY) 2.0 16V	11/2000 → 08/2007
MONDEO III Tre volumi (B4Y) 1.8 16V	11/2000 → 08/2007
MONDEO III Tre volumi (B4Y) 1.8 SCi	06/2003 → 08/2007
MONDEO III Tre volumi (B4Y) 2.0 16V	11/2000 → 08/2007
063380005010 MAN8005 124A 12V	
FORD	
MONDEO III (B5Y) 1.8 16V	11/2000 → 08/2007
MONDEO III (B5Y) 2.0 16V	11/2000 → 08/2007
MONDEO III (B5Y) 2.0 16V DI / TDDi / TDCi	11/2000 → 08/2007
MONDEO III (B5Y) 2.0 16V TDDi / TDCi	11/2000 → 08/2007
MONDEO III (B5Y) 2.0 TDCi	10/2001 → 08/2007
MONDEO III (B5Y) 2.2 TDCi	09/2004 → 08/2007
MONDEO III (B5Y) ST220	04/2002 → 08/2007




063380005010 MAN8005 124A 12V			
FORD			
MONDEO III Station wagon (BWY) 1.8 16V	11/2000	→	08/2007
MONDEO III Station wagon (BWY) 2.0 16V	11/2000	→	08/2007
MONDEO III Station wagon (BWY) 2.0 16V DI / TDDi / TDCi	11/2000	→	08/2007
MONDEO III Station wagon (BWY) 2.0 16V TDDi / TDCi	11/2000	→	08/2007
MONDEO III Station wagon (BWY) 2.0 TDCi	10/2001	→	08/2007
MONDEO III Station wagon (BWY) 2.2 TDCi	09/2004	→	08/2007
MONDEO III Station wagon (BWY) ST220	04/2002	→	08/2007
MONDEO III Tre volumi (B4Y) 1.8 16V	11/2000	→	08/2007
MONDEO III Tre volumi (B4Y) 2.0 16V	11/2000	→	08/2007
MONDEO III Tre volumi (B4Y) 2.0 16V DI / TDDi / TDCi	11/2000	→	08/2007
MONDEO III Tre volumi (B4Y) 2.0 16V TDDi / TDCi	11/2000	→	08/2007
MONDEO III Tre volumi (B4Y) 2.0 TDCi	10/2001	→	08/2007
MONDEO III Tre volumi (B4Y) 2.2 TDCi	09/2004	→	08/2007
MONDEO III Tre volumi (B4Y) ST220	04/2002	→	08/2007
JAGUAR			
X-TYPE (CF1) 2.2 D	10/2005	→	
X-TYPE Estate 2.0 D	02/2004	→	10/2005
X-TYPE Estate 2.2 D	10/2005	→	
063380006010 MAN8006 124A 12V			
FORD			
MONDEO III (B5Y) 2.5 V6 24V	11/2000	→	08/2007
MONDEO III Station wagon (BWY) 2.5 V6 24V	11/2000	→	08/2007
MONDEO III Tre volumi (B4Y) 2.5 V6 24V	11/2000	→	08/2007
063380007010 MAN8007 124A 12V			
FORD			
TRANSIT Autobus (FD_ _, FB_ _, FS_ _, FZ_ _, FC_ _) 2.4 DI (F_B_, F_C_, F_A_)	01/2000	→	05/2006
TRANSIT Autobus (FD_ _, FB_ _, FS_ _, FZ_ _, FC_ _) 2.4 DI (RWD) (F_B_, F_C_)	01/2000	→	05/2006
TRANSIT Autobus (FD_ _, FB_ _, FS_ _, FZ_ _, FC_ _) 2.4 TD	08/2000	→	08/2003
TRANSIT Autobus (FD_ _, FB_ _, FS_ _, FZ_ _, FC_ _) 2.4 TDCi	03/2004	→	05/2006
TRANSIT Autobus (FD_ _, FB_ _, FS_ _, FZ_ _, FC_ _) 2.4 TDdi	08/2000	→	03/2006
TRANSIT Autobus (FD_ _, FB_ _, FS_ _, FZ_ _, FC_ _) 2.4 TDE (F_C_, F_B_, F_A_)	07/2001	→	05/2006
TRANSIT Furgonato (FA_ _) 2.4 DI (FAA_, FAB_, FAC_, FAD_)	01/2000	→	05/2006




063380007010 MAN8007 124A 12V			
FORD			
TRANSIT Furgonato (FA_ _) 2.4 DI (RWD) (FAA_, FAB_, FAC_, FAD_)	01/2000	→	05/2006
TRANSIT Furgonato (FA_ _) 2.4 TD	08/2000	→	08/2003
TRANSIT Furgonato (FA_ _) 2.4 TDCi	03/2004	→	05/2006
TRANSIT Furgonato (FA_ _) 2.4 TDdi	08/2000	→	03/2006
TRANSIT Furgonato (FA_ _) 2.4 TDE	07/2001	→	05/2006
TRANSIT Pianale piatto/Telaio (FM_ _, FN_ _) 2.4 DI (F_A_, F_B_, F_C_, F_D_)	01/2000	→	05/2006
TRANSIT Pianale piatto/Telaio (FM_ _, FN_ _) 2.4 TDCi	03/2004	→	05/2006
TRANSIT Pianale piatto/Telaio (FM_ _, FN_ _) 2.4 TDdi	08/2000	→	08/2003
TRANSIT Pianale piatto/Telaio (FM_ _, FN_ _) 2.4 TDE	07/2001	→	05/2006
063380008010 MAN8008 124A 12V			
TOURNEO CONNECT 1.8 16V	06/2002	→	
TRANSIT CONNECT (P65_, P70_, P80_) 1.8 16V	06/2002	→	
063380009010 MAN8009 124A 12V			
TOURNEO CONNECT 1.8 Di	06/2002	→	
TOURNEO CONNECT 1.8 TDCi	08/2006	→	
TOURNEO CONNECT 1.8 Turbo Di	06/2002	→	
TRANSIT CONNECT (P65_, P70_, P80_) 1.8 Di	06/2002	→	
TRANSIT CONNECT (P65_, P70_, P80_) 1.8 TDCi	06/2002	→	
TRANSIT CONNECT (P65_, P70_, P80_) 1.8 TDCi	08/2006	→	
063380010010 MAN8010 124A 12V			
FOCUS (DAW, DBW) 1.8 DI / TDDi	08/1999	→	11/2004
FOCUS (DAW, DBW) 1.8 Turbo DI / TDDi	10/1998	→	11/2004
FOCUS Tre volumi (DFW) 1.8 Turbo DI / TDDi	02/1999	→	03/2005
TOURNEO CONNECT 1.8 Turbo Di	06/2002	→	
TRANSIT CONNECT (P65_, P70_, P80_) 1.8 TDCi	06/2002	→	
063388502010 MAN885 75A 12V			
TOURNEO CONNECT 1.8 16V	09/2002	→	
063388505010 MAN966 80A 12V			
CITROEN			
JUMPER Autobus (230P) 2.8 D	01/1999	→	02/2002
JUMPER Furgonato (230L) 2.8 D	01/1999	→	02/2002
JUMPER Pianale piatto/Telaio (230) 2.8 D	01/1999	→	02/2002

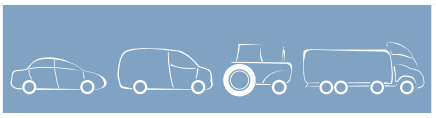


063388505010 MAN966 80A 12V

FIAT	
DUCATO Autobus (230) 2.5 D Combinato	08/1994 → 03/1998
DUCATO Autobus (230) 2.5 TD	06/1994 → 03/1998
DUCATO Autobus (230) 2.5 TDI 4x4	04/1997 → 04/2002
DUCATO Autobus (230) 2.5 TDI Combinato	08/1994 → 03/1998
DUCATO Autobus (230) 2.5 TDI Panorama/ Combinato	03/1994 → 03/1998
DUCATO Autobus (230) 2.8 D	02/1998 → 04/2002
DUCATO Autobus (230) 2.8 TDI	10/1997 → 03/2002
DUCATO Furgonato (230L) 2.5 D	03/1994 → 03/1998
DUCATO Furgonato (230L) 2.5 TD	06/1994 → 03/1998
DUCATO Furgonato (230L) 2.5 TDI	03/1994 → 03/1998
DUCATO Furgonato (230L) 2.5 TDI Maxi	03/1994 → 03/1998
DUCATO Furgonato (230L) 2.8 D	05/1998 → 04/2002
DUCATO Furgonato (230L) 2.8 iDTD 4x4	05/1998 → 09/2001
DUCATO Furgonato (230L) 2.8 TDI	10/1997 → 03/2002
DUCATO Pianale piatto/Telaio (230) 2.5 D	03/1994 → 04/2002
DUCATO Pianale piatto/Telaio (230) 2.5 TD	06/1994 → 04/1998
DUCATO Pianale piatto/Telaio (230) 2.5 TDI	03/1994 → 04/2002
DUCATO Pianale piatto/Telaio (230) 2.8 D	02/1998 → 04/2002
DUCATO Pianale piatto/Telaio (230) 2.8 iDTD 4x4	05/1998 → 09/2001
DUCATO Pianale piatto/Telaio (230) 2.8 TDI	12/1998 → 03/2002
PEUGEOT	
BOXER Autobus (230P) 2.8 D	01/1999 → 02/2002
BOXER Autobus (230P) 2.8 DTiC	10/1999 → 09/2000
BOXER Autobus (230P) 2.8 HDI	11/2000 → 04/2002
BOXER Furgonato (230L) 2.5 DT	01/1999 → 11/2001
BOXER Furgonato (230L) 2.8 D	01/1999 → 02/2002
BOXER Furgonato (230L) 2.8 DTiC	10/1999 → 09/2000
BOXER Furgonato (230L) 2.8 HDI	11/2000 → 04/2002
BOXER Pianale piatto/Telaio (ZCT_) 2.8 D	01/1999 → 02/2002

063531446220 MAN2033 55A 12V

NISSAN	
TRADE Furgonato 2.0 D	11/1986 → 10/1998
TRADE Pianale piatto/Telaio 2.0 D	11/1986 → 03/1993
TRADE Pianale piatto/Telaio 2.8 D	06/1989 → 06/1994
TRADE Pianale piatto/Telaio 3.0	01/1994 → 12/1998

063532250200 MAN2027 85A 12V

SMART	
CABRIO 0.8 CDI (S1OLC1)	03/2001 → 01/2004
CITY-COUPE (MC01) 0.8 CDI (S1CLC1)	11/1999 → 01/2004
FORTWO Cabrio 0.8 CDI (450.400)	02/2004 → 03/2007
FORTWO Coupe 0.8 CDI (450.300)	02/2004 → 03/2007

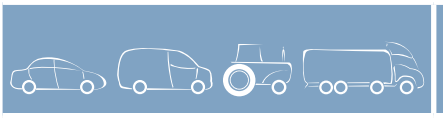


063532250220 MAN2036 70A 12V

OPEL	
AGILA (H00) 1.0	08/2003 → 02/2008
AGILA (H00) 1.0 12V	09/2000 → 08/2003
AGILA (H00) 1.2 16V	09/2000 → 06/2004
AGILA (H00) 1.2 16V Twinport	07/2004 → 02/2008
ASTRA G 2 volumi /Coda spiovente (F48_, F08_) 1.2 16V	02/1998 → 09/2003
ASTRA G Station wagon (F35_) 1.2 16V	02/1998 → 09/2003
ASTRA G Tre volumi (F69_) 1.2 16V	09/1998 → 09/2003
CORSA C (F08, F68) 1.0	09/2000 → 08/2003
CORSA C (F08, F68) 1.2	09/2000 → 06/2004
CORSA C Furgonato (F08, W5L) 1.2 16V	09/2000 → 06/2004
VAUXHALL	
AGILA Mk I (A) 1.0 12V	09/2000 → 02/2008
AGILA Mk I (A) 1.2 16V	09/2000 → 06/2004
AGILA Mk I (A) 1.2 16V Twinport	07/2004 → 02/2008
ASTRA Mk IV (G) 1.2 16V	09/1998 → 08/2005
ASTRA Mk IV (G) 2 volumi /Coda spiovente 1.2 16V	02/1998 → 08/2005
ASTRA Mk IV (G) Station wagon 1.2 16V	02/1998 → 08/2005
CORSA Mk III (C) 1.0 12V	09/2000 → 08/2003
CORSA Mk III (C) 1.2 16V	09/2000 → 08/2004
CORSA Mk III (C) 1.2 16V Dualfuel	08/2001 → 08/2004
CORSAVAN Mk III (C) 1.2 16V	09/2000 → 08/2004
CORSAVAN Mk III (C) 1.2 16V Dualfuel	08/2001 → 08/2004

063532601010 MAN2601 110A 12V

HYUNDAI	
TERRACAN (HP) 2.9 CRDi 4WD	12/2001 →
KIA	
CARNIVAL II (GQ) 2.9 CRDi	10/2001 →

063532602010 MAN2602 90A 12V

HYUNDAI	
ACCENT II (LC) 1.3	01/2000 →
ACCENT II (LC) 1.5	01/2000 →
ACCENT Tre volumi (LC) 1.3	01/2000 → 11/2005
ACCENT Tre volumi (LC) 1.5	01/2000 → 11/2005
ELANTRA (XD) 1.6	06/2000 →
ELANTRA (XD) 1.8	06/2000 →
ELANTRA Tre volumi (XD) 1.6	06/2000 →
ELANTRA Tre volumi (XD) 1.8	06/2000 →
GETZ (TB) 1.3	09/2003 →
GETZ (TB) 1.6	04/2003 →




063532602010 MAN2602 90A 12V	
HYUNDAI	
MATRIX (FC) 1.6	06/2001 →
MATRIX (FC) 1.8	06/2001 →
TRAJET (FO) 2.0	03/2000 →
TUCSON (JM) 2.0	08/2004 →
063532602010 MAN2602 90A 12V	
KIA	
CERATO (LD) 1.6	07/2004 →
SPORTAGE (JE_) 2.0 16V 4WD	09/2004 →
SPORTAGE (JE_) 2.0 i 16V	09/2004 →
063532603010 MAN2603 75A 12V	
HYUNDAI	
H100 Autobus (P) 2.5 D	07/1993 → 03/2000
H100 Autobus (P) 2.5 TD	07/1993 → 03/2000
H100 Autobus (P) 2.6 D	10/1999 →
H100 Furgonato 2.5 D	07/1993 → 03/2000
H100 Furgonato 2.6 D	10/1999 →
063532604010 MAN2604 65A 12V	
HYUNDAI	
H100 Autobus (P) 2.5 D	12/1994 → 03/2000
H100 Furgonato 2.5 D	12/1994 → 03/2000
063532605010 MAN2605 65A 12V	
HYUNDAI	
H100 Autobus (P) 2.5 D	07/1993 → 12/1994
H100 Autobus (P) 2.5 TD	07/1993 → 03/2000
H100 Furgonato 2.5 D	07/1993 → 03/2000
063532606010 MAN2606 90A 12V	
HYUNDAI	
GALLOPER II (JK-01) 2.5 TD	08/1998 → 11/2000
GALLOPER II (JK-01) 2.5 TD intercooler	08/1998 →
MITSUBISHI	
GALLOPER (JK-01) 2.5 TD intercooler	02/1999 →
063532607010 MAN2607 80A 12V	
KIA	
RIO (DC_) 1.3	09/2000 → 02/2005
RIO (DC_) 1.5 16V	09/2000 → 02/2005
RIO Station wagon (DC) 1.3	08/2000 → 02/2005
RIO Station wagon (DC) 1.5 16V	09/2002 → 02/2005
SHUMA (FB) 1.5 i 16V	10/1997 → 03/2001
SHUMA (FB) 1.8 i 16V	10/1997 → 03/2001
SHUMA II (FB) 1.6	05/2001 → 08/2004
SHUMA II (FB) 1.8	04/2003 → 08/2004
SHUMA II Tre volumi (FB) 1.6	05/2001 → 05/2004
SHUMA Tre volumi (FB) 1.5	03/1996 → 12/1998
SHUMA Tre volumi (FB) 1.5 i 16V	10/1997 → 10/2001
SHUMA Tre volumi (FB) 1.8 GX	05/1999 → 10/2001




063532608010 MAN2608 110A 12V	
HYUNDAI	
H-1 Autobus (KMF) 2.5 D	10/1997 →
H-1 Autobus (KMF) 2.5 TD	10/1997 →
H-1 Furgonato 2.5 TD	03/2000 → 09/2000
STAREX (H1) 2.5 TCi	10/1997 → 04/2004
STAREX (H1) 2.5 TD	06/1997 →
063532609010 MAN2609 75A 12V	
HYUNDAI	
H-1 Autobus (KMF) 2.5 D	10/1997 →
H-1 Autobus (KMF) 2.5 TD	10/1997 → 11/2001
H-1 Autobus (KMF) 2.5 TD	11/2001 →
H-1 Autobus (KMF) 2.5 TD 4WD	03/2001 →
H-1 Furgonato 2.5 TD	03/2000 → 09/2000
H-1 Furgonato 2.5 TD	10/2001 →
H-1 Pianale piatto/Telaio 2.5 D	06/2000 → 10/2005
STAREX (H1) 2.5 TCi	10/1997 → 04/2004
STAREX (H1) 2.5 TD	06/1997 →
063532608010 MAN2608 110A 12V	
MITSUBISHI	
L 300 Autobus (P0_W, P1_W, P2_W) 2.5 D (P25V, P05W, P05V, P15V, P15T)	11/1986 →
L 300 Autobus (P0_W, P1_W, P2_W) 2.5 TD 4WD (P25W, P25V)	11/1988 →
L 300 Furgonato (P0_W, P1_W) 2.5 D (P05V, P05W, P15V)	11/1986 →
L 300 Pianale piatto/Telaio (P1_T) 2.5 D (P15T)	11/1994 →
L 400 Autobus (PAOV) 2500 TD	06/1996 →
L 400 Furgonato (PAOV) 2500 TD (PD5W, PD5V, PA5W, PA5V)	09/1996 →
SPACE GEAR (PA/B/D_V/W) 2.5 TD (PA5V/W, PB5V)	05/1995 → 05/2000
063532610010 MAN2610 70A 12V	
KIA	
RETONA (CE) 2.0 16V	05/2000 →
SEPHIA (FA) 1.5 i	02/1996 →
SEPHIA (FA) 1.6 i	01/1995 →
SEPHIA Tre volumi (FA) 1.5 i	02/1996 → 10/1997
SPORTAGE (K00) 2.0	10/2000 → 08/2003
SPORTAGE (K00) 2.0 i 16V	10/1999 → 08/2003
SPORTAGE (K00) 2.0 i 4WD	04/1994 → 08/1999




063532611010 MAN2611 90A 12V

HYUNDAI	
ACCENT I (X-3) 1.3	10/1994 → 01/2000
ACCENT I (X-3) 1.3 i 12V	10/1994 → 01/2000
ACCENT I (X-3) 1.5 i 16V	12/1995 → 01/2000
ACCENT Tre volumi (X-3) 1.3	10/1994 → 01/2000
ACCENT Tre volumi (X-3) 1.3 i 12V	10/1994 → 01/2000
ACCENT Tre volumi (X-3) 1.5 i 16V	10/1995 → 01/2000
COUPE (RD) 1.6 16V	03/1998 → 04/2002
COUPE (RD) 1.6 i 16V	12/1996 → 04/2002
COUPE (RD) 2.0 16V	08/1996 → 04/2002
LANTRA II (J-2) 1.5 12V	12/1996 → 09/2000
LANTRA II (J-2) 1.6 16V	11/1995 → 09/2000
LANTRA II (J-2) 1.6 i	11/1995 → 09/2000
LANTRA II (J-2) 1.8 16V	11/1995 → 09/2000
LANTRA II (J-2) 2.0 16V	08/1996 → 09/2000
LANTRA II Wagon (J-2) 1.6 16V	02/1996 →
LANTRA II Wagon (J-2) 1.6 i	02/1996 →
LANTRA II Wagon (J-2) 1.8 16V	02/1996 →
LANTRA II Wagon (J-2) 2.0 16V	12/1996 →

063532612010 MAN2612 70A 12V

GEELY	
MR 2 volumi /Coda spiovente 1.5	09/2005 →
HYUNDAI	
ATOS (MX) 1.0 i	03/2001 →
ATOS (MX) 1.1	03/2004 →
ATOS PRIME (MX) 1.0 i	08/1999 →
ATOS PRIME (MX) 1.1	06/2003 →
GETZ (TB) 1.1	09/2002 →

063532613010 MAN2613 60A 12V

HYUNDAI	
ATOS (MX) 1.0 i	02/1998 → 09/2001
ATOS PRIME (MX) 1.0 i	08/1999 → 09/2001

063532614010 MAN2614 75A 12V

FORD	
ESCORT '86 Express (AVF) 1.8 D	07/1988 → 07/1990
ESCORT '91 Express (AVL) 1.8 D	07/1990 → 12/1994
ESCORT '95 Furgonato (AVL) 1.8 D	01/1995 →
ESCORT '95 Furgonato (AVL) 1.8 Turbo D	12/1995 → 06/2001
ESCORT CLASSIC (AAL, ABL) 1.8 TD	10/1998 → 07/2000
ESCORT CLASSIC Turnier (ANL) 1.8 TD	02/1999 → 07/2000
ESCORT IV (GAF, AWF, ABFT) 1.8 D	01/1989 → 07/1990
ESCORT IV Station wagon (AWF, AVF) 1.8 D	01/1989 → 07/1990
ESCORT V (GAL) 1.8 D	07/1990 → 12/1992
ESCORT V Station wagon (GAL, AVL) 1.8 D	07/1990 → 12/1992

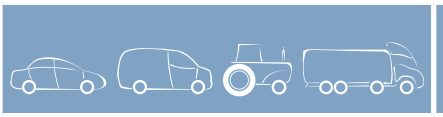


063532614010 MAN2614 75A 12V

FORD	
ESCORT VI (GAL) 1.8 D	09/1992 → 01/1995
ESCORT VI Tre volumi (GAL) 1.8 D	08/1993 → 01/1995
ESCORT VII (GAL, AAL, ABL) 1.8 D	01/1995 → 12/1996
ESCORT VII Station wagon (GAL, ANL) 1.8 D	01/1995 → 02/1999
ESCORT VII Tre volumi (GAL, AFL) 1.8 D	01/1995 → 12/1996
FIESTA Furgonato (FVD) 1.8 D (FVJ)	03/1989 → 12/1995
ORION II (AFF) 1.8 D	01/1989 → 07/1990
ORION III (GAL) 1.8 D	11/1990 → 12/1993
HYUNDAI	
ACCENT I (X-3) 1.3	10/1994 → 01/2000
ACCENT I (X-3) 1.5 i 12V	10/1994 → 01/2000

063532614010 MAN2614 75A 12V

HYUNDAI	
LANTRA II (J-2) 1.5 12V	12/1996 → 09/2000
S COUPE (SLC) 1.5 i Turbo	04/1991 → 05/1996
ROVER	
200 (XH) 216	03/1985 → 09/1989
200 2 volumi /Coda spiovente (XW) 216 GSi	10/1989 → 10/1995
200 Coupe (XW) 216	10/1992 → 06/1999
MAESTRO 1.6	09/1990 → 01/1995

063532615010 MAN2615 75A 12V

HYUNDAI	
LANTRA I (J-1) 1.6 i.e. 16V	10/1990 → 11/1995
LANTRA I (J-1) 1.8 i.e. 16V	10/1990 → 11/1995
SANTAMO 2.0 16V	05/1999 →
SONATA III (Y-3) 1.8 i	05/1993 → 06/1998
SONATA III (Y-3) 2.0 i	06/1994 → 06/1998
SONATA III (Y-3) 2.0 i 16V	05/1993 → 06/1998
MITSUBISHI	
COLT III (C5_A) 1.6 GTi 16V (C53A)	04/1988 → 05/1990
COLT III (C5_A) 1.8 GTi 16V (C58A) Cat.	06/1990 → 05/1992
GALANT IV (E3_A) 2.0 (E39A, E38A, E33A)	04/1989 → 10/1992
GALANT IV (E3_A) 2.0 GTI 16V (E39A, E38A, E33A)	11/1988 → 10/1992
GALANT IV Tre volumi (E3_A) 2.0 (E39A, E38A, E33A)	11/1987 → 10/1992
GALANT IV Tre volumi (E3_A) 2.0 GTi 16V (E39A, E38A, E33A)	11/1987 → 10/1992
LANCER IV (C6_A, C7_A) 1.8 GTi 16V (C68A)	11/1989 → 05/1992
SANTAMO 2.0 16V	05/1999 →




063532616010	MAN2616	110A	12V	
KIA				
CARNIVAL (UP) 2.5 V6		08/1999	→	10/2001
CARNIVAL II (GQ) 2.5 V6		10/2001	→	
JOICE 2.0		02/2000	→	
063532617010	**MAN2617**	**85A**	**12V**	
KIA				
CARNIVAL (UP) 2.9 TD		08/1999	→	10/2001
063532618010	**MAN2618**	**120A**	**12V**	
HYUNDAI				
TERRACAN (HP) 3.5 i V6 4WD		02/2004	→	
063532619010	**MAN2619**	**50A**	**12V**	
KIA				
PRIDE (DA) 1.3 16V		01/1990	→	
PRIDE (DA) 1.3 i		01/1990	→	
PRIDE Station wagon 1.3		08/1999	→	
063532620010	**MAN2620**	**65A**	**12V**	
DAEWOO				
MATIZ (KLYA) 0.8		09/1998	→	
063532621010	**MAN2621**	**60A**	**12V**	
KIA				
SPORTAGE (K00) 2.0 TD 4WD		09/2000	→	08/2003
063532611010	**MAN2611**	**90A**	**12V**	
HYUNDAI				
ELANTRA (XD) 2.0 CRDi		04/2001	→	
ELANTRA Tre volumi (XD) 2.0 CRDi		04/2001	→	
SANTA FE (SM) 2.0 CRDi		08/2001	→	
TRAJET (FO) 2.0 CRDi		04/2001	→	
TUCSON (JM) 2.0 CRDi		08/2004	→	
KIA				
CARENS II (FJ) 2.0 CRDi		02/2003	→	
CERATO (LD) 2.0 CRDi		03/2005	→	
CERATO Tre volumi (LD) 2.0 CRDi		03/2005	→	
SPORTAGE (JE_) 2.0 CRDi		02/2005	→	
063532623010	**MAN2623**	**90A**	**12V**	
HYUNDAI				
LANTRA I (J-1) 1.6 i.e. 16V		10/1990	→	11/1995
LANTRA I (J-1) 1.8 i.e. 16V		10/1990	→	11/1995
SANTAMO 2.0 16V		05/1999	→	
SONATA II (Y-2) 2.0 i 16V		01/1991	→	10/1993
SONATA II (Y-2) 3.0 i V6		01/1991	→	10/1993
SONATA III (Y-3) 1.8 i		05/1993	→	06/1998
SONATA III (Y-3) 2.0 i		06/1994	→	08/1996
SONATA III (Y-3) 2.0 i 16V		05/1993	→	06/1998
SONATA VI (YF) 2.0 16V		10/2001	→	11/2004




063532623010	MAN2623	90A	12V	
KIA				
JOICE 2.0		02/2000	→	11/2000
JOICE 2.0		09/2001	→	
MITSUBISHI				
COLT III (C5_A) 1.6 GTi 16V (C53A)		04/1988	→	05/1990
COLT III (C5_A) 1.8 GTi 16V (C58A) Cat.		06/1990	→	05/1992
GALANT IV (E3_A) 2.0 (E39A, E38A, E33A)		04/1989	→	10/1992
GALANT IV (E3_A) 2.0 GTI 16V (E39A, E38A, E33A)		11/1988	→	10/1992
GALANT IV Tre volumi (E3_A) 2.0 (E39A, E38A, E33A)		11/1987	→	10/1992
GALANT IV Tre volumi (E3_A) 2.0 GTi 16V (E39A, E38A, E33A)		11/1987	→	10/1992
GALANT V (E5_A, E7_A, E8_A) 2.0 GLSI 4x4 (E55A, E75A)		11/1992	→	08/1996
GALANT V Tre volumi (E5_A, E7_A, E8_A) 2.0 GLSI 4x4 (E55A, E75A)		11/1992	→	08/1996
LANCER IV (C6_A, C7_A) 1.6 GTi (C63A)		05/1988	→	05/1990
LANCER IV (C6_A, C7_A) 1.8 GTi 16V (C68A)		11/1989	→	05/1992
LANCER IV Tre volumi (C6_A) 1.6 GTi		05/1988	→	05/1990
SANTAMO 2.0 16V		05/1999	→	
063532624010	**MAN2624**	**110A**	**12V**	
HYUNDAI				
TERRACAN (HP) 2.9 CRDi 4WD		11/2003	→	
063532625010	**MAN2625**	**65A**	**12V**	
HYUNDAI				
GALLOPER II (JK-01) 2.5 TD		08/1998	→	10/2000
063532626010	**MAN2626**	**90A**	**12V**	
KIA				
CARENS II (FJ) 1.6		04/2003	→	
063532627010	**MAN2627**	**110A**	**12V**	
KIA				
SORENTO (JC) 2.5 CRDi		08/2002	→	
063532628010	**MAN2628**	**70A**	**12V**	
KIA				
PICANTO (BA) 1.0		09/2005	→	
PICANTO (BA) 1.1		04/2004	→	
063532629010	**MAN2629**	**65A**	**12V**	
DAEWOO				
MATIZ (KLYA) 1.0		10/2004	→	




063532630010 MAN2630 85A 12V		
CHEVROLET		
AVEO Tre volumi (T200, T250) 1.4	03/2006 →	
KALOS 1.2	03/2005 →	
KALOS 1.4	03/2005 →	
KALOS 1.4 16V	03/2005 →	
KALOS Tre volumi 1.4 16V	03/2005 →	
LACETTI 1.4 16V	03/2005 →	
DAEWOO		
KALOS (KLAS) 1.2	04/2003 →	
KALOS (KLAS) 1.4	09/2002 →	
KALOS (KLAS) 1.4 16V	04/2003 →	
NUBIRA Tre volumi (KLAN) 1.6	09/2004 →	
063532631010 MAN2631 95A 12V		
DAEWOO		
EVANDA (KLAL) 2.0	08/2002 →	
LEGANZA (KLAV) 2.0 16V	06/1997 →	12/2002
REZZO (KLAU) 2.0	09/2000 →	
063532632010 MAN2632 95A 12V		
DAEWOO		
REZZO (KLAU) 1.8	09/2000 →	
063532633010 MAN2633 85A 12V		
CHEVROLET		
REZZO 1.6	03/2005 →	
DAEWOO		
NUBIRA Tre volumi (KLAJ) 1.6 16V	07/2000 →	
063532633010 MAN2633 85A 12V		
DAEWOO		
REZZO (KLAU) 1.6	09/2000 →	
REZZO (KLAU) 1.8	09/2000 →	
063532634010 MAN2634 85A 12V		
DAEWOO		
ESPERO (KLEJ) 1.8	02/1995 →	09/1999
ESPERO (KLEJ) 2.0	02/1995 →	06/1999
063532635010 MAN2635 85A 12V		
DAEWOO		
ESPERO (KLEJ) 1.5 16V	02/1995 →	06/1999
NEXIA (KLETN) 1.5	02/1995 →	08/1997
NEXIA (KLETN) 1.5 16V	02/1995 →	08/1997
NEXIA Tre volumi (KLETN) 1.5	02/1995 →	08/1997
NEXIA Tre volumi (KLETN) 1.5 16V	02/1995 →	08/1997
063532636010 MAN2636 85A 12V		
DAEWOO		
LANOS (KLAT) 1.4	05/1997 →	
LANOS (KLAT) 1.5	05/1997 →	
LANOS (KLAT) 1.6 16V	05/1997 →	

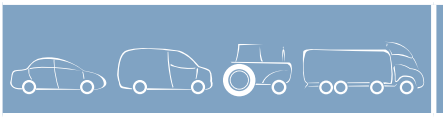


063532636010 MAN2636 85A 12V		
DAEWOO		
LANOS Tre volumi (KLAT) 1.4	05/1997 →	
LANOS Tre volumi (KLAT) 1.5	05/1997 →	
LANOS Tre volumi (KLAT) 1.6 16V	05/1997 →	
063532637010 MAN2637 85A 12V		
CHEVROLET		
REZZO 2.0	03/2005 →	
DAEWOO		
LEGANZA (KLAV) 2.0 16V	06/1997 →	12/2002
NUBIRA (KLAJ) 2.0 16V	05/1997 →	
NUBIRA Tre volumi (KLAJ) 2.0	06/1999 →	07/2003
NUBIRA Tre volumi (KLAJ) 2.0 16V	05/1997 →	
NUBIRA Tre volumi (KLAN) 1.8	07/2003 →	
NUBIRA Wagon (KLAJ) 2.0 16V	05/1997 →	
REZZO (KLAU) 1.8	09/2000 →	
REZZO (KLAU) 2.0	09/2001 →	
063533100530 MAN2021 70A 12V		
FORD		
ESCORT '95 Furgonato (AVL) 1.4	01/1995 →	09/2001
ESCORT CLASSIC (AAL, ABL) 1.6 16V	10/1998 →	07/2000
ESCORT CLASSIC Turnier (ANL) 1.6 16V	02/1999 →	07/2000
ESCORT VII (GAL, AAL, ABL) 1.4	01/1995 →	10/1998
ESCORT VII (GAL, AAL, ABL) 1.6 16V	01/1995 →	10/1998
ESCORT VII (GAL, AAL, ABL) 1.6 i 16V	01/1995 →	08/1995
ESCORT VII (GAL, AAL, ABL) 1.8 16V	01/1995 →	10/1998
ESCORT VII Cabriolet (ALL) 1.4	02/1995 →	08/1998
ESCORT VII Cabriolet (ALL) 1.6 16V XR3i	02/1995 →	09/1999
ESCORT VII Cabriolet (ALL) 1.8 16V XR3i	02/1995 →	08/1998
ESCORT VII Station wagon (GAL, ANL) 1.4	01/1995 →	02/1999
ESCORT VII Station wagon (GAL, ANL) 1.6 16V	01/1995 →	02/1999
ESCORT VII Station wagon (GAL, ANL) 1.6 i 16V	01/1995 →	08/1995
ESCORT VII Station wagon (GAL, ANL) 1.8 16V	09/1995 →	02/1999
ESCORT VII Tre volumi (GAL, AFL) 1.4	01/1995 →	02/1999
ESCORT VII Tre volumi (GAL, AFL) 1.6 i 16V	01/1995 →	02/1999
ESCORT VII Tre volumi (GAL, AFL) 1.8 16V	09/1995 →	02/1999
063533100540 MAN2022 70A 12V		
FORD		
FIESTA Furgonato (J5_, J3_) 1.3	02/1996 →	
FIESTA IV (JA_, JB_) 1.3 i	11/1995 →	01/2002
KA (RB_) 1.3 i	09/1996 →	10/2002



063533155000 MAN2023 90A 12V

IVECO

DAILY I Autobus A 40-10 (94139111, 94139131, 94139311, 94139315, 94139317, ..)	01/1991 → 05/1999
DAILY I Autobus A 40-12 (95819311, 95819315, 95819317, 95819331)	05/1996 → 05/1999
DAILY I Autobus A 45-10 (95739111, 95739131, 95739311, 95739317, 95739331)	05/1996 → 05/1999
DAILY I Autobus A 45-12 (95839211, 95839231, 95839311, 95839317, 95839331, ..)	05/1996 → 05/1999
DAILY I Cassone / Furgonato / Promiscuo 30-10	01/1997 → 05/1999
DAILY I Cassone / Furgonato / Promiscuo 30-10 C	01/1997 → 05/1999
DAILY I Cassone / Furgonato / Promiscuo 30-8 (14914111, 14914117, 14914211, 14914217, 14915111, 1491..)	09/1998 → 05/1999
DAILY I Cassone / Furgonato / Promiscuo 30-8 V (14914111, 14914117, 14914211, 14914217, 14915111, 14..)	09/1998 → 05/1999
DAILY I Cassone / Furgonato / Promiscuo 35-10 (15034111, 15034204, 15034211, 15034215, 15034217, 150..)	05/1996 → 05/1999
DAILY I Cassone / Furgonato / Promiscuo 35-8 (14934104, 14934111, 14934204, 14934205, 14934211, 1493..)	09/1998 → 05/1999
DAILY I Cassone / Furgonato / Promiscuo 49-12 V (15154204, 15154211, 15154215, 15154217, 15154404, ..)	05/1996 → 05/1999
DAILY I Cassone / Furgonato / Promiscuo 59-12 V (15174404, 15174411, 15174415, 15174417)	05/1996 → 05/1996
DAILY I Pianale piatto/Telaio 30-10	01/1998 → 05/1999
DAILY I Pianale piatto/Telaio 30-8 (10011131, 10011132, 10011231, 10011232, 10011237, 1001..)	09/1998 → 05/1999
DAILY I Pianale piatto/Telaio 35-10 (15030111, 15030211, 15030311, 15031111, 15031117, 150..)	01/1996 → 05/1999
DAILY I Pianale piatto/Telaio 35-12 (15130311, 15130411, 15131111, 15131204, 15131211, 151..)	05/1996 → 05/1999
DAILY I Pianale piatto/Telaio 35-8 (14930304, 14931104, 14931111, 14931115, 14931204, 1493..)	09/1998 → 05/1999



063533155000 MAN2023 90A 12V

IVECO

DAILY I Pianale piatto/Telaio 49-10 (13050211, 13050231, 13050304, 13050311, 13050331, 130..)	01/1989 → 05/1999
DAILY I Pianale piatto/Telaio 49-12 (15150211, 15150311, 15150404, 15150411, 15151204, 151..)	05/1996 → 05/1999
DAILY I Pianale piatto/Telaio 59-12 (15170211, 15170304, 15170311, 15170504, 15170511, 151..)	05/1996 → 05/1999
DAILY I Ribaltabile 35-10 K (15030111, 15030211, 15030311, 15031111, 15031117, ..)	01/1997 → 05/1999
DAILY I Ribaltabile 35-12 K (15130311, 15130411, 15131111, 15131204, 15131211, ..)	09/1996 → 08/1998
DAILY I Ribaltabile 35-8 K (14930304, 14931104, 14931111, 14931115, 14931204, 14..)	09/1998 → 05/1999
DAILY I Ribaltabile 49-10 K (15056204, 15056211, 15056304, 15056311)	05/1996 → 05/1999
DAILY I Ribaltabile 49-12 K	05/1996 → 05/1999
DAILY I Ribaltabile 59-12 K (13156211, 13156212, 13156231, 13156311, 13156312, 1..)	05/1991 → 05/1999

063533200010 MAN2001 90A 12V

IVECO

DAILY II Cassone / Furgonato / Promiscuo 29 L 11 V	05/1999 → 09/2002
DAILY II Cassone / Furgonato / Promiscuo 29 L 13	05/2001 → 03/2006
DAILY II Cassone / Furgonato / Promiscuo 29 L 9 V	05/1999 → 09/2002
DAILY II Cassone / Furgonato / Promiscuo 35 S 11 V,35 C 11 V	05/1999 → 12/2001
DAILY II Cassone / Furgonato / Promiscuo 35 S 13 V,35 C 13 V	05/1999 → 03/2006
DAILY II Cassone / Furgonato / Promiscuo 35 S 15 V, 35 C 15 V (A6HCV3B2, A6HBV4B2, A6HC41B2, A6HC42B2)	11/2002 → 03/2006
DAILY II Cassone / Furgonato / Promiscuo 35 S 9 V	11/2001 → 03/2006
DAILY II Cassone / Furgonato / Promiscuo 35 S 9 V,35 C 9 V	05/1999 → 09/2002
DAILY II Cassone / Furgonato / Promiscuo 40 C 13	01/2001 → 09/2004
DAILY II Cassone / Furgonato / Promiscuo 40 C 15	04/2003 → 09/2004
DAILY II Cassone / Furgonato / Promiscuo 50 C 11	05/1999 → 09/2004

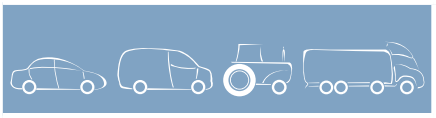


063533200010 MAN2001 90A 12V	
IVECO	
DAILY II Cassone / Furgonato / Promiscuo 50 C 13	05/1999 → 09/2004
DAILY II Cassone / Furgonato / Promiscuo 50 C 15	05/2001 → 09/2004
DAILY II Cassone / Furgonato / Promiscuo 65 C 15	11/2001 → 09/2004
DAILY II Pianale piatto/Telaio 29 L 11	05/1999 → 12/2001
DAILY II Pianale piatto/Telaio 29 L 13	11/2001 → 03/2006
DAILY II Pianale piatto/Telaio 29 L 9	05/1999 → 09/2002
DAILY II Pianale piatto/Telaio 35 C 15	11/2001 → 03/2006
DAILY II Pianale piatto/Telaio 35 C 9, 35 S 9	11/2001 → 03/2006
DAILY II Pianale piatto/Telaio 35 S 11,35 C 11	05/1999 → 12/2001
DAILY II Pianale piatto/Telaio 35 S 13,35 C 13	05/1999 → 03/2006
DAILY II Pianale piatto/Telaio 35 S 9,35 C 9	05/1999 → 09/2002
DAILY II Pianale piatto/Telaio 40 C 13	01/2001 → 09/2004
DAILY II Pianale piatto/Telaio 40 C 15	04/2003 → 09/2004
DAILY II Pianale piatto/Telaio 50 C 11	05/1999 → 09/2004
DAILY II Pianale piatto/Telaio 50 C 13	05/1999 → 09/2004
DAILY II Pianale piatto/Telaio 50 C 15	05/2001 → 09/2004
DAILY II Pianale piatto/Telaio 65 C 15	11/2001 → 09/2004
063533250010 MAN2037 90A 12V	
AUDI	
A3 (8L1) 1.9 TDI	05/1998 → 06/2003
A3 (8L1) 1.9 TDI quattro	08/2000 → 06/2003
FORD	
GALAXY (WGR) 1.9 TDI	06/1999 → 01/2005
SEAT	
ALHAMBRA (7V8, 7V9) 1.8 T 20V	03/1999 → 02/2000
ALHAMBRA (7V8, 7V9) 1.9 TDI	03/1999 → 03/2010
ALHAMBRA (7V8, 7V9) 1.9 TDI 4motion	06/2000 → 03/2010
CORDOBA 1.9 D	05/1999 → 09/2002
CORDOBA (6L2) 1.9 SDI	09/2002 → 12/2005
CORDOBA (6L2) 1.9 TDI	09/2002 →
CORDOBA 2 volumi /Coda spiovente (6K2) 1.9 SDI	06/1999 → 08/2002
CORDOBA 2 volumi /Coda spiovente (6K2) 1.9 TDI	06/1999 → 10/2002
063533250010 MAN2037 90A 12V	
SEAT	
CORDOBA Vario (6K5) 1.9 SDI	06/1999 → 08/2002
CORDOBA Vario (6K5) 1.9 TDI	06/1999 → 08/2002
IBIZA III (6K1) 1.9 SDI	08/1999 → 02/2002
IBIZA III (6K1) 1.9 TDI	08/1999 → 02/2002
IBIZA IV (6L1) 1.9 SDI	02/2002 → 12/2005

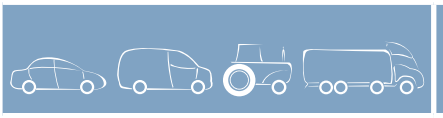


063533250010 MAN2037 90A 12V	
SEAT	
IBIZA IV (6L1) 1.9 TDI	02/2002 → 11/2009
IBIZA IV (6L1) 1.9 TDI Cupra R	03/2004 → 11/2005
IBIZA V (6J5) 1.9 TDI	03/2008 → 06/2010
IBIZA V SPORTCOUPE (6J1) 1.9 TDI	07/2008 → 06/2010
INCA (6K9) 1.9 SDI	09/2000 → 06/2003
LEON (1M1) 1.9 SDI	12/1999 → 10/2003
LEON (1M1) 1.9 TDI	11/1999 → 06/2006
LEON (1M1) 1.9 TDI Syncro	05/2002 → 07/2004
LEON (1M1) 2.8	05/2002 → 04/2004
LEON (1M1) 2.8 Cupra 4	02/2001 → 07/2001
TOLEDO II (1M2) 1.9 TDI	04/1999 → 07/2004
TOLEDO II (1M2) 2.3 V5	04/1999 → 11/2000
TOLEDO II (1M2) 2.3 V5 20V	05/2001 → 11/2003
SKODA	
FABIA 1.9 TDI	04/2007 → 03/2010
FABIA (6Y2) 1.9 SDI	12/1999 → 04/2007
FABIA (6Y2) 1.9 TDI	01/2000 → 04/2007
FABIA (6Y2) 1.9 TDI RS	06/2003 → 04/2007
FABIA Combi 1.9 TDI	10/2007 → 03/2010
FABIA Combi (6Y5) 1.9 SDI	08/2000 → 12/2007
FABIA Combi (6Y5) 1.9 TDI	08/2000 → 12/2007
FABIA Praktik 1.9 SDI	07/2001 → 12/2007
FABIA Tre volumi (6Y3) 1.9 SDI	11/1999 → 12/2007
FABIA Tre volumi (6Y3) 1.9 TDI	01/2000 → 12/2007
OCTAVIA (1U2) 1.9 SDI	06/1998 → 12/2003
OCTAVIA (1U2) 1.9 TDI	09/1996 → 03/2010
OCTAVIA Combi (1U5) 1.9 SDI	07/1998 → 12/2003
OCTAVIA Combi (1U5) 1.9 TDI	07/1998 → 03/2010
OCTAVIA Combi (1U5) 1.9 TDI 4x4	09/2000 → 01/2006
ROOMSTER (5J) 1.9 TDI	03/2006 → 03/2010
ROOMSTER (5J) 1.9 TDI	09/2006 → 03/2010
VW	
BORA (1J2) 1.9 SDI	10/1998 → 05/2005
BORA (1J2) 1.9 TDI	10/1998 → 05/2005
BORA (1J2) 1.9 TDI 4motion	02/1999 → 05/2005
BORA (1J2) 2.3 V5	10/1998 → 05/2005
BORA (1J2) 2.3 V5 4motion	01/1999 → 05/2005
BORA Station wagon (1J6) 1.9 TDI	05/2000 → 05/2005
BORA Station wagon (1J6) 1.9 TDI 4motion	01/2001 → 05/2005
BORA Station wagon (1J6) 2.3 V5	05/1999 → 05/2005
BORA Station wagon (1J6) 2.3 V5 4motion	05/2000 → 05/2005
BORA Station wagon (1J6) 2.8 V6 4motion	05/1999 → 05/2005
CADDY II Furgonato (9K9A) 1.9 SDI	09/2000 → 06/2003
CADDY II Furgonato (9K9A) 1.9 TDI	09/2000 → 06/2003





063533250010 MAN2037 90A 12V

VW			
CADDY II Station wagon (9K9B) 1.9 SDI	09/2000	→	06/2003
CADDY II Station wagon (9K9B) 1.9 TDI	09/2000	→	06/2003
GOLF IV (1J1) 1.9 SDI	05/1998	→	05/2004
GOLF IV (1J1) 1.9 TDI	05/1998	→	05/2004
GOLF IV (1J1) 1.9 TDI 4motion	07/1998	→	06/2005
GOLF IV (1J1) 2.3 V5	05/1998	→	05/2004
GOLF IV (1J1) 2.3 V5 4motion	12/1998	→	06/2005
GOLF IV (1J1) 2.8 V6 4motion	01/2000	→	04/2001
GOLF IV (1J1) 3.2 R32 4motion	09/2002	→	05/2004
GOLF IV Variant (1J5) 1.9 SDI	05/1999	→	06/2006
GOLF IV Variant (1J5) 1.9 TDI	05/1999	→	06/2006
GOLF IV Variant (1J5) 1.9 TDI 4motion	05/1999	→	06/2006
GOLF IV Variant (1J5) 2.3 V5	05/1999	→	06/2006
GOLF IV Variant (1J5) 2.3 V5 4motion	05/1999	→	06/2006
GOLF IV Variant (1J5) 2.8 V6 4motion	01/2000	→	04/2001
MULTIVAN V (7HM, 7HN, 7HF, 7EF, 7EM, 7EN) 1.9 TDI	04/2003	→	11/2009
NEW BEETLE (9C1, 1C1) 1.9 TDI	09/1998	→	12/2006
NEW BEETLE (9C1, 1C1) 2.3 V5	10/2000	→	06/2005
NEW BEETLE Cabriolet (1Y7) 1.9 TDI	06/2003	→	06/2005
NEW BEETLE Cabriolet (1Y7) 1.9 TDI	07/2005	→	
POLO (9N_) 1.9 SDI	10/2001	→	
POLO (9N_) 1.9 TDI	10/2001	→	
POLO CLASSIC (6KV2) 110 1.9 TDI	10/1999	→	09/2001
POLO CLASSIC (6KV2) 68 1.9 SDI	10/1999	→	09/2001
POLO CLASSIC (6KV2) 90 1.9 TDI	10/1999	→	09/2001
POLO Tre volumi 1.9 SDI	11/2003	→	
POLO Variant (6KV5) 1.9 SDI	10/1999	→	09/2001
POLO Variant (6KV5) 1.9 TDI	05/1997	→	09/2001
SHARAN (7M8, 7M9, 7M6) 1.8 T 20V	05/1999	→	02/2000
SHARAN (7M8, 7M9, 7M6) 1.9 TDI	03/1999	→	11/2008
SHARAN (7M8, 7M9, 7M6) 1.9 TDI 4motion	05/2000	→	03/2010
TRANSPORTER V Autobus (7HB, 7HJ, 7EB, 7EJ) 1.9 TDI	04/2003	→	11/2009
TRANSPORTER V Furgonato (7HA, 7HH, 7EA, 7EH) 1.9 TDI	04/2003	→	11/2009
TRANSPORTER V Pianale piatto/Telaio (7JD, 7JE, 7JL, 7JY, 7JZ..) 1.9 TDI	04/2003	→	11/2009

063533250130 MAN2038 90A 12V

SEAT			
ALHAMBRA (7V8, 7V9) 2.0 i	03/1999	→	02/2000
AROSA (6H) 1.0	01/1999	→	07/2000





063533250130 MAN2038 90A 12V

SEAT			
AROSA (6H) 1.4	01/1999	→	06/2004
AROSA (6H) 1.4 16V	01/2000	→	06/2004
CORDOBA 1.0	05/1999	→	09/2002
CORDOBA 1.4	05/1999	→	09/2002
CORDOBA (6L2) 1.4 16V	10/2002	→	11/2009
CORDOBA (6L2) 1.6	04/2003	→	11/2009
CORDOBA 2 volumi /Coda spiovente (6K2) 1.0	06/1999	→	10/2002
CORDOBA 2 volumi /Coda spiovente (6K2) 1.0 16V	05/2000	→	10/2002
CORDOBA 2 volumi /Coda spiovente (6K2) 1.4	06/1999	→	10/2002
CORDOBA 2 volumi /Coda spiovente (6K2) 1.4 16V	02/2000	→	10/2002
CORDOBA Vario (6K5) 1.4	06/1999	→	12/2002
CORDOBA Vario (6K5) 1.4 16V	06/1999	→	06/2000
CORDOBA Vario (6K5) 1.6	06/1999	→	08/2002
IBIZA III (6K1) 1.0	08/1999	→	02/2002
IBIZA III (6K1) 1.0 16V	10/1999	→	02/2002
IBIZA III (6K1) 1.4	08/1999	→	02/2002
IBIZA III (6K1) 1.4 16V	08/1999	→	02/2002
IBIZA IV (6L1) 1.4 16V	04/2002	→	12/2007
IBIZA IV (6L1) 1.6	04/2003	→	
IBIZA V (6J5) 1.4	03/2008	→	
IBIZA V SPORTCOUPE (6J1) 1.4	07/2008	→	
INCA (6K9) 1.4 16V	09/2000	→	06/2003
INCA (6K9) 1.4 i	09/2000	→	06/2003

SKODA			
FABIA 1.4	01/2007	→	
FABIA (6Y2) 1.0	12/1999	→	08/2002
FABIA (6Y2) 1.4	09/1999	→	05/2003
FABIA (6Y2) 1.4 16V	10/2001	→	04/2007
FABIA Combi 1.4	10/2007	→	
FABIA Combi (6Y5) 1.4	04/2000	→	05/2003
FABIA Combi (6Y5) 1.4 16V	10/2001	→	12/2007
FABIA Praktik 1.4	07/2001	→	05/2003
FABIA Tre volumi (6Y3) 1.4	04/2000	→	05/2003
FABIA Tre volumi (6Y3) 1.4 16V	10/2001	→	12/2007
ROOMSTER (5J) 1.4	09/2006	→	

VW			
CADDY II Furgonato (9K9A) 1.4	09/2000	→	06/2003
CADDY II Furgonato (9K9A) 60 1.4	09/2000	→	06/2003
CADDY II Station wagon (9K9B) 1.4	09/2000	→	06/2003
CADDY II Station wagon (9K9B) 1.4 16V	09/2000	→	06/2003
FOX (5Z1, 5Z3) 1.0	10/2003	→	04/2008
FOX (5Z1, 5Z3) 1.0	05/2008	→	
FOX (5Z1, 5Z3) 1.0 Total Flex	05/2008	→	




063533250130 MAN2038 90A 12V

VW	
FOX (5Z1, 5Z3) 1.4	04/2005 →
FOX (5Z1, 5Z3) 1.6 Total Flex	10/2003 →
LUPO (6X1, 6E1) 1.0	10/1998 → 05/2000
LUPO (6X1, 6E1) 1.4	10/2000 → 07/2005
LUPO (6X1, 6E1) 1.4 16V	10/1998 → 07/2005
LUPO (6X1, 6E1) 1.6 GTI	09/2000 → 07/2005
POLO (6N2) 1.0	10/1999 → 09/2001
POLO (6N2) 1.4	10/1999 → 09/2001
POLO (6N2) 1.4 16V	10/1999 → 09/2001
POLO (6N2) 1.6 16V GTI	11/1999 → 09/2001
POLO (9N_) 1.4 16V	10/2001 → 07/2007
POLO CLASSIC (6KV2) 60 1.4	10/1999 → 09/2001
POLO CLASSIC (6KV2) 75 1.4 16V	10/1999 → 09/2001
POLO CLASSIC (6KV2) 75 1.6	07/1998 → 09/2001
POLO Tre volumi 1.4	07/2003 →
POLO Tre volumi 1.6	07/2003 →
POLO Tre volumi 1.6 Total Flex	12/2004 → 04/2008
POLO Variant (6KV5) 1.4	05/1997 → 09/2001
POLO Variant (6KV5) 1.4 16V	10/1999 → 09/2001
POLO Variant (6KV5) 1.6	07/1998 → 09/2001
SHARAN (7M8, 7M9, 7M6) 2.0	05/1999 → 02/2000
SPACEFOX (5Z6, 5Z7) 1.6 FSI	04/2006 → 04/2008
SPACEFOX (5Z6, 5Z7) 1.6 Total Flex	04/2006 → 04/2008
TRANSPORTER IV Autobus (70XB, 70XC, 7DB, 7DW) 2.0	11/1998 → 04/2003
TRANSPORTER IV Furgonato (70XA) 2.0	11/1998 → 04/2003
TRANSPORTER IV Pianale piatto/Telaio (70XD) 2.0	11/1998 → 04/2003

063533250530 MAN2039 110A 12V

FIAT	
DUCATO Autobus (244, Z_) 2.3 JTD	04/2002 → 08/2006
DUCATO Autobus (250) 120 Multijet 2,3 D	07/2006 →
DUCATO Autobus (250) 130 Multijet 2,3 D	01/2007 →
DUCATO Furgonato (244) 2.3 JTD	04/2002 → 08/2006
DUCATO Furgonato (250) 120 Multijet 2,3 D	07/2006 →
DUCATO Furgonato (250) 130 Multijet 2,3 D	01/2007 →
DUCATO Pianale piatto/Telaio (244) 2.3 JTD	04/2002 → 08/2006
DUCATO Pianale piatto/Telaio (250) 120 Multijet 2,3 D	07/2006 →
DUCATO Pianale piatto/Telaio (250) 130 Multijet 2,3 D	01/2007 →
IVECO	
DAILY II Cassone / Furgonato / Promiscuo 29 L 10 V (ALJA43A2, ALJA42A2, ALJA41A2)	09/2002 → 03/2006

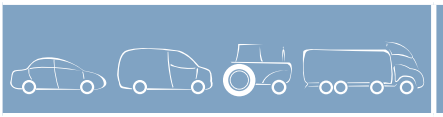


063533250530 MAN2039 110A 12V

IVECO	
DAILY II Cassone / Furgonato / Promiscuo 29 L 12 V (ALKA41A2, ALLA52A2, ALKA42A2)	09/2002 → 03/2006
DAILY II Cassone / Furgonato / Promiscuo 29 L 14	01/2005 → 03/2006
DAILY II Cassone / Furgonato / Promiscuo 35 C 12 V, 35 S 12 V (AGKA43A2, AGKB43A2, AGKB46A2, AGKC43A2)	09/2002 → 03/2006
DAILY II Cassone / Furgonato / Promiscuo 35 C 14, 35 S 14	01/2005 → 03/2006
DAILY II Cassone / Furgonato / Promiscuo 35 S 10 (ANJA41A1, ANJA42A2, ANJA42AB, ANJA43A, ANJAV1A, AGJ..)	09/2002 → 03/2006
DAILY II Pianale piatto/Telaio 29 L 10 (ALJA-V1A1, ALJA41AA, ALJA41A1, AHJA64A1, AHJA14A1, A..)	09/2002 → 03/2006
DAILY II Pianale piatto/Telaio 29 L 12 (ALKA41A1, AHKA64A1, ALLA51A1)	09/2002 → 03/2006
DAILY II Pianale piatto/Telaio 29 L 14 (AHRA11C1B1, AHRA14C1B1, AHRA64C1B1)	11/2005 → 03/2006
DAILY II Pianale piatto/Telaio 35 C 10 V , 35 S 10 V (AMJA11A1, AMJA14A1, AMJA64A1, AMJA65A..)	09/2002 → 03/2006
DAILY II Pianale piatto/Telaio 35 C 12 , 35 S 12 (AEKA14A1, AEKA14AA, AEKA64A1, AEKB11A1, A..)	09/2002 → 03/2006
DAILY II Pianale piatto/Telaio 35 C 14, 35 S 14	01/2005 → 03/2006
DAILY III Cassone / Furgonato / Promiscuo 29L10 V	05/2006 → 05/2006
DAILY III Cassone / Furgonato / Promiscuo 29L12 V, 29L12 V/P	05/2006 → 05/2006
DAILY III Cassone / Furgonato / Promiscuo 29L14 C, 29L14 C/P, 29L14 V, 29L14 V/P	05/2006 → 05/2006
DAILY III Cassone / Furgonato / Promiscuo 35C10, 35S10	05/2006 → 05/2006
DAILY III Cassone / Furgonato / Promiscuo 35C11 V, 35S11 V	06/2009 →
DAILY III Cassone / Furgonato / Promiscuo 35C12 V, 35C12 V/P, 35S12 V, 35S12 V/P	05/2006 → 05/2006
DAILY III Cassone / Furgonato / Promiscuo 35C13 V, 35C13 V/P, 35S13 V, 35S13 V/P	06/2009 →
DAILY III Cassone / Furgonato / Promiscuo 35S14 C, 35S14 C/P, 35S14 V, 35S14 V/P, 35C14 V, 35C14 V/P	05/2006 →




063533250530 MAN2039 110A 12V

IVECO	
DAILY III Cassone / Furgonato / Promiscuo 40C10 V	05/2006 → 05/2009
DAILY III Cassone / Furgonato / Promiscuo 40C11 V	06/2009 →
DAILY III Cassone / Furgonato / Promiscuo 40C12 V, 40C14 V/P	05/2006 → 05/2009
DAILY III Cassone / Furgonato / Promiscuo 40C13 V, 40C13 V/P	06/2009 →
DAILY III Pianale piatto/Telaio 29L10	05/2006 → 05/2006
DAILY III Pianale piatto/Telaio 29L12	05/2006 → 05/2006
DAILY III Pianale piatto/Telaio 29L14	05/2006 → 05/2006
DAILY III Pianale piatto/Telaio 35C10, 35S10	05/2006 → 05/2006
DAILY III Pianale piatto/Telaio 35C11, 35S11, 35S11 D	06/2009 →
DAILY III Pianale piatto/Telaio 35C12, 35S12	05/2006 → 05/2006
DAILY III Pianale piatto/Telaio 35C13, 35C13 /P, 35S13 D, 35S13, 35S13 /P	06/2009 →
DAILY III Pianale piatto/Telaio 35S14	05/2006 →
DAILY III Pianale piatto/Telaio 40C10, 40S10	05/2006 → 05/2009
DAILY III Pianale piatto/Telaio 40C11, 40C11 D, 40S11, 40S11 D	06/2009 →
DAILY III Pianale piatto/Telaio 40C12	05/2006 → 05/2009
DAILY III Pianale piatto/Telaio 40C13, 40C13 /P, 40S13 D, 40S13, 40S13 /P	06/2009 →
DAILY III Ribaltabile 35C10 K	05/2006 →
DAILY III Ribaltabile 35C11 K, 35C11 DK, 35S11 K, 35S11 DK	06/2009 →
DAILY III Ribaltabile 35C12	05/2006 → 05/2006
DAILY III Ribaltabile 35C13 K, 35C13 DK, 35S13 K, 35S13 DK	06/2009 →
DAILY III Ribaltabile 35S14 K, 35S14 DK	07/2007 →
UAZ	
PATRIOT 2.3 D	01/2007 →

063533250580 MAN2002 90A 12V

FIAT	
BRAVA (182) 1.6 16V (182.BH)	10/1995 → 10/2001
BRAVO I (182) 1.6 16V (182.AH)	10/1995 → 10/2001
DOBLO (119) 1.6 16V (223AXD1A)	10/2001 →
DOBLO (119) 1.6 Natural Power	09/2002 →
DOBLO Cargo (223) 1.6 16V (223ZXD1A)	10/2001 →
DOBLO Cargo (223) 1.6 Natural Power	09/2002 →
MAREA (185) 1.6 100 16V	09/1996 →
MAREA Weekend (185) 1.6 100 16V	09/1996 →
MULTIPLA (186) 1.6 100 16V (186AXA1A)	04/1999 → 03/2002




063533250580 MAN2002 90A 12V

FIAT	
MULTIPLA (186) 1.6 16V Bipower (186AMB1A)	04/1999 → 03/2002
MULTIPLA (186) 1.6 16V Blupower (186AMA1A)	04/1999 → 03/2002
PALIO (178BX) 1.6 16V	04/1996 →
PALIO Weekend (178DX) 1.6 16V (178DX.D1A)	04/1996 → 02/2001
PALIO Weekend (178DX) 1.6 16V (178DYC1A06)	02/2001 →
SIENA (178_) 1.6 16V	09/1998 →
STILO (192) 1.6 16V (192_XB1A)	10/2001 → 12/2003
STILO Multi Wagon (192) 1.6 16V	01/2003 →
LANCIA	
LYBRA (839AX) 1.6 16V (839AXA1A)	10/2000 →

063533250590 MAN2040 110A 12V

FIAT	
BRAVA (182) 1.6 16V (182.BB)	02/1996 → 10/2001
DOBLO (119) 1.6	01/2003 → 09/2005
DOBLO (119) 1.6 16V (223AXD1A)	10/2001 → 01/2004
DOBLO (119) 1.6 Natural Power	01/2003 →
DOBLO Cargo (223) 1.6 16V (223ZXD1A)	10/2001 → 01/2004
DOBLO Cargo (223) 1.6 Natural Power	01/2003 →
MAREA (185) 1.6	09/2000 → 08/2002
MULTIPLA (186) 1.6	09/2000 → 02/2001
MULTIPLA (186) 1.6 100 16V (186AXA1A)	04/1999 → 03/2002
MULTIPLA (186) 1.6 16V (186AGB1A)	04/2002 → 01/2005
MULTIPLA (186) 1.6 16V Bipower (186AMB1A)	04/1999 → 01/2005
MULTIPLA (186) 1.6 16V Blupower (186AMA1A)	04/1999 → 03/2002
PUNTO (188) 1.8 130 HGT (188.738, .718)	09/1999 → 06/2003
STILO (192) 1.6 16V (192_XB1A)	10/2001 → 12/2003
STILO (192) 1.8 16V (192_XC1A)	10/2001 →
STILO Multi Wagon (192) 1.6 16V	01/2003 →
STILO Multi Wagon (192) 1.8 16V	01/2003 →
LANCIA	
LYBRA (839AX) 1.6 16V (839AXA1A)	07/1999 →
LYBRA SW (839BX) 1.6 16V (839BXA1A)	07/1999 →

063533251000 MAN2028 110A 12V

FORD	
TRANSIT Autobus (FD_ _, FB_ _, FS_ _, FZ_ _, FC_ _) 2.0 TDCi (F_F_, F_E_, F_G_)	08/2002 → 07/2006
TRANSIT Autobus (FD_ _, FB_ _, FS_ _, FZ_ _, FC_ _) 2.4 DI (F_B_, F_C_, F_A_)	01/2000 → 07/2006
TRANSIT Autobus (FD_ _, FB_ _, FS_ _, FZ_ _, FC_ _) 2.4 DI (RWD) (F_B_, F_C_, F_A_)	01/2000 → 07/2006




063533251000 MAN2028 110A 12V

FORD

TRANSIT Autobus (FD_ _, FB_ _, FS_ _, FZ_ _, FC_ _) 2.4 TDCi	03/2004 → 07/2006
TRANSIT Autobus (FD_ _, FB_ _, FS_ _, FZ_ _, FC_ _) 2.4 TDdi	08/2000 → 03/2006
TRANSIT Autobus (FD_ _, FB_ _, FS_ _, FZ_ _, FC_ _) 2.4 TDE (F_C_, F_B_, F_A_)	07/2001 → 05/2006
TRANSIT Furgonato (FA_ _) 2.0 TDCi	08/2002 → 07/2006
TRANSIT Furgonato (FA_ _) 2.4 DI (FAA_, FAB_, FAC_, FAD_)	01/2000 → 07/2006
TRANSIT Furgonato (FA_ _) 2.4 DI (RWD) (FAA_, FAB_, FAC_, FAD_)	01/2000 → 07/2006
TRANSIT Furgonato (FA_ _) 2.4 TDCi	03/2004 → 07/2006
TRANSIT Furgonato (FA_ _) 2.4 TDdi	08/2000 → 08/2003
TRANSIT Furgonato (FA_ _) 2.4 TDE	07/2001 → 05/2006
TRANSIT Pianale piatto/Telaio (FM_ _, FN_ _) 2.0 TDCi (F_E_, F_F_)	08/2002 → 07/2006
TRANSIT Pianale piatto/Telaio (FM_ _, FN_ _) 2.4 DI (F_A_, F_B_, F_C_, F_D_)	01/2000 → 09/2003
TRANSIT Pianale piatto/Telaio (FM_ _, FN_ _) 2.4 TDCi	03/2004 → 07/2006
TRANSIT Pianale piatto/Telaio (FM_ _, FN_ _) 2.4 TDdi	08/2000 → 08/2003
TRANSIT Pianale piatto/Telaio (FM_ _, FN_ _) 2.4 TDE	07/2001 → 05/2006

063533251220 MAN2041 110A 12V

FIAT

DUCATO Autobus (250) 140 Natural Power	04/2009 →
DUCATO Autobus (250) 160 Multijet 3,0 D	07/2006 →
DUCATO Furgonato (250) 140 Natural Power	04/2009 →
DUCATO Furgonato (250) 160 Multijet 3,0 D	07/2006 →
DUCATO Pianale piatto/Telaio (250) 160 Multijet 3,0 D	07/2006 →

IVECO

DAILY II Cassone / Furgonato / Promiscuo 35 C 14	09/2004 → 03/2006
DAILY II Cassone / Furgonato / Promiscuo 35 C 17, 35 S 17	01/2005 → 03/2006
DAILY II Cassone / Furgonato / Promiscuo 40 C 14	09/2004 → 03/2006
DAILY II Cassone / Furgonato / Promiscuo 40 C 17, 40 S 17	01/2005 → 03/2006
DAILY II Cassone / Furgonato / Promiscuo 50 C 14	09/2004 → 03/2006

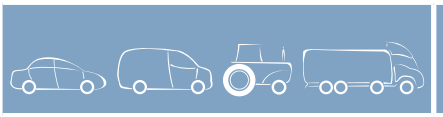


063533251220 MAN2041 110A 12V

IVECO

DAILY II Cassone / Furgonato / Promiscuo 50 C 17	09/2004 → 03/2006
DAILY II Cassone / Furgonato / Promiscuo 65 C 14	09/2004 → 03/2006
DAILY II Cassone / Furgonato / Promiscuo 65 C 17	09/2004 → 03/2006
DAILY II Pianale piatto/Telaio 35 C 14	09/2004 → 03/2006
DAILY II Pianale piatto/Telaio 35 C 17, 35 S 17	01/2005 → 03/2006
DAILY II Pianale piatto/Telaio 40 C 14	09/2004 → 03/2006
DAILY II Pianale piatto/Telaio 40 C 17, 40 S 17	01/2005 → 03/2006
DAILY II Pianale piatto/Telaio 50 C 14	09/2004 → 03/2006
DAILY II Pianale piatto/Telaio 50 C 17	09/2004 → 03/2006
DAILY II Pianale piatto/Telaio 65 C 14	09/2004 → 03/2006
DAILY II Pianale piatto/Telaio 65 C 17	09/2004 → 03/2006
DAILY III Cassone / Furgonato / Promiscuo 35C14 V, 35C14 V/P, 35S14 V, 35S14 V/P	06/2009 →
DAILY III Cassone / Furgonato / Promiscuo 35C15 V, 35C15 V/P	04/2006 → 05/2006
DAILY III Cassone / Furgonato / Promiscuo 35C17 V, 35C17 V/P, 35S17 V, 35S17 V/P	06/2009 →
DAILY III Cassone / Furgonato / Promiscuo 35C18 V, 35C18 V/P, 35S18 V, 35S18 V/P	05/2006 → 05/2006
DAILY III Cassone / Furgonato / Promiscuo 35S14 C, 35S14 C/P, 35S14 V, 35S14 V/P, 35C14 V, 35C14 V/P	05/2006 → 05/2009
DAILY III Cassone / Furgonato / Promiscuo 40C14 V, 40C14 V/P, 40S14 V, 40S14 V/P	06/2009 →
DAILY III Cassone / Furgonato / Promiscuo 40C15 V, 40C15 V/P	05/2006 → 05/2006
DAILY III Cassone / Furgonato / Promiscuo 40C17 V, 40C17 V/P	06/2009 →
DAILY III Cassone / Furgonato / Promiscuo 40C18 V, 40C18 V/P	05/2006 → 05/2006
DAILY III Cassone / Furgonato / Promiscuo 45C15 V	05/2006 → 05/2009
DAILY III Cassone / Furgonato / Promiscuo 45C18	05/2006 →
DAILY III Cassone / Furgonato / Promiscuo 50C14 V, 50C14 V/P	06/2009 →
DAILY III Cassone / Furgonato / Promiscuo 50C15	05/2006 → 05/2006
DAILY III Cassone / Furgonato / Promiscuo 50C17 V, 50C17 V/P	06/2009 →
DAILY III Cassone / Furgonato / Promiscuo 50C18	05/2006 → 05/2006




063533251220 MAN2041 110A 12V

IVECO	
DAILY III Cassone / Furgonato / Promiscuo 60C15 V	05/2006 →
DAILY III Cassone / Furgonato / Promiscuo 60C18	05/2006 →
DAILY III Cassone / Furgonato / Promiscuo 65C14 V, 65C14 V/P	06/2009 →
DAILY III Cassone / Furgonato / Promiscuo 65C15	05/2006 →
DAILY III Cassone / Furgonato / Promiscuo 65C17 V, 65C17 V/P	06/2009 →
DAILY III Cassone / Furgonato / Promiscuo 65C18	05/2006 → 05/2006
DAILY III Cassone / Furgonato / Promiscuo 70C14 V, 70C14 V/P	11/2010 →
DAILY III Pianale piatto/Telaio 35C14, 35C14 /P, 35S14, 35S14 /P, 35S14 D, 35S14 D/P	06/2009 →
DAILY III Pianale piatto/Telaio 35C15	04/2006 → 05/2006
DAILY III Pianale piatto/Telaio 35C17, 35C17 /P, 35S17, 35S17 /P, 35S17 D	06/2009 →
DAILY III Pianale piatto/Telaio 35C18, 35S18	05/2006 → 05/2006
DAILY III Pianale piatto/Telaio 35S14	05/2006 → 05/2009
DAILY III Pianale piatto/Telaio 35S17 W, 35S17 WD	06/2009 →
DAILY III Pianale piatto/Telaio 40C14, 40C14 /P, 40S14, 40S14 /P, 40S14 D, 40S14 D/P	06/2009 →
DAILY III Pianale piatto/Telaio 40C15	05/2006 → 05/2006
DAILY III Pianale piatto/Telaio 40C17, 40C17 /P, 40S17, 40S17 /P, 40S17 D	06/2009 →
DAILY III Pianale piatto/Telaio 40C18	05/2006 → 05/2006
DAILY III Pianale piatto/Telaio 45C15	05/2006 → 05/2009
DAILY III Pianale piatto/Telaio 45C18, 45C18 /P, 45C18 D, 45C18 D/P	05/2006 →
DAILY III Pianale piatto/Telaio 50C14, 50C14 /P	06/2009 →
DAILY III Pianale piatto/Telaio 50C15	05/2006 → 05/2006
DAILY III Pianale piatto/Telaio 50C17, 50C17 /P	06/2009 →
DAILY III Pianale piatto/Telaio 50C18	05/2006 → 05/2006
DAILY III Pianale piatto/Telaio 55S17 W, 55S17 WD	07/2007 →
DAILY III Pianale piatto/Telaio 60C14, 60C14 /P	11/2010 →
DAILY III Pianale piatto/Telaio 60C15, 60C15 /P, 60C15 D, 60C15 D/P	05/2006 →
DAILY III Pianale piatto/Telaio 60C18	05/2006 →
DAILY III Pianale piatto/Telaio 65C14, 65C14 /P	06/2009 →




063533251220 MAN2041 110A 12V

IVECO	
DAILY III Pianale piatto/Telaio 65C15, 65C15 /P, 65C15 D, 65C15 D/P	05/2006 →
DAILY III Pianale piatto/Telaio 65C17, 65C17 /P	06/2009 →
DAILY III Pianale piatto/Telaio 65C18	05/2006 → 05/2006
DAILY III Pianale piatto/Telaio 70C14, 70C14 /P	11/2010 →
DAILY III Ribaltabile 35C14 K, 35C14 DK, 35S14 K, 35S14 DK	06/2009 →
DAILY III Ribaltabile 35C15	04/2006 → 05/2006
DAILY III Ribaltabile 35C17 K, 35C17 DK, 35S17 K, 35S17 DK	06/2009 →
DAILY III Ribaltabile 35C18	05/2006 → 05/2006
DAILY III Ribaltabile 40C14 K, 40C14 DK, 40S14 K, 40S14 DK	06/2009 →
DAILY III Ribaltabile 40C17 K, 40C17 DK	06/2009 →
DAILY III Ribaltabile 50C14 K, 50C14 DK	06/2009 →
DAILY III Ribaltabile 50C15	05/2006 → 05/2006
DAILY III Ribaltabile 50C17 K, 50C17 DK	06/2009 →
DAILY III Ribaltabile 50C18	05/2006 → 05/2006
DAILY III Ribaltabile 60C14 K, 60C14 DK	11/2010 →
DAILY III Ribaltabile 60C15	05/2006 →
DAILY III Ribaltabile 60C18	05/2006 →
DAILY III Ribaltabile 65C14 K, 65C14 DK	06/2009 →
DAILY III Ribaltabile 65C17 K, 65C17 DK, 65C17KK	06/2009 →
DAILY III Ribaltabile 70C14 K, 70C14 DK, 70C14 KK	11/2010 →
MASSIF Pick-up 3.0 HPI	10/2008 →
MASSIF Pick-up 3.0 HPT	10/2008 →
MASSIF Single Cab 3.0 HPI	10/2008 →
MASSIF Single Cab 3.0 HPT	10/2008 →
MASSIF Station Wagon 3.0 HPI	10/2008 →
MASSIF Station Wagon 3.0 HPT	10/2008 →

063533350070 MAN2005 70A 12V

CITROEN	
BERLINGO (MF) 1.1 i (MFHDZ)	07/1996 → 11/2002
BERLINGO (MF) 1.4 i (MFKFX)	07/1996 → 11/2002
BERLINGO Furgonato (M_) 1.1 i (MAHDZ, MBHDZ)	07/1996 → 11/2002
BERLINGO Furgonato (M_) 1.4 i (MBKFX)	07/1996 → 11/2002
SAXO (S0, S1) 1.0 X	05/1996 → 09/2003
SAXO (S0, S1) 1.1 X,SX	05/1996 → 09/2003
SAXO (S0, S1) 1.4 VTS	06/2000 → 09/2003
XSARA (N1) 1.4 i	07/1997 → 08/2000
XSARA Break (N2) 1.4 i	04/1998 → 08/2000

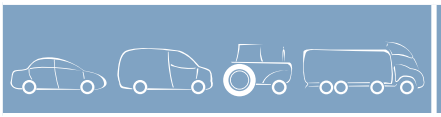


063533350070 MAN2005 70A 12V

CITROEN	
XSARA Coupe (N0) 1.4 i	03/1998 → 08/2000
ZX (N2) 1,1	03/1991 → 03/1994
ZX (N2) 1.4	08/1992 → 08/1996
ZX (N2) 1.4 i	03/1991 → 06/1997
ZX Break (N2) 1.4 i	10/1993 → 08/1996
PEUGEOT	
106 I (1A, 1C) 1.0	07/1992 → 04/1996
106 I (1A, 1C) 1.1	09/1991 → 12/1993
106 I (1A, 1C) 1.3	10/1993 → 04/1996
106 I (1A, 1C) 1.4	09/1991 → 04/1996
106 I (1A, 1C) 1.6	06/1993 → 04/1996
106 II (1) 1.0 i	05/1996 → 05/2005
106 II (1) 1.1 i	05/1996 → 05/2005
106 II (1) 1.4 i	05/1996 → 05/2005
206 2 volumi /Coda spiovente (2A/C) 1.1	08/1998 → 07/2000
206 2 volumi /Coda spiovente (2A/C) 1.1 i	09/1998 → 10/2005
206 2 volumi /Coda spiovente (2A/C) 1.4 i	09/1998 → 02/2009
206 2 volumi /Coda spiovente (2A/C) 1.4 LPG	05/2006 → 09/2007
206 2 volumi /Coda spiovente (2A/C) 1.6 16V	12/2000 → 08/2007
206 2 volumi /Coda spiovente (2A/C) 1.6 i	09/1998 → 12/2000
206 SW (2E/K) 1.1	07/2002 → 10/2005
206 SW (2E/K) 1.4	07/2002 → 12/2006
206 SW (2E/K) 1.6 16V	07/2002 → 12/2006
206 Tre volumi 1.6 16V	03/2007 →
306 (7B, N3, N5) 1.1	06/1994 → 04/1997
306 (7B, N3, N5) 1.4 SL	04/1997 → 10/2000
306 (7B, N3, N5) 1.6	10/2000 → 05/2001
306 (7B, N3, N5) 1.6 SR	06/1994 → 04/1997
306 2 volumi /Coda spiovente (7A, 7C, N3, N5) 1.1	05/1993 → 04/1997
306 2 volumi /Coda spiovente (7A, 7C, N3, N5) 1.4	04/1997 → 10/2000
306 2 volumi /Coda spiovente (7A, 7C, N3, N5) 1.6	05/1993 → 05/2001
306 Break (7E, N3, N5) 1.4	05/1997 → 03/2002
306 Break (7E, N3, N5) 1.6	05/1997 → 03/2002
306 Cabriolet (7D, N3, N5) 1.6	04/1996 → 04/2002
405 II (4B) 1.4	08/1992 → 10/1995
405 II Break (4E) 1.4	08/1992 → 10/1996
PARTNER Combispace (5F) 1.1	07/1996 → 08/2002
PARTNER Combispace (5F) 1.4	07/1996 → 08/2002
PARTNER Furgonato (5) 1.1	07/1996 → 08/2002
PARTNER Furgonato (5) 1.4	07/1996 → 08/2002

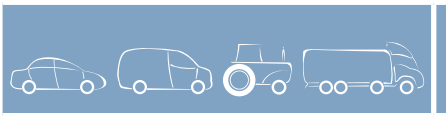


063533479010 MAN2801 100A 12V

OPEL	
ASTRA F (56_, 57_) 1.4	09/1991 → 09/1998
ASTRA F (56_, 57_) 1.4 i	09/1991 → 09/1998
ASTRA F (56_, 57_) 1.4 i 16V	02/1996 → 09/1998
ASTRA F (56_, 57_) 1.4 Si	03/1992 → 09/1998
ASTRA F (56_, 57_) 1.6	09/1995 → 09/1998
ASTRA F (56_, 57_) 1.6 i	03/1992 → 09/1998
ASTRA F (56_, 57_) 1.6 i 16V	08/1994 → 09/1998
ASTRA F (56_, 57_) 1.6 Si	05/1992 → 12/1994
ASTRA F (56_, 57_) 1.8 i	03/1992 → 09/1998
ASTRA F (56_, 57_) 1.8 i 16V	06/1993 → 09/1998
ASTRA F (56_, 57_) 2.0 i	03/1992 → 09/1998
ASTRA F (56_, 57_) 2.0 i 16V	02/1995 → 09/1998
ASTRA F 2 volumi /Coda spiovente (53_, 54_, 58_, 59_) 1.4	09/1991 → 01/1998
ASTRA F 2 volumi /Coda spiovente (53_, 54_, 58_, 59_) 1.4 i	03/1992 → 01/1998
ASTRA F 2 volumi /Coda spiovente (53_, 54_, 58_, 59_) 1.4 i 16V	01/1996 → 01/1998
ASTRA F 2 volumi /Coda spiovente (53_, 54_, 58_, 59_) 1.4 Si	03/1992 → 01/1998
ASTRA F 2 volumi /Coda spiovente (53_, 54_, 58_, 59_) 1.6	09/1995 → 01/1998
ASTRA F 2 volumi /Coda spiovente (53_, 54_, 58_, 59_) 1.6 i	09/1991 → 01/1998
ASTRA F 2 volumi /Coda spiovente (53_, 54_, 58_, 59_) 1.6 i 16V	08/1994 → 01/1998
ASTRA F 2 volumi /Coda spiovente (53_, 54_, 58_, 59_) 1.6 Si	03/1992 → 12/1994
ASTRA F 2 volumi /Coda spiovente (53_, 54_, 58_, 59_) 1.8 i	09/1991 → 01/1998
ASTRA F 2 volumi /Coda spiovente (53_, 54_, 58_, 59_) 1.8 i 16V	06/1993 → 01/1998
ASTRA F 2 volumi /Coda spiovente (53_, 54_, 58_, 59_) 2.0 GSI 16V	09/1991 → 01/1998
ASTRA F 2 volumi /Coda spiovente (53_, 54_, 58_, 59_) 2.0 i	09/1991 → 01/1998
ASTRA F 2 volumi /Coda spiovente (53_, 54_, 58_, 59_) 2.0 i 16V	02/1995 → 01/1998
ASTRA F Cabriolet (53_B) 1.4 i 16V	01/1996 → 03/2001
ASTRA F Cabriolet (53_B) 1.4 Si	05/1993 → 03/2001
ASTRA F Cabriolet (53_B) 1.6 i	03/1993 → 03/2001
ASTRA F Cabriolet (53_B) 1.8 i 16V	11/1994 → 08/1998
ASTRA F Cabriolet (53_B) 2.0 i	03/1993 → 10/1994
ASTRA F Station wagon (51_, 52_) 1.4	09/1991 → 01/1998



063533479010 MAN2801 100A 12V

OPEL			
ASTRA F Station wagon (51_, 52_) 1.4 i	09/1991	→	01/1998
ASTRA F Station wagon (51_, 52_) 1.4 i 16V	02/1996	→	01/1998
ASTRA F Station wagon (51_, 52_) 1.4 Si	03/1992	→	01/1998
ASTRA F Station wagon (51_, 52_) 1.6	09/1995	→	01/1998
ASTRA F Station wagon (51_, 52_) 1.6 i	09/1991	→	01/1998
ASTRA F Station wagon (51_, 52_) 1.6 i 16V	08/1994	→	01/1998
ASTRA F Station wagon (51_, 52_) 1.6 Si	03/1992	→	12/1994
ASTRA F Station wagon (51_, 52_) 1.8 i	09/1991	→	01/1998
ASTRA F Station wagon (51_, 52_) 1.8 i 16V	06/1993	→	01/1998
ASTRA F Station wagon (51_, 52_) 2.0 i	09/1991	→	07/1994
ASTRA F Station wagon (51_, 52_) 2.0 i 16V	03/1993	→	01/1998
ASTRA F Van (55_) 1.4 i	10/1991	→	02/1998
ASTRA F Van (55_) 1.6 i	10/1991	→	07/1996
CALIBRA A (85_) 2.0 i	06/1990	→	07/1997
CALIBRA A (85_) 2.0 i 16V	06/1990	→	08/1996
CALIBRA A (85_) 2.0 i 16V 4x4	06/1990	→	08/1996
CALIBRA A (85_) 2.0 i 4x4	06/1990	→	07/1997
CALIBRA A (85_) 2.0 i Turbo 4x4	03/1992	→	07/1997
COMBO (71_) 1.4	07/1994	→	10/2001
COMBO (71_) 1.4 16V	08/1999	→	10/2001
CORSA B (73_, 78_, 79_) 1.4 i	09/1994	→	09/2000
CORSA B (73_, 78_, 79_) 1.4 i 16V	09/1994	→	09/2000
CORSA B (73_, 78_, 79_) 1.4 Si	09/1994	→	09/2000
CORSA B (73_, 78_, 79_) 1.6 GSI 16V	09/1994	→	09/2000
CORSA B (73_, 78_, 79_) 1.6 i 16V	09/1994	→	09/2000
CORSA B Furgonato (73_) 1.4 i	08/1999	→	09/2000
FRONTERA A (5_MWL4) 2.2 i (54MWL4)	03/1995	→	10/1998
FRONTERA B (6B_) 2.2 i (6B_ZC, 6B_VF, 6B_66, 6B_76)	10/1998	→	
OMEGA B (25_, 26_, 27_) 2.0	03/1994	→	09/1999
OMEGA B (25_, 26_, 27_) 2.0 16V	03/1994	→	09/1999
OMEGA B (25_, 26_, 27_) 2.2 16V	09/1999	→	07/2003
OMEGA B Station wagon (21_, 22_, 23_) 2.0	03/1994	→	09/1999
OMEGA B Station wagon (21_, 22_, 23_) 2.0 16V	03/1994	→	09/1999
OMEGA B Station wagon (21_, 22_, 23_) 2.2 16V	09/1999	→	07/2003
TIGRA (95_) 1.4 16V	07/1994	→	08/1999
TIGRA (95_) 1.6 16V	07/1994	→	08/1998
VECTRA A (86_, 87_) 1.6 i	09/1993	→	11/1995
VECTRA A (86_, 87_) 1.6 i Cat.	09/1993	→	11/1995
VECTRA A (86_, 87_) 1.8 i Cat.	03/1990	→	11/1995
VECTRA A (86_, 87_) 2.0	09/1988	→	09/1989
VECTRA A (86_, 87_) 2.0 i	09/1988	→	09/1992



063533479010 MAN2801 100A 12V

OPEL			
VECTRA A (86_, 87_) 2.0 i 16V	06/1994	→	11/1995
VECTRA A (86_, 87_) 2.0 i 16V 4x4	06/1994	→	11/1995
VECTRA A (86_, 87_) 2.0 i 4x4	01/1989	→	09/1992
VECTRA A (86_, 87_) 2.0 i 4x4 Cat.	01/1989	→	11/1995
VECTRA A (86_, 87_) 2.0 i Cat.	09/1988	→	11/1995
VECTRA A (86_, 87_) 2.0 i Turbo 4x4	06/1994	→	11/1995
VECTRA A (86_, 87_) 2000 16V 4x4	01/1989	→	10/1990
VECTRA A (86_, 87_) 2000/GT 16V	01/1989	→	06/1994
VECTRA A (86_, 87_) 2000/GT 16V 4x4 Cat.	02/1990	→	08/1992
VECTRA A (86_, 87_) 2000/GT 16V Cat.	02/1990	→	11/1995
VECTRA A 2 volumi /Coda spiovente (88_, 89_) 1.6 i	09/1993	→	11/1995
VECTRA A 2 volumi /Coda spiovente (88_, 89_) 1.6 i Cat.	09/1993	→	11/1995
VECTRA A 2 volumi /Coda spiovente (88_, 89_) 1.8 i Cat.	03/1990	→	11/1995
VECTRA A 2 volumi /Coda spiovente (88_, 89_) 2.0	04/1988	→	09/1989
VECTRA A 2 volumi /Coda spiovente (88_, 89_) 2.0 i	09/1988	→	10/1990
VECTRA A 2 volumi /Coda spiovente (88_, 89_) 2.0 i 16V	02/1989	→	11/1995
VECTRA A 2 volumi /Coda spiovente (88_, 89_) 2.0 i 16V Cat.	02/1990	→	11/1995
VECTRA A 2 volumi /Coda spiovente (88_, 89_) 2.0 i Cat.	09/1988	→	11/1995
VECTRA A 2 volumi /Coda spiovente (88_, 89_) 2.0 i GT	09/1988	→	11/1995
VECTRA B (36_) 1.6 i	10/1995	→	04/2002
VECTRA B (36_) 1.6 i 16V	10/1995	→	04/2002
VECTRA B (36_) 1.8 i 16V	10/1995	→	04/2002
VECTRA B (36_) 2.0 i	10/1995	→	09/1999
VECTRA B (36_) 2.0 i 16V	10/1995	→	09/2000
VECTRA B 2 volumi /Coda spiovente (38_) 1.6 i	10/1995	→	09/2000
VECTRA B 2 volumi /Coda spiovente (38_) 1.6 i 16V	10/1995	→	07/2002
VECTRA B 2 volumi /Coda spiovente (38_) 1.8 i 16V	10/1995	→	07/2003
VECTRA B 2 volumi /Coda spiovente (38_) 2.0 i	10/1995	→	09/1999
VECTRA B 2 volumi /Coda spiovente (38_) 2.0 i 16V	10/1995	→	09/2000
VECTRA B Station wagon (31_) 1.6 i	11/1996	→	06/2000




063533479010 MAN2801 100A 12V

OPEL	
VECTRA B Station wagon (31_) 1.6 i 16V	11/1996 → 07/2002
VECTRA B Station wagon (31_) 1.8 i 16V	11/1996 → 07/2003
VECTRA B Station wagon (31_) 2.0 i	11/1996 → 09/1999
VECTRA B Station wagon (31_) 2.0 i 16V	11/1996 → 09/2000
VAUXHALL	
ASTRA Mk III (F) 1.4 i	04/1992 → 09/1998
ASTRA Mk III (F) 1.4 i 16V	02/1996 → 09/1998
ASTRA Mk III (F) 1.6 i	03/1992 → 09/1998
ASTRA Mk III (F) 1.6 i 16V	08/1994 → 09/1998
ASTRA Mk III (F) 1.8 i	03/1992 → 09/1998
ASTRA Mk III (F) 1.8 i 16V	06/1993 → 12/1996
ASTRA Mk III (F) 2.0 i	03/1992 → 09/1998
ASTRA Mk III (F) 2.0 i 16V	02/1995 → 09/1998
ASTRA Mk III (F) 2 volumi /Coda spiovente 1.4 i	09/1991 → 02/1998
ASTRA Mk III (F) 2 volumi /Coda spiovente 1.4 i 16V	02/1996 → 02/1998
ASTRA Mk III (F) 2 volumi /Coda spiovente 1.4 S	09/1991 → 02/1998
ASTRA Mk III (F) 2 volumi /Coda spiovente 1.6 i	09/1991 → 02/1998
ASTRA Mk III (F) 2 volumi /Coda spiovente 1.6 i 16V	01/1994 → 02/1998
ASTRA Mk III (F) 2 volumi /Coda spiovente 1.8 i	09/1991 → 02/1998
ASTRA Mk III (F) 2 volumi /Coda spiovente 1.8 i 16V	09/1994 → 02/1998
ASTRA Mk III (F) 2 volumi /Coda spiovente 2.0 i	09/1991 → 02/1998
ASTRA Mk III (F) 2 volumi /Coda spiovente 2.0 i 16V	09/1991 → 02/1998
ASTRA Mk III (F) Cabriolet 1.4 i	05/1993 → 03/2001
ASTRA Mk III (F) Cabriolet 1.4 i 16V	01/1996 → 03/2001
ASTRA Mk III (F) Cabriolet 1.6 i	03/1993 → 03/2001
ASTRA Mk III (F) Cabriolet 1.8 16V	11/1994 → 03/2001
ASTRA Mk III (F) Cabriolet 2.0 i	03/1993 → 10/1994
ASTRA Mk III (F) Station wagon 1.4 i	03/1991 → 02/1998
ASTRA Mk III (F) Station wagon 1.4 i 16V	02/1996 → 01/1998
ASTRA Mk III (F) Station wagon 1.4 S	09/1991 → 02/1998
ASTRA Mk III (F) Station wagon 1.6 i	09/1991 → 02/1998
ASTRA Mk III (F) Station wagon 1.6 i 16V	01/1994 → 02/1998
ASTRA Mk III (F) Station wagon 1.6 Si	03/1991 → 12/1994
ASTRA Mk III (F) Station wagon 1.8 i	09/1991 → 02/1998
ASTRA Mk III (F) Station wagon 1.8 i 16V	09/1994 → 02/1998

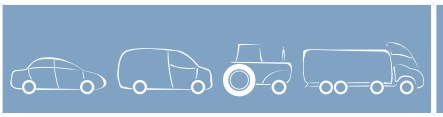


063533479010 MAN2801 100A 12V

VAUXHALL	
ASTRA Mk III (F) Station wagon 2.0 i	09/1991 → 02/1998
ASTRA Mk III (F) Station wagon 2.0 i 16V	01/1994 → 02/1998
ASTRAVAN Mk III (F) 1.4 i	01/1991 → 10/1994
ASTRAVAN Mk III (F) 1.6 i	01/1991 → 08/1998
CAVALIER Mk III (87) 1.8	09/1988 → 08/1995
CAVALIER Mk III (87) 1.8 i Cat.	03/1990 → 11/1995
CAVALIER Mk III (87) 2.0 i	09/1988 → 10/1990
CAVALIER Mk III (87) 2.0 i 16V	09/1988 → 11/1995
CAVALIER Mk III (87) 2.0 i 16V 4x4	09/1988 → 11/1995
CAVALIER Mk III (87) 2.0 i 4x4	09/1988 → 09/1992
CAVALIER Mk III (87) 2.0 i Cat.	09/1990 → 11/1995
CAVALIER Mk III (87) 2.0 i Turbo 4x4	06/1992 → 11/1994
CAVALIER Mk III (87) 2.0 SRi	09/1988 → 09/1992
CAVALIER Mk III (87) 2.0 SRi 16V	09/1993 → 11/1995
CAVALIER Mk III 2 volumi /Coda spiovente 1.8	09/1988 → 10/1990
CAVALIER Mk III 2 volumi /Coda spiovente 1.8 i Cat.	03/1990 → 11/1995
CAVALIER Mk III 2 volumi /Coda spiovente 2.0 i	09/1988 → 10/1992
CAVALIER Mk III 2 volumi /Coda spiovente 2.0 i 16V	09/1988 → 11/1995
CAVALIER Mk III 2 volumi /Coda spiovente 2.0 i 16V 4x4	01/1992 → 11/1993
CAVALIER Mk III 2 volumi /Coda spiovente 2.0 i 4x4	09/1988 → 09/1992
CAVALIER Mk III 2 volumi /Coda spiovente 2.0 i Cat.	09/1990 → 11/1995
CAVALIER Mk III 2 volumi /Coda spiovente 2.0 SRi	09/1988 → 09/1992
COMBO Mk I (B) 1.4	07/1994 → 10/2001
CORSA Cabriolet 1.4 i 16V	01/1998 →
CORSA Mk II (B) 1.4 i	03/1993 → 09/2000
CORSA Mk II (B) 1.4 i 16V	09/1994 → 09/2000
CORSA Mk II (B) 1.4 i S	03/1993 → 09/2000
CORSA Mk II (B) 1.6 GSI 16V	03/1993 → 09/2000
CORSA Mk II (B) 1.6 i 16V	09/1994 → 09/2000
CORSAVAN Mk II (B) 1.4 i	01/1994 → 09/2000
FRONTERA Mk I (A) 2.2 i	03/1995 → 10/1998
FRONTERA Mk I (A) Sport 2.0 i	03/1992 → 10/1998
FRONTERA Mk II (B) 2.2 i	10/1998 →
OMEGA (B) 2.0	03/1994 → 09/1999
OMEGA (B) 2.0 16V	03/1994 → 09/1999
OMEGA (B) 2.2 16V	01/1994 → 06/2003




063533479010	MAN2801	100A	12V
VAUXHALL			
OMEGA (B) Station wagon 2.0	03/1994	→	09/1999
OMEGA (B) Station wagon 2.0 16V	03/1994	→	02/2001
OMEGA (B) Station wagon 2.2 16V	02/1994	→	06/2003
TIGRA Mk I 1.4 16V	07/1994	→	12/2000
TIGRA Mk I 1.6 16V	07/1994	→	12/2000
VECTRA (B) 1.6 i	08/1995	→	10/2001
VECTRA (B) 1.6 i 16V	08/1995	→	10/2001
VECTRA (B) 1.8 i 16V	10/1995	→	09/2000
VECTRA (B) 1.8 i 16V	09/2000	→	
VECTRA (B) 2.0 i 16V	10/1995	→	01/2001
VECTRA (B) 2 volumi /Coda spiovente 1.6 i	08/1995	→	10/2001
VECTRA (B) 2 volumi /Coda spiovente 1.6 i 16V	08/1995	→	10/2001
VECTRA (B) 2 volumi /Coda spiovente 1.8 i 16V	10/1995	→	09/2000
VECTRA (B) 2 volumi /Coda spiovente 1.8 i 16V	09/2000	→	
VECTRA (B) 2 volumi /Coda spiovente 2.0 i 16V	10/1995	→	01/2001
VECTRA (B) Station wagon 1.6 i	11/1996	→	
VECTRA (B) Station wagon 1.6 i 16V	11/1996	→	
VECTRA (B) Station wagon 1.8 i 16V	11/1996	→	09/2000
VECTRA (B) Station wagon 1.8 i 16V	09/2000	→	
VECTRA (B) Station wagon 2.0 i 16V	10/1995	→	01/2001
063534150080	**MAN2029**	**100A**	**12V**
VAUXHALL			
OMEGA (B) 2.2 16V	09/1999	→	09/2004
OMEGA (B) Station wagon 2.2 16V	09/1999	→	09/2004
063534150120	**MAN2042**	**105A**	**12V**
ALFA ROMEO			
147 (937) 2.0 16V T.SPARK (937AXC1_)	01/2001	→	12/2010
FIAT			
BRAVA (182) 1.6 16V (182.BB)	11/1998	→	12/2001
DOBLO (119) 1.6 16V (223AXD1A)	10/2001	→	09/2005
DOBLO Cargo (223) 1.6 16V (223ZXD1A)	10/2001	→	09/2005
MAREA (185) 1.6 100 16V	10/1999	→	12/2002
MAREA Weekend (185) 1.6	05/2001	→	08/2002
MULTIPLA (186) 1.6	09/2000	→	01/2005
MULTIPLA (186) 1.6 100 16V (186AXA1A)	04/1999	→	01/2005
MULTIPLA (186) 1.6 16V (186AGB1A)	04/2002	→	01/2005
MULTIPLA (186) 1.6 16V Bipower (186AM-B1A)	04/1999	→	01/2005
MULTIPLA (186) 1.6 16V Blupower (186AMA1A)	04/1999	→	03/2002
PUNTO (188) 1.8 130 HGT (188.738, .718)	03/2002	→	




063534150120	MAN2042	105A	12V
FIAT			
STILO (192) 1.8 16V (192_XC1A)	10/2001	→	12/2003
STILO Multi Wagon (192) 1.8 16V	01/2003	→	
LANCIA			
LYBRA (839AX) 1.6	10/2000	→	09/2005
LYBRA (839AX) 1.6 16V (839AXA1A)	10/1999	→	09/2005
LYBRA SW (839BX) 1.6	10/2000	→	09/2005
LYBRA SW (839BX) 1.6 16V (839BXA1A)	10/1999	→	09/2005
063534150230	**MAN2043**	**100A**	**12V**
OPEL			
ASTRA G 2 volumi /Coda spiovente (F48_, F08_) 1.2 16V	02/1998	→	09/2003
ASTRA G Station wagon (F35_) 1.2 16V	02/1998	→	09/2003
ASTRA G Tre volumi (F69_) 1.2 16V	09/1998	→	09/2003
CORSA C (F08, F68) 1.0	09/2000	→	08/2003
CORSA C (F08, F68) 1.2	09/2000	→	06/2004
CORSA C Furgonato (F08, W5L) 1.2 16V	09/2000	→	06/2004
VAUXHALL			
CORSA Mk III (C) 1.0 12V	09/2000	→	08/2003
CORSA Mk III (C) 1.2 16V	09/2000	→	08/2004
CORSA Mk III (C) 1.2 16V Dualfuel	08/2001	→	08/2004
CORSAVAN Mk III (C) 1.2 16V	09/2000	→	08/2004
CORSAVAN Mk III (C) 1.2 16V Dualfuel	08/2001	→	08/2004
063534681240	**MAN2006**	**80A**	**24V**
IVECO			
EuroCargo 120 E 23	01/1992	→	08/2000
EuroCargo 130 E 23	04/1992	→	07/2000
EuroCargo 135 E 23 W	01/1997	→	07/2000
EuroCargo 135 E 23 WR	01/1994	→	12/1996
EuroCargo 150 E 23	01/1992	→	07/2000
EuroCargo 150 E 27, 150 E 27 R	01/1992	→	07/2000
EuroCargo 170 E 23 K,180 E 23 K	01/1994	→	07/2000
EuroCargo 170 E 23,180 E 23	01/1994	→	07/2000
EuroCargo 170 E 27,180 E 27	01/1994	→	07/2000
EuroCargo 260 E 23	12/1991	→	07/2000
EuroCargo 260 E 23 KE	12/1991	→	07/2000
EuroCargo 260 E 23 T	01/1992	→	07/2000
EuroCargo 260 E 27 KE	09/1991	→	07/2000
EuroCargo 280 E 23	12/1991	→	11/2000
EuroCargo 280 E 23 T	01/1992	→	08/2000
EuroCargo 320 E 27	10/1991	→	08/2000
EuroCargo 320 E 27 T	01/1992	→	08/2000
EuroStar LD 190 E 38 P	01/1993	→	07/2000
EuroStar LD 190 E 42, LD 190 E 42 P	01/1993	→	11/2000
EuroStar LD 190 E 47	01/1993	→	11/2000




063534681240 MAN2006 80A 24V

IVECO	
EuroStar LD 190 E 52	01/1993 → 11/2000
EuroStar LD 240 E 38	01/1993 → 11/2000
EuroStar LD 240 E 42 FS, LD 240 E 42 PS	01/1993 → 12/2000
EuroStar LD 240 E 47 P	11/1995 → 02/2002
EuroStar LD 240 E 52 P	01/1993 → 12/2000
EuroStar LD 260 E 38 P	01/1993 → 09/1995
EuroStar LD 260 E 42 P	01/1993 → 12/2000
EuroStar LD 260 E 47	01/1993 → 12/2000
EuroStar LD 260 E 52	01/1993 → 07/2000
EuroStar LD 400 E 38 TXP,LD 440 E 38 TXP	01/1993 → 11/2000
EuroStar LD 400 E 42 TXP,LD 440 E 42 TXP	01/1993 → 12/2000
EuroStar LD 440 E 38 T	04/1993 → 11/2000
EuroStar LD 440 E 38 TZ	04/1993 → 11/2000
EuroStar LD 440 E 42 T/P	01/1993 → 12/2000
EuroStar LD 440 E 42 TZ	01/1993 → 12/2000
EuroStar LD 440 E 47 T/P	01/1993 → 12/2000
EuroStar LD 440 E 47 TZ	01/1993 → 12/2000
EuroStar LD 440 E 52 T	01/1993 → 12/2000
EuroStar LD 440 E 52 TZ	01/1993 → 12/2000
EuroTech MP 190 E 42, 190 E 42 /P	01/1993 → 11/2000
EuroTech MP 400 E 38 T, 440 E 38 T, 440 E 38 T /P	09/1992 → 11/2000
EuroTech MP 400 E 42 T, 440 E 42 T, 440 E 42 T/P	04/1992 → 12/2000
EuroTech MP MP 180 E 34	04/1992 → 12/1993
EuroTech MP MP 180 E 38	09/1992 → 12/1993
EuroTech MP MP 180 E 42	04/1992 → 12/1993
EuroTech MP MP 190 E 34	01/1993 → 07/2000
EuroTech MP MP 190 E 38	01/1993 → 07/2000
EuroTech MP MP 240 E 30 PS	01/1997 → 12/2002
EuroTech MP MP 240 E 34	09/1995 → 12/1996
EuroTech MP MP 240 E 38	09/1992 → 11/2000
EuroTech MP MP 240 E 42	04/1992 → 12/2000
EuroTech MP MP 260 E 38 P	01/1994 → 07/2000
EuroTech MP MP 260 E 42	01/1994 → 12/2000
EuroTech MP MP 400 E 34 T,MP 440 E 34 T	04/1992 → 12/2000
EuroTech MP MP 400 E 38 TXP	11/1993 → 12/1996
EuroTech MP MP 440 E 38 TZ	04/1993 → 12/2000
EuroTech MP MP 440 E 42 TZ	01/1993 → 12/2000
EuroTech MT MT 180 E 24	07/1992 → 12/1996
EuroTech MT MT 180 E 24 K	01/1993 → 12/1996
EuroTech MT MT 180 E 27	07/1992 → 12/1996
EuroTech MT MT 180 E 27 K	07/1992 → 12/1996
EuroTech MT MT 180 E 30 R	07/1992 → 12/1996

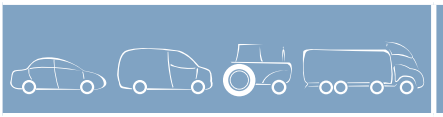


063534681240 MAN2006 80A 24V

IVECO	
EuroTech MT MT 180 E 34 R	04/1992 → 12/1993
EuroTech MT MT 190 E 24	01/1997 → 08/1998
EuroTech MT MT 190 E 24 K	01/1997 → 08/1998
EuroTech MT MT 190 E 27	01/1997 → 08/1998
EuroTech MT MT 190 E 27 K	01/1997 → 08/1998
EuroTech MT MT 190 E 30	01/1997 → 08/1998
EuroTech MT MT 190 E 30 K	01/1997 → 08/1998
EuroTech MT MT 400 E 30 T	04/1992 → 08/1998
EuroTech MT MT 400 E 34 T	04/1992 → 08/1998
EuroTrakker MP 180 E 25 W	05/1999 → 11/2000
EuroTrakker MP 190 E 30 H	01/1993 → 07/2000
EuroTrakker MP 190 E 30 W	11/1999 → 07/2000
EuroTrakker MP 190 E 30 W	01/1993 → 07/2000
EuroTrakker MP 190 E 34 H	01/1993 → 07/2000
EuroTrakker MP 190 E 34 W	04/1993 → 11/2000
EuroTrakker MP 190 E 34 W	11/1999 → 07/2000
EuroTrakker MP 190 E 37 H	04/1993 → 11/2000
EuroTrakker MP 190 E 37 H	01/2000 → 11/2000
EuroTrakker MP 190 E 37 W	01/1993 → 11/2000
EuroTrakker MP 190 E 37 W	11/1999 → 11/2000
EuroTrakker MP 190 E 42 H	01/1993 → 11/2000
EuroTrakker MP 190 E 42 H	11/1999 → 11/2000
EuroTrakker MP 190 E 42 W	01/1993 → 11/2000
EuroTrakker MP 260 E 30 H	01/1993 → 07/2000
EuroTrakker MP 260 E 30 W	11/1999 → 07/2000
EuroTrakker MP 260 E 34 H	11/1999 → 07/2000
EuroTrakker MP 260 E 34 H	01/1993 → 07/2000
EuroTrakker MP 260 E 34 W	11/1999 → 07/2000
EuroTrakker MP 260 E 34 W	01/1993 → 07/2000
EuroTrakker MP 260 E 37 H	01/1993 → 07/2000
EuroTrakker MP 260 E 37 W	11/1999 → 12/2001
EuroTrakker MP 260 E 37 W	01/1993 → 07/2000
EuroTrakker MP 260 E 42 H	12/1994 → 12/2001
EuroTrakker MP 260 E 42 W	12/1994 → 12/2000
EuroTrakker MP 260 E 47 H	11/1999 → 12/2000
EuroTrakker MP 260 E 47 W	11/1999 → 12/2000
EuroTrakker MP 340 E 34 H	01/1993 → 12/2000
EuroTrakker MP 340 E 37 H	01/1993 → 12/2002
EuroTrakker MP 340 E 42 H	03/1995 → 12/2000
EuroTrakker MP 380 E 34 H	01/1993 → 12/2000
EuroTrakker MP 380 E 34 W	11/1999 → 07/2000
EuroTrakker MP 380 E 37 H	01/1993 → 12/2002
EuroTrakker MP 380 E 37 W	03/1995 → 12/2002
EuroTrakker MP 380 E 42 H	01/1993 → 12/2000




063534681240 MAN2006 80A 24V

IVECO			
EuroTrakker MP 380 E 42 W	01/1993	→	12/2000
EuroTrakker MP 380 E 47 H	11/1999	→	12/2000
EuroTrakker MP 380 E 47 W	11/1999	→	12/2000
EuroTrakker MP 400 E 34 HT	01/1993	→	12/2000
EuroTrakker MP 400 E 37 HT	01/1993	→	12/2000
EuroTrakker MP 400 E 37 WT	07/1994	→	12/2000
EuroTrakker MP 400 E 42 HT	01/1993	→	12/2000
EuroTrakker MP 400 E 42 WT	01/1993	→	12/2000
EuroTrakker MP 410 E 37 H	01/1993	→	11/2000
EuroTrakker MP 410 E 37 W	11/1999	→	11/2000
EuroTrakker MP 410 E 42 H	01/1993	→	11/2000
EuroTrakker MP 410 E 42 W	01/1993	→	11/2000
EuroTrakker MP 440 E 34 HT	01/1993	→	07/2000
EuroTrakker MP 440 E 37 HT	01/1993	→	11/2000
EuroTrakker MP 440 E 42 HT	01/1993	→	12/2000
EuroTrakker MP 720 E 37 HT	09/1993	→	12/1995
EuroTrakker MP 720 E 37 WT	09/1993	→	12/1995
EuroTrakker MP 720 E 42 HT	09/1993	→	12/2000
EuroTrakker MP 720 E 42 WT	01/1993	→	12/2000
EuroTrakker MP 720 E 47 HT	01/1993	→	12/2000
TurboStar 190-36	07/1990	→	12/1993
TurboStar 190-36 P	07/1990	→	12/1993
TurboStar 190-36 T	07/1990	→	12/1993
TurboStar 190-48	03/1989	→	12/1993
TurboStar 190-48 T	03/1989	→	12/1993
TurboTech 190-36	07/1990	→	12/1992
TurboTech 190-36 T	07/1990	→	12/1992
TurboTech 220-36 PT	07/1990	→	12/1992
TurboTech 240-36 P	07/1990	→	12/1992

063534681400 MAN2007 80A 24V

RENAULT TRUCKS			
Ares Ares	04/1998	→	
Iliade GT, GTC, GTE	04/1998	→	09/2001
Kerax 260.18	06/1997	→	02/2001
Kerax 260.18/B	06/1997	→	02/2001
Kerax 270.18	01/2001	→	04/2006
Kerax 300.18/B	06/1997	→	02/2001
Kerax 300.26/A,300.26/B	06/1997	→	02/2001
Kerax 300.26/B	06/1997	→	02/2001
Kerax 320.18	01/2001	→	02/2001
Kerax 320.26	01/2001	→	02/2001
Kerax 340.18	06/1997	→	02/2001
Kerax 340.18/B	06/1997	→	02/2001
Kerax 340.26	06/1997	→	01/2001




063534681400 MAN2007 80A 24V

RENAULT TRUCKS			
Kerax 340.26/A,340.26/B	06/1997	→	02/2001
Kerax 340.26/B	06/1997	→	02/2001
Kerax 340.32/A	06/1997	→	02/2001
Kerax 350.34	01/2003	→	12/2003
Kerax 370.18	01/2001	→	02/2001
Kerax 370.26	01/2001	→	02/2001
Kerax 370.32	01/2001	→	02/2001
Kerax 385.18	02/1998	→	02/2001
Kerax 385.18/B	02/1998	→	02/2001
Kerax 385.18T	02/1998	→	02/2001
Kerax 385.26	02/1998	→	02/2001
Kerax 385.26/A,385.26/B,385.26/C	02/1998	→	02/2001
Kerax 385.26/B	02/1998	→	02/2001
Kerax 385.26T	02/1998	→	02/2001
Kerax 385.32/A,385.32/B,385.32/C	02/1998	→	02/2001
Kerax 385.32/B	02/1998	→	02/2001
Kerax 400.18	01/2000	→	02/2001
Kerax 400.18T	01/2000	→	02/2001
Kerax 400.26	09/1998	→	02/2001
Kerax 400.26/A,400.26/B,400.26/C	01/2000	→	02/2001
Kerax 400.26/B	01/2000	→	02/2001
Kerax 400.26T	01/2000	→	02/2001
Kerax 400.32/A,400.32/B,400.32/C	01/2000	→	02/2001
Kerax 400.32/B	01/2000	→	02/2001
Kerax 420.18	01/2001	→	02/2001
Kerax 420.26	01/2001	→	02/2001
Kerax 420.34	01/2001	→	02/2001
Magnum AE 390.18	09/1996	→	05/2000
Magnum AE 390.18T	09/1996	→	05/2000
Magnum AE 390.19	09/1996	→	05/2000
Magnum AE 390.19T	09/1996	→	05/2000
Magnum AE 390.26	09/1996	→	05/2000
Magnum AE 420ti.18	04/1996	→	12/1996
Magnum AE 420ti.18T	04/1996	→	12/1996
Magnum AE 420ti.19	04/1996	→	12/1996
Magnum AE 420ti.19T	04/1996	→	12/1996
Magnum AE 420ti.22T	04/1996	→	10/1996
Magnum AE 420ti.24	04/1996	→	12/1996
Magnum AE 420ti.24T	04/1996	→	12/1996
Magnum AE 420ti.26	04/1996	→	12/1996
Magnum AE 420ti.26T	04/1996	→	12/1996
Magnum AE 430.18	09/1996	→	05/2000
Magnum AE 430.18T	09/1996	→	05/2000
Magnum AE 430.19	09/1996	→	05/2000

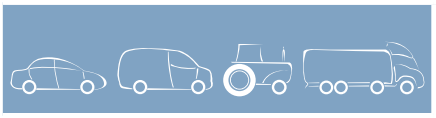


063534681400 MAN2007 80A 24V

RENAULT TRUCKS	
Magnum AE 430.19T	09/1996 → 05/2000
Magnum AE 430.26	09/1996 → 05/2000
Magnum AE 430.26T	01/1997 → 05/2000
Magnum AE 470.18	11/1996 → 05/2000
Magnum AE 470.18T	11/1996 → 05/2000
Magnum AE 470.19	11/1996 → 05/2000
Magnum AE 470.19T	11/1996 → 05/2000
Magnum AE 470.26	01/1997 → 05/2000
Magnum AE 470.26T	01/1998 → 05/2000
Magnum AE 560.18	04/1996 → 05/2000
Magnum AE 560.18T	04/1996 → 05/2000
Magnum AE 560.19	04/1996 → 05/2000
Magnum AE 560.19T	04/1996 → 05/2000
Magnum AE 560.26	04/1996 → 05/2000
Magnum AE 560.26T	01/1997 → 05/2000
Magnum E.TECH E.TECH 400.18	05/2000 → 02/2001
Magnum E.TECH E.TECH 400.18T	05/2000 → 02/2001
Magnum E.TECH E.TECH 400.24	05/2000 → 02/2001
Magnum E.TECH E.TECH 400.26	05/2000 → 02/2001
Magnum E.TECH E.TECH 440.18	05/2000 → 02/2001
Magnum E.TECH E.TECH 440.18T	05/2000 → 02/2001
Magnum E.TECH E.TECH 440.24	05/2000 → 02/2001
Magnum E.TECH E.TECH 440.26	05/2000 → 02/2001
Magnum E.TECH E.TECH 440.26T	05/2000 → 02/2001
Magnum E.TECH E.TECH 480.18	05/2000 → 02/2001
Magnum E.TECH E.TECH 480.18T	05/2000 → 02/2001
Magnum E.TECH E.TECH 480.24	05/2000 → 02/2001
Magnum E.TECH E.TECH 480.26	05/2000 → 02/2001
Magnum E.TECH E.TECH 480.26T	05/2000 → 02/2001
Midliner M 250.13/C	05/1996 → 01/2000
Midliner M 250.15/C,M 250.15/D	05/1996 → 01/2000
Midliner M 250.15C/T	05/1996 → 01/2000
Midliner M 250.16/D	05/1996 → 01/2000
Midlum 180	10/2001 → 04/2006
Midlum 135.08/B,150.08/B	02/2000 → 06/2001
Midlum 135.09/B,150.09/B	02/2000 → 06/2001
Midlum 135.10/B,150.10/B	02/2000 → 06/2001
Midlum 150.08/B	10/2001 → 04/2006
Midlum 150.10/B	10/2001 → 04/2006
Midlum 150.12/B	02/2000 → 06/2001
Midlum 180.08/B	02/2000 → 04/2006
Midlum 180.09/B	02/2000 → 06/2001
Midlum 180.10/B	02/2000 → 04/2006
Midlum 180.12	10/2001 → 04/2006

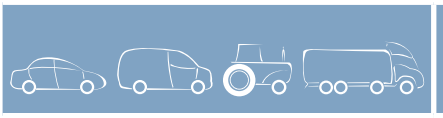


063534681400 MAN2007 80A 24V

RENAULT TRUCKS	
Midlum 180.12/B	02/2000 → 06/2001
Midlum 210.08/B	02/2000 → 06/2001
Midlum 210.09/B	02/2000 → 06/2001
Midlum 210.10/B	02/2000 → 06/2001
Midlum 210.12/C	02/2000 → 06/2001
Midlum 210.13/C	02/2000 → 06/2001
Midlum 210.14/C	02/2000 → 06/2001
Midlum 210.15/C	02/2000 → 06/2001
Midlum 210.16/C	02/2000 → 06/2001
Midlum 220.12	10/2001 → 04/2006
Midlum 220.14	10/2001 → 04/2006
Midlum 220.15	10/2001 → 04/2006
Midlum 220.18/D	10/2001 → 04/2006
Midlum 250.12/C	02/2000 → 06/2001
Midlum 250.13/C	02/2000 → 06/2001
Midlum 250.14/C	02/2000 → 06/2001
Midlum 250.15/C	02/2000 → 06/2001
Midlum 250.16/C	02/2000 → 06/2001
Midlum 250.16/CT	02/2000 → 06/2001
Midlum 270.12/C	10/2001 → 04/2006
Midlum 270.13/C	10/2001 → 04/2006
Midlum 270.14/C	10/2001 → 04/2006
Midlum 270.16/C	10/2001 → 04/2006
Premium Distribution 210.16	04/1996 → 09/2001
Premium Distribution 210.18D, 220.18	04/1996 → 09/2001
Premium Distribution 250.16	04/1996 → 09/2001
Premium Distribution 250.18D	04/1996 → 09/2001
Premium Distribution 250.19	04/1996 → 09/2001
Premium Distribution 260.16	04/1996 → 09/2001
Premium Distribution 260.18	04/1996 → 09/2001
Premium Distribution 260.19	04/1996 → 09/2001
Premium Distribution 300.16D	04/1996 → 09/2001
Premium Distribution 300.16T	04/1996 → 09/2001
Premium Distribution 300.18D	04/1996 → 09/2001
Premium Distribution 300.18D/T	04/1996 → 09/2001
Premium Distribution 300.19	04/1996 → 09/2001
Premium Distribution 300.19D/T	04/1996 → 09/2001
Premium Distribution 300.26D	04/1996 → 09/2001
Premium Distribution 320.18	08/2000 → 02/2001
Premium Distribution 320.18 D	08/2000 → 02/2001
Premium Distribution 320.24D	08/2000 → 02/2001
Premium Distribution 320.26D	08/2000 → 02/2001
Premium Distribution 340.18D	04/1996 → 03/2001
Premium Distribution 340.18D/T	04/1996 → 03/2001




063534681400 MAN2007 80A 24V

RENAULT TRUCKS	
Premium Distribution 340.19D	04/1996 → 03/2001
Premium Distribution 340.19D/T	04/1996 → 03/2001
Premium Distribution 340.26D	04/1996 → 03/2001
Premium Distribution 370.18	08/2000 → 02/2001
Premium Distribution 370.18D	08/2000 → 02/2001
Premium Distribution 370.24D	08/2000 → 02/2001
Premium Distribution 370.26D	11/2000 → 02/2001
Premium Distribution 400.18D	01/2000 → 03/2001
Premium Distribution 400.18D/T	01/2000 → 03/2001
Premium Distribution 420.18	11/2000 → 02/2001
Premium Distribution 420.18D	11/2000 → 02/2001
Premium Route 300.16	09/1996 → 09/2001
Premium Route 300.18	09/1996 → 09/2001
Premium Route 300.18T	09/1996 → 09/2001
Premium Route 300.19	09/1996 → 09/2001
Premium Route 300.19T	09/1996 → 09/2001
Premium Route 340.18	04/1996 → 03/2001
Premium Route 340.18T	04/1996 → 03/2001
Premium Route 340.19	04/1996 → 03/2001
Premium Route 340.19T	04/1996 → 03/2001
Premium Route 340.24	04/1996 → 03/2001
Premium Route 340.26	04/1996 → 03/2001
Premium Route 385.18,400.18	04/1996 → 03/2001
Premium Route 385.18T,400.18T	04/1996 → 03/2001
Premium Route 385.19,400.19	04/1996 → 03/2001
Premium Route 385.19T,400.19T	04/1996 → 03/2001
Premium Route 385.24,400.24	04/1996 → 03/2001
Premium Route 385.24T,400.24T	09/1996 → 03/2001
Premium Route 385.26	04/1996 → 03/2001
Premium Route 385.26,400.26	04/1996 → 03/2001

063534690370 MAN2008 55A 24V

IVECO	
491.18 2P	→
491.24 CITY CLASS 27	→
491.24 GNG	→

063534690480 MAN2009 55A 24V

IVECO	
EuroCargo 100 E 15	01/1991 → 08/2000
EuroCargo 100 E 15 K	01/1991 → 08/2000
EuroCargo 100 E 18	01/1991 → 11/2000
EuroCargo 100 E 18 K	01/1991 → 11/2000
EuroCargo 100 E 21	01/1991 → 11/2000
EuroCargo 120 E 15	12/1991 → 07/2000
EuroCargo 120 E 15 K	01/1992 → 07/2000




063534690480 MAN2009 55A 24V

IVECO	
EuroCargo 120 E 18	01/1992 → 07/2000
EuroCargo 120 E 18 K	01/1992 → 07/2000
EuroCargo 130 E 15	01/1994 → 07/2000
EuroCargo 130 E 15 K	01/1994 → 07/2000
EuroCargo 130 E 18	01/1992 → 07/2000
EuroCargo 130 E 18 K	01/1992 → 07/2000
EuroCargo 135 E 18 W	01/1997 → 07/2000
EuroCargo 135 E 18 WR	01/1994 → 12/1996
EuroCargo 150 E 15	01/1992 → 12/1996
EuroCargo 150 E 15 K	01/1992 → 12/1996
EuroCargo 150 E 18	01/1992 → 07/2000
EuroCargo 150 E 18 K	01/1992 → 07/2000
EuroCargo 170 E 18 K, 180 E 18 K	01/1994 → 07/2000
EuroCargo 170 E 18, 180 E 18	01/1994 → 07/2000
EuroCargo 180 E 21 T	04/1992 → 07/2000
EuroCargo 60 E 10	01/1991 → 05/1996
EuroCargo 60 E 12	01/1991 → 05/1996
EuroCargo 60 E 14	01/1991 → 05/1996
EuroCargo 60 E 14 K	01/1991 → 05/1996
EuroCargo 65 E 10	01/1991 → 05/1996
EuroCargo 65 E 10 K	01/1991 → 05/1996
EuroCargo 65 E 12	01/1991 → 05/1996
EuroCargo 65 E 12 K	01/1991 → 05/1996
EuroCargo 65 E 14	01/1991 → 06/1996
EuroCargo 65 E 14 K	01/1991 → 06/1996
EuroCargo 75 E 12	01/1991 → 05/1996
EuroCargo 75 E 14	01/1991 → 12/1993
EuroCargo 75 E 15 K	01/1991 → 12/1992
EuroCargo 75 E 15, 80 E 15	01/1991 → 12/1992
EuroCargo 80 E 15	01/1991 → 08/2000
EuroCargo 80 E 15 K	01/1991 → 08/2000
EuroCargo 80 E 18	01/1991 → 08/2000
EuroCargo 80 E 18 K	01/1991 → 08/2000
EuroCargo 80 E 21	01/1991 → 08/2000
EuroCargo 95 E 15 W	11/1993 → 08/2000
EuroCargo 95 E 21 W	11/1993 → 12/2000
M 115-17	01/1986 → 12/1991
M 115-17 H	01/1986 → 12/1991
M 135-17	01/1986 → 12/1991
M 135-17 H	01/1986 → 08/1992
M 135-17 T	01/1986 → 12/1991
M 145-17	02/1986 → 12/1991
M 175-17	09/1986 → 07/1992
M 175-24	09/1986 → 07/1992




063534690480 MAN2009 55A 24V	
IVECO	
M 175-24 T	09/1986 → 07/1992
MK 110-13 A	03/1986 → 12/1991
MK 110-16 A	03/1986 → 12/1991
MK 110-16 AH	03/1986 → 12/1991
MK 80-13 A	03/1986 → 12/1991
MK 80-13 AH	03/1986 → 12/1991
MK 80-13 AT	03/1986 → 12/1991
MK 80-13 AW	03/1986 → 12/1991
MK 80-16 A	03/1986 → 12/1991
MK 80-16 AW	03/1986 → 12/1989
MK 90-13 A	03/1986 → 12/1991
MK 90-13 AH	03/1986 → 12/1991
P/PA 190-30 H	09/1987 → 12/1992
P/PA 190-30 HT	01/1989 → 12/1992
P/PA 190-30 HW	09/1987 → 12/1992
P/PA 330-30 H	01/1988 → 12/1992
P/PA 330-30 HT	01/1988 → 12/1992
P/PA 330-30 HW	01/1988 → 12/1992
P/PA 330-36 H	01/1989 → 12/1992
P/PA 330-36 HT	10/1991 → 12/1992
P/PA 330-36 HW	10/1991 → 12/1992
P/PA-Haubenfahrzeuge 190-30 N	04/1987 → 12/1993
P/PA-Haubenfahrzeuge 190-30 NT	04/1987 → 12/1993
P/PA-Haubenfahrzeuge 330-30 N	10/1987 → 12/1992
P/PA-Haubenfahrzeuge 330-30 NW	10/1987 → 12/1992
TurboStar 190-33	07/1984 → 05/1987
TurboStar 190-33 P	01/1986 → 05/1987
TurboStar 190-33 T	07/1984 → 05/1987
TurboStar 190-36	07/1987 → 12/1993
TurboStar 190-36 P	07/1987 → 12/1993
TurboStar 190-36 T	07/1987 → 12/1993
TurboStar 190-42	07/1984 → 09/1986
TurboStar 190-42 T	07/1984 → 09/1986
TurboStar 190-48	03/1989 → 12/1993
TurboStar 190-48 T	03/1989 → 12/1993
TurboTech 190-26	01/1990 → 12/1992
TurboTech 190-26 T	01/1990 → 12/1992
TurboTech 190-32	01/1990 → 12/1992
TurboTech 190-32 T	01/1990 → 12/1992
TurboTech 190-36	07/1990 → 12/1992
TurboTech 190-36 T	07/1990 → 12/1992
TurboTech 220-36 PT	07/1990 → 12/1992
TurboTech 240-36 P	07/1990 → 12/1992
Zeta 109-14	11/1985 → 03/1991

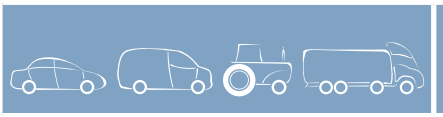


063534690480 MAN2009 55A 24V	
IVECO	
Zeta 109-14 H	11/1985 → 03/1991
Zeta 50-9	02/1990 → 03/1991
Zeta 50-9 H	02/1990 → 03/1991
Zeta 50-9 V	02/1990 → 03/1991
Zeta 65-12	01/1987 → 03/1991
Zeta 65-12 H	01/1987 → 03/1991
Zeta 65-12 V	01/1987 → 03/1991
Zeta 65-9	02/1990 → 03/1991
Zeta 79-14	12/1985 → 03/1991
Zeta 79-14 H	12/1985 → 03/1991
Zeta 79-14 V	12/1985 → 03/1991
Zeta A 60-9	09/1988 → 12/1992
Zeta A 70-14	05/1988 → 12/1992
063534696430 MAN2010 55A 24V	
SCANIA	
2 - series 112 H/280	01/1981 → 12/1986
2 - series 112 H/305	01/1981 → 12/1986
2 - series 112 M/305	01/1981 → 12/1986
2 - series 82 H/210	01/1981 → 12/1986
2 - series 82 M/190	10/1982 → 03/1988
2 - series 82 M/210	01/1981 → 12/1986
2 - series 92 H/245	01/1985 → 12/1988
2 - series 92 H/275	01/1985 → 12/1988
2 - series 92 M/245	01/1985 → 12/1988
2 - series 92 M/275	01/1985 → 12/1988
2 - series R 142 E	05/1980 → 03/1988
2 - series R 142 H	05/1980 → 03/1988
2 - series R 142 M	05/1980 → 03/1988
2 - series T 142 E	05/1980 → 03/1988
3 - series 113 E/320	11/1991 → 12/1996
3 - series 113 E/360	01/1990 → 12/1996
3 - series 113 E/380	01/1991 → 12/1996
3 - series 113 H/310	05/1988 → 12/1991
3 - series 113 H/320	05/1988 → 12/1989
3 - series 113 H/360	05/1988 → 12/1996
3 - series 113 H/380	01/1991 → 12/1996
3 - series 113 M/320	05/1988 → 12/1996
3 - series 113 M/360	05/1988 → 12/1996
3 - series 113 M/380	01/1991 → 12/1996
3 - series 113 M/400	01/1992 → 12/1996
3 - series 114 G/340	03/1998 →
3 - series 143 E/420	01/1991 → 12/1996
3 - series 143 E/450	01/1990 → 12/1996
3 - series 143 E/500	01/1991 → 12/1996




063534696430 MAN2010 55A 24V

SCANIA	
3 - series 143 H/400	05/1988 → 12/1991
3 - series 143 H/420	01/1991 → 12/1996
3 - series 143 H/450	05/1988 → 12/1996
3 - series 143 H/470	03/1988 → 05/1991
3 - series 143 H/500	01/1991 → 12/1996
3 - series 143 M/420	01/1991 → 12/1996
3 - series 143 M/450	05/1988 → 12/1996
3 - series 143 M/470	03/1988 → 05/1991
3 - series 143 M/500	01/1991 → 12/1996
3 - series 93 H/220	12/1991 → 12/1996
3 - series 93 H/250	03/1988 → 12/1996
3 - series 93 H/280	12/1991 → 12/1996
3 - series 93 M/210	03/1988 → 12/1991
3 - series 93 M/220	12/1991 → 12/1996
3 - series 93 M/230	03/1988 → 12/1991
3 - series 93 M/250	03/1988 → 12/1996
3 - series 93 M/280	03/1988 → 12/1996
3 - series T 113 E/320	01/1990 → 12/1996
3 - series T 113 E/360	01/1990 → 12/1996
3 - series T 113 H/320	01/1990 → 12/1996
3 - series T 113 H/360	01/1990 → 12/1996
3 - series T 143 E/420	01/1991 → 12/1996
3 - series T 143 E/450	01/1990 → 12/1996
3 - series T 143 E/500	01/1991 → 12/1996
3 - series T 143 H/420	01/1991 → 12/1996
3 - series T 143 H/450	01/1990 → 12/1996
3 - series T 143 H/500	01/1991 → 12/1996
3 - series T 93 H/250	01/1990 → 12/1996
3 - series T 93 H/280	12/1991 → 12/1996
3 - series bus K 93 CL	01/1991 → 12/1996

063534699820 MAN2011 55A 24V

DAF	
65 FA 65.180	03/1993 → 02/1998
65 FA 65.210	03/1993 → 02/1998
65 FAV 65.180	03/1993 → 02/1998
65 FAV 65.210	03/1993 → 02/1998
75 FA 75.240	07/1992 → 02/1998
75 FA 75.270	07/1992 → 02/1998
75 FA 75.300	07/1992 → 02/1998
75 FAG 75.240,FAN 75.240	07/1992 → 02/1998
75 FAG 75.270,FAN 75.270	07/1992 → 02/1998
75 FAG 75.300,FAN 75.300	07/1992 → 02/1998
75 FAR 75.240,FAS 75.240	07/1992 → 02/1998
75 FAR 75.270,FAS 75.270	07/1992 → 02/1998




063534699820 MAN2011 55A 24V

DAF	
75 FAR 75.300,FAS 75.300	07/1992 → 02/1998
75 FAT 75.270	07/1992 → 02/1998
75 FAV 75.240	07/1992 → 02/1998
75 FAV 75.270	07/1992 → 02/1998
75 FT 75.240	07/1992 → 02/1998
75 FT 75.270	07/1992 → 02/1998
75 FT 75.300	07/1992 → 02/1998
85 FA 85.330	10/1992 → 12/1997
85 FA 85.360	10/1992 → 12/1997
85 FA 85.400	03/1995 → 12/1997
85 FAD 85.330	10/1992 → 12/1997
85 FAD 85.360	10/1992 → 12/1997
85 FAD 85.400	03/1995 → 12/1997
85 FAG 85.330,FAR 85.330,FAS 85.330	10/1992 → 12/1997
85 FAG 85.360,FAR 85.360,FAS 85.360	10/1992 → 12/1997
85 FAG 85.400,FAR 85.400,FAS 85.400	03/1995 → 12/1997
85 FAT 85.330	10/1992 → 12/1997
85 FAT 85.360	10/1992 → 12/1997
85 FAT 85.400	03/1995 → 12/1997
85 FT 85.330	10/1992 → 12/1997
85 FT 85.360	10/1992 → 12/1997
85 FT 85.400	03/1995 → 12/1997
85 FTG 85.330	10/1992 → 12/1997
85 FTG 85.360	10/1992 → 12/1997
85 FTG 85.400	03/1995 → 12/1997
85 FTT 85.330	10/1992 → 12/1997
85 FTT 85.360	10/1992 → 12/1997
85 FTT 85.400	03/1995 → 12/1997

MAN	
E 2000 19.310 FALK	05/2000 → 06/2003
E 2000 19.310 FALS	05/2000 → 06/2003
E 2000 19.310 FLK	05/2000 → 06/2003
E 2000 19.310 FLS	05/2000 → 06/2003
E 2000 19.360 FALK	07/2001 → 06/2003
E 2000 19.360 FALS	07/2001 → 06/2003
E 2000 19.360 FLK	07/2001 → 06/2003
E 2000 19.360 FLS	07/2001 → 06/2003
E 2000 19.410 FALK	07/2001 → 06/2003
E 2000 19.410 FALS	07/2001 → 06/2003
E 2000 19.410 FLK	07/2001 → 06/2003
E 2000 19.410 FLS	07/2001 → 06/2003
E 2000 19.460 FALK	07/2001 → 06/2003
E 2000 19.460 FALS	07/2001 → 06/2003
E 2000 19.460 FLK	07/2001 → 06/2003

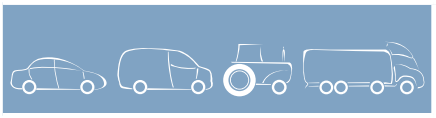



063534699820 MAN2011 55A 24V

MAN	
E 2000 19.460 FLS	07/2001 → 06/2003
E 2000 26.360 FAVLC	05/2000 → 10/2003
E 2000 26.360 FAVLK	05/2000 → 10/2003
E 2000 26.410 DFARC	05/2000 → 10/2003
E 2000 26.410 DFRC, FAVLC	05/2000 → 10/2003
E 2000 26.410 FAVLK	05/2000 → 10/2003
E 2000 26.460 DFARC	05/2000 → 10/2003
E 2000 26.460 DFLRS	05/2000 → 10/2003
E 2000 26.460 FAVLC	05/2000 → 10/2003
E 2000 26.460 FAVLK	05/2000 → 10/2003
E 2000 28.310 FNLC	09/2002 → 12/2003
E 2000 28.360 FANLC	05/2000 → 11/2003
E 2000 28.360 FANLK	05/2000 → 11/2003
E 2000 28.360 FNALC	05/2000 → 11/2003
E 2000 28.360 FNLC	05/2000 → 11/2003
E 2000 28.410 FANLC	05/2000 → 11/2003
E 2000 28.410 FANLK	05/2000 → 11/2003
E 2000 28.410 FNLC	05/2000 → 11/2003
E 2000 28.460 FANLC	05/2000 → 11/2003
E 2000 28.460 FANLK	05/2000 → 11/2003
E 2000 28.460 FNLC	05/2000 → 11/2003
E 2000 30.310 FNLC	05/2000 → 06/2002
E 2000 30.360 FANLC	05/2000 → 06/2003
E 2000 30.360 FANLK	05/2000 → 06/2003
E 2000 30.360 FNLC	05/2000 → 06/2003
E 2000 30.410 FANLC	05/2000 → 06/2003
E 2000 30.410 FANLK	05/2000 → 06/2003
E 2000 30.410 FNLC	05/2000 → 06/2003
E 2000 30.460 FANLC	05/2000 → 06/2003
E 2000 30.460 FANLK	05/2000 → 06/2003
E 2000 30.460 FNLC	05/2000 → 06/2003
E 2000 32.310 VFLC	05/2000 → 08/2002
E 2000 32.310 VFNLC	05/2000 → 08/2002
E 2000 32.360 VFLC	05/2000 → 10/2003
E 2000 32.360 VFNLC	05/2000 → 10/2003
E 2000 32.410 VFARK	05/2000 → 10/2003
E 2000 32.410 VFLC,VFRC, VFLRC	05/2000 → 10/2003
E 2000 32.410 VFNLC	05/2000 → 10/2003
E 2000 32.460 VFLC, VFLRC	05/2000 → 10/2003
E 2000 32.460 VFNLC	05/2000 → 10/2003
E 2000 33.360 DFAK, DFALK	05/2000 → 06/2003
E 2000 33.360 DFALC	05/2000 → 06/2003
E 2000 33.360 DFALS	04/2001 → 06/2003
E 2000 33.360 DFLC	05/2000 → 06/2003

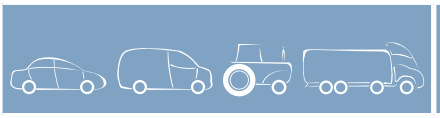



063534699820 MAN2011 55A 24V

MAN	
E 2000 33.360 DFLK	05/2000 → 06/2003
E 2000 33.360 DFLS	05/2000 → 06/2003
E 2000 33.410 DFAK, DFALK	05/2000 → 06/2003
E 2000 33.410 DFALC	05/2000 → 06/2003
E 2000 33.410 DFALS	04/2001 → 06/2003
E 2000 33.410 DFLC	05/2000 → 06/2003
E 2000 33.410 DFLK	05/2000 → 06/2003
E 2000 33.410 DFLS	05/2000 → 06/2003
E 2000 33.460 DFAK, DFALK	05/2000 → 06/2003
E 2000 33.460 DFALC	05/2000 → 06/2003
E 2000 33.460 DFALS	04/2001 → 06/2003
E 2000 33.460 DFLC	05/2000 → 06/2003
E 2000 33.460 DFLK	05/2000 → 06/2003
E 2000 33.460 DFLS	05/2000 → 06/2003
E 2000 35.360 VFAK	05/2000 → 09/2003
E 2000 35.410 FVNLC	05/2000 → 10/2003
E 2000 35.410 VFAK	05/2000 → 10/2003
E 2000 35.460 FVNLC	05/2000 → 10/2003
E 2000 35.460 VFAK	05/2000 → 10/2003
E 2000 41.410 VFAK	05/2000 → 09/2003
E 2000 41.460 DFVS, DFVLS	06/2000 → 09/2003
E 2000 41.460 VFAK	05/2000 → 09/2003
E 2000 50.410 VFAK	05/2000 → 09/2003
E 2000 50.410 VFAVK, VFAV-G	03/2001 → 09/2003
E 2000 50.410 VFK	05/2000 → 09/2003
E 2000 50.410 VFVK, VFV-G	10/2000 → 09/2003
E 2000 50.460 VFAK	05/2000 → 09/2003
E 2000 50.460 VFAVK, VFAV-G	03/2001 → 09/2003
E 2000 50.460 VFK	05/2000 → 09/2003
E 2000 50.460 VFVK, VFV-G	10/2000 → 09/2003
EM EM 192	10/1993 → 06/1997
F 2000 19.233 FCNG	09/1996 → 12/2001
F 2000 19.233 FKNG	01/1994 → 12/2001
F 2000 19.273 F, FL, FLL	01/1994 → 12/1995
F 2000 19.273 FA	01/1994 → 12/1995
F 2000 19.273 FAK	01/1994 → 12/1995
F 2000 19.273 FK	01/1994 → 12/1995
F 2000 19.273 FS,19.273 FLS	01/1994 → 12/1995
F 2000 19.293 FAC	04/1995 → 01/2000
F 2000 19.293 FAK	04/1995 → 01/2000
F 2000 19.293 FAS	04/1995 → 01/2000
F 2000 19.293 FC,19.293 FLC,19.293 FLLC	04/1995 → 01/2000
F 2000 19.293 FK,19.293 FLK	04/1995 → 01/2000
F 2000 19.293 FS,19.293 FLS,19.293 FLLS	04/1995 → 01/2000




063534699820 MAN2011 55A 24V

MAN	
F 2000 19.314 FAC	05/2001 → 08/2002
F 2000 19.314 FAK, FA-KI	05/2001 → 08/2002
F 2000 19.314 FAS	06/1998 → 12/2001
F 2000 19.314 FC, FLC, FLLC, FLLW, FRC, FLRC, FLLRC, FLL, FLLR, F-N	06/1998 → 12/2001
F 2000 19.314 FK, FLK, F-KI, FL-KI	06/1998 → 12/2001
F 2000 19.314 FS, FLS, FLLS, FRS, FLRS, FLLRS	06/1998 → 12/2001
F 2000 19.323 FAC	01/1994 → 12/1995
F 2000 19.323 FAK	01/1994 → 12/1995
F 2000 19.323 FAS	01/1994 → 12/1995
F 2000 19.323 FC,19.323 FLC,19.323 FLLC	01/1994 → 12/1995
F 2000 19.323 FK,19.323 FLK	01/1994 → 12/1995
F 2000 19.323 FS,19.323 FLS,19.323 FLLS	01/1994 → 12/1995
F 2000 19.343 FAC	01/1994 → 01/2000
F 2000 19.343 FAK	01/1994 → 09/2001
F 2000 19.343 FAS	01/1994 → 01/2000
F 2000 19.343 FC,19.343 FLC,19.343 FLLC	01/1994 → 09/2001
F 2000 19.343 FK,19.343 FLK	01/1994 → 09/2001
F 2000 19.343 FS,19.343 FLS,19.343 FLLS	01/1994 → 09/2001
F 2000 19.364 FAC	06/1998 → 12/2001
F 2000 19.364 FAK, FA-KI	06/1998 → 09/2001
F 2000 19.364 FAS	06/1998 → 09/2001
F 2000 19.364 FC, FLC, FLLC, FLLW, FRC, FLRC, FLLRC, FLL, FLLR, F-N	06/1998 → 09/2001
F 2000 19.364 FK, FLK, F-KI, FL-KI	06/1998 → 12/2001
F 2000 19.364 FS, FLS, FLLS, FRS, FLRS, FLLRS	06/1998 → 12/2001
F 2000 19.373 FAC	01/1994 → 12/1995
F 2000 19.373 FAK, FA-KI	01/1994 → 12/1995
F 2000 19.373 FAS	01/1994 → 12/1995
F 2000 19.373 FC, FLC, FLLC, FRC, FLRC, F-NL	01/1994 → 09/2001
F 2000 19.373 FK, FLK, F-KI, FL-KI	01/1994 → 12/1995
F 2000 19.373 FS, FLS, FLLS, FRS, FLRS, FLLRS	01/1994 → 12/1995
F 2000 19.403 FAC	06/1996 → 12/2001
F 2000 19.403 FAK, FA-KI	06/1996 → 09/2001
F 2000 19.403 FAS	01/1994 → 12/2001
F 2000 19.403 FC, FLC, FLLC, FRC, FLRC, F-NL	01/1994 → 09/2001
F 2000 19.403 FK, FLK, F-KI, FL-KI	01/1994 → 12/2001
F 2000 19.403 FS, FLS, FLLS, FRS, FLRS, FLLRS	01/1994 → 09/2001




063534699820 MAN2011 55A 24V

MAN	
F 2000 19.414 FAC	06/1998 → 12/2001
F 2000 19.414 FAK, FA-KI	06/1998 → 12/2001
F 2000 19.414 FAS	06/1998 → 12/2001
F 2000 19.414 FC, FLC, FLLC, FRC, FLRC, FLLRC, FLL, FLLR, F-NL	06/1998 → 12/2001
F 2000 19.414 FK, FLK, F-KI, FL-KI	06/1998 → 12/2001
F 2000 19.414 FS, FLS, FLLS, FRS, FLRS, FLLRS	06/1998 → 12/2001
F 2000 19.423 FAC	01/1994 → 12/1995
F 2000 19.423 FAK, FA-KI	01/1994 → 12/1995
F 2000 19.423 FAS	01/1994 → 12/1995
F 2000 19.423 FC, FLC, FLLC, F-NL	01/1994 → 12/1995
F 2000 19.423 FK, FLK, F-KI, FL-KI	01/1994 → 12/1995
F 2000 19.423 FS, FLS, FLLS	01/1994 → 12/1995
F 2000 19.463 FAC	01/1994 → 12/2001
F 2000 19.463 FAK, FA-KI	01/1994 → 09/2001
F 2000 19.463 FAS	01/1994 → 12/2001
F 2000 19.463 FC, FLC, FLLC, FRC, FLRC, F-NL	01/1994 → 09/2001
F 2000 19.463 FK, FLK, F-KI, FL-KI	01/1994 → 09/2001
F 2000 19.463 FS, FLS, FLLS, FRS, FLRS, FLLRS	01/1994 → 09/2001
F 2000 19.464 FAC	06/1998 → 12/2002
F 2000 19.464 FAK, FA-KI	06/1998 → 07/2001
F 2000 19.464 FAS	06/1998 → 09/2001
F 2000 19.464 FC, FLC, FLLC, FLL, FRC, FLLR, FLLRC, FLLW, F-NL	06/1998 → 07/2001
F 2000 19.464 FK, FLK, F-KI, FL-KI	06/1998 → 09/2001
F 2000 19.464 FS, FLS, FLLS, FRS, FLRS, FLLRS	06/1998 → 07/2001
F 2000 23.293 FNLLC	04/1995 → 01/2000
F 2000 23.314 FNLLC	05/2001 → 12/2002
F 2000 23.343 FNLLC	01/1994 → 01/2000
F 2000 23.364 FNLLC	05/2001 → 12/2002
F 2000 23.403 FNLLC	01/1994 → 09/2001
F 2000 23.463 FNLLC	01/1994 → 09/2001
F 2000 24.273 FNLLC	01/1994 → 12/1995
F 2000 24.293 FNLLC	01/1994 → 01/2000
F 2000 24.314 FNLLRC	05/2001 → 08/2002
F 2000 24.323 FNLLC	01/1994 → 12/1995
F 2000 24.343 FNLLC	01/1994 → 01/2000
F 2000 24.364 FNLLRC	05/2001 → 09/2001
F 2000 24.373 FNLLC	01/1994 → 12/1995
F 2000 24.403 FNLLC	01/1994 → 09/2001





063534699820 MAN2011 55A 24V

MAN	
F 2000 24.414 FNLLRC	05/2001 → 12/2001
F 2000 24.423 FNLLC	01/1994 → 12/1995
F 2000 24.463 FNLLC	01/1994 → 09/2001
F 2000 24.464 FNLLRC	05/2001 → 09/2001
F 2000 26.233 FVLCNG	09/1996 → 08/2002
F 2000 26.233 FVL-KO	03/2000 → 08/2002
F 2000 26.273 DFC,26.273 DFLC	01/1994 → 12/1995
F 2000 26.273 DFK,26.273 DFLK	01/1994 → 12/1995
F 2000 26.273 DFS,26.273 DFLS	01/1994 → 12/1995
F 2000 26.273 FNLC,26.273 FNLLC,26.273 FVLC	01/1994 → 12/1995
F 2000 26.273 FNLS,26.273 FVLS	01/1994 → 12/1995
F 2000 26.293 DFC,26.293 DFLC	04/1995 → 01/2000
F 2000 26.293 DFK,26.293 DFLK	04/1995 → 01/2000
F 2000 26.293 DFS,26.293 DFLS	04/1995 → 01/2000
F 2000 26.293 FNLC,26.293 FNLLC,26.293 FVLC	04/1995 → 09/2001
F 2000 26.293 FNLS,26.293 FVLS	04/1995 → 09/2001
F 2000 26.314 DFC, DFLC	05/2001 → 06/2003
F 2000 26.314 DFK, DFLK	05/2001 → 06/2003
F 2000 26.314 DFS, DFLS	05/2001 → 06/2003
F 2000 26.314 DF-TM	05/2001 → 06/2003
F 2000 26.314 FNLC, FNLLC, FNLLRC, FNLLW, FVLC	05/2001 → 06/2003
F 2000 26.314 FNLS	05/2001 → 06/2003
F 2000 26.314 FVL-KO	05/2001 → 06/2003
F 2000 26.314 FVLS, FVLRS	05/2001 → 06/2003
F 2000 26.323 DFC,26.323 DFLC	01/1994 → 12/1995
F 2000 26.323 DFK,26.323 DFLK	01/1994 → 12/1995
F 2000 26.323 DFS,26.323 DFLS	01/1994 → 12/1995
F 2000 26.323 FNLC,26.323 FNLLC,26.323 FVLC	01/1994 → 12/1995
F 2000 26.323 FNLS,26.323 FVLS	01/1994 → 12/1995
F 2000 26.343 DFC,26.343 DFLC	01/1994 → 01/2000
F 2000 26.343 DFK,26.343 DFLK	01/1994 → 01/2000
F 2000 26.343 DFS,26.343 DFLS	01/1994 → 01/2000
F 2000 26.343 FNLC,26.343 FNLLC,26.343 FVLC	01/1994 → 01/2000
F 2000 26.343 FNLS,26.343 FVLS	01/1994 → 01/2000
F 2000 26.364 DFC, DFLC	05/2001 → 06/2003
F 2000 26.364 DFK, DFLK	05/2001 → 06/2003
F 2000 26.364 DFS, DFLS	05/2001 → 06/2003
F 2000 26.364 DF-TM	05/2001 → 06/2003
F 2000 26.364 FNLC, FNLLC, FNLLRC, FNLLW, FVLC	05/2001 → 06/2003

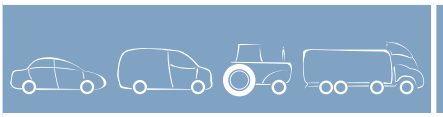



063534699820 MAN2011 55A 24V

MAN	
F 2000 26.364 FNLS	05/2001 → 06/2003
F 2000 26.364 FVL-KO	05/2001 → 06/2003
F 2000 26.364 FVLS, FVLRS	05/2001 → 06/2003
F 2000 26.373 DFC,26.373 DFLC	01/1994 → 12/1995
F 2000 26.373 DFK,26.373 DFLK	01/1994 → 12/1995
F 2000 26.373 DFS,26.373 DFLS	01/1994 → 12/1995
F 2000 26.373 FNLC,26.373 FNLLC,26.373 FVLC	01/1994 → 12/1995
F 2000 26.373 FNLS,26.373 FVLS	01/1994 → 12/1995
F 2000 26.403 DFC,26.403 DFLC	01/1994 → 08/2001
F 2000 26.403 DFK,26.403 DFLK	01/1994 → 08/2001
F 2000 26.403 DFS,26.403 DFLS	01/1994 → 08/2001
F 2000 26.403 FNLC,26.403 FNLLC,26.403 FVLC	01/1994 → 08/2001
F 2000 26.403 FNLS,26.403 FVLS	01/1994 → 08/2001
F 2000 26.414 DFC, DFLC	05/2001 → 09/2002
F 2000 26.414 DFK, DFLK	05/2001 → 09/2002
F 2000 26.414 DFS, DFLS	05/2001 → 09/2002
F 2000 26.414 DF-TM	05/2001 → 09/2002
F 2000 26.414 FNLC, FNLLC, FNLLRC, FNLLW, FVLC	05/2001 → 09/2002
F 2000 26.414 FNLS	05/2001 → 09/2002
F 2000 26.414 FVL-KO	05/2001 → 09/2002
F 2000 26.414 FVLS, FVLRS	05/2001 → 09/2002
F 2000 26.423 DFC,26.423 DFLC	01/1994 → 12/1995
F 2000 26.423 DFK,26.423 DFLK	01/1994 → 12/1995
F 2000 26.423 DFS,26.423 DFLS	01/1994 → 12/1995
F 2000 26.423 FNLC,26.423 FNLLC,26.423 FVLC	01/1994 → 12/1995
F 2000 26.423 FNLS,26.423 FVLS	01/1994 → 12/1995
F 2000 26.463 DFC, DFLC	01/1994 → 08/2001
F 2000 26.463 DFK,26.463 DFLK	01/1994 → 08/2001
F 2000 26.463 DFS,26.463 DFLS	01/1994 → 08/2001
F 2000 26.463 FNLC, FNLLC, FVLC	01/1994 → 09/2001
F 2000 26.463 FNLS,26.463 FVLS	01/1994 → 09/2001
F 2000 26.464 DFC, DFLC	05/2001 → 09/2002
F 2000 26.464 DFK, DFLK	05/2001 → 09/2002
F 2000 26.464 DFS, DFLS	05/2001 → 09/2002
F 2000 26.464 DF-TM	05/2001 → 09/2002
F 2000 26.464 FNLS	05/2001 → 09/2002
F 2000 26.464 FVL-KO	05/2001 → 09/2002
F 2000 26.464 FVLS, FVLRS	05/2001 → 09/2002
F 2000 27.273 DFAC	01/1994 → 12/1995
F 2000 27.273 DFAK	01/1994 → 12/1995




063534699820 MAN2011 55A 24V

MAN	
F 2000 27.273 DFAS	01/1994 → 12/1995
F 2000 27.273 DFC	01/1994 → 12/1995
F 2000 27.273 DFK	01/1994 → 12/1995
F 2000 27.273 DFS	01/1994 → 12/1995
F 2000 27.293 DFAC	04/1995 → 01/2000
F 2000 27.293 DFAK	04/1995 → 01/2000
F 2000 27.293 DFAS	04/1995 → 01/2000
F 2000 27.293 DFC	04/1995 → 01/2000
F 2000 27.293 DFK	04/1995 → 01/2000
F 2000 27.293 DFS	04/1995 → 01/2000
F 2000 27.314 DFAC	05/2001 → 08/2002
F 2000 27.314 DFAK, DFA-KI	05/2001 → 08/2002
F 2000 27.314 DFAS	05/2001 → 08/2002
F 2000 27.314 DFC	05/2001 → 08/2002
F 2000 27.314 DFK, DF-KI	05/2001 → 08/2002
F 2000 27.314 DFS	05/2001 → 08/2002
F 2000 27.314 DF-TM	05/2001 → 08/2002
F 2000 27.314 FVL	01/2000 → 08/2002
F 2000 27.323 DFAC	01/1994 → 12/1995
F 2000 27.323 DFAK, DFA-KI	01/1994 → 12/1995
F 2000 27.323 DFAS	01/1994 → 12/1995
F 2000 27.323 DFC	01/1994 → 12/1995
F 2000 27.323 DFK, DF-KI	01/1994 → 12/1995
F 2000 27.323 DFS	01/1994 → 12/1995
F 2000 27.343 DFAC	01/1994 → 01/2000
F 2000 27.343 DFAK	01/1994 → 01/2000
F 2000 27.343 DFAS	01/1994 → 01/2000
F 2000 27.343 DFC	01/1994 → 01/2000
F 2000 27.343 DFK	01/1994 → 01/2000
F 2000 27.343 DFS	01/1994 → 01/2000
F 2000 27.364 DFAC	05/2001 → 09/2002
F 2000 27.364 DFAK, DFA-KI	05/2001 → 09/2002
F 2000 27.364 DFAS	05/2001 → 09/2002
F 2000 27.364 DFC	05/2001 → 09/2002
F 2000 27.364 DFK, DF-KI	05/2001 → 09/2002
F 2000 27.364 DFS	05/2001 → 09/2002
F 2000 27.364 DF-TM	05/2001 → 09/2002
F 2000 27.364 FVL	07/1999 → 09/2002
F 2000 27.373 DFAC	01/1994 → 12/1995
F 2000 27.373 DFAK, DFA-KI	01/1994 → 12/1995
F 2000 27.373 DFAS	01/1994 → 12/1995
F 2000 27.373 DFC	01/1994 → 12/1995
F 2000 27.373 DFK, DF-KI	01/1994 → 12/1995
F 2000 27.373 DFS	01/1994 → 12/1995




063534699820 MAN2011 55A 24V

MAN	
F 2000 27.403 DFAC	01/1994 → 09/2001
F 2000 27.403 DFAK, DFA-KI	01/1994 → 09/2001
F 2000 27.403 DFAS	01/1994 → 09/2001
F 2000 27.403 DFC	01/1994 → 09/2001
F 2000 27.403 DFK, DF-KI	01/1994 → 09/2001
F 2000 27.403 DFS	01/1994 → 09/2001
F 2000 27.414 DFAC	05/2001 → 08/2002
F 2000 27.414 DFAK, DFA-KI	05/2001 → 08/2002
F 2000 27.414 DFAS	05/2001 → 08/2002
F 2000 27.414 DFC	05/2001 → 08/2002
F 2000 27.414 DFK, DF-KI	05/2001 → 08/2002
F 2000 27.414 DFS	05/2001 → 08/2002
F 2000 27.414 DF-TM	05/2001 → 08/2002
F 2000 27.414 FVL	01/2000 → 08/2002
F 2000 27.423 DFAC	01/1994 → 12/1995
F 2000 27.423 DFAK, DFA-KI	01/1994 → 12/1995
F 2000 27.423 DFAS	01/1994 → 12/1995
F 2000 27.423 DFC	01/1994 → 12/1995
F 2000 27.423 DFK, DF-KI	01/1994 → 12/1995
F 2000 27.423 DFS	01/1994 → 12/1995
F 2000 27.463 DFAC	01/1994 → 09/2001
F 2000 27.463 DFAK, DFA-KI	01/1994 → 09/2001
F 2000 27.463 DFAS	01/1994 → 09/2001
F 2000 27.463 DFC	01/1994 → 09/2001
F 2000 27.463 DFK, DF-KI	01/1994 → 09/2001
F 2000 27.463 DFS	01/1994 → 09/2001
F 2000 27.463 DF-TM	07/2000 → 08/2002
F 2000 27.464 DFAC	05/2001 → 08/2002
F 2000 27.464 DFAK, DFA-KI	05/2001 → 08/2002
F 2000 27.464 DFAS	05/2001 → 08/2002
F 2000 27.464 DFK, DF-KI	05/2001 → 08/2002
F 2000 27.464 DFS	01/1994 → 09/2001
F 2000 27.464 DF-TM	05/2001 → 08/2002
F 2000 27.464 FVL	01/2000 → 08/2002
F 2000 32.293 VFC	08/1995 → 01/2000
F 2000 32.314 VF, VFC	05/2001 → 12/2001
F 2000 32.314 VFK, VF-HK	05/2001 → 12/2001
F 2000 32.314 VF-TM	05/2001 → 12/2001
F 2000 32.343 VFC	08/1995 → 01/2000
F 2000 32.343 VFK	08/1995 → 01/2000
F 2000 32.364 VF, VFC	05/2001 → 09/2001
F 2000 32.364 VFK, VF-HK	05/2001 → 09/2001
F 2000 32.364 VF-TM	05/2001 → 09/2002
F 2000 32.403 VFC	08/1995 → 09/2001




063534699820 MAN2011 55A 24V

MAN	
F 2000 32.403 VFK	08/1995 → 09/2001
F 2000 32.414 VF, VFC	05/2001 → 12/2001
F 2000 32.414 VFK, VF-HK	05/2001 → 12/2001
F 2000 32.414 VF-TM	05/2001 → 12/2001
F 2000 32.463 VFC	08/1995 → 09/2001
F 2000 32.463 VFK	08/1995 → 09/2001
F 2000 32.464 VF, VFC	05/2001 → 12/2001
F 2000 32.464 VFK, VF-HK	05/2001 → 12/2001
F 2000 32.464 VF-TM	05/2001 → 12/2001
F 2000 33.323 DFAC	01/1994 → 12/1995
F 2000 33.323 DFAK	01/1994 → 12/1995
F 2000 33.323 DFAS	01/1994 → 12/1995
F 2000 33.323 DFC	01/1994 → 12/1995
F 2000 33.323 DFK	01/1994 → 12/1995
F 2000 33.323 DFS	01/1994 → 12/1995
F 2000 33.343 DFAC	01/1994 → 01/2000
F 2000 33.343 DFAK	01/1994 → 01/2000
F 2000 33.343 DFAS	01/1994 → 01/2000
F 2000 33.343 DFC	01/1994 → 01/2000
F 2000 33.343 DFK	01/1994 → 01/2000
F 2000 33.343 DFS	01/1994 → 01/2000
F 2000 33.364 DFAC	05/2001 → 09/2001
F 2000 33.364 DFAK, DFA-KI	05/2001 → 09/2001
F 2000 33.364 DFAS	05/2001 → 09/2001
F 2000 33.364 DFC	05/2001 → 09/2001
F 2000 33.364 DFK, DF-KI	05/2001 → 09/2001
F 2000 33.364 DFS, DFRS	05/2001 → 09/2001
F 2000 33.373 DFAC	01/1994 → 12/1995
F 2000 33.373 DFAK, DFA-KI	01/1994 → 12/1995
F 2000 33.373 DFAS	01/1994 → 12/1995
F 2000 33.373 DFC	01/1994 → 12/1995
F 2000 33.373 DFK, DF-KI	01/1994 → 12/1995
F 2000 33.373 DFS, DFRS	01/1994 → 12/1995
F 2000 33.403 DFAC	01/1994 → 09/2001
F 2000 33.403 DFAK, DFA-KI	01/1994 → 09/2001
F 2000 33.403 DFAS	01/1994 → 09/2001
F 2000 33.403 DFC	01/1994 → 09/2001
F 2000 33.403 DFK, DF-KI	01/1994 → 09/2001
F 2000 33.403 DFS, DFRS	01/1994 → 09/2001
F 2000 33.414 DFAC	05/2001 → 08/2002
F 2000 33.414 DFAK, DFA-KI	05/2001 → 08/2002
F 2000 33.414 DFAS	05/2001 → 08/2002
F 2000 33.414 DFC	05/2001 → 08/2002
F 2000 33.414 DFK, DF-KI	05/2001 → 08/2002

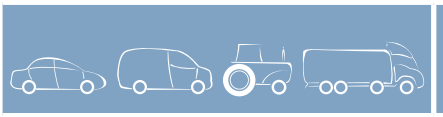


063534699820 MAN2011 55A 24V

MAN	
F 2000 33.414 DFS, DFRS	05/2001 → 08/2002
F 2000 33.423 DFAC	01/1994 → 12/1995
F 2000 33.423 DFAK, DFA-KI	01/1994 → 12/1995
F 2000 33.423 DFAS	01/1994 → 12/1995
F 2000 33.423 DFC	01/1994 → 12/1995
F 2000 33.423 DFK, DF-KI	01/1994 → 12/1995
F 2000 33.423 DFS, DFRS	01/1994 → 12/1995
F 2000 33.463 DFAC	01/1994 → 09/2001
F 2000 33.463 DFAK, DFA-KI	01/1994 → 09/2001
F 2000 33.463 DFAS	01/1994 → 09/2001
F 2000 33.463 DFC	01/1994 → 09/2001
F 2000 33.463 DFK, DF-KI	01/1994 → 09/2001
F 2000 33.463 DFS, DFRS	01/1994 → 09/2001
F 2000 33.464 DFAC	05/2001 →
F 2000 33.464 DFAK, DFA-KI	05/2001 →
F 2000 33.464 DFAS	05/2001 →
F 2000 33.464 DFC	05/2001 →
F 2000 33.464 DFK, DF-KI	05/2001 →
F 2000 33.464 DFS, DFRS	05/2001 →
F 2000 35.314 VF-TM	03/2002 → 09/2003
F 2000 35.343 VFC	08/1995 → 01/2000
F 2000 35.343 VFK	08/1995 → 01/2000
F 2000 35.364 VF, VFC, VFRC	05/2001 → 09/2001
F 2000 35.403 VF, VFC, VFRC	08/1995 → 09/2001
F 2000 35.414 VF, VFC, VFRC	09/2002 → 06/2003
F 2000 35.414 VFK, VF-HK, VF-KI	09/2002 → 06/2003
F 2000 35.414 VF-TM	09/2002 → 06/2003
F 2000 35.463 VF, VFC, VFRC	08/1995 → 09/2001
F 2000 35.463 VFK, VF-HK, VF-KI	08/1995 → 09/2001
F 2000 35.464 VF, VFC, VFRC	05/2001 → 08/2002
F 2000 35.464 VFK, VF-HK, VF-KI	03/2002 → 08/2002
F 2000 35.464 VF-TM	03/2002 → 08/2002
F 2000 40.403 DFAK	08/1995 → 09/2001
F 2000 40.403 DFAS	08/1995 → 09/2001
F 2000 40.403 DFK	08/1995 → 09/2001
F 2000 40.403 DFS	08/1995 → 09/2001
F 2000 40.414 DFAK	05/2001 → 08/2002
F 2000 40.414 DFK	05/2001 → 08/2002
F 2000 40.463 DFAK	08/1995 → 09/2001
F 2000 40.463 DFAS	08/1995 → 09/2001
F 2000 40.463 DFK	08/1995 → 09/2001
F 2000 40.463 DFS	08/1995 → 09/2001
F 2000 41.343 VFC	08/1995 → 09/2001
F 2000 41.343 VFK	08/1995 → 09/2001




063534699820 MAN2011 55A 24V

MAN			
F 2000 41.364 VF, VFC, VFRC	05/2001	→	08/2002
F 2000 41.364 VFK, VF-HK, VF-KI	03/2002	→	08/2002
F 2000 41.403 VF, VFC, VFRC	08/1995	→	09/2001
F 2000 41.403 VFK, VF-HK, VF-KI	08/1995	→	09/2001
F 2000 41.414 VF, VFC, VFRC	05/2001	→	08/2002
F 2000 41.414 VFK, VF-HK, VF-KI	03/2002	→	08/2002
F 2000 41.463 VF, VFC, VFRC	08/1995	→	09/2001
F 2000 41.463 VFK, VF-HK, VF-KI	08/1995	→	09/2001
F 2000 41.464 VF, VFC, VFRC	07/1999	→	08/2002
F 2000 41.464 VFK, VF-HK, VF-KI	03/2002	→	08/2002
F 90 19.262 F,19.262 FL,19.262 FLL	01/1988	→	02/1990
F 90 19.262 FA	02/1989	→	02/1990
F 90 19.262 FAK	02/1989	→	02/1990
F 90 19.262 FAS	02/1989	→	02/1990
F 90 19.262 FK	01/1988	→	02/1990
F 90 19.262 FS,19.262 FLS,19.262 FLLS	01/1988	→	02/1990
F 90 19.272 F,19.272 FL,19.272 FLL	02/1990	→	05/1995
F 90 19.272 FA	02/1990	→	05/1995
F 90 19.272 FAK	02/1990	→	05/1995
F 90 19.272 FAS	02/1990	→	05/1995
F 90 19.272 FK	02/1990	→	05/1995
F 90 19.272 FS,19.272 FLS,19.272 FLLS	02/1990	→	05/1995
F 90 19.322 F,19.322 FL,19.322 FLL	02/1990	→	05/1995
F 90 19.322 FA	02/1990	→	06/1996
F 90 19.322 FAK	02/1990	→	06/1996
F 90 19.322 FAS	02/1990	→	06/1996
F 90 19.322 FK	02/1990	→	05/1995
F 90 19.322 FS,19.322 FLS,19.322 FLLS	02/1990	→	05/1995
F 90 19.332 FA	05/1988	→	02/1990
F 90 19.332 FAK	05/1988	→	02/1990
F 90 19.342 F,19.342 FL,19.342 FLL	05/1994	→	05/1995
F 90 19.342 FA	05/1994	→	06/1996
F 90 19.342 FAK	05/1994	→	06/1996
F 90 19.342 FAS	05/1994	→	06/1996
F 90 19.342 FK	05/1994	→	05/1995
F 90 19.342 FS,19.342 FLS,19.342 FLLS	05/1994	→	05/1995
F 90 19.372 F,19.372 FL,19.372 FLL	02/1990	→	04/1992
F 90 19.372 FA	02/1990	→	04/1992
F 90 19.372 FAK	02/1990	→	04/1992
F 90 19.372 FAS	02/1990	→	04/1992
F 90 19.372 FK	02/1990	→	04/1992
F 90 19.372 FS,19.372 FLS,19.372 FLLS	02/1990	→	04/1992
F 90 19.422 F,19.422 FL,19.422 FLL	02/1990	→	04/1992
F 90 19.422 FA	02/1990	→	04/1992




063534699820 MAN2011 55A 24V

MAN			
F 90 19.422 FAK	02/1990	→	04/1992
F 90 19.422 FAS	02/1990	→	04/1992
F 90 19.422 FK	02/1990	→	04/1992
F 90 19.422 FS,19.422 FLS,19.422 FLLS	02/1990	→	04/1992
F 90 19.502 F,19.502 FL,19.502 FLL	02/1990	→	06/1996
F 90 19.502 FS,19.502 FLS,19.502 FLLS	02/1990	→	06/1996
F 90 24.262 DF	01/1988	→	02/1990
F 90 24.262 DFK	01/1988	→	02/1990
F 90 24.262 DFS,24.262 DFLS	07/1989	→	02/1990
F 90 24.262 FNL,24.262 FNLL,24.262 FVL	01/1988	→	02/1990
F 90 24.272 DF	02/1990	→	12/1990
F 90 24.272 DFK	02/1990	→	12/1990
F 90 24.272 DFS,24.272 DFLS	05/1994	→	04/1995
F 90 24.272 FNL,24.272 FNLL,24.272 FVL	02/1990	→	05/1995
F 90 24.272 FNLS,24.272 FVLS	02/1990	→	05/1995
F 90 24.302 DF	05/1990	→	12/1990
F 90 24.302 DFK	05/1990	→	12/1990
F 90 24.302 DFS,24.302 DFLS	05/1990	→	04/1992
F 90 24.302 FNL,24.302 FNLL,24.302 FVL	05/1990	→	10/1990
F 90 24.322 DF	02/1990	→	12/1990
F 90 24.322 DFK	02/1990	→	12/1990
F 90 24.322 DFS,24.322 DFLS	02/1990	→	12/1990
F 90 24.322 FNL,24.322 FNLL,24.322 FVL	12/1990	→	05/1994
F 90 24.322 FNLS,24.322 FVLS	02/1990	→	12/1990
F 90 24.342 FNL,24.342 FNLL	05/1994	→	05/1995
F 90 24.372 DF	02/1990	→	12/1990
F 90 24.372 DFK	02/1990	→	12/1990
F 90 24.372 DFS, 24.372 DFLS	02/1990	→	04/1995
F 90 24.372 FNL,24.372 FNLL,24.372 FVL	02/1990	→	12/1990
F 90 24.372 FNLS,24.372 FVLS	02/1990	→	12/1990
F 90 24.422 DF	02/1990	→	12/1990
F 90 24.422 DFK	02/1990	→	12/1990
F 90 24.422 DFS,24.422 DFLS	02/1990	→	12/1990
F 90 24.422 FNL,24.422 FNLL,24.422 FVL	02/1990	→	05/1995
F 90 24.502 DF	02/1990	→	12/1990
F 90 24.502 DFK	02/1990	→	12/1990
F 90 24.502 DFS	02/1990	→	12/1990
F 90 24.502 FNL	02/1990	→	12/1990
F 90 25.272 DF	09/1990	→	10/1992
F 90 25.272 DFK	09/1990	→	10/1992
F 90 25.272 DFS,25.272 DFLS	09/1990	→	10/1992
F 90 25.272 FNL,25.272 FNLL,25.272 FVL	09/1990	→	10/1993
F 90 25.302 DF	09/1990	→	12/1991
F 90 25.302 DFK	09/1990	→	12/1991




063534699820 MAN2011 55A 24V

MAN	
F 90 25.302 DFS,25.302 DFLS	09/1990 → 12/1991
F 90 25.302 FNL,25.302 FNLL	09/1990 → 12/1991
F 90 25.302 FNLS,25.302 FVLS	09/1990 → 12/1991
F 90 25.322 DF	09/1990 → 12/1992
F 90 25.322 DFK	09/1990 → 12/1992
F 90 25.322 DFS,25.322 DFLS	09/1990 → 10/1992
F 90 25.322 FNL,25.322 FNLL	09/1990 → 10/1992
F 90 25.322 FNLS,25.322 FVLS	09/1990 → 12/1992
F 90 25.372 DF	09/1990 → 04/1992
F 90 25.372 DFK	09/1990 → 04/1992
F 90 25.372 DFS	09/1990 → 04/1992
F 90 25.372 DFS,25.372 DFLS	09/1990 → 04/1992
F 90 25.372 FNL,25.372 FNLL	09/1990 → 04/1992
F 90 25.372 FNLS,25.372 FVLS	09/1990 → 04/1992
F 90 25.372 FVLS	09/1990 → 04/1992
F 90 25.422 DF	09/1990 → 04/1992
F 90 25.422 DFK	09/1990 → 04/1992
F 90 25.422 DFS,25.422 DFLS	09/1990 → 12/1992
F 90 25.422 FNL,25.422 FNLL	09/1990 → 12/1992
F 90 25.422 FNLS,25.422 FVLS	09/1990 → 12/1992
F 90 25.502 DF	09/1990 → 12/1992
F 90 25.502 DFS	09/1990 → 12/1992
F 90 25.502 FNL	09/1990 → 12/1992
F 90 26.262 DF	01/1988 → 02/1990
F 90 26.262 DFA	02/1989 → 02/1990
F 90 26.262 DFAK	02/1989 → 02/1990
F 90 26.262 DFAS	02/1989 → 02/1990
F 90 26.262 DFK	01/1988 → 02/1990
F 90 26.262 DFS	01/1988 → 02/1990
F 90 26.272 DF	02/1990 → 06/1996
F 90 26.272 DFA	02/1990 → 12/1992
F 90 26.272 DFAK	02/1990 → 12/1992
F 90 26.272 DFAS	02/1990 → 12/1992
F 90 26.272 DFK	10/1992 → 01/1993
F 90 26.272 DFS,26.272 DFLS	10/1992 → 01/1993
F 90 26.272 FNL,26.272 FNLL	03/1991 → 05/1995
F 90 26.272 FNLS,26.272 FVLS	09/1990 → 12/1995
F 90 26.302 DF	05/1990 → 12/1991
F 90 26.302 DFA	05/1990 → 12/1991
F 90 26.302 DFAK	05/1990 → 12/1991
F 90 26.302 DFAS	05/1990 → 12/1991
F 90 26.302 DFK	05/1990 → 12/1991
F 90 26.302 DFS	05/1990 → 12/1991
F 90 26.302 FNL,26.302 FNLL	03/1991 → 12/1991

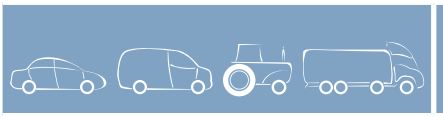


063534699820 MAN2011 55A 24V

MAN	
F 90 26.302 FNLS,26.302 FVLS	09/1990 → 12/1991
F 90 26.322 DF	10/1992 → 01/1993
F 90 26.322 DFA	10/1992 → 12/1992
F 90 26.322 DFAK	02/1990 → 12/1992
F 90 26.322 DFAS	10/1992 → 12/1992
F 90 26.322 DFK	02/1992 → 06/1996
F 90 26.322 DFS,26.322 DFLS	02/1990 → 06/1996
F 90 26.322 FNL,26.322 FNLL	03/1991 → 05/1995
F 90 26.322 FNLS,26.322 FVLS	09/1990 → 12/1995
F 90 26.342 DF,26.342 DFL	05/1994 → 06/1996
F 90 26.342 DFK,26.342 DFLK	05/1994 → 06/1996
F 90 26.342 DFS	05/1994 → 06/1996
F 90 26.372 DF,26.372 DFL	02/1990 → 04/1992
F 90 26.372 DFA	02/1990 → 04/1992
F 90 26.372 DFAK	01/1992 → 04/1992
F 90 26.372 DFAS	02/1990 → 04/1992
F 90 26.372 DFK	01/1992 → 04/1992
F 90 26.372 DFS	02/1990 → 04/1992
F 90 26.372 FNL,26.372 FNLL,26.372 FVL	09/1990 → 04/1992
F 90 26.372 FNLS,26.372 FVLS	01/1992 → 04/1992
F 90 26.422 DF,26.422 DFL	02/1990 → 04/1992
F 90 26.422 DFA	02/1990 → 04/1992
F 90 26.422 DFAK	02/1990 → 04/1992
F 90 26.422 DFAS	02/1990 → 04/1992
F 90 26.422 DFK	02/1990 → 04/1992
F 90 26.422 DFS	02/1990 → 04/1992
F 90 26.422 FNL,26.422 FNLL,26.422 FVL	09/1990 → 04/1992
F 90 26.422 FNLS,26.422 FVLS	01/1992 → 04/1992
F 90 26.502 DF	02/1990 → 04/1992
F 90 26.502 DFA	02/1990 → 04/1992
F 90 26.502 DFAS	02/1990 → 04/1992
F 90 26.502 DFS,26.502 DFLS	02/1990 → 04/1992
F 90 26.502 FNL,26.502 FNLL	09/1991 → 06/1996
F 90 32.262 VF	02/1989 → 02/1990
F 90 32.262 VFK	02/1989 → 02/1990
F 90 32.262 VFTM	02/1989 → 02/1990
F 90 32.272 VF	10/1992 → 04/1995
F 90 32.272 VFK	02/1990 → 05/1994
F 90 32.302 VF	05/1990 → 09/1991
F 90 32.302 VFK	05/1990 → 09/1991
F 90 32.322 VF	02/1990 → 05/1994
F 90 32.322 VFK	02/1990 → 05/1994
F 90 32.342 VFK	05/1994 → 06/1996
F 90 32.372 VF	02/1990 → 04/1992




063534699820 MAN2011 55A 24V

MAN	
F 90 32.422 VF	02/1990 → 04/1992
F 90 32.422 VFK	02/1990 → 04/1992
F 90 33.242 DFAK	01/1988 → 08/1988
F 90 33.262 DF	08/1988 → 02/1990
F 90 33.262 DFA	07/1989 → 02/1990
F 90 33.262 DFAK	07/1989 → 02/1990
F 90 33.262 DFK	08/1988 → 02/1990
F 90 33.272 DF	10/1992 → 04/1995
F 90 33.272 DFA	10/1992 → 04/1995
F 90 33.272 FVL	10/1992 → 04/1995
F 90 33.322 DF	09/1991 → 06/1996
F 90 33.322 DFA	09/1991 → 06/1996
F 90 33.322 FVL	09/1991 → 06/1996
F 90 33.342 DF	05/1994 → 06/1996
F 90 33.342 DFA	05/1994 → 06/1996
F 90 33.372 DF	09/1991 → 04/1992
F 90 33.372 DFA	09/1991 → 04/1992
F 90 33.372 DFAK	09/1991 → 04/1992
F 90 33.372 DFK	09/1991 → 04/1992
F 90 33.372 DFS	09/1991 → 06/1996
F 90 33.422 DF	09/1991 → 04/1992
F 90 33.422 DFA	09/1991 → 04/1992
F 90 33.422 DFAK	01/1994 → 06/1996
F 90 33.422 DFK	01/1994 → 06/1996
F 90 33.422 DFS	01/1994 → 06/1996
F 90 33.502 DF	09/1991 → 06/1996
F 90 33.502 DFA	09/1991 → 06/1996
F 90 35.262 VF	02/1989 → 02/1990
F 90 35.262 VFA	07/1989 → 02/1990
F 90 35.262 VFK	02/1989 → 02/1990
F 90 35.272 VF	02/1990 → 12/1991
F 90 35.272 VFK	02/1990 → 12/1991
F 90 35.292 VF	10/1988 → 04/1995
F 90 35.292 VFK	10/1988 → 04/1995
F 90 35.302 VF	05/1990 → 09/1991
F 90 35.302 VFA	05/1990 → 09/1991
F 90 35.302 VFAK	05/1990 → 09/1991
F 90 35.302 VFK	05/1990 → 09/1991
F 90 35.322 VFAK	02/1990 → 06/1996
F 90 35.322 VFK	10/1992 → 06/1996
F 90 35.322 VK	02/1990 → 05/1994
F 90 35.332 VF	10/1988 → 04/1995
F 90 35.332 VFK	10/1988 → 04/1995
F 90 35.342 VF	05/1994 → 06/1996




063534699820 MAN2011 55A 24V

MAN	
F 90 35.342 VFK	05/1994 → 06/1996
F 90 35.372 VF	02/1990 → 04/1992
F 90 35.372 VFK	02/1990 → 04/1992
F 90 35.422 VF	02/1990 → 04/1992
F 90 35.422 VFK	02/1990 → 04/1992
F 90 40.372 DF	12/1991 → 04/1992
F 90 40.372 DFA	12/1991 → 04/1992
F 90 40.422 DF	12/1991 → 04/1992
F 90 40.422 DFA	12/1991 → 04/1992
F 90 40.502 DFA	02/1990 → 06/1996
F 90 41.262 VF	07/1989 → 02/1990
F 90 41.262 VFK	07/1989 → 02/1990
F 90 41.272 VF	02/1990 → 12/1991
F 90 41.292 VF	10/1988 → 02/1990
F 90 41.292 VFK	10/1988 → 02/1990
F 90 41.322 VF	02/1990 → 06/1996
F 90 41.332 VF	10/1988 → 02/1990
F 90 41.332 VFK	10/1988 → 02/1990
F 90 41.342 VF	05/1994 → 06/1996
F 90 41.362 VF	10/1988 → 02/1990
F 90 41.362 VFK	10/1988 → 02/1990
F 90 41.372 VF	10/1992 → 05/1994
F 90 41.402 VF	05/1994 → 06/1996
F 90 41.422 VF	02/1990 → 06/1996
F 90 48.292 VFAK	07/1989 → 02/1990
F 90 Unterflur 19.322 U,19.322 ULL	02/1990 → 05/1994
F 90 Unterflur 19.332 U,19.322 ULL	07/1986 → 02/1990
F 90 Unterflur 19.362 U,19.362 ULL	07/1986 → 01/1991
F 90 Unterflur 19.372 U,19.372 ULL	02/1990 → 05/1994
F 90 Unterflur 19.422 U,19.422 ULL	02/1990 → 05/1994
F 90 Unterflur 24.322 UNL,24.322 UNLL	02/1990 → 12/1990
F 90 Unterflur 24.332 UNL,24.332 UNLL	10/1986 → 02/1990
F 90 Unterflur 24.362 UNL,24.362 UNLL	10/1986 → 02/1990
F 90 Unterflur 24.372 UNL,24.372 UNLL	02/1990 → 12/1990
F 90 Unterflur 24.422 UNL,24.422 UNLL	02/1990 → 12/1990
F 90 Unterflur 25.322 UNL,25.322 UNLL	09/1990 → 12/1992
F 90 Unterflur 25.372 UNL,25.372 UNLL	09/1990 → 04/1992
F 90 Unterflur 25.422 UNL,25.422 UNLL	09/1990 → 12/1992
F 90 Unterflur 26.322 UNL,26.322 UNLL	09/1990 → 04/1992
F 90 Unterflur 26.372 UNL,26.372 UNLL	09/1990 → 04/1992
F 90 Unterflur 26.422 UNL,26.422 UNLL	09/1990 → 04/1992
G 90 10.150 F,10.150 FL	10/1992 → 10/1993
G 90 10.150 FK	10/1992 → 10/1993
G 90 8.150 F,8.150 FL	10/1992 → 10/1993




063534699820 MAN2011 55A 24V

MAN	
G 90 8.150 FAE	10/1992 → 05/1995
G 90 8.150 FAKO	10/1992 → 05/1995
G 90 8.150 FK	10/1992 → 10/1993
G 90 8.150 FOC	10/1992 → 10/1993
G 90 8.150 FS,8.150 FLS	09/1987 → 10/1993
G 90 9.150 F,9.150 FL	10/1992 → 10/1993
G 90 9.150 FAE	05/1988 → 05/1992
G 90 9.150 FAKO	10/1992 → 05/1995
G 90 9.150 FK	10/1992 → 10/1993
G 90 9.150 FOC	10/1992 → 10/1993
G 90 9.150 FS,9.150 FLS	10/1992 → 10/1993
L 2000 10.150 FOC	02/1995 → 01/1996
L 2000 10.153 LAEK	10/1993 → 06/1996
L 2000 10.153 LC,10.153 LLC	10/1993 → 06/1996
L 2000 10.153 LK	10/1993 → 06/1996
L 2000 10.153 LLS	01/1995 → 06/1996
L 2000 10.163 LAC, LAEC, LARC, LAERC	05/1994 → 09/2006
L 2000 10.163 LAK, LAEK, LARK, LAERK	01/1995 → 09/2006
L 2000 10.163 LC,10.163 LLC	05/1994 → 01/2001
L 2000 10.163 LC,10.163 LLC, LRC, LLRC (LE160C)	09/2000 → 09/2001
L 2000 10.163 LK, LRK, L-KI, LR-KI	01/1995 → 09/2006
L 2000 10.163 LLS, LLRS	05/1994 → 09/2001
L 2000 10.220 FOC,10.220 FOCL	02/1995 → 09/2001
L 2000 10.223 LAEC	01/1995 → 06/1996
L 2000 10.223 LC,10.223 LLC	05/1994 → 06/1996
L 2000 10.223 LK	05/1994 → 06/1996
L 2000 10.223 LLS	05/1994 → 06/1996
L 2000 10.224 LAC, LAEC, LARC, LAERC	01/1995 → 09/2001
L 2000 10.224 LAK, LAEK, LARK, LAERK	01/1995 → 09/2001
L 2000 10.224 LC,10.224 LLC, LRC, LLRC	05/1994 → 09/2001
L 2000 10.224 LK, LRK, L-KI, LR-KI	05/1994 → 09/2001
L 2000 10.224 LLS, LLRS	05/1994 → 09/2001
L 2000 10.225 LAC, LAEC, LARC, LAERC, LA-LF, LAE-LF (LE220C)	09/2000 → 09/2001
L 2000 8.103 LC, 8.103 LLC	10/1993 → 06/1996
L 2000 8.103 LK	10/1993 → 06/1996
L 2000 8.113 LC, 8.113 LLC	08/1995 → 09/2001
L 2000 8.113 LK, LRK, L-KI, LR-KI	08/1995 → 09/2001
L 2000 8.150 FOC,8.150 FOCL	02/1995 → 07/1998
L 2000 8.153 LAEC	01/1995 → 08/1995
L 2000 8.153 LAEK	01/1995 → 09/1996
L 2000 8.153 LC,8.153 LLC	01/1995 → 07/1997
L 2000 8.153 LK	01/1995 → 08/1995

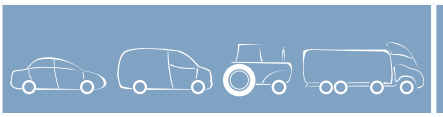


063534699820 MAN2011 55A 24V

MAN	
L 2000 8.153 LLS	10/1993 → 06/1996
L 2000 8.163 LAC, LAEC, LARC, LAERC, LA-LF, LAE-LF	01/1995 → 02/2002
L 2000 8.163 LAEC	08/1995 → 03/1997
L 2000 8.163 LC,8.163 LLC	09/2000 →
L 2000 8.163 LC,8.163 LLC	05/1994 → 09/2001
L 2000 8.163 LC,8.163 LLC, LRC, LLRC, L-LF	08/1995 → 02/2002
L 2000 8.163 LK, LRK, L-KI, LR-KI	08/1995 → 09/2001
L 2000 8.163 LLS, LLRS	05/1994 →
L 2000 8.220 FOC,8.220 FOCL	04/1995 → 09/2001
L 2000 8.223 LAEC	01/1995 → 06/1996
L 2000 8.223 LC,8.223 LLC	10/1993 → 06/1996
L 2000 8.223 LK	05/1994 → 01/1995
L 2000 8.223 LLS	05/1994 → 01/1995
L 2000 8.224 LAC, LAEC, LARC, LAERC	01/1995 → 08/2001
L 2000 8.224 LAK, LAEK, LARK, LAERK	01/1995 → 08/2001
L 2000 8.224 LC,8.224 LLC, LRC, LLRC	05/1994 → 01/1995
L 2000 8.224 LK, LRK, L-KI, LR-KI	01/1995 → 03/2001
L 2000 8.224 LLS, LLRS	01/1995 → 09/2001
L 2000 8.225 LC,8.225 LLC, LRC, LLRC (LE220C)	09/2000 → 08/2001
L 2000 9.153 LC,9.153 LLC	01/1995 → 08/1995
L 2000 9.153 LK	08/1995 → 06/1996
L 2000 9.153 LLS	01/1995 → 12/1995
L 2000 9.163 LC	08/1995 → 03/1997
L 2000 9.163 LC,9.163 LLC, LRC, LLRC	05/1994 → 09/2001
L 2000 9.163 LK	08/1995 → 03/1997
L 2000 9.163 LK, LRK, L-KI, LR-KI	01/1995 → 08/1995
L 2000 9.163 LLS, LLRS	05/1994 → 03/2001
L 2000 9.223 LC,9.223 LLC	05/1994 → 06/1996
L 2000 9.223 LK	05/1994 → 06/1996
L 2000 9.223 LLS	05/1994 → 06/1996
L 2000 9.224 LC,9.224 LLC, LRC, LLRC	05/1994 → 09/2001
L 2000 9.224 LK, LRK, L-KI, LR-KI	05/1994 → 09/2001
L 2000 9.224 LLS, LLRS	05/1994 → 03/2001
M 2000 L 12.163 LC, LLC, LRC, LLRC	08/1995 → 08/2001
M 2000 L 12.163 LK, LRK	08/1995 → 08/2001
M 2000 L 12.224 LC, LLC, LRC, LLRC	08/1995 → 09/2001
M 2000 L 12.224, 12.225, LK, LRK	08/1995 → 08/2001
M 2000 L 14.163 LC, LLC, LRC, LLRC	08/1995 → 08/2001
M 2000 L 14.163 LK, LRK	08/1995 → 08/2001
M 2000 L 14.224 LAC, LARC	08/1995 → 09/2001
M 2000 L 14.224 LAK, LARK	08/1995 → 09/2001




063534699820 MAN2011 55A 24V

MAN

M 2000 L 14.224 LC, LLC, LLLC, LRC, LLRC, LLLRC	08/1995 → 09/2001
M 2000 L 14.224 LK, LRK	08/1995 → 09/2001
M 2000 L 14.225 LAC, LARC, (LE220B)	09/2000 → 09/2001
M 2000 L 14.225 LC, LLC, LLLC, LRC, LLRC, LLLRC, (LE220B)	09/2000 → 09/2001
M 2000 L 14.263, 14.264 LAC, LARC	08/1995 → 09/2001
M 2000 L 14.263, 14.264 LAK, LARK	08/1995 → 09/2001
M 2000 L 14.263, 14.264 LC, LLC, LLLC, LRC, LLRC, LLLRC	08/1995 → 09/2001
M 2000 L 14.263, 14.264 LK, LRK	08/1995 → 09/2001
M 2000 L 15.163 LC, LLC, LRC	08/1995 → 09/2001
M 2000 L 15.163 LK, LRK	08/1995 → 09/2001
M 2000 L 15.224 LC, LLC, LLLC, LRC, LLRC, LLLRC	08/1995 → 09/2001
M 2000 L 15.224 LK, LRK	08/1995 → 09/2001
M 2000 L 15.225 LC, LLC, LLLC, LRC, LLRC, LLLRC, (LE220B)	09/2000 → 09/2001
M 2000 L 15.225 LK, LRK, (LE220B)	09/2000 → 09/2001
M 2000 L 15.263, 15.264 LC, LLC, LLLC, LRC, LLRC, LLLRC	09/2000 → 09/2001
M 2000 L 15.263, 15.264 LK, LRK	08/1995 → 09/2001
M 2000 L 18.224, 18.225, LAC, LARC	08/1995 → 09/2001
M 2000 L 18.224, 18.225, LAK, LARK	08/1995 → 09/2001
M 2000 L 18.224, 18.225, LC, LLC, LLLC, LRC, LLRC, LLLRC	08/1995 → 09/2001
M 2000 L 18.224, 18.225, LK, LLK, LRK, LLRK	08/1995 → 09/2001
M 2000 L 18.224, 18.225, L-KO, LR-KO	05/2001 → 09/2001
M 2000 L 18.263, 18.264, LAC, LARC	08/1995 → 09/2001
M 2000 L 18.263, 18.264, LAK, LARK	08/1995 → 09/2001
M 2000 L 18.263, 18.264, LC, LLC, LLLC, LRC, LLRC, LLLRC	08/1995 → 09/2001
M 2000 L 18.263, 18.264, LK, LLK, LRK, LLRK	08/1995 → 09/2001
M 2000 L 20.224 LNLC, LNLLC	05/2001 → 09/2001
M 2000 M 14.224 MAK	08/1995 → 09/2001
M 2000 M 14.224 MC, MLC, MLLC	08/1995 → 09/2001
M 2000 M 14.224 MK	08/1995 → 09/2001
M 2000 M 14.224 MLS, MLRS	08/1995 → 09/2001
M 2000 M 14.264 MC, MLC, MLLC	08/1995 → 09/2001
M 2000 M 14.264 MLS, MLRS	08/1995 → 09/2001
M 2000 M 18.224 MAC, MARC	08/1995 → 09/2001
M 2000 M 18.224 MAK, MARK	08/1995 → 09/2001




063534699820 MAN2011 55A 24V

MAN

M 2000 M 18.224 MC, MLC, MLLC, MRC, MLRC, MLLRC	08/1995 → 09/2001
M 2000 M 18.224 MK,18.224 MLK, MRK, MLRK	08/1995 → 09/2001
M 2000 M 18.224 MLS, MLRS	08/1995 → 09/2001
M 2000 M 18.264 MAC, MARC	08/1995 → 09/2001
M 2000 M 18.264 MAK, MARK	08/1995 → 09/2001
M 2000 M 18.264 MC, MLC, MLLC, MRC, MLRC, MLLRC	08/1995 → 09/2001
M 2000 M 18.264 MK,18.264 MLK, MRK, MLRK	08/1995 → 09/2001
M 2000 M 18.264 MLS, MLRS	08/1995 → 09/2001
M 2000 M 25.224 MNLC, MNLLC, MNLRC, MNLLRC, MVLC	08/1995 → 09/2001
M 2000 M 25.264 MNLC, MNLLC, MNLRC, MNLLRC, MVLC	08/1995 → 09/2001
M 90 12.152 F,12.152 FL	12/1988 → 05/1994
M 90 12.152 FK	12/1988 → 05/1994
M 90 12.152 FS,12.152 FLS	12/1988 → 05/1994
M 90 12.192 F,12.192 FL	07/1990 → 06/1996
M 90 12.192 FA	10/1992 → 06/1996
M 90 12.192 FAK	10/1992 → 06/1996
M 90 12.192 FK	07/1990 → 06/1996
M 90 12.192 FS,12.192 FLS	07/1990 → 06/1996
M 90 12.222 F,12.222 FL	05/1994 → 06/1996
M 90 12.222 FA	05/1994 → 06/1996
M 90 12.222 FAK	05/1994 → 06/1996
M 90 12.222 FK	05/1994 → 06/1996
M 90 12.222 FLS	05/1994 → 06/1996
M 90 12.232 F,12.232 FL	08/1988 → 06/1996
M 90 12.232 FA	05/1990 → 06/1996
M 90 12.232 FAK	05/1990 → 06/1996
M 90 12.232 FK	08/1988 → 06/1996
M 90 12.232 FS,12.232 FLS	08/1988 → 06/1996
M 90 12.262 F,12.262 FL	08/1995 → 06/1996
M 90 12.262 FK	08/1995 → 06/1996
M 90 12.262 FS,12.262 FLS	08/1995 → 06/1996
M 90 12.272 F,12.272 FL	09/1991 → 10/1992
M 90 12.272 F,12.272 FL	10/1992 → 06/1996
M 90 12.272 FA	10/1993 → 04/1995
M 90 12.272 FAK	10/1993 → 04/1995
M 90 12.272 FK	10/1992 → 06/1996
M 90 12.272 FK	09/1991 → 10/1992
M 90 12.272 FS,12.272 FLS	10/1992 → 06/1996




063534699820 MAN2011 55A 24V

MAN	
M 90 12.272 FS,12.272 FLS	09/1991 → 10/1992
M 90 14.152 F,14.152 FL	12/1988 → 04/1994
M 90 14.152 F,14.152 FL	05/1994 → 06/1996
M 90 14.152 FK	12/1988 → 05/1994
M 90 14.152 FK	05/1994 → 06/1996
M 90 14.152 FS,14.152 FLS	12/1988 → 05/1994
M 90 14.152 FS,14.152 FLS	05/1994 → 06/1996
M 90 14.162 F,14.162 FL	08/1995 → 06/1996
M 90 14.162 FK	08/1995 → 06/1996
M 90 14.162 FS,14.162 FLS	08/1995 → 06/1996
M 90 14.192 F,14.192 FL	07/1990 → 06/1996
M 90 14.192 FK	07/1990 → 06/1996
M 90 14.192 FS,14.192 FLS	07/1990 → 06/1996
M 90 14.222 F,14.222 FL	05/1994 → 06/1996
M 90 14.222 FK	05/1994 → 06/1996
M 90 14.222 FLS	05/1994 → 06/1996
M 90 14.232 F,14.232 FL	05/1990 → 04/1995
M 90 14.232 F,14.232 FL	08/1988 → 06/1996
M 90 14.232 FK	08/1988 → 06/1996
M 90 14.232 FS,14.232 FLS	08/1988 → 06/1996
M 90 14.232 FS,14.232 FLS	05/1990 → 04/1995
M 90 14.262 F,14.262 FL	08/1995 → 06/1996
M 90 14.262 FK	08/1995 → 06/1996
M 90 14.262 FS,14.262 FLS	08/1995 → 06/1996
M 90 14.272 F,14.272 FL	09/1991 → 10/1992
M 90 14.272 F,14.272 FL	10/1992 → 06/1996
M 90 14.272 FK	10/1992 → 06/1996
M 90 14.272 FK	09/1991 → 10/1992
M 90 14.272 FS,14.272 FLS	09/1991 → 10/1992
M 90 14.272 FS,14.272 FLS	12/1992 → 06/1996
M 90 17.192 F,17.192 FL	07/1990 → 04/1995
M 90 17.192 FA	07/1990 → 06/1996
M 90 17.192 FAK	07/1990 → 06/1996
M 90 17.192 FK	07/1990 → 01/1991
M 90 17.192 FS,17.192 FLS	07/1990 → 04/1995
M 90 17.222 FA	05/1994 → 06/1996
M 90 17.222 FAK	05/1994 → 06/1996
M 90 17.232 F,17.232 FL	08/1988 → 04/1995
M 90 17.232 F,17.232 FL	05/1990 → 04/1995
M 90 17.232 FA	02/1989 → 06/1996
M 90 17.232 FA	05/1990 → 04/1995
M 90 17.232 FAK	05/1990 → 04/1995
M 90 17.232 FAK	02/1989 → 06/1996
M 90 17.232 FK	08/1988 → 01/1991

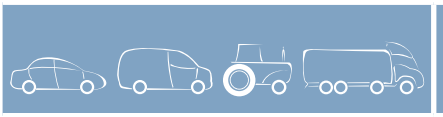


063534699820 MAN2011 55A 24V

MAN	
M 90 17.232 FK	05/1990 → 01/1991
M 90 17.232 FS,17.232 FLS	08/1988 → 04/1995
M 90 17.232 FS,17.232 FLS	05/1990 → 04/1995
M 90 17.272 FLS	09/1991 → 05/1995
M 90 17.272 FLS	10/1992 → 05/1995
M 90 18.192 F,18.192 FL,18.192 FLL	09/1990 → 06/1996
M 90 18.192 FK	09/1990 → 06/1996
M 90 18.222 F,18.222 FL,18.222 FLL	05/1994 → 06/1996
M 90 18.222 FK	05/1994 → 06/1996
M 90 18.232 F,18.232 FL,18.232 FLL	09/1990 → 06/1996
M 90 18.232 FK	09/1990 → 06/1996
M 90 18.262 F,18.262 FL,18.262 FLL	08/1995 → 06/1996
M 90 18.262 FK	08/1995 → 06/1996
M 90 18.272 F,18.272 FL,18.272 FLL	09/1991 → 05/1994
M 90 18.272 F,18.272 FL,18.272 FLL	10/1992 → 06/1996
M 90 18.272 FK	10/1992 → 06/1996
M 90 18.272 FK	09/1991 → 05/1994
M 90 24.192 FNL,24.192 FNLL,24.192 FVL	07/1989 → 06/1996
M 90 24.222 FNL,24.222 FNLL,24.222 FVL	05/1994 → 06/1996
M 90 24.232 FNL	05/1990 → 04/1995
M 90 24.232 FNL,24.232 FNLL,24.232 FVL	07/1989 → 06/1996
M 90 24.262 FNL,24.262 FNLL,24.262 FVL	08/1995 → 06/1996
M 90 24.272 FNL,24.272 FNLL,24.272 FVL	10/1992 → 06/1996
M 90 24.272 FNL,24.272 FVL	09/1991 → 05/1994
NG NG 262, NG 272	08/1992 → 09/1995
NM NM 182, NM 192	10/1993 → 03/1997
R FRH 362	05/1985 → 12/1992
R R 292, FR 292, FRH 292	04/1992 → 12/1992
SG SG 240 H,SG 292 H	11/1984 → 09/1989
SG SG 242,SG 292	09/1985 → 04/1994
SM SM 182,SM 192	04/1992 → 02/1995
SU SU 240	01/1986 → 09/1989
SU SU 292	04/1992 → 04/1993
UL UL 292	09/1989 → 03/1993
MERCEDES-BENZ	
LK/LN2 709	11/1986 → 12/1998
LK/LN2 711	03/1994 → 12/1998
LK/LN2 809	02/1992 → 12/1998
LK/LN2 811	03/1994 → 12/1998
LK/LN2 914	07/1986 → 02/1993
LK/LN2 917	03/1994 → 12/1998
LK/LN2 1314	12/1992 → 12/1998
LK/LN2 1724	01/1991 → 12/1998
LK/LN2 1114,1114 L	10/1984 → 02/1993




063534699820 MAN2011 55A 24V

MERCEDES-BENZ

LK/LN2 1117 A	03/1994 → 12/1998
LK/LN2 1117 AK	03/1994 → 12/1998
LK/LN2 1117 K	04/1984 → 12/1998
LK/LN2 1117 O,1117 LO	03/1984 → 12/1998
LK/LN2 1117 S,1117 LS	01/1984 → 12/1998
LK/LN2 1117,1117 L	01/1984 → 12/1998
LK/LN2 1120 AF	02/1987 → 12/1998
LK/LN2 1120 F	02/1990 → 12/1992
LK/LN2 1120 L	08/1984 → 02/1993
LK/LN2 1120 O,1120 LO	02/1992 → 11/1996
LK/LN2 1120 S,1120 LS	01/1984 → 12/1998
LK/LN2 1120,1120 L	01/1984 → 12/1998
LK/LN2 1124 AF	06/1994 → 11/1996
LK/LN2 1124 F	03/1992 → 12/1998
LK/LN2 1217 KO	03/1994 → 12/1998
LK/LN2 1314 AK	12/1992 → 12/1998
LK/LN2 1314 KO	07/1984 → 09/1995
LK/LN2 1317 AK	06/1987 → 12/1998
LK/LN2 1317 K	07/1984 → 12/1998
LK/LN2 1317 KO	03/1994 → 12/1998
LK/LN2 1317 S,1317 LS	11/1986 → 12/1998
LK/LN2 1317,1317 L	11/1986 → 12/1998
LK/LN2 1320 AK	12/1992 → 12/1998
LK/LN2 1320 L	12/1992 → 12/1998
LK/LN2 1320 S,1320 LS	10/1984 → 12/1998
LK/LN2 1320,1320 L	10/1984 → 02/1993
LK/LN2 1320,1320 L	10/1984 → 12/1998
LK/LN2 1324 S,1324 LS	01/1991 → 12/1998
LK/LN2 1324,1324 L	01/1991 → 12/1998
LK/LN2 1514 K	01/1989 → 12/1992
LK/LN2 1514,1514 L	01/1989 → 12/1998
LK/LN2 1517 K	01/1989 → 12/1998
LK/LN2 1517,1517 L	10/1988 → 12/1998
LK/LN2 1520,1520 L	01/1984 → 12/1998
LK/LN2 1520,1520 L	01/1989 → 12/1998
LK/LN2 1524,1524 L	02/1991 → 12/1998
LK/LN2 2020 L	01/1984 → 12/1998
LK/LN2 809 K	02/1992 → 12/1998
LK/LN2 811 K	03/1994 → 12/1998
LK/LN2 814 F	05/1986 → 12/1998
LK/LN2 814 K	11/1986 → 12/1998
LK/LN2 814 O, 814 LO	06/1990 → 11/1996
LK/LN2 814 S	11/1986 → 12/1998
LK/LN2 814,814L	11/1986 → 12/1998




063534699820 MAN2011 55A 24V

MERCEDES-BENZ

LK/LN2 817 F	03/1984 → 12/1998
LK/LN2 817 K	02/1992 → 12/1998
LK/LN2 817 O, 817 LO	01/1984 → 12/1998
LK/LN2 817 S,817 LS	11/1986 → 12/1998
LK/LN2 817,817 L	11/1986 → 12/1998
LK/LN2 914 AK	03/1991 → 12/1998
LK/LN2 914 K	03/1991 → 12/1998
LK/LN2 917 AF	12/1992 → 12/1996
LK/LN2 917 AK	03/1994 → 12/1998
LK/LN2 917 K	03/1994 → 12/1998
LK/LN2 917 KO	03/1994 → 12/1998
LK/LN2 O 1114 ,O 1114 L	06/1990 → 11/1996
LK/LN2 O 814, O 814 L	03/1994 → 12/1998
MK 1222	07/1989 → 08/1994
MK 1417	07/1992 → 09/1996
MK 1424	01/1994 → 09/1996
MK 1431	07/1988 → 08/1996
MK 1722	12/1988 → 08/1994
MK 1729	07/1988 → 08/1994
MK 1824	08/1992 → 09/1996
MK 1926	07/1988 → 09/1996
MK 2426	01/1990 → 08/1994
MK 2431	03/1991 → 09/1996
MK 2524	06/1992 → 09/1996
MK 1222 A, 1222 LA	09/1989 → 07/1994
MK 1222 AF	09/1989 → 09/1993
MK 1222 F	07/1989 → 08/1994
MK 1222 S, 1222 LS	07/1989 → 08/1994
MK 1224 AF	02/1993 → 09/1996
MK 1224 F	02/1993 → 08/1994
MK 1226 AF	02/1990 → 09/1996
MK 1227 A	01/1992 → 07/1992
MK 1234 AF	01/1992 → 09/1996
MK 1417 AK	07/1992 → 09/1996
MK 1417 K	07/1992 → 09/1996
MK 1420 LS	02/1990 → 06/1993
MK 1420,1420 L	02/1990 → 06/1993
MK 1422 F	07/1989 → 08/1994
MK 1422 S,1422 LS	06/1989 → 09/1993
MK 1422,1422 L	06/1989 → 09/1993
MK 1424 S,1424 LS	02/1993 → 09/1996
MK 1424,1424 L	02/1993 → 09/1996
MK 1426 S,1426 LS	06/1989 → 09/1993
MK 1427 F	02/1993 → 09/1996





063534699820 MAN2011 55A 24V

MERCEDES-BENZ	
MK 1624 S	02/1993 → 08/1994
MK 1720 L	12/1988 → 08/1994
MK 1720 S	02/1990 → 08/1994
MK 1720,1720 L	02/1990 → 09/1996
MK 1722 AK	12/1988 → 08/1994
MK 1722 K	12/1988 → 08/1994
MK 1722 L	12/1988 → 08/1994
MK 1722 S	12/1988 → 08/1994
MK 1722, 1722 L, 1722 LL	12/1988 → 08/1994
MK 1722,1722 L, 1722 LL	12/1988 → 08/1994
MK 1726 AK	06/1989 → 08/1994
MK 1726 K	12/1988 → 08/1994
MK 1726 L, 1726 LL	12/1988 → 08/1994
MK 1726 LL	12/1988 → 08/1994
MK 1726 S,1726 LS	12/1988 → 08/1994
MK 1726,1726 L, 1726 LL	12/1988 → 08/1994
MK 1727 L	12/1988 → 08/1994
MK 1729 LS	07/1988 → 08/1994
MK 1733 S,1733 LS	01/1989 → 07/1992
MK 1733,1733 L, 1734 L	12/1987 → 09/1996
MK 1820 K	05/1992 → 09/1996
MK 1820,1820 L	01/1991 → 09/1996
MK 1824 AK	08/1992 → 09/1996
MK 1824 K	08/1992 → 09/1996
MK 1827 AK	08/1992 → 09/1996
MK 1827 S,1827 LS	12/1990 → 09/1996
MK 1827,1827 L	12/1990 → 09/1996
MK 1831 K	12/1990 → 08/1994
MK 1831 S,1831 LS	12/1990 → 09/1996
MK 1831,1831 L	12/1990 → 09/1996
MK 1834 S,1834 LS	01/1991 → 09/1996
MK 1834,1834 L	01/1991 → 09/1996
MK 2327 L	02/1993 → 09/1996
MK 2420,2420 L	02/1990 → 08/1994
MK 2422 , 2422 L	09/1989 → 08/1994
MK 2422 B	09/1989 → 08/1994
MK 2422 K	09/1989 → 08/1994
MK 2422,2422 L	09/1989 → 08/1994
MK 2426 B	02/1990 → 08/1994
MK 2426 L	01/1990 → 08/1994
MK 2426, 2426 L	02/1990 → 08/1994
MK 2427 L	07/1992 → 09/1996
MK 2433 K	09/1989 → 07/1992
MK 2433 L	05/1989 → 07/1992

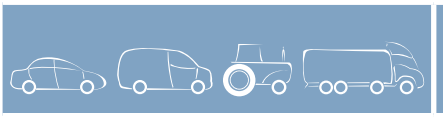



063534699820 MAN2011 55A 24V

MERCEDES-BENZ	
MK 2433 S	09/1989 → 07/1992
MK 2433 S,2433 LS	05/1989 → 07/1992
MK 2433,2433 L, 2434 L	12/1987 → 09/1996
MK 2524 K	06/1992 → 09/1996
MK 2524 L	06/1992 → 09/1996
MK 2524,2524 L	06/1992 → 09/1996
MK 2527 B	03/1991 → 09/1996
MK 2527 L	09/1992 → 08/1994
MK 2531 B	12/1990 → 09/1996
MK 2531 L	12/1990 → 09/1996
MK 2531,2531 L	12/1990 → 09/1996
MK 2534 K	01/1991 → 09/1996
MK 2534 S,2534 LS	01/1991 → 09/1996
MK 2534,2534 L	01/1991 → 09/1996
NG 1222	11/1986 → 02/1990
NG 1414	11/1986 → 03/1991
NG 1614	11/1986 → 03/1991
NG 1638	11/1986 → 12/1986
NG 1644	11/1986 → 08/1989
NG 1922	11/1986 → 10/1990
NG 1933	11/1986 → 03/1991
NG 1935	11/1986 → 09/1989
NG 1936	11/1986 → 03/1991
NG 1938	11/1986 → 06/1990
NG 1944	11/1986 → 12/1989
NG 2222	11/1986 → 03/1991
NG 2225	11/1986 → 03/1991
NG 2228	11/1986 → 03/1991
NG 2233	11/1986 → 05/1987
NG 2236	11/1986 → 03/1991
NG 2422	11/1986 → 06/1989
NG 2433	11/1986 → 11/1991
NG 2438	11/1986 → 12/1986
NG 2628	11/1986 → 03/1991
NG 2633	11/1986 → 05/1987
NG 2635	11/1986 → 03/1991
NG 2636	11/1986 → 03/1991
NG 2638	11/1986 → 12/1986
NG 2644	11/1986 → 02/1990
NG 3028	11/1986 → 08/1989
NG 3033	11/1986 → 05/1987
NG 3036	11/1986 → 08/1989
NG 3038	11/1986 → 12/1986
NG 3235	07/1988 → 08/1994




063534699820 MAN2011 55A 24V

MERCEDES-BENZ

NG 3328	11/1986 → 07/1987
NG 3333	11/1986 → 11/1991
NG 3336	11/1986 → 11/1991
NG 3338	11/1986 → 12/1986
NG 3528	07/1987 → 07/1987
NG 3544	09/1987 → 03/1992
NG 1217 KO	05/1983 → 09/1985
NG 1222 A	11/1986 → 10/1990
NG 1222 AF	11/1986 → 12/1991
NG 1222 F	11/1986 → 12/1991
NG 1222 S	11/1986 → 02/1990
NG 1414 K	11/1986 → 03/1991
NG 1417 C	11/1986 → 03/1991
NG 1417 CA	11/1986 → 03/1991
NG 1417 CAK	11/1986 → 03/1991
NG 1417 CK	11/1986 → 03/1991
NG 1420 LS	11/1986 → 03/1991
NG 1420,1420 L	11/1986 → 03/1991
NG 1422 F	11/1986 → 10/1990
NG 1422 S, 1422 LS	11/1986 → 10/1990
NG 1422,1422 L	11/1986 → 10/1990
NG 1425 S,1425 LS	11/1986 → 03/1991
NG 1614 K	11/1986 → 03/1991
NG 1617 C,1617 CL	11/1986 → 03/1991
NG 1617 CAK	11/1986 → 03/1991
NG 1617 CK	11/1986 → 03/1991
NG 1617 CS	11/1986 → 03/1991
NG 1620,1620 L	11/1986 → 03/1991
NG 1622 AK	11/1986 → 10/1989
NG 1622 K	11/1986 → 10/1989
NG 1622 S	11/1986 → 03/1991
NG 1622,1622 L	11/1986 → 03/1991
NG 1625 AK	11/1986 → 11/1989
NG 1625 K	11/1986 → 11/1989
NG 1625 S,1625 LS	11/1986 → 02/1990
NG 1625,1625 L	11/1986 → 02/1990
NG 1628 A	11/1986 → 05/1989
NG 1628 S,1628 LS	11/1986 → 05/1989
NG 1628,1628 L	11/1986 → 05/1989
NG 1633 S,1633 LS	11/1986 → 05/1987
NG 1633,1633 L	11/1986 → 05/1987
NG 1635 K	11/1986 → 07/1989
NG 1635 S,1635 LS	11/1986 → 07/1989
NG 1635,1635 L	11/1986 → 07/1989




063534699820 MAN2011 55A 24V

MERCEDES-BENZ

NG 1636 S,1636 LS	11/1986 → 03/1991
NG 1636,1636 L	11/1986 → 03/1991
NG 1638 S,1638 LS	11/1986 → 12/1986
NG 1644 S,1644 LS	11/1986 → 08/1989
NG 1922 AK	11/1986 → 03/1991
NG 1922 K	11/1986 → 10/1990
NG 1922 S	11/1986 → 10/1990
NG 1928 A	11/1986 → 03/1991
NG 1928 AK	11/1986 → 03/1991
NG 1928 AS	11/1986 → 03/1991
NG 1928 K	11/1986 → 05/1989
NG 1928 S,1928 LS	11/1986 → 01/1989
NG 1928,1928 L	11/1986 → 03/1991
NG 1933 S,1933 LS	11/1986 → 03/1991
NG 1935 AK	09/1987 → 03/1991
NG 1935 AS	09/1987 → 03/1991
NG 1935 S,1935 LS	11/1986 → 09/1989
NG 1936 AK	11/1986 → 03/1991
NG 1936 AS	11/1986 → 03/1991
NG 1936 K	11/1986 → 03/1991
NG 1936 S,1936 LS	11/1986 → 03/1991
NG 1938 S,1938 LS	11/1986 → 06/1990
NG 1944 S,1944 LS	11/1986 → 12/1989
NG 2025 S	11/1986 → 03/1991
NG 2028 A	11/1986 → 06/1989
NG 2028 LS	11/1986 → 06/1989
NG 2033 LS	11/1986 → 05/1987
NG 2035 S,2035 LS	11/1986 → 07/1989
NG 2036 LS	11/1986 → 03/1991
NG 2220,2220 L	11/1986 → 03/1991
NG 2222 B	11/1986 → 03/1991
NG 2222 K	11/1986 → 03/1991
NG 2222 L	11/1986 → 03/1991
NG 2222,2222 L	11/1986 → 03/1991
NG 2225 B	11/1986 → 03/1991
NG 2225 L	11/1986 → 03/1991
NG 2228 S	11/1986 → 03/1991
NG 2228,2228 L	11/1986 → 03/1991
NG 2233 S	11/1986 → 05/1987
NG 2233,2233 L	11/1986 → 05/1987
NG 2235 K	11/1986 → 07/1989
NG 2235 S, 2235 LS	11/1986 → 07/1989
NG 2235,2235 L	11/1986 → 07/1989
NG 2236 S	11/1986 → 03/1991




063534699820 MAN2011 55A 24V

MERCEDES-BENZ

NG 2238 S	11/1986 → 12/1986
NG 2238,2238 L	11/1986 → 12/1986
NG 2244 S	11/1986 → 07/1989
NG 2244,2244 L	11/1986 → 07/1989
NG 2422 K	11/1986 → 06/1989
NG 2438 L	11/1986 → 12/1986
NG 2444 LS	11/1986 → 02/1991
NG 2528 A	11/1986 → 03/1991
NG 2528 AK	11/1986 → 03/1991
NG 2536 AK	11/1986 → 03/1991
NG 2628 A	11/1986 → 03/1991
NG 2628 AK	11/1986 → 03/1991
NG 2628 AS	11/1986 → 03/1991
NG 2628 B	11/1986 → 08/1989
NG 2628 K	11/1986 → 03/1991
NG 2628 S	11/1986 → 03/1991
NG 2633 S	11/1986 → 05/1987
NG 2635 A	09/1987 → 03/1991
NG 2635 AK	09/1987 → 03/1991
NG 2635 AS	09/1987 → 03/1991
NG 2635 S	11/1986 → 03/1991
NG 2636 A	11/1986 → 03/1991
NG 2636 AK	11/1986 → 03/1991
NG 2636 AS	11/1986 → 03/1991
NG 2636 K	11/1986 → 03/1991
NG 2636 S	11/1986 → 03/1991
NG 2638 S	11/1986 → 12/1986
NG 2644 S	11/1986 → 02/1990
NG 3025 B	11/1986 → 07/1987
NG 3025 K	11/1986 → 07/1987
NG 3028 B	11/1986 → 07/1987
NG 3028 K	11/1986 → 07/1987
NG 3228 B	07/1987 → 03/1991
NG 3228 K	07/1987 → 03/1991
NG 3250 A	11/1986 → 08/1994
NG 3250 AF	11/1986 → 08/1994
NG 3328 B	11/1986 → 07/1987
NG 3328 K	11/1986 → 07/1987
NG 3333 B	11/1986 → 11/1991
NG 3333 K	11/1986 → 11/1991
NG 3336 A	11/1986 → 03/1991
NG 3336 AK	11/1986 → 11/1991
NG 3336 K	11/1986 → 11/1991
NG 3336 S	11/1986 → 11/1991

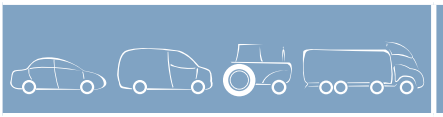


063534699820 MAN2011 55A 24V

MERCEDES-BENZ

NG 3528 B	07/1987 → 09/1989
NG 3528 K	07/1987 → 07/1987
NG 3528 K	07/1987 → 09/1989
NG 3535 AK	09/1987 → 02/1990
NG 3535 K	09/1987 → 01/1989
NG 3544 S	09/1987 → 03/1992
NG 3836 AK	11/1986 → 03/1991
NG 3850 A	11/1986 → 08/1994
O 309 O 309 B	11/1986 → 02/1989
O 309 O 309 D	11/1986 → 02/1989
SK 1922	03/1991 → 08/1994
SK 1935	03/1991 → 08/1994
SK 1948	03/1991 → 07/1992
SK 2024	02/1993 → 08/1996
SK 2031	03/1992 → 09/1996
SK 2038	11/1991 → 08/1996
SK 2050	03/1991 → 09/1996
SK 2429	03/1991 → 08/1994
SK 2435	03/1991 → 08/1994
SK 2448	07/1988 → 07/1992
SK 2531	05/1991 → 09/1996
SK 2538	03/1991 → 08/1996
SK 2544	01/1994 → 08/1996
SK 2550	07/1991 → 08/1996
SK 2629	07/1988 → 08/1994
SK 2631	06/1992 → 08/1996
SK 2635	07/1988 → 08/1994
SK 3229	09/1989 → 08/1994
SK 3235	10/1988 → 07/1992
SK 3238	10/1990 → 09/1996
SK 3244	01/1994 → 09/1996
SK 3535	10/1988 → 08/1994
SK 3538	03/1991 → 09/1996
SK 3544	07/1992 → 09/1996
SK 3548	05/1992 → 07/1992
SK 1728, 1729, 1729 L	07/1988 → 08/1994
SK 1729 AK	07/1988 → 09/1993
SK 1729 K	03/1991 → 08/1994
SK 1729 S,1729 LS	07/1988 → 08/1994
SK 1735 AK	08/1989 → 08/1994
SK 1735 K	03/1991 → 08/1994
SK 1735 L	07/1988 → 08/1994
SK 1735 S,1735 LS	03/1991 → 08/1994
SK 1735,1735 L	03/1991 → 08/1994




063534699820 MAN2011 55A 24V

MERCEDES-BENZ

SK 1748 S,1748 LS	03/1991 → 07/1992
SK 1748,1748 L	03/1991 → 07/1992
SK 1831 AK	05/1991 → 09/1996
SK 1831 K	07/1992 → 09/1996
SK 1831 S,1831 LS	07/1987 → 09/1996
SK 1831,1831 L	07/1987 → 09/1996
SK 1838 AK	12/1992 → 09/1996
SK 1838 K	03/1991 → 09/1996
SK 1838 S,1838 LS	03/1991 → 09/1996
SK 1838,1838 L	03/1991 → 09/1996
SK 1840 LS	07/1991 → 07/1992
SK 1844 S,1844 LS	11/1991 → 08/1996
SK 1844,1844 L	11/1991 → 08/1996
SK 1922 AK	03/1991 → 08/1994
SK 1922 K	03/1991 → 08/1994
SK 1922 S	03/1991 → 08/1994
SK 1929 A	03/1991 → 08/1994
SK 1929 AS	03/1991 → 08/1994
SK 1935 AK	03/1991 → 08/1994
SK 1935 AS	03/1991 → 08/1994
SK 1935 K	03/1991 → 08/1994
SK 1935 S	03/1991 → 08/1994
SK 1945 AK	07/1988 → 08/1994
SK 2024 AK	02/1993 → 08/1996
SK 2024 K	02/1993 → 08/1996
SK 2027 AK	02/1993 → 08/1996
SK 2031 A	03/1992 → 08/1996
SK 2031 AS	03/1992 → 08/1996
SK 2031 K	03/1992 → 08/1996
SK 2031 S	03/1992 → 08/1996
SK 2038 AS	12/1992 → 08/1996
SK 2038 S	11/1991 → 08/1996
SK 2050 S	03/1991 → 09/1996
SK 2055 AF	01/1992 → 09/1996
SK 2422 L	07/1987 → 06/1989
SK 2429 K	03/1991 → 08/1994
SK 2429 S	03/1991 → 08/1994
SK 2429 S,2429 LS	03/1991 → 08/1994
SK 2429, 2429 L	03/1991 → 08/1994
SK 2435 K	03/1991 → 08/1994
SK 2435 LS	03/1991 → 08/1994
SK 2435 S	03/1991 → 08/1994
SK 2435 S,2435 LS	03/1991 → 08/1994
SK 2435,2435 L	03/1991 → 08/1994




063534699820 MAN2011 55A 24V

MERCEDES-BENZ

SK 2448 LS	07/1988 → 07/1992
SK 2448 S	07/1988 → 07/1992
SK 2448,2448 L	07/1988 → 07/1992
SK 2531, 2531 L	03/1991 → 09/1996
SK 2538 K, 2538 LK	03/1991 → 08/1996
SK 2538 S	03/1991 → 08/1996
SK 2538 S,2538 LS	03/1991 → 08/1996
SK 2538,2538 L	03/1991 → 08/1996
SK 2544 LS	01/1992 → 08/1996
SK 2544 S	01/1992 → 08/1996
SK 2544, 2544 L	01/1992 → 08/1996
SK 2550 S, 2550 LS	07/1991 → 08/1996
SK 2550,2550 L	01/1991 → 08/1996
SK 2629 A	07/1988 → 08/1994
SK 2629 AK	07/1988 → 08/1994
SK 2629 AS	07/1988 → 08/1994
SK 2629 B	07/1988 → 08/1994
SK 2629 K	07/1988 → 08/1994
SK 2629 S	07/1988 → 08/1994
SK 2631 A	06/1992 → 08/1996
SK 2631 AK, 2634 AK	06/1992 → 08/1996
SK 2631 AS	06/1992 → 08/1996
SK 2631 B	06/1992 → 08/1996
SK 2631 S	06/1992 → 08/1996
SK 2635 A	02/1990 → 08/1994
SK 2635 AK	02/1990 → 08/1994
SK 2635 AS	02/1992 → 08/1994
SK 2635 K	07/1988 → 08/1994
SK 2635 S	07/1988 → 08/1994
SK 2638 A	09/1991 → 09/1996
SK 2638 AK	07/1992 → 09/1996
SK 2638 AS	07/1992 → 09/1996
SK 2638 K	09/1991 → 08/1996
SK 2638, 2638 L	09/1991 → 08/1996
SK 2644 A	01/1992 → 09/1996
SK 2644 S	01/1992 → 09/1996
SK 2644, 2644 L	01/1992 → 09/1996
SK 2648 AK	02/1990 → 07/1992
SK 2648 S	12/1988 → 07/1992
SK 2650 AK	07/1992 → 08/1994
SK 2650 AS	01/1994 → 09/1996
SK 2650 K	07/1992 → 08/1994
SK 2650 S	07/1992 → 09/1996
SK 2650, 2650 L	07/1992 → 09/1996




063534699820 MAN2011 55A 24V

MERCEDES-BENZ	
SK 3053 S	12/1993 → 09/1996
SK 3229 B	09/1989 → 07/1992
SK 3229 K	09/1989 → 01/1992
SK 3233 B	10/1990 → 07/1992
SK 3233 K	10/1990 → 07/1992
SK 3234 B	02/1992 → 09/1996
SK 3234 K	02/1992 → 09/1996
SK 3235 K	07/1987 → 07/1992
SK 3235 L	07/1988 → 08/1994
SK 3238 L	10/1990 → 09/1996
SK 3238, 3238 L	03/1991 → 09/1996
SK 3244 L	03/1991 → 09/1996
SK 3535 AK	02/1990 → 08/1994
SK 3535 B	10/1988 → 08/1994
SK 3535 K	10/1988 → 08/1994
SK 3538 AK	05/1992 → 09/1996
SK 3538 K	03/1991 → 09/1996
SK 3544 AK	07/1992 → 09/1996
SK 3544 K	07/1992 → 09/1996
SK 3550 K	05/1992 → 09/1996
SK 3550 S	05/1992 → 09/1996
SK 3550 S, 3553 S	05/1992 → 09/1996
SK 4850 A	07/1987 → 08/1996
T2/L Cassone / Furgonato / Promiscuo L 508 DG (309.411, 309.412, 309.413, 309.414, 309.415, 309.4..)	11/1986 → 12/1988
T2/L Cassone / Furgonato / Promiscuo L 608 D (310.311, 310.312, 310.313, 310.314, 310.315, 310.31..)	11/1986 → 12/1988
T2/L Cassone / Furgonato / Promiscuo L 613 D (310.510, 313.424, 313.427, 313.429)	11/1986 → 12/1988
T2/L Pianale piatto/Telaio L 508 DG (309.400, 309.401, 309.402, 309.403, 309.404, 309.4..)	11/1986 → 12/1988
T2/L Pianale piatto/Telaio L 608 D (310.300, 310.301, 310.302, 310.303, 310.304, 310.30..)	11/1986 → 12/1988
T2/L Pianale piatto/Telaio L 613 D (313.402, 313.404)	11/1986 → 12/1988
T2/L Ribaltabile L 608 D (310.340, 310.341, 310.342, 310.344, 310.345, 310.44..)	11/1986 → 12/1988
T2/L Ribaltabile LKO 508 DG (309.440, 309.441, 309.442, 309.444, 309.445)	11/1986 → 06/1988
T2/LN1 Cabina con motore 809 DT (670.199)	02/1992 →
T2/LN1 Cassone / Furgonato / Promiscuo 809 D (670.061, 670.062, 670.063)	02/1992 → 12/1994

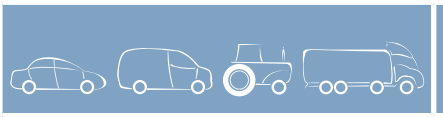


063534699820 MAN2011 55A 24V

MERCEDES-BENZ	
T2/LN1 Cassone / Furgonato / Promiscuo 811 D (670.362, 670.363)	02/1992 → 12/1994
T2/LN1 Cassone / Furgonato / Promiscuo 814 D (670.364, 670.365, 670.366)	06/1994 → 12/1994
T2/LN1 Cassone / Furgonato / Promiscuo 814 DA 4x4 (670.464, 670.465)	06/1994 → 12/1994
T2/LN1 Pianale piatto/Telaio 814 D (670.312, 670.313)	06/1994 → 12/1994
T2/LN1 Pianale piatto/Telaio 814 DA 4x4 (670.411, 670.412)	06/1994 → 12/1994
T2/LN1 Ribaltabile 809 DK (670.041, 670.042)	02/1992 → 12/1994
T2/LN1 Ribaltabile 811 DK (670.341, 670.342)	02/1992 → 12/1994
UNIMOG U 1550L	05/1988 → 04/2000
UNIMOG U 1600	05/1991 → 09/2002
UNIMOG U 1650,U 1650L	01/1996 → 02/2001
UNIMOG U 1700	09/1988 → 02/2001
UNIMOG U 1700T	05/1991 → 02/2001
UNIMOG U 1750,U 1750L	09/1988 → 02/2001
UNIMOG U 1800	04/1992 → 08/2002
UNIMOG U 1800T	04/1992 → 08/2002
UNIMOG U 1850,U 1850L	04/1992 → 08/2002
UNIMOG U 2100	09/1989 → 02/2001
UNIMOG U 2100T	09/1989 → 08/2002
UNIMOG U 2150	09/1989 → 02/2001
UNIMOG U 2150,U 2150L	05/1991 → 08/2002
UNIMOG U 2400	05/1991 → 08/2002
UNIMOG U 2400TG	07/1993 → 08/2002
UNIMOG U 2450,U 2450L	07/1993 → 08/2002
UNIMOG U 2450L	07/1993 → 08/2002

063534881590 MAN2012 55A 12V

OPEL	
ASTRA F (56_, 57_) 1.4	09/1991 → 09/1993
ASTRA F (56_, 57_) 1.4 i	09/1991 → 02/1998
ASTRA F 2 volumi /Coda spiovente (53_, 54_, 58_, 59_) 1.4	09/1991 → 09/1993
ASTRA F 2 volumi /Coda spiovente (53_, 54_, 58_, 59_) 1.4 i	03/1992 → 01/1998
ASTRA F Station wagon (51_, 52_) 1.4	09/1991 → 09/1993
ASTRA F Station wagon (51_, 52_) 1.4 i	09/1991 → 01/1998
ASTRA F Van (55_) 1.4 i	10/1991 → 02/1998
COMBO (71_) 1.2	09/1994 → 10/2001
COMBO (71_) 1.4	09/1994 → 10/2001




063534881590 MAN2012 55A 12V

OPEL

CORSA A 2 volumi /Coda spiovente (93_, 94_, 98_, 99_) 1.2 i	09/1989 → 03/1993
CORSA A 2 volumi /Coda spiovente (93_, 94_, 98_, 99_) 1.3	03/1986 → 10/1989
CORSA A 2 volumi /Coda spiovente (93_, 94_, 98_, 99_) 1.3 i	09/1986 → 09/1990
CORSA A 2 volumi /Coda spiovente (93_, 94_, 98_, 99_) 1.4 i	01/1990 → 03/1993
CORSA A 2 volumi /Coda spiovente (93_, 94_, 98_, 99_) 1.4 S	01/1990 → 03/1993
CORSA A 2 volumi /Coda spiovente (93_, 94_, 98_, 99_) 1.6 GSI	05/1988 → 09/1992
CORSA A 2 volumi /Coda spiovente (93_, 94_, 98_, 99_) 1.6 GSI Cat.	02/1992 → 03/1993
CORSA A Furgonato 1.2	09/1986 → 07/1990
CORSA A Furgonato 1.3	03/1986 → 04/1989
CORSA A TR (91_, 92_, 96_, 97_) 1.2 i	09/1990 → 03/1993
CORSA A TR (91_, 92_, 96_, 97_) 1.3	03/1986 → 10/1987
CORSA A TR (91_, 92_, 96_, 97_) 1.4 i	01/1990 → 03/1993
CORSA A TR (91_, 92_, 96_, 97_) 1.4 S	01/1990 → 03/1993
CORSA B (73_, 78_, 79_) 1.2 i	03/1993 → 08/2000
CORSA B (73_, 78_, 79_) 1.4 i	03/1993 → 08/2000
KADETT E (39_, 49_) 1.3 i Cat.	09/1988 → 08/1991
KADETT E (39_, 49_) 1.3 N	09/1988 → 08/1989
KADETT E (39_, 49_) 1.4 i	01/1990 → 08/1991
KADETT E (39_, 49_) 1.4 S	01/1990 → 08/1991
KADETT E (39_, 49_) 1.6 i	09/1987 → 08/1991
KADETT E (39_, 49_) 1.6 i Cat.	09/1986 → 08/1991
KADETT E (39_, 49_) 1.6 S	09/1984 → 08/1991
KADETT E 2 volumi /Coda spiovente (33_, 34_, 43_, 44_) 1.3 i Cat.	09/1988 → 08/1991
KADETT E 2 volumi /Coda spiovente (33_, 34_, 43_, 44_) 1.3 N	09/1988 → 08/1991
KADETT E 2 volumi /Coda spiovente (33_, 34_, 43_, 44_) 1.4 i	01/1990 → 08/1991
KADETT E 2 volumi /Coda spiovente (33_, 34_, 43_, 44_) 1.4 S	01/1990 → 08/1991
KADETT E 2 volumi /Coda spiovente (33_, 34_, 43_, 44_) 1.6 i	09/1987 → 08/1991
KADETT E 2 volumi /Coda spiovente (33_, 34_, 43_, 44_) 1.6 i Cat.	09/1986 → 08/1991
KADETT E 2 volumi /Coda spiovente (33_, 34_, 43_, 44_) 1.6 S	09/1984 → 08/1991
KADETT E Cabriolet (43B_) 1.4 i	01/1990 → 08/1991




063534881590 MAN2012 55A 12V

OPEL

KADETT E Cabriolet (43B_) 1.6 i	09/1987 → 02/1993
KADETT E Cabriolet (43B_) 1.6 i Cat.	10/1987 → 08/1991
KADETT E Combo (38_, 48_) 1.3 N	09/1988 → 12/1989
KADETT E Combo (38_, 48_) 1.4 i	08/1991 → 07/1994
KADETT E Combo (38_, 48_) 1.4 S	01/1990 → 08/1991
KADETT E Combo (38_, 48_) 1.6	09/1986 → 08/1991
KADETT E Combo (38_, 48_) 1.6 i	08/1991 → 07/1994
KADETT E Furgonato (37_, 47_) 1.3 N	09/1988 → 07/1989
KADETT E Furgonato (37_, 47_) 1.4 i	01/1990 → 08/1991
KADETT E Furgonato (37_, 47_) 1.6 i	08/1989 → 08/1993
KADETT E Station wagon (35_, 36_, 45_, 46_) 1.3 i Cat.	09/1988 → 08/1991
KADETT E Station wagon (35_, 36_, 45_, 46_) 1.3 N	09/1988 → 08/1991
KADETT E Station wagon (35_, 36_, 45_, 46_) 1.4 i	01/1990 → 08/1991
KADETT E Station wagon (35_, 36_, 45_, 46_) 1.4 S	01/1990 → 08/1991
KADETT E Station wagon (35_, 36_, 45_, 46_) 1.6	09/1986 → 08/1991
KADETT E Station wagon (35_, 36_, 45_, 46_) 1.6 i	09/1987 → 08/1991
KADETT E Station wagon (35_, 36_, 45_, 46_) 1.6 i Cat.	09/1986 → 08/1991
KADETT E Station wagon (35_, 36_, 45_, 46_) 1.6 S	09/1984 → 08/1986
VECTRA A (86_, 87_) 1.4 S	09/1988 → 06/1992
VECTRA A (86_, 87_) 1.6 i	09/1988 → 08/1995
VECTRA A (86_, 87_) 1.6 i Cat.	09/1988 → 08/1995
VECTRA A 2 volumi /Coda spiovente (88_, 89_) 1.4 S	09/1988 → 06/1992
VECTRA A 2 volumi /Coda spiovente (88_, 89_) 1.6	09/1992 → 07/1993
VECTRA A 2 volumi /Coda spiovente (88_, 89_) 1.6 i	09/1993 → 08/1995
VECTRA A 2 volumi /Coda spiovente (88_, 89_) 1.6 i Cat.	09/1988 → 08/1995

VAUXHALL

ASTRA Mk II 2 volumi /Coda spiovente 1.3	09/1988 → 08/1991
ASTRA Mk III (F) 1.4 i	09/1991 → 02/1998
ASTRA Mk III (F) 2 volumi /Coda spiovente 1.4 i	09/1991 → 02/1998
ASTRA Mk III (F) 2 volumi /Coda spiovente 1.4 S	09/1991 → 02/1998




063534881590 MAN2012 55A 12V	
VAUXHALL	
ASTRA Mk III (F) Station wagon 1.4 i	09/1991 → 02/1998
ASTRA Mk III (F) Station wagon 1.4 S	09/1991 → 09/1993
ASTRAVAN Mk III (F) 1.4 i	01/1991 → 10/1994
CAVALIER Mk III (87) 1.4 S	09/1988 → 11/1995
CAVALIER Mk III (87) 1.6 i	09/1988 → 11/1995
CAVALIER Mk III 2 volumi /Coda spiovente 1.4 S	09/1988 → 11/1995
CAVALIER Mk III 2 volumi /Coda spiovente 1.6 i	09/1988 → 11/1995
COMBO Mk I (B) 1.2	07/1994 → 10/2001
COMBO Mk I (B) 1.4	09/1994 → 10/2001
CORSA Mk II (B) 1.2 i	09/1994 → 08/2000
CORSA Mk II (B) 1.4 i	09/1994 → 08/2000
CORSAVAN Mk II (B) 1.4 i	09/1994 → 08/2000
NOVA 1.2 N	01/1985 → 10/1987
NOVA 1.3 S	05/1983 → 10/1987
NOVA 2 volumi /Coda spiovente 1.2 i	01/1985 → 10/1989
NOVA 2 volumi /Coda spiovente 1.3 S	05/1983 → 10/1989
NOVA 2 volumi /Coda spiovente 1.6	05/1989 → 08/1990

063534881850 MAN2013 55A 12V	
DEUTZ	
F 2L 511 Tutte	01/1963 → 01/1975
DEUTZ-FAHR	
D - 2807 Tutte	09/1988 → 01/1993
D - 3607 Tutte	09/1988 → 01/1993
D - 7007 Tutte	09/1988 → 01/1994
DX - 3.10A Tutte	09/1988 → 01/1994
DX - 3.10V/F Tutte	06/1986 → 12/1991
DX - 3.30A Tutte	09/1988 → 01/1994
DX - 3.30V/F Tutte	09/1988 →
DX - 3.50A Tutte	09/1988 → 01/1994
DX - 3.50V/F Tutte	09/1988 →
DX - 3.60A Tutte	09/1988 → 01/1994
DX - 3.70A Tutte	09/1988 → 01/1994
DX - 3.70V/F Tutte	09/1988 →
DX - 3.80 Tutte	09/1988 → 01/1994
DX - 3.90A Tutte	09/1988 → 01/1994
DX - 3.90V/F Tutte	09/1988 →
DX - 4.10 Tutte	09/1988 → 01/1994
DX - 4.30A Tutte	09/1988 →
DX - 4.31 Tutte	01/1991 → 12/1991
DX - 4.50A Tutte	09/1988 → 01/1994
DX - 4.51 Tutte	01/1990 → 12/1991
DX - 4.70A Tutte	09/1988 → 01/1994

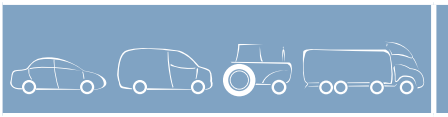


063534881850 MAN2013 55A 12V	
DEUTZ-FAHR	
DX - 6.05/6.10A Tutte	09/1988 → 01/1994
DX - 6.30A Tutte	09/1988 → 01/1994
DX - 6.31A Tutte	01/1990 → 01/1994
DX - 6.50A Tutte	09/1988 → 01/1994
DX - 6.60 Tutte	10/1988 → 12/1991
DX - 7.10A Tutte	09/1988 → 01/1994
INTRAC - 2004 Tutte	09/1988 →
M - 1080 Tutte	09/1988 →
M - 1202 Tutte	09/1988 →
M - 980 Tutte	01/1981 → 08/1988
FENDT	
FARM 275	→
FARM 200S	09/1988 →
FARM 200S/FL146	09/1988 →
FARM 200V/FL145	09/1988 →
FARM 203P/FL156	09/1988 →
FARM 203V/FL155	09/1988 →
FARM 204P/FL166	09/1988 →
JW (JENBACHER WERKE)	
COMPRESSOR JW - 1000	09/1988 →
COMPRESSOR JW - 370	09/1988 →
COMPRESSOR JW - 550	09/1988 →
COMPRESSOR JW - 750	09/1988 →
KRAMER	
516 Tutte	09/1988 →
212 - E Tutte	06/1988 →
LINDE	
H - 20 Tutte	09/1988 →
H - 25 Tutte	09/1988 →
H - 30 Tutte	09/1988 →
H - 35 Tutte	09/1988 →
H - 40 Tutte	09/1988 →
H - 70 Tutte	09/1988 →
STEYR	
FARM 8055	10/1992 →
FARM 8065	09/1986 →
FARM 8070	10/1992 →
FARM 8075	10/1992 →
FARM 8080	06/1984 →
FARM 8085	10/1992 →
FARM 8090	10/1992 →
FARM 8110	10/1992 →
FARM 8130	10/1992 →
FARM 8150	10/1992 →



063534881850 MAN2013 55A 12V	
STEYR	
FARM 8165	10/1992 →
FARM 8320	05/1987 → 06/1989
FARM 8060T	02/1987 →
TRACK MARSHALL	
D Series D 110	01/1990 →
D Series D 135	01/1990 →
D Series D 150	01/1990 →
D Series D 642	01/1990 →
D Series D 644	01/1990 →
D Series D 742	01/1990 →
D Series D 744	01/1990 →
D Series D 842	01/1990 →
D Series D 844	01/1990 →
D Series D 944	01/1990 →
VM MOTORI	
HR - 394HPT Tutte	01/1986 →
HR - 492HT9 Tutte	09/1980 →
HR - 494HP Tutte	01/1986 →
HR - 494HT10 Tutte	03/1986 →
HR - 694H,HT Tutte	01/1984 → 12/1990

063534882060 MAN2014 45A 24V	
BELL	
GRADERS 670CH	01/1997 →
CASE IH	
455 Tutte	01/1989 → 01/1994
488 Tutte	01/1987 → 12/1992
621 Tutte	01/1989 → 01/1993
721 Tutte	01/1989 → 01/1993
821 Tutte	01/1989 → 01/1993
888 Tutte	01/1988 → 12/1992
921 Tutte	01/1991 → 01/1993
988 Tutte	11/1996 →
1088 Tutte	01/1990 → 12/1992
1068B Tutte	01/1989 → 12/1994
1085C Tutte	01/1990 →
1155E Tutte	01/1990 → 01/1994
170C Tutte	01/1988 → 12/1994
220B Tutte	01/1989 → 12/1994
455C Tutte	01/1990 → 01/1994
855D/E Tutte	01/1990 → 01/1994
9010/9010B Tutte	01/1989 → 12/1994
9020/9020B Tutte	01/1994 → 01/1998
9030/9030B Tutte	01/1994 → 01/1998
CRAWLER TRACTOR 1550	01/1985 → 12/1996

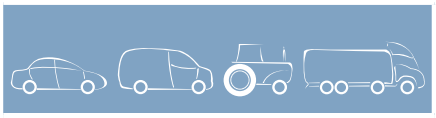

063534882060 MAN2014 45A 24V	
CASE IH	
CRAWLER TRACTOR 1150E	01/1987 → 12/1996
CRAWLER TRACTOR 1150G	01/1995 → 12/1999
CRAWLER TRACTOR 1155E	01/1987 → 12/1994
CRAWLER TRACTOR 450C	01/1989 → 01/1994
CRAWLER TRACTOR 850D	01/1987 → 12/1994
CRAWLER TRACTOR 850E	01/1992 → 12/1996
CRAWLER TRACTOR 850G	01/1994 → 12/1999
CX120 Tutte	01/2000 →
CX210 Tutte	01/2000 →
W11/W11B/W11C Tutte	01/1987 → 12/1994
W14C Tutte	01/1989 → 12/1994
CDC-CASE	
CRAWLER TRACTOR 1150,1550C	01/1989 → 01/1994
CRAWLER TRACTOR 1150E,1550	01/1989 → 01/1994
CRAWLER TRACTOR 450C,850D	01/1989 → 01/1994
CRAWLER TRACTOR 455,855D,1155E	01/1989 → 01/1994
EXCAVATORS 1088	01/1989 → 01/1994
EXCAVATORS 170C,220B,350	01/1989 → 01/1994
EXCAVATORS 488,688,888	01/1989 → 01/1994
Wheel Loaders 621-721	01/1989 → 01/1994
Wheel Loaders 821 -921	01/1989 → 01/1994
Wheel Loaders W11B,W14C,W36	01/1989 → 01/1994
CEDAR RAPIDS	
CEDAR RAPIDS 3042JP	01/1997 →
JOHN DEERE	
4045 Tutte	→
6068 Tutte	→
4045DFM70 Tutte	01/2004 → 01/2007
4045HF485 Tutte	→
4045TF280 Tutte	→
6068DF/HF/TF Tutte	→
6068DFM Tutte	→
6068TFM50 Tutte	→
6068TFM76 Tutte	01/2004 → 01/2007
CRAWLERS 655B	01/1982 → 01/1995
CRAWLERS 700H, LGP, LT, LXT	01/2000 →
CRAWLERS 750B/C/C-II	01/1982 → 01/1990
CRAWLERS 755B	01/1985 → 01/1995
CRAWLERS 850B/C/C-II	01/1982 → 01/2000
ENGINES 4045TF285	→
ENGINES 6068HF285	→
ENGINES 6068HF485	→
EXCAVATORS 110	01/1998 →

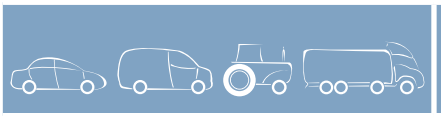


063534882060 MAN2014 45A 24V

JOHN DEERE	
EXCAVATORS 120C	→
EXCAVATORS 160C/LC	→
EXCAVATORS 190E	→
EXCAVATORS 200C/LC	01/1995 →
EXCAVATORS 230C/LC/LCR	→
EXCAVATORS 270C/LC	01/1997 →
EXCAVATORS 330LC/LCR	01/1998 →
EXCAVATORS 370C/LC	01/1998 →
EXCAVATORS 450C/LC	→
EXCAVATORS 490E	→
EXCAVATORS 690E/LC	→
EXCAVATORS 790E/LC	→
EXCAVATORS 792D/LC	01/1993 →
EXCAVATORS 892E/892E/LC	→
EXCAVATORS 992E/992E/LC	01/1994 →
GRADERS 570B	01/1971 → 12/1981
GRADERS 670B/C	01/1982 →
GRADERS 670C-II/670CH/670CH-II	→
GRADERS 672B/C	01/1988 →
GRADERS 672CH/672CH-II	01/1997 →
GRADERS 770B/BH	01/1982 →
GRADERS 770C	→
GRADERS 772B/BH/CH/CH-II	01/1982 →
HANDLERS 3200Telescopic	→
HANDLERS 3400Telescopic	→
LOADERS 344G	01/1994 → 12/1998
LOADERS 344H	01/1998 →
LOADERS 444G/H	01/1994 →
LOADERS 544H/J	01/1997 →
TOOL CARRIERS TC44H	01/1997 →
TOOL CARRIERS TC54H	01/1997 →
TOOL CARRIERS TC62H	01/1997 →
KOMATSU	
D41A Tutte	09/1995 →
D41E Tutte	08/1995 →
D41P Tutte	03/1995 →
ONAN (USA)	
ALL MODELS - 24V System Tutte	01/1989 → 01/1994
TIMBERJACK	
FORESTRY - PROCESSOR FELLER BUNCHERS - 740	01/2001 →
FORESTRY - PROCESSOR FELLER BUNCHERS - 840	01/2001 →

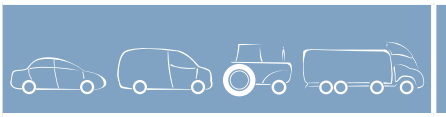


063534882530 MAN2015 35A 24V

IVECO	
EuroCargo 100 E 15	01/1991 → 08/2000
EuroCargo 100 E 15 K	01/1991 → 08/2000
EuroCargo 100 E 18	01/1991 → 11/2000
EuroCargo 100 E 18 K	01/1991 → 11/2000
EuroCargo 100 E 21	01/1991 → 11/2000
EuroCargo 120 E 15	12/1991 → 07/2000
EuroCargo 120 E 15 K	01/1992 → 07/2000
EuroCargo 120 E 18	01/1992 → 07/2000
EuroCargo 120 E 18 K	01/1992 → 07/2000
EuroCargo 130 E 15	01/1994 → 07/2000
EuroCargo 130 E 18	01/1992 → 07/2000
EuroCargo 130 E 18 K	01/1992 → 07/2000
EuroCargo 135 E 18 W	01/1997 → 07/2000
EuroCargo 135 E 18 WR	01/1994 → 12/1996
EuroCargo 150 E 15	01/1992 → 12/1996
EuroCargo 150 E 15 K	01/1992 → 12/1996
EuroCargo 150 E 18	01/1992 → 07/2000
EuroCargo 150 E 18 K	01/1992 → 07/2000
EuroCargo 170 E 18 K, 180 E 18 K	01/1994 → 07/2000
EuroCargo 170 E 18, 180 E 18	01/1994 → 07/2000
EuroCargo 180 E 21 T	04/1992 → 07/2000
EuroCargo 60 E 10	01/1991 → 08/1996
EuroCargo 60 E 14	01/1991 → 12/1996
EuroCargo 60 E 14 K	01/1991 → 12/1996
EuroCargo 65 E 10	01/1991 → 12/1996
EuroCargo 65 E 10 K	01/1991 → 12/1996
EuroCargo 75 E 15 K	01/1991 → 12/1992
EuroCargo 75 E 15, 80 E 15	01/1991 → 12/1992
EuroCargo 80 E 15	01/1991 → 08/2000
EuroCargo 80 E 15 K	01/1991 → 08/2000
EuroCargo 80 E 18	01/1991 → 08/2000
EuroCargo 80 E 18 K	01/1991 → 08/2000
EuroCargo 80 E 21	01/1991 → 08/2000
EuroCargo 95 E 15 W	11/1993 → 08/2000
EuroCargo 95 E 21 W	11/1993 → 12/2000

063534892520 MAN2035 55A 12V

FORD	
ESCORT '81 Express (AVA) 1.6 D	02/1984 → 12/1985
ESCORT '86 Express (AVF) 1.6 D	02/1986 → 12/1988
ESCORT III (GAA) 1.6 D	02/1984 → 12/1985
ESCORT III Station wagon (AWA) 1.6 D	02/1984 → 12/1985
ESCORT IV (GAF, AWF, ABFT) 1.6 D	01/1986 → 12/1988
ESCORT IV Station wagon (AWF, AVF) 1.6 D	01/1986 → 12/1988
ESCORT V (GAL) 1.8 D	07/1990 → 12/1992




063534892520 MAN2035 55A 12V

FORD			
ESCORT V Station wagon (GAL, AVL) 1.8 D	07/1990	→	12/1992
FIESTA Furgonato (FVD) 1.4	10/1986	→	02/1989
FIESTA Furgonato (FVD) 1.6 D	04/1984	→	02/1989
FIESTA II (FBD) 1.3 (FBD)	09/1983	→	12/1985
FIESTA II (FBD) 1.4	09/1983	→	01/1987
FIESTA II (FBD) 1.4 (FBD)	01/1986	→	02/1989
FIESTA II (FBD) 1.6 XR2 (FBD)	03/1984	→	02/1989
FIESTA III (GFJ) 1.4	03/1989	→	12/1995
FIESTA III (GFJ) 1.4 Cat.	01/1994	→	12/1995
FIESTA III (GFJ) 1.6	03/1989	→	01/1994
FIESTA III (GFJ) 1.6 Turbo (FBJT)	07/1990	→	10/1992
FIESTA III (GFJ) 1.6 XR2i	03/1989	→	01/1994
ORION I (AFD) 1.6 D	04/1984	→	12/1985
ORION II (AFF) 1.6 D	04/1986	→	01/1989
SIERRA 2 volumi /Coda spiovente (GBC) 1.3	08/1982	→	10/1984
SIERRA 2 volumi /Coda spiovente (GBC) 1.6	10/1982	→	12/1986
SIERRA 2 volumi /Coda spiovente (GBC) 1.8	10/1984	→	10/1984
SIERRA 2 volumi /Coda spiovente (GBC) 2.0	08/1982	→	10/1984
SIERRA Station wagon (BNC) 1.6	08/1982	→	10/1984
SIERRA Station wagon (BNC) 1.8	10/1984	→	10/1984
SIERRA Station wagon (BNC) 2.0	08/1982	→	10/1984
TAUNUS (GBTS, GBFS, CBTS) 1.3	05/1975	→	07/1979
TAUNUS (GBTS, GBFS, CBTS) 1.6	05/1975	→	07/1979
TAUNUS Turnier (GBNS) 1.3	05/1975	→	07/1979
TAUNUS Turnier (GBNS) 2.0	05/1975	→	07/1979
TRANSIT Autobus (V_ _) 2.4 D (VAS, VBL, VIL, VUL, VZS)	12/1977	→	10/1986
ROVER			
100 (METRO) (XP) 114 GSi	10/1994	→	10/1995

063534893260 MAN2017 70A 12V

MERCEDES-BENZ			
190 (W201) 2.0 (201.023)	09/1988	→	05/1990
190 (W201) 2.3	09/1987	→	09/1988
190 (W201) D 2.0 (201.122)	09/1983	→	08/1993
190 (W201) D 2.5 (201.126)	04/1985	→	08/1993
190 (W201) E 1.8 (201.018)	04/1990	→	08/1993
190 (W201) E 2.0	10/1982	→	08/1993
190 (W201) E 2.0 (201.024)	09/1985	→	08/1989
190 (W201) E 2.3	09/1989	→	08/1991
190 (W201) E 2.3 (201.028)	10/1986	→	08/1993
190 (W201) E 2.3-16	09/1985	→	08/1988
190 (W201) E 2.3-16 (201.034)	04/1985	→	01/1987
190 (W201) E 2.5-16	09/1988	→	08/1993
190 (W201) E 2.6	09/1986	→	12/1989




063534893260 MAN2017 70A 12V

MERCEDES-BENZ			
190 (W201) E 2.6 (201.029)	09/1986	→	08/1993
190 (W201) E Evolution II 2.5	05/1990	→	08/1993
190 (W201) Turbo-D 2.5 (201.128)	02/1988	→	08/1993
CLASSE E (W124) E 200 D (124.120)	07/1993	→	06/1995
CLASSE E (W124) E 250 Turbo-D (124.128)	07/1993	→	06/1995
CLASSE E (W124) E 300 4-matic (124.230)	06/1993	→	06/1995
CLASSE E (W124) E 300 Turbo-D 4-matic (124.333)	06/1993	→	06/1995
CLASSE E Station wagon (S124) E 250 Turbo D	07/1993	→	06/1995
CLASSE E Station wagon (S124) E 300 T 4-matic (124.290)	06/1993	→	06/1996
CLASSE E Station wagon (S124) E 300 T Turbo-D 4-matic (124.393)	07/1993	→	05/1996
COUPE (C124) 230 CE (124.043)	03/1987	→	08/1992
COUPE (C124) 230 CE (124.043) Cat.	06/1989	→	08/1992
COUPE (C124) 300 CE	03/1987	→	12/1989
COUPE (C124) 300 CE (124.050)	03/1987	→	05/1993
KOMBI Station wagon (S124) 200 T (124.080)	09/1985	→	05/1990
KOMBI Station wagon (S124) 200 T D (124.180)	09/1985	→	08/1991
KOMBI Station wagon (S124) 200 TE	09/1988	→	12/1989
KOMBI Station wagon (S124) 200 TE (124.081)	09/1988	→	08/1992
KOMBI Station wagon (S124) 230 TE (124.083)	09/1985	→	08/1992
KOMBI Station wagon (S124) 250 T D (124.185)	09/1985	→	06/1993
KOMBI Station wagon (S124) 260 TE FGST.	09/1985	→	08/1992
KOMBI Station wagon (S124) 300 T D (124.190)	09/1986	→	06/1993
KOMBI Station wagon (S124) 300 T Turbo-D	09/1986	→	06/1993
KOMBI Station wagon (S124) 300 TE (124.090)	01/1986	→	08/1992
KOMBI Station wagon (S124) 300 TE 4-matic (124.290)	09/1986	→	06/1993
SL (R107) 300 SL (107.041)	09/1985	→	08/1989
Tre volumi (W124) 200	01/1986	→	05/1990
Tre volumi (W124) 200 (124.020)	12/1985	→	05/1990
Tre volumi (W124) 200 D (124.120)	12/1984	→	06/1993
Tre volumi (W124) 200 E (124.021)	09/1988	→	08/1992
Tre volumi (W124) 230 E (124.023)	04/1985	→	06/1993
Tre volumi (W124) 250 D (124.125)	04/1985	→	06/1993




063534893260 MAN2017 70A 12V

MERCEDES-BENZ	
Tre volumi (W124) 250 Turbo-D (124.128)	09/1988 → 06/1993
Tre volumi (W124) 260 E (124.026)	09/1985 → 08/1992
Tre volumi (W124) 260 E 4-matic (124.226)	09/1986 → 08/1992
Tre volumi (W124) 300 D (124.130)	08/1989 → 06/1993
Tre volumi (W124) 300 D 4-matic (124.330)	09/1986 → 06/1993
Tre volumi (W124) 300 E	01/1985 → 08/1992
Tre volumi (W124) 300 E (124.030)	08/1985 → 08/1992
Tre volumi (W124) 300 E 4-matic (124.230)	09/1986 → 06/1993
Tre volumi (W124) 300 Turbo-D (124.133)	09/1988 → 06/1993
Tre volumi (W124) 300 Turbo-D 4-matic (124.333)	09/1986 → 06/1993

063534893700 MAN2018 65A 12V

SEAT	
TOLEDO I (1L) 1.6 i	05/1991 → 10/1993
TOLEDO I (1L) 1.8 i	05/1991 → 11/1993
TOLEDO I (1L) 2.0 i	05/1991 → 10/1993
VW	
GOLF II (19E, 1G1) 1.6	12/1990 → 07/1992
GOLF II (19E, 1G1) 1.8	12/1990 → 10/1991
GOLF II (19E, 1G1) 1.8 GTI	12/1990 → 10/1991
GOLF II (19E, 1G1) 1.8 i Cat.	12/1990 → 10/1991
GOLF II (19E, 1G1) 1.8 i Syncro Cat.	12/1990 → 10/1991
JETTA II (19E, 1G2) 1.6	07/1991 → 07/1992
JETTA II (19E, 1G2) 1.8	11/1990 → 10/1991
JETTA II (19E, 1G2) 1.8 Syncro	11/1990 → 07/1991
PASSAT (32B) 1.6 D	08/1985 → 03/1988
PASSAT (32B) 1.6 TD	08/1985 → 03/1988
PASSAT Tre volumi (32B) 1.6 TD	08/1985 → 03/1988
PASSAT Variant (32B) 1.6 D	08/1985 → 03/1988
PASSAT Variant (32B) 1.6 TD	08/1985 → 03/1988
TRANSPORTER IV Autobus (70XB, 70XC, 7DB, 7DW) 1.8	06/1991 → 07/1992
TRANSPORTER IV Autobus (70XB, 70XC, 7DB, 7DW) 2.0	06/1991 → 04/2003
TRANSPORTER IV Furgonato (70XA) 2.0	06/1991 → 04/2003

063534897070 MAN2019 27A 24V

IVECO	
P/PA 160-23 AH	04/1984 → 02/1988
P/PA 160-23 AHW	04/1984 → 02/1988
P/PA 190-25 AH	07/1983 → 06/1986
P/PA 190-25 AHW	07/1983 → 06/1986
P/PA-Haubenfahrzeuge 120-13 ANW	01/1983 → 05/1983
P/PA-Haubenfahrzeuge 120-16 ANW,120-17 ANW	01/1983 → 05/1983

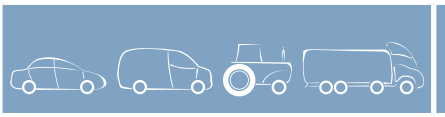


063534897070 MAN2019 27A 24V

IVECO	
P/PA-Haubenfahrzeuge 150-16 AN	01/1983 → 05/1983
P/PA-Haubenfahrzeuge 150-16 ANW	01/1983 → 12/1991
P/PA-Haubenfahrzeuge 160-23 ANW	04/1984 → 02/1988
P/PA-Haubenfahrzeuge 190-25 ANT	07/1983 → 06/1986
P/PA-Haubenfahrzeuge 260-25 AN	07/1983 → 06/1986
P/PA-Haubenfahrzeuge 260-25 ANW	07/1983 → 06/1986
STEYR	
1390-Serie 1390.180	01/1971 → 01/1972
990-Serie 990.180	01/1968 → 05/1973

063535150200 MAN2024 120A 12V

FORD	
GALAXY (WGR) 1.9 TDI	09/1998 → 05/1999
SEAT	
ALHAMBRA (7V8, 7V9) 1.9 TDI	05/1997 → 02/1999
CORDOBA (6K2/C2) 1.9 SDI	08/1996 → 06/1999
CORDOBA (6K2/C2) 1.9 TDI	08/1996 → 06/1999
CORDOBA 2 volumi /Coda spiovente (6K2) 1.9 TDI	06/1999 → 10/2002
CORDOBA Vario (6K5) 1.9 TDI	06/1999 → 12/2002
IBIZA II (6K1) 1.9 SDI	08/1996 → 08/1999
IBIZA II (6K1) 1.9 TDI	08/1996 → 06/1999
INCA (6K9) 1.7 D	09/1996 → 09/2000
INCA (6K9) 1.9 SDI	12/1995 → 09/2000
TOLEDO I (1L) 1.9 TDI	08/1995 → 03/1999
VW	
CADDY II Furgonato (9K9A) 1.7 SDI	07/1996 → 09/2000
CADDY II Furgonato (9K9A) 1.9 SDI	10/1996 → 09/2000
CADDY II Furgonato (9K9A) 1.9 TDI	10/1996 → 09/2000
CADDY II Station wagon (9K9B) 1.7 SDI	07/1996 → 09/2000
CADDY II Station wagon (9K9B) 1.9 SDI	11/1995 → 09/2000
CADDY II Station wagon (9K9B) 1.9 TDI	12/1996 → 09/2000
GOLF III (1H1) 1.9 TDI	04/1996 → 08/1997
GOLF III (1H1) 1.9 TDI Syncro (1HX1)	08/1996 → 08/1997
GOLF III Cabriolet (1E7) 1.9 TDI	08/1996 → 04/1998
GOLF III Variant (1H5) 1.9 TDI	04/1996 → 02/1999
GOLF IV Cabriolet (1E7) 1.9 TDI	06/1998 → 12/2001
POLO CLASSIC (6KV2) 110 1.9 TDI	08/1998 → 08/1999
POLO CLASSIC (6KV2) 57 1.7 SDI	11/1997 → 08/1999
POLO CLASSIC (6KV2) 90 1.9 TDI	09/1996 → 08/1999
POLO Variant (6KV5) 1.7 SDI	11/1997 → 08/1999
POLO Variant (6KV5) 1.9 TDI	06/1997 → 08/1999
SHARAN (7M8, 7M9, 7M6) 1.9 TDI	09/1996 → 04/1999
VENTO (1H2) 1.9 TDI	09/1993 → 09/1998




063535150440 MAN2030 120A 12V

IVECO	
DAILY II Cassone / Furgonato / Promiscuo 29 L 11 V	05/1999 → 09/2002
DAILY II Cassone / Furgonato / Promiscuo 29 L 13	05/2001 → 03/2006
DAILY II Cassone / Furgonato / Promiscuo 29 L 9 V	11/2001 → 09/2002
DAILY II Cassone / Furgonato / Promiscuo 35 S 11 V,35 C 11 V	05/1999 → 09/2002
DAILY II Cassone / Furgonato / Promiscuo 35 S 13 V,35 C 13 V	05/1999 → 03/2006
DAILY II Cassone / Furgonato / Promiscuo 35 S 15 V, 35 C 15 V (A6HCV3B2, A6HBV4B2, A6HC41B2, A6HC42B2)	11/2002 → 03/2006
DAILY II Cassone / Furgonato / Promiscuo 35 S 9 V	11/2001 → 03/2006
DAILY II Cassone / Furgonato / Promiscuo 35 S 9 V,35 C 9 V	05/1999 → 03/2006
DAILY II Cassone / Furgonato / Promiscuo 40 C 13	01/2001 → 09/2004
DAILY II Cassone / Furgonato / Promiscuo 40 C 15	04/2003 → 09/2004
DAILY II Cassone / Furgonato / Promiscuo 50 C 11	05/1999 → 09/2002
DAILY II Cassone / Furgonato / Promiscuo 50 C 13	05/1999 → 09/2004
DAILY II Cassone / Furgonato / Promiscuo 50 C 15	05/2001 → 09/2004
DAILY II Cassone / Furgonato / Promiscuo 65 C 15	11/2001 → 09/2004
DAILY II Pianale piatto/Telaio 29 L 11	05/1999 → 09/2002
DAILY II Pianale piatto/Telaio 29 L 13	11/2001 → 03/2006
DAILY II Pianale piatto/Telaio 29 L 9	11/2001 → 09/2002
DAILY II Pianale piatto/Telaio 35 C 15	11/2001 →
DAILY II Pianale piatto/Telaio 35 C 9, 35 S 9	11/2001 → 03/2006
DAILY II Pianale piatto/Telaio 35 S 11,35 C 11	05/1999 → 12/2001
DAILY II Pianale piatto/Telaio 35 S 13,35 C 13	05/1999 → 03/2006
DAILY II Pianale piatto/Telaio 35 S 9,35 C 9	05/1999 → 09/2002
DAILY II Pianale piatto/Telaio 40 C 13	01/2001 → 09/2004
DAILY II Pianale piatto/Telaio 40 C 15	04/2003 → 09/2004
DAILY II Pianale piatto/Telaio 50 C 11	05/1999 → 09/2002
DAILY II Pianale piatto/Telaio 50 C 13	05/1999 → 09/2004
DAILY II Pianale piatto/Telaio 50 C 15	05/2001 → 09/2004
DAILY II Pianale piatto/Telaio 65 C 15	11/2001 → 09/2004




063535250200 MAN2031 140A 12V

FIAT	
DUCATO Autobus (244, Z_) 2.3 JTD	04/2002 → 08/2006
DUCATO Autobus (250) 120 Multijet 2,3 D	07/2006 →
DUCATO Autobus (250) 130 Multijet 2,3 D	01/2007 →
DUCATO Furgonato (244) 2.3 JTD	04/2002 → 08/2006
DUCATO Furgonato (250) 120 Multijet 2,3 D	07/2006 →
DUCATO Furgonato (250) 130 Multijet 2,3 D	01/2007 →
DUCATO Pianale piatto/Telaio (244) 2.3 JTD	04/2002 → 08/2006
DUCATO Pianale piatto/Telaio (250) 120 Multijet 2,3 D	07/2006 →
DUCATO Pianale piatto/Telaio (250) 130 Multijet 2,3 D	01/2007 →

IVECO	
DAILY II Cassone / Furgonato / Promiscuo 29 L 10 V (ALJA43A2, ALJA42A2, ALJA41A2)	09/2002 → 03/2006
DAILY II Cassone / Furgonato / Promiscuo 29 L 12 V (ALKA41A2, ALLA52A2, ALKA42A2)	09/2002 → 03/2006
DAILY II Cassone / Furgonato / Promiscuo 29 L 14	01/2005 → 03/2006
DAILY II Cassone / Furgonato / Promiscuo 35 C 12 V, 35 S 12 V (AGKA43A2, AGKB43A2, AGKB46A2, AGKC43A2)	09/2002 → 03/2006
DAILY II Cassone / Furgonato / Promiscuo 35 C 14, 35 S 14	01/2005 → 03/2006
DAILY II Cassone / Furgonato / Promiscuo 35 S 10 (ANJA41A1, ANJA42A2, ANJA42AB, ANJA43A, ANJAV1A, AGJ..)	09/2002 → 03/2006
DAILY II Pianale piatto/Telaio 29 L 10 (ALJA-V1A1, ALJA41AA, ALJA41A1, AHJA64A1, AHJA14A1, A..)	09/2002 → 03/2006
DAILY II Pianale piatto/Telaio 29 L 12 (ALKA41A1, AHKA64A1, ALLA51A1)	09/2002 → 03/2006
DAILY II Pianale piatto/Telaio 29 L 14 (AHRA11C1B1, AHRA14C1B1, AHRA64C1B1)	11/2005 → 03/2006
DAILY II Pianale piatto/Telaio 35 C 10 V , 35 S 10 V (AMJA11A1, AMJA14A1, AMJA64A1, AMJA65A..)	09/2002 → 03/2006
DAILY II Pianale piatto/Telaio 35 C 12 , 35 S 12 (AEKA14A1, AEKA14AA, AEKA64A1, AEKB11A1, A..)	09/2002 → 03/2006




063535250200 MAN2031 140A 12V

IVECO	
DAILY II Pianale piatto/Telaio 35 C 14, 35 S 14	01/2005 → 03/2006
DAILY III Cassone / Furgonato / Promiscuo 29L10 V	05/2006 → 05/2006
DAILY III Cassone / Furgonato / Promiscuo 29L12 V, 29L12 V/P	05/2006 → 05/2006
DAILY III Cassone / Furgonato / Promiscuo 29L14 C, 29L14 C/P, 29L14 V, 29L14 V/P	05/2006 → 05/2006
DAILY III Cassone / Furgonato / Promiscuo 35C10, 35S10	05/2006 →
DAILY III Cassone / Furgonato / Promiscuo 35C11 V, 35S11 V	06/2009 →
DAILY III Cassone / Furgonato / Promiscuo 35C12 V, 35C12 V/P, 35S12 V, 35S12 V/P	05/2006 → 05/2006
DAILY III Cassone / Furgonato / Promiscuo 35C13 V, 35C13 V/P, 35S13 V, 35S13 V/P	06/2009 →
DAILY III Cassone / Furgonato / Promiscuo 35S14 C, 35S14 C/P, 35S14 V, 35S14 V/P, 35C14 V, 35C14 V/P	05/2006 →
DAILY III Cassone / Furgonato / Promiscuo 40C10 V	05/2006 → 05/2009
DAILY III Cassone / Furgonato / Promiscuo 40C11 V	06/2009 →
DAILY III Cassone / Furgonato / Promiscuo 40C12 V, 40C14 V/P	05/2006 → 05/2009
DAILY III Cassone / Furgonato / Promiscuo 40C13 V, 40C13 V/P	06/2009 →
DAILY III Cassone / Furgonato / Promiscuo 40C14 V, 40C14 V/P, 40S14 V, 40S14 V/P	06/2009 →
DAILY III Pianale piatto/Telaio 29L10	05/2006 → 05/2006
DAILY III Pianale piatto/Telaio 29L12	05/2006 → 05/2006
DAILY III Pianale piatto/Telaio 29L14	05/2006 → 05/2006
DAILY III Pianale piatto/Telaio 35C10, 35S10	05/2006 → 05/2006
DAILY III Pianale piatto/Telaio 35C11, 35S11, 35S11 D	06/2009 →
DAILY III Pianale piatto/Telaio 35C12, 35S12	05/2006 → 05/2006
DAILY III Pianale piatto/Telaio 35C13, 35C13 /P, 35S13 D, 35S13, 35S13 /P	06/2009 →
DAILY III Pianale piatto/Telaio 35S14	05/2006 →
DAILY III Pianale piatto/Telaio 40C10, 40S10	05/2006 → 05/2009
DAILY III Pianale piatto/Telaio 40C11, 40C11 D, 40S11, 40S11 D	06/2009 →

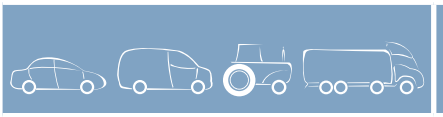


063535250200 MAN2031 140A 12V

IVECO	
DAILY III Pianale piatto/Telaio 40C12	05/2006 → 05/2009
DAILY III Pianale piatto/Telaio 40C13, 40C13 /P, 40S13 D, 40S13, 40S13 /P	06/2009 →
DAILY III Pianale piatto/Telaio 40C14, 40C14 /P, 40S14, 40S14 /P, 40S14 D, 40S14 D/P	06/2009 →
DAILY III Ribaltabile 35C10 K	05/2006 →
DAILY III Ribaltabile 35C11 K, 35C11 DK, 35S11 K, 35S11 DK	06/2009 →
DAILY III Ribaltabile 35C12	05/2006 → 05/2006
DAILY III Ribaltabile 35C13 K, 35C13 DK, 35S13 K, 35S13 DK	06/2009 →
DAILY III Ribaltabile 35S14 K, 35S14 DK	07/2007 →
DAILY III Ribaltabile 40C14 K, 40C14 DK, 40S14 K, 40S14 DK	06/2009 →
UAZ	
PATRIOT 2.3 D	01/2007 →

063535255000 MAN2025 90A 24V

IVECO	
EuroTech MH 190 E 24, 190 E 24 /P	08/2000 → 03/2006
EuroTech MH 190 E 27, 190 E 27 /P	08/2000 → 05/2004
EuroTech MH 190 E 31, 190 E 31 /P	08/2000 → 08/2003
EuroTech MH 190 E 35, 190 E 35 /P, 190 E 35 /FP	08/2000 → 08/2003
EuroTech MH 260 E 24 Y/P, 260 E 24 Y/PS, 260 E 24 Y/PT	08/2000 → 03/2006
EuroTech MH 260 E 27 Y/P, 260 E 27 Y/PS, 260 E 27 RY/PS, 260 E 27 RY/PT	08/2000 → 08/2003
EuroTech MH 260 E 31 Y/P, 260 E 31 Y/PS, 260 E 31 Y/PT	08/2000 → 08/2003
EuroTech MH 260 E 35 Y/P, 260 E 35 Y/PT, 260 E 35 Y/TN	08/2000 → 08/2003
EuroTech MH 400 E 31 TP, 440 E 31 T, 440 E 31 TP	08/2000 → 08/2003
EuroTech MH 400 E 35 TP, 440 E 35 T, 440 E 35 T/P, 440 E 35 T/FP	08/2000 → 08/2004
EuroTech MH 440 E 35 TX/P	08/2000 → 08/2003
EuroTech MH MH 190 E 24 K	08/2000 → 03/2006
EuroTech MH MH 190 E 27 K	08/2000 → 05/2004
EuroTech MH MH 190 E 31 K	08/2000 → 08/2003
EuroTrakker MP 180 E 24 W Cursor	08/2000 → 08/2004
EuroTrakker MP 190 E 24 H Cursor	08/2000 → 05/2004
EuroTrakker MP 190 E 31 H Cursor	08/2000 → 08/2004
EuroTrakker MP 190 E 31 W Cursor	08/2000 → 08/2004
EuroTrakker MP 190 E 35 H Cursor	08/2000 → 08/2004




063535255000 MAN2025 90A 24V

IVECO			
EuroTrakker MP 190 E 35 W Cursor	08/2000	→	08/2004
EuroTrakker MP 260 E 27 H Cursor	08/2000	→	08/2004
EuroTrakker MP 260 E 31 H Cursor	08/2000	→	08/2004
EuroTrakker MP 260 E 31 HB Cursor	01/2001	→	08/2004
EuroTrakker MP 260 E 35 H Cursor	08/2000	→	08/2004
EuroTrakker MP 260 E 35 W Cursor	08/2000	→	08/2004
EuroTrakker MP 260 E35 H Cursor	08/2000	→	08/2004
EuroTrakker MP 340 E 35 H Cursor	08/2000	→	08/2004
EuroTrakker MP 340 E 35 HB Cursor	01/2001	→	08/2004
EuroTrakker MP 380 E 35 H Cursor	08/2000	→	08/2004
EuroTrakker MP 380 E 35 W Cursor	08/2000	→	08/2004
EuroTrakker MP 400 E 35 HT Cursor	08/2000	→	08/2004
EuroTrakker MP 410 E 35 H Cursor	08/2000	→	08/2004
Stralis AD 190S27, AT 190S27	04/2004	→	03/2006
Stralis AD 190S27, AT 190S27	08/2003	→	03/2006
Stralis AD 190S30	04/2004	→	03/2006
Stralis AD 190S35	04/2004	→	03/2006
Stralis AD 190S35, AT 190S35, AD 190S36, AT 190S36	08/2003	→	03/2006
Stralis AD 260S27, AT 260S27	04/2004	→	03/2006
Stralis AD 260S30, AT 260S30	04/2004	→	03/2006
Stralis AD 260S31, AT 260S31	08/2003	→	03/2006
Stralis AD 260S35	04/2004	→	03/2006
Stralis AD 260S35, AT 260S35, AD 260S36, AT 260S36	08/2003	→	03/2006
Stralis AD 440S31, AT 440S31	08/2003	→	03/2006
Stralis AD 440S35, AT 440S35, AD 440S36, AT 440S36	08/2003	→	
Trakker AD 180T27 W, AT 180T27 W	06/2005	→	03/2006
Trakker AD 190T27, AT 190T27	06/2005	→	03/2006
Trakker AD 190T31 W, AT 190T31 W	10/2004	→	09/2006
Trakker AD 190T31, AT 190T31	10/2004	→	09/2006
Trakker AD 190T35 W, AD 190T36 W, AT 190T35 W, AT 190T36 W	10/2004	→	03/2006
Trakker AD 190T35 W, AT 190T35 W, AD 190T36 W, AT 190T36 W	01/2005	→	03/2006
Trakker AD 190T35, AD 190T36, AT 190T35, AT 190T36	10/2004	→	03/2006
Trakker AD 190T35, AT 190T35, AD 190T36, AT 190T36	06/2005	→	03/2006
Trakker AD 260T31 B	06/2005	→	03/2006
Trakker AD 260T31, AT 260T31	10/2004	→	03/2006
Trakker AD 260T35 B	06/2005	→	03/2006
Trakker AD 260T35 W, AT 260T35 W	06/2005	→	03/2006




063535255000 MAN2025 90A 24V

IVECO			
Trakker AD 260T35, 260T36, 380T36, AT 260T35, 260T36, 380T36	10/2004	→	03/2006
Trakker AD 260T35, AT 260T35	10/2004	→	03/2006
Trakker AD 340T35 B, AT 340T35 B	06/2005	→	03/2006
Trakker AD 340T35, AT 340T35	06/2005	→	03/2006
Trakker AD 380T35	01/2005	→	03/2006
Trakker AD 400T35 T, AT 400T35 T	06/2005	→	03/2006
Trakker AD 410T35	02/2005	→	03/2006

063535255010 MAN2026 100A 24V

MAN			
E 2000 19.310 FALK	05/2000	→	06/2003
E 2000 19.310 FALS	05/2000	→	06/2003
E 2000 19.310 FLK	05/2000	→	06/2003
E 2000 19.310 FLS	05/2000	→	06/2003
E 2000 19.360 FALK	07/2001	→	06/2003
E 2000 19.360 FALS	07/2001	→	06/2003
E 2000 19.360 FLK	07/2001	→	06/2003
E 2000 19.360 FLS	07/2001	→	06/2003
E 2000 19.410 FALK	07/2001	→	06/2003
E 2000 19.410 FALS	07/2001	→	06/2003
E 2000 19.410 FLK	07/2001	→	06/2003
E 2000 19.410 FLS	07/2001	→	06/2003
E 2000 19.460 FALK	07/2001	→	06/2003
E 2000 19.460 FALS	07/2001	→	06/2003
E 2000 19.460 FLK	07/2001	→	06/2003
E 2000 19.460 FLS	07/2001	→	06/2003
E 2000 26.360 FAVLC	05/2000	→	10/2003
E 2000 26.360 FAVLK	05/2000	→	10/2003
E 2000 26.410 DFARC	05/2000	→	10/2003
E 2000 26.410 DFRC, FAVLC	05/2000	→	10/2003
E 2000 26.410 FAVLK	05/2000	→	10/2003
E 2000 26.460 DFARC	05/2000	→	10/2003
E 2000 26.460 DFLRS	05/2000	→	10/2003
E 2000 26.460 FAVLC	05/2000	→	10/2003
E 2000 26.460 FAVLK	05/2000	→	10/2003
E 2000 28.310 FNLC	09/2002	→	06/2005
E 2000 28.360 FANLC	05/2000	→	11/2003
E 2000 28.360 FANLK	05/2000	→	11/2003
E 2000 28.360 FNALC	05/2000	→	11/2003
E 2000 28.360 FNLC	05/2000	→	11/2003
E 2000 28.410 FANLC	05/2000	→	11/2003
E 2000 28.410 FANLK	05/2000	→	11/2003
E 2000 28.410 FNLC	05/2000	→	11/2003
E 2000 28.460 FANLC	05/2000	→	11/2003

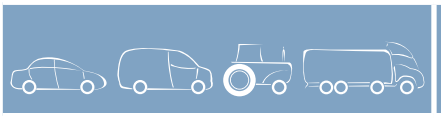


063535255010 MAN2026 100A 24V

MAN	
E 2000 28.460 FANLK	05/2000 → 11/2003
E 2000 28.460 FNLC	05/2000 → 11/2003
E 2000 30.310 FNLC	05/2000 → 06/2002
E 2000 30.360 FANLC	05/2000 → 06/2003
E 2000 30.360 FANLK	05/2000 → 06/2003
E 2000 30.360 FNLC	05/2000 → 06/2003
E 2000 30.410 FANLC	05/2000 → 06/2003
E 2000 30.410 FANLK	05/2000 → 06/2003
E 2000 30.410 FNLC	05/2000 → 06/2003
E 2000 30.460 FANLC	05/2000 → 06/2003
E 2000 30.460 FANLK	05/2000 → 06/2003
E 2000 30.460 FNLC	05/2000 → 06/2003
E 2000 32.310 VFLC	05/2000 → 08/2002
E 2000 32.310 VFNLC	05/2000 → 08/2002
E 2000 32.360 VFLC	05/2000 → 10/2003
E 2000 32.360 VFNLC	05/2000 → 10/2003
E 2000 32.410 VFARK	05/2000 → 10/2003
E 2000 32.410 VFLC,VFRC, VFLRC	05/2000 → 10/2003
E 2000 32.410 VFNLC	05/2000 → 10/2003
E 2000 32.460 VFLC, VFLRC	05/2000 → 10/2003
E 2000 32.460 VFNLC	05/2000 → 10/2003
E 2000 33.360 DFAK, DFALK	05/2000 → 06/2003
E 2000 33.360 DFALC	05/2000 → 06/2003
E 2000 33.360 DFALS	04/2001 → 06/2003
E 2000 33.360 DFLC	05/2000 → 06/2003
E 2000 33.360 DFLK	05/2000 → 06/2003
E 2000 33.360 DFLS	05/2000 → 06/2003
E 2000 33.410 DFAK, DFALK	05/2000 → 06/2003
E 2000 33.410 DFALC	05/2000 → 06/2003
E 2000 33.410 DFALS	04/2001 → 06/2003
E 2000 33.410 DFLC	05/2000 → 06/2003
E 2000 33.410 DFLK	05/2000 → 06/2003
E 2000 33.410 DFLS	05/2000 → 06/2003
E 2000 33.460 DFAK, DFALK	05/2000 → 06/2003
E 2000 33.460 DFALC	05/2000 → 06/2003
E 2000 33.460 DFALS	04/2001 → 06/2003
E 2000 33.460 DFLC	05/2000 → 06/2003
E 2000 33.460 DFLK	05/2000 → 06/2003
E 2000 33.460 DFLS	05/2000 → 06/2003
E 2000 35.360 VFAK	05/2000 → 09/2003
E 2000 35.410 FVNLC	05/2000 → 10/2003
E 2000 35.410 VFAK	05/2000 → 10/2003
E 2000 35.460 FVNLC	05/2000 → 10/2003
E 2000 35.460 VFAK	05/2000 → 10/2003

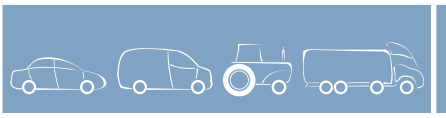


063535255010 MAN2026 100A 24V

MAN	
E 2000 41.410 VFAK	05/2000 → 09/2003
E 2000 41.460 DFVS, DFVLS	06/2000 → 09/2003
E 2000 41.460 VFAK	05/2000 → 09/2003
E 2000 50.410 VFAK	05/2000 → 09/2003
E 2000 50.410 VFAVK, VFAV-G	03/2001 → 09/2003
E 2000 50.410 VFK	05/2000 → 09/2003
E 2000 50.410 VFVK, VFV-G	10/2000 → 09/2003
E 2000 50.460 VFAK	05/2000 → 09/2003
E 2000 50.460 VFAVK, VFAV-G	03/2001 → 09/2003
E 2000 50.460 VFK	05/2000 → 09/2003
E 2000 50.460 VFVK, VFV-G	10/2000 → 09/2003
F 2000 19.314 FAC	05/2001 → 08/2002
F 2000 19.314 FAK, FA-KI	05/2001 → 08/2002
F 2000 19.314 FAS	06/1998 → 12/2001
F 2000 19.314 FC, FLC, FLLC, FLLW, FRC, FLRC, FLLRC, FLL, FLLR, F-N	06/1998 → 12/2001
F 2000 19.314 FK, FLK, F-KI, FL-KI	06/1998 → 08/2002
F 2000 19.314 FS, FLS, FLLS, FRS, FLRS, FLLRS	06/1998 → 12/2001
F 2000 19.364 FAC	06/1998 → 12/2001
F 2000 19.364 FAK, FA-KI	06/1998 → 09/2001
F 2000 19.364 FAS	06/1998 → 12/2001
F 2000 19.364 FC, FLC, FLLC, FLLW, FRC, FLRC, FLLRC, FLL, FLLR, F-N	06/1998 → 09/2001
F 2000 19.364 FK, FLK, F-KI, FL-KI	06/1998 → 12/2001
F 2000 19.364 FS, FLS, FLLS, FRS, FLRS, FLLRS	06/1998 → 12/2001
F 2000 19.373 FAC	01/1994 → 12/1995
F 2000 19.373 FAK, FA-KI	01/1994 → 12/1995
F 2000 19.373 FAS	01/1994 → 12/1995
F 2000 19.373 FC, FLC, FLLC, FRC, FLRC, F-NL	01/1994 → 12/1995
F 2000 19.373 FK, FLK, F-KI, FL-KI	01/1994 → 12/1995
F 2000 19.373 FS, FLS, FLLS, FRS, FLRS, FLLRS	01/1994 → 12/1995
F 2000 19.403 FAC	06/1996 → 12/2001
F 2000 19.403 FAK, FA-KI	06/1996 → 09/2001
F 2000 19.403 FAS	01/1994 → 12/2001
F 2000 19.403 FC, FLC, FLLC, FRC, FLRC, F-NL	01/1994 → 09/2001
F 2000 19.403 FK, FLK, F-KI, FL-KI	01/1994 → 12/2001
F 2000 19.403 FS, FLS, FLLS, FRS, FLRS, FLLRS	01/1994 → 12/2001
F 2000 19.414 FAC	06/1998 → 12/2001




063535255010 MAN2026 100A 24V

MAN			
F 2000 19.414 FAK, FA-KI	06/1998	→	12/2001
F 2000 19.414 FAS	06/1998	→	12/2001
F 2000 19.414 FC, FLC, FLLC, FRC, FLRC, FLLRC, FLL, FLLR, F-NL	06/1998	→	12/2001
F 2000 19.414 FK, FLK, F-KI, FL-KI	06/1998	→	12/2001
F 2000 19.414 FS, FLS, FLLS, FRS, FLRS, FLLRS	06/1998	→	12/2001
F 2000 19.423 FAC	01/1994	→	12/1995
F 2000 19.423 FAK, FA-KI	01/1994	→	12/1995
F 2000 19.423 FAS	01/1994	→	12/1995
F 2000 19.423 FC, FLC, FLLC, F-NL	01/1994	→	12/1995
F 2000 19.423 FK, FLK, F-KI, FL-KI	01/1994	→	12/1995
F 2000 19.423 FS, FLS, FLLS	01/1994	→	12/1995
F 2000 19.463 FAC	01/1994	→	12/2001
F 2000 19.463 FAK, FA-KI	01/1994	→	09/2001
F 2000 19.463 FAS	01/1994	→	12/2001
F 2000 19.463 FC, FLC, FLLC, FRC, FLRC, F-NL	01/1994	→	09/2001
F 2000 19.463 FK, FLK, F-KI, FL-KI	01/1994	→	12/2001
F 2000 19.463 FS, FLS, FLLS, FRS, FLRS, FLLRS	01/1994	→	09/2001
F 2000 19.464 FAC	06/1998	→	12/2002
F 2000 19.464 FAK, FA-KI	06/1998	→	07/2001
F 2000 19.464 FAS	06/1998	→	07/2001
F 2000 19.464 FC, FLC, FLLC, FLL, FRC, FLLR, FLLRC, FLLW, F-NL	06/1998	→	07/2001
F 2000 19.464 FK, FLK, F-KI, FL-KI	06/1998	→	07/2001
F 2000 19.464 FS, FLS, FLLS, FRS, FLRS, FLLRS	06/1998	→	07/2001
F 2000 23.314 FNLLC	05/2001	→	12/2002
F 2000 23.364 FNLLC	05/2001	→	12/2002
F 2000 23.403 FNLLC	01/1994	→	09/2001
F 2000 23.463 FNLLC	01/1994	→	09/2001
F 2000 24.314 FNLLRC	05/2001	→	08/2002
F 2000 24.364 FNLLRC	05/2001	→	09/2001
F 2000 24.373 FNLLC	01/1994	→	12/1995
F 2000 24.403 FNLLC	01/1994	→	09/2001
F 2000 24.414 FNLLRC	05/2001	→	12/2001
F 2000 24.423 FNLLC	01/1994	→	12/1995
F 2000 24.463 FNLLC	01/1994	→	09/2001
F 2000 24.464 FNLLRC	05/2001	→	09/2001
F 2000 26.314 DFC, DFLC	05/2001	→	06/2003
F 2000 26.314 DFK, DFLK	05/2001	→	06/2003
F 2000 26.314 DFS, DFLS	05/2001	→	06/2003




063535255010 MAN2026 100A 24V

MAN			
F 2000 26.314 DF-TM	05/2001	→	06/2003
F 2000 26.314 FNLC, FNLLC, FNLLRC, FNLLW, FVLC	05/2001	→	06/2003
F 2000 26.314 FNLS	05/2001	→	06/2003
F 2000 26.314 FVL-KO	05/2001	→	06/2003
F 2000 26.314 FVLS, FVLRS	05/2001	→	06/2003
F 2000 26.364 DFC, DFLC	05/2001	→	06/2003
F 2000 26.364 DFK, DFLK	05/2001	→	06/2003
F 2000 26.364 DFS, DFLS	05/2001	→	06/2003
F 2000 26.364 DF-TM	05/2001	→	06/2003
F 2000 26.364 FNLC, FNLLC, FNLLRC, FNLLW, FVLC	05/2001	→	06/2003
F 2000 26.364 FNLS	05/2001	→	06/2003
F 2000 26.364 FVL-KO	05/2001	→	06/2003
F 2000 26.364 FVLS, FVLRS	05/2001	→	06/2003
F 2000 26.373 DFC,26.373 DFLC	01/1994	→	12/1995
F 2000 26.373 DFK,26.373 DFLK	01/1994	→	12/1995
F 2000 26.373 DFS,26.373 DFLS	01/1994	→	12/1995
F 2000 26.373 FNLC,26.373 FNLLC,26.373 FVLC	01/1994	→	12/1995
F 2000 26.373 FNLS,26.373 FVLS	01/1994	→	12/1995
F 2000 26.403 DFC,26.403 DFLC	01/1994	→	08/2001
F 2000 26.403 DFK,26.403 DFLK	01/1994	→	08/2001
F 2000 26.403 DFS,26.403 DFLS	01/1994	→	08/2001
F 2000 26.403 FNLC,26.403 FNLLC,26.403 FVLC	01/1994	→	09/2001
F 2000 26.403 FNLS,26.403 FVLS	01/1994	→	09/2001
F 2000 26.414 DFC, DFLC	05/2001	→	09/2002
F 2000 26.414 DFK, DFLK	05/2001	→	09/2002
F 2000 26.414 DFS, DFLS	05/2001	→	09/2002
F 2000 26.414 DF-TM	05/2001	→	09/2002
F 2000 26.414 FNLC, FNLLC, FNLLRC, FNLLW, FVLC	05/2001	→	09/2002
F 2000 26.414 FNLS	05/2001	→	09/2002
F 2000 26.414 FVL-KO	05/2001	→	09/2002
F 2000 26.414 FVLS, FVLRS	05/2001	→	09/2002
F 2000 26.423 DFC,26.423 DFLC	01/1994	→	12/1995
F 2000 26.423 DFK,26.423 DFLK	01/1994	→	12/1995
F 2000 26.423 DFS,26.423 DFLS	01/1994	→	12/1995
F 2000 26.423 FNLC,26.423 FNLLC,26.423 FVLC	01/1994	→	12/1995
F 2000 26.423 FNLS,26.423 FVLS	01/1994	→	12/1995
F 2000 26.463 DFC, DFLC	01/1994	→	08/2001
F 2000 26.463 DFK,26.463 DFLK	01/1994	→	08/2001




063535255010 MAN2026 100A 24V

MAN	
F 2000 26.463 DFS,26.463 DFLS	01/1994 → 08/2001
F 2000 26.463 FNLC, FNLLC, FVLC	01/1994 → 08/2001
F 2000 26.463 FNLS,26.463 FVLS	01/1994 → 09/2001
F 2000 26.464 DFC, DFLC	05/2001 → 09/2002
F 2000 26.464 DFK, DFLK	05/2001 → 09/2002
F 2000 26.464 DFS, DFLS	05/2001 → 09/2002
F 2000 26.464 DF-TM	05/2001 → 09/2002
F 2000 26.464 FNLS	05/2001 → 09/2002
F 2000 26.464 FVL-KO	05/2001 → 09/2002
F 2000 26.464 FVLS, FVLRS	05/2001 → 09/2002
F 2000 27.314 DFAC	05/2001 → 08/2002
F 2000 27.314 DFAK, DFA-KI	05/2001 → 08/2002
F 2000 27.314 DFAS	05/2001 → 08/2002
F 2000 27.314 DFC	05/2001 → 08/2002
F 2000 27.314 DFK, DF-KI	05/2001 → 08/2002
F 2000 27.314 DFS	05/2001 → 08/2002
F 2000 27.314 DF-TM	05/2001 → 08/2002
F 2000 27.314 FVL	01/2000 → 08/2002
F 2000 27.364 DFAC	05/2001 → 09/2002
F 2000 27.364 DFAK, DFA-KI	05/2001 → 09/2002
F 2000 27.364 DFAS	05/2001 → 09/2002
F 2000 27.364 DFC	05/2001 → 09/2002
F 2000 27.364 DFK, DF-KI	05/2001 → 09/2002
F 2000 27.364 DFS	05/2001 → 09/2002
F 2000 27.364 DF-TM	05/2001 → 09/2002
F 2000 27.364 FVL	07/1999 → 09/2002
F 2000 27.373 DFAC	01/1994 → 12/1995
F 2000 27.373 DFAK, DFA-KI	01/1994 → 12/1995
F 2000 27.373 DFAS	01/1994 → 12/1995
F 2000 27.373 DFC	01/1994 → 12/1995
F 2000 27.373 DFK, DF-KI	01/1994 → 12/1995
F 2000 27.373 DFS	01/1994 → 12/1995
F 2000 27.403 DFAC	01/1994 → 09/2001
F 2000 27.403 DFAK, DFA-KI	01/1994 → 09/2001
F 2000 27.403 DFAS	01/1994 → 09/2001
F 2000 27.403 DFC	01/1994 → 09/2001
F 2000 27.403 DFK, DF-KI	01/1994 → 09/2001
F 2000 27.403 DFS	01/1994 → 09/2001
F 2000 27.414 DFAC	05/2001 → 08/2002
F 2000 27.414 DFAK, DFA-KI	05/2001 → 08/2002
F 2000 27.414 DFAS	05/2001 → 08/2002
F 2000 27.414 DFC	05/2001 → 08/2002
F 2000 27.414 DFK, DF-KI	05/2001 → 08/2002
F 2000 27.414 DFS	05/2001 → 08/2002

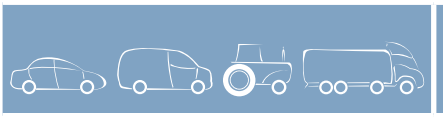


063535255010 MAN2026 100A 24V

MAN	
F 2000 27.414 DF-TM	05/2001 → 08/2002
F 2000 27.414 FVL	01/2000 → 08/2002
F 2000 27.423 DFAC	01/1994 → 12/1995
F 2000 27.423 DFAK, DFA-KI	01/1994 → 12/1995
F 2000 27.423 DFAS	01/1994 → 12/1995
F 2000 27.423 DFC	01/1994 → 12/1995
F 2000 27.423 DFK, DF-KI	01/1994 → 12/1995
F 2000 27.423 DFS	01/1994 → 12/1995
F 2000 27.463 DFAC	01/1994 → 09/2001
F 2000 27.463 DFAK, DFA-KI	01/1994 → 09/2001
F 2000 27.463 DFAS	01/1994 → 09/2001
F 2000 27.463 DFC	01/1994 → 09/2001
F 2000 27.463 DFK, DF-KI	01/1994 → 09/2001
F 2000 27.463 DFS	01/1994 → 09/2001
F 2000 27.463 DF-TM	07/2000 → 08/2002
F 2000 27.464 DFAC	05/2001 → 08/2002
F 2000 27.464 DFAK, DFA-KI	05/2001 → 08/2002
F 2000 27.464 DFAS	05/2001 → 08/2002
F 2000 27.464 DFK, DF-KI	05/2001 → 08/2002
F 2000 27.464 DFS	01/1994 → 09/2001
F 2000 27.464 DF-TM	05/2001 → 08/2002
F 2000 27.464 FVL	01/2000 → 08/2002
F 2000 32.314 VF, VFC	05/2001 → 12/2001
F 2000 32.314 VFK, VF-HK	05/2001 → 12/2001
F 2000 32.314 VF-TM	05/2001 → 12/2001
F 2000 32.364 VF, VFC	05/2001 → 09/2001
F 2000 32.364 VFK, VF-HK	05/2001 → 09/2001
F 2000 32.364 VF-TM	05/2001 → 09/2002
F 2000 32.403 VFC	08/1995 → 09/2001
F 2000 32.403 VFK	08/1995 → 09/2001
F 2000 32.414 VF, VFC	05/2001 → 12/2001
F 2000 32.414 VFK, VF-HK	05/2001 → 12/2001
F 2000 32.414 VF-TM	05/2001 → 12/2001
F 2000 32.463 VFC	08/1995 → 09/2001
F 2000 32.463 VFK	08/1995 → 09/2001
F 2000 32.464 VF, VFC	05/2001 → 12/2001
F 2000 32.464 VFK, VF-HK	05/2001 → 12/2001
F 2000 32.464 VF-TM	05/2001 → 12/2001
F 2000 33.364 DFAC	05/2001 → 09/2001
F 2000 33.364 DFAK, DFA-KI	05/2001 → 09/2001
F 2000 33.364 DFAS	05/2001 → 09/2001
F 2000 33.364 DFC	05/2001 → 09/2001
F 2000 33.364 DFK, DF-KI	05/2001 → 09/2001
F 2000 33.364 DFS, DFRS	05/2001 → 09/2001




063535255010 MAN2026 100A 24V

MAN			
F 2000 33.373 DFAC	01/1994	→	12/1995
F 2000 33.373 DFAK, DFA-KI	01/1994	→	12/1995
F 2000 33.373 DFAS	01/1994	→	12/1995
F 2000 33.373 DFC	01/1994	→	12/1995
F 2000 33.373 DFK, DF-KI	01/1994	→	12/1995
F 2000 33.373 DFS, DFRS	01/1994	→	12/1995
F 2000 33.403 DFAC	01/1994	→	09/2001
F 2000 33.403 DFAK, DFA-KI	01/1994	→	09/2001
F 2000 33.403 DFAS	01/1994	→	09/2001
F 2000 33.403 DFC	01/1994	→	09/2001
F 2000 33.403 DFK, DF-KI	01/1994	→	09/2001
F 2000 33.403 DFS, DFRS	01/1994	→	09/2001
F 2000 33.414 DFAC	05/2001	→	08/2002
F 2000 33.414 DFAK, DFA-KI	05/2001	→	08/2002
F 2000 33.414 DFAS	05/2001	→	08/2002
F 2000 33.414 DFC	05/2001	→	08/2002
F 2000 33.414 DFK, DF-KI	05/2001	→	08/2002
F 2000 33.414 DFS, DFRS	05/2001	→	08/2002
F 2000 33.423 DFAC	01/1994	→	12/1995
F 2000 33.423 DFAK, DFA-KI	01/1994	→	12/1995
F 2000 33.423 DFAS	01/1994	→	12/1995
F 2000 33.423 DFC	01/1994	→	12/1995
F 2000 33.423 DFK, DF-KI	01/1994	→	12/1995
F 2000 33.423 DFS, DFRS	01/1994	→	12/1995
F 2000 33.463 DFAC	01/1994	→	09/2001
F 2000 33.463 DFAK, DFA-KI	01/1994	→	09/2001
F 2000 33.463 DFAS	01/1994	→	09/2001
F 2000 33.463 DFC	01/1994	→	09/2001
F 2000 33.463 DFK, DF-KI	01/1994	→	09/2001
F 2000 33.463 DFS, DFRS	01/1994	→	09/2001
F 2000 33.464 DFAC	05/2001	→	
F 2000 33.464 DFAK, DFA-KI	05/2001	→	
F 2000 33.464 DFAS	05/2001	→	
F 2000 33.464 DFC	05/2001	→	
F 2000 33.464 DFK, DF-KI	05/2001	→	
F 2000 33.464 DFS, DFRS	05/2001	→	
F 2000 35.314 VF-TM	03/2002	→	09/2003
F 2000 35.364 VF, VFC, VFRC	05/2001	→	09/2001
F 2000 35.403 VF, VFC, VFRC	08/1995	→	09/2001
F 2000 35.414 VF, VFC, VFRC	09/2002	→	06/2003
F 2000 35.414 VFK, VF-HK, VF-KI	09/2002	→	06/2003
F 2000 35.414 VF-TM	09/2002	→	06/2003
F 2000 35.463 VF, VFC, VFRC	08/1995	→	09/2001
F 2000 35.463 VFK, VF-HK, VF-KI	08/1995	→	09/2001




063535255010 MAN2026 100A 24V

MAN			
F 2000 35.464 VF, VFC, VFRC	05/2001	→	08/2002
F 2000 35.464 VFK, VF-HK, VF-KI	03/2002	→	08/2002
F 2000 35.464 VF-TM	03/2002	→	08/2002
F 2000 40.403 DFAK	08/1995	→	09/2001
F 2000 40.403 DFAS	08/1995	→	09/2001
F 2000 40.403 DFK	08/1995	→	09/2001
F 2000 40.403 DFS	08/1995	→	09/2001
F 2000 40.414 DFAK	05/2001	→	08/2002
F 2000 40.414 DFK	05/2001	→	08/2002
F 2000 40.463 DFAK	08/1995	→	09/2001
F 2000 40.463 DFAS	08/1995	→	09/2001
F 2000 40.463 DFK	08/1995	→	09/2001
F 2000 40.463 DFS	08/1995	→	09/2001
F 2000 41.364 VF, VFC, VFRC	05/2001	→	08/2002
F 2000 41.364 VFK, VF-HK, VF-KI	03/2002	→	08/2002
F 2000 41.403 VF, VFC, VFRC	08/1995	→	09/2001
F 2000 41.403 VFK, VF-HK, VF-KI	08/1995	→	09/2001
F 2000 41.414 VF, VFC, VFRC	05/2001	→	08/2002
F 2000 41.414 VFK, VF-HK, VF-KI	03/2002	→	08/2002
F 2000 41.463 VF, VFC, VFRC	08/1995	→	09/2001
F 2000 41.463 VFK, VF-HK, VF-KI	08/1995	→	09/2001
F 2000 41.464 VF, VFC, VFRC	07/1999	→	08/2002
F 2000 41.464 VFK, VF-HK, VF-KI	03/2002	→	08/2002
L 2000 10.145 LC,10.145 LLC, LRC, LLRC (LE140C)	07/2001	→	12/2005
L 2000 10.145 LK, LRK, L-KI, LR-KI (LE140C)	07/2001	→	06/2002
L 2000 10.145 LLS, LLRS (LE140C)	07/2001	→	06/2002
L 2000 10.185 LAC, LAEC, LARC, LAERC, LA-LA, LAE-LF (LE180C)	09/2000	→	08/2002
L 2000 10.185 LAK, LAEK, LARK, LAERK (LE180C)	09/2000	→	08/2002
L 2000 10.185 LC,10.185 LLC, LRC, LLRC (LE180C)	09/2000	→	08/2002
L 2000 10.185 LK, LRK, L-KI, LR-KI (LE180C)	07/2001	→	08/2002
L 2000 10.185 LLS, LLRS (LE180C)	07/2001	→	08/2002
L 2000 10.225 LAC, LAEC, LARC, LAERC, LA-LF, LAE-LF (LE220C)	07/2001	→	08/2002
L 2000 10.225 LAK, LAEK, LARK, LAERK (LE220C)	07/2001	→	08/2002
L 2000 10.225 LC, 10.225 LLC, LRC, LLRC	07/2001	→	12/2006
L 2000 10.225 LC, 10.225 LLC, LRC, LLRC (LE220C)	07/2001	→	08/2002
L 2000 10.225 LK, LRK , L-KI, LR-KI(LE220C)	07/2001	→	08/2002

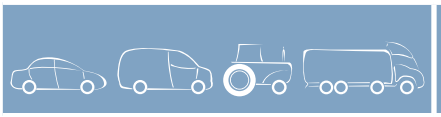



063535255010 MAN2026 100A 24V

MAN	
L 2000 10.225 LLS, LLRS (LE220C)	07/2001 → 08/2002
L 2000 12.185 LC, LLC	07/2001 → 12/2005
L 2000 12.225 LC, LLC (LE220C)	07/2001 → 06/2006
L 2000 8.145 LC,8.145 LLC, L-LF (LE140C)	09/2002 → 08/2004
L 2000 8.145 LLS, LLRS (LE140C)	09/2002 → 08/2004
L 2000 8.145 LRK, L-KI, LR-KILK (LE140C)	07/2001 → 08/2002
L 2000 8.185 LAC, LAEC, LARC, LAERC, LA-LF, LAE-LF (LE180C)	09/2000 → 08/2002
L 2000 8.185 LAK, LAEK, LARK, LAERK (LE180C)	07/2001 → 08/2002
L 2000 8.185 LC,8.185 LLC, LRC, LLRC, L-LF (LE180C)	09/2002 → 12/2005
L 2000 8.185 LK, LRK, L-KI, LR-KI (LE180C)	09/2000 →
L 2000 8.185 LLS, LLRS (LE180C)	09/2000 →
L 2000 8.225 LAC, LAEC, LARC, LAERC (LE220C)	07/2001 → 08/2002
L 2000 8.225 LAK, LAEK, LARK, LAERK (LE220C)	07/2001 → 08/2002
L 2000 8.225 LC,8.225 LLC, LRC, LLRC (LE220C)	07/2001 → 08/2002
L 2000 8.225 LK, LRK, L-KI, LR-KI (LE220C)	07/2001 → 08/2002
L 2000 8.225 LLS, LLRS (LE220C)	07/2001 → 08/2002
L 2000 9.145 LC,9.145 LLC, LRC, LLRC (LE140C)	07/2001 → 08/2002
L 2000 9.145 LK, LRK, L-KI, LR-KI (LE140C)	07/2001 → 08/2002
L 2000 9.145 LLS, LLRS (LE140C)	07/2001 → 08/2002
L 2000 9.185 LC,9.185 LLC, LRC, LLRC (LE180C)	09/2000 → 06/2005
L 2000 9.185 LK, LRK, L-KI, LR-KI (LE180C)	07/2001 → 06/2005
L 2000 9.185 LLS, LLRS (LE 180C)	07/2001 → 06/2005
L 2000 9.225 LC,9.225 LLC, LRC, LLRC (LE220C)	07/2001 → 06/2005
L 2000 9.225 LK, LRK, L-KI, LR-KI (LE220C)	07/2001 → 06/2005
L 2000 9.225 LLS, LLRS (LE220C)	07/2001 → 06/2005
LION S COACH RH 413	09/2002 → 09/2006
LION S COACH RH 463	09/2002 → 09/2006
LION S COACH RHC 414	09/2002 → 09/2006
LION S STAR RH 414	10/2001 → 09/2006
LION S STAR RH 464, RHS 464	10/2001 → 09/2006
LION S STAR RH 464, RHS 464	01/2002 → 09/2006
M 2000 L 12.225 LC, LLC, LLLC, LRC, LLRC	07/2001 → 06/2006
M 2000 L 12.255 LC, LLC, LLLC	09/2002 → 06/2006
M 2000 L 12.255 LK	10/2003 → 06/2006

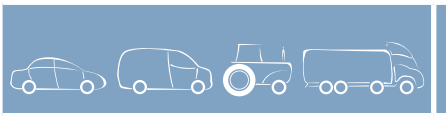



063535255010 MAN2026 100A 24V

MAN	
M 2000 L 12.285 LC, LLC, LLLC	09/2002 → 06/2006
M 2000 L 12.285 LK	10/2003 → 06/2006
M 2000 L 14.224, 14.225, LA-LF	07/2003 → 09/2006
M 2000 L 14.225 LAC, LARC, (LE220B)	07/2001 → 08/2002
M 2000 L 14.225 LAK, LARK, (LE220B)	07/2001 → 08/2002
M 2000 L 14.225 LC, LLC, LLLC, LRC, LLRC, LLLRC, (LE220B)	07/2001 → 08/2002
M 2000 L 14.225 LK, LRK (LE220B)	09/2002 → 06/2006
M 2000 L 14.255 LAC, LARC	11/2002 → 09/2006
M 2000 L 14.255 LAK, LARK	11/2002 → 09/2006
M 2000 L 14.255 LA-LF	07/2003 → 09/2006
M 2000 L 14.255 LC, LLC, LLLC, LRC, LLRC, LLLRC, (LE250B)	07/2001 → 08/2002
M 2000 L 14.255 LK, LRK	11/2002 → 09/2006
M 2000 L 14.284 LC, LLC, LLLC, LRC, LLRC, LLLRC	10/1998 → 09/2001
M 2000 L 14.284, 14.285, LAC, LARC	06/1998 → 09/2001
M 2000 L 14.284, 14.285, LAK, LARK	06/1998 → 09/2001
M 2000 L 14.284, 14.285, LA-LF	06/1998 → 09/2001
M 2000 L 14.284, 14.285, LK, LRK	10/1998 → 09/2001
M 2000 L 15.225 LC, LLC, LLLC, LRC, LLRC, LLLRC, (LE220B)	09/2002 → 09/2006
M 2000 L 15.225 LK, LRK, (LE220B)	09/2002 → 09/2006
M 2000 L 15.255 LC, LLC, LLLC, LRC, LLRC, LLLRC, (LE250B)	07/2001 → 08/2002
M 2000 L 15.255 LK, LRK, (LE250B)	07/2001 → 08/2002
M 2000 L 15.284 LC, LLC, LLLC, LRC, LLRC, LLLRC	06/1998 → 09/2001
M 2000 L 15.284 LK, LRK	06/1998 → 09/2001
M 2000 L 15.285 LC, LLC, LLLC, LRC, LLRC, LLLRC, (LE280B)	09/2000 → 09/2001
M 2000 L 15.285 LK, LRK, (LE280B)	09/2000 → 09/2001
M 2000 L 18.224, 18.225, L-KO, LR-KO	07/2001 → 09/2006
M 2000 L 18.255 LAC, LARC	07/2001 → 09/2006
M 2000 L 18.255 LAK, LARK	07/2001 → 09/2006
M 2000 L 18.255 LC, LLC, LLLC, LRC, LLRC, LLLRC, (LE250B)	09/2000 → 09/2002
M 2000 L 18.255 LK, LLK, LRK, LLRK	11/2002 → 09/2006
M 2000 L 18.255 L-KO, LR-KO	07/2001 → 09/2006
M 2000 L 18.284 LAC, LARC	06/1998 → 09/2001
M 2000 L 18.284 LAK, LARK	06/1998 → 09/2001
M 2000 L 18.284 LC, LLC, LLLC, LRC, LLRC, LLLRC	06/1998 → 09/2001




063535255010 MAN2026 100A 24V

MAN	
M 2000 L 18.284, 18.285, LK, LLK, LRK, LLRK	06/1998 → 09/2001
M 2000 L 18.284, 18.285, L-KO, LR-KO	06/1998 → 09/2001
M 2000 L 18.285 LAC, LARC (LE280B)	07/2001 → 09/2006
M 2000 L 18.285 LAK, LARK, (LE280B)	07/2001 → 09/2006
M 2000 L 18.285 LC, LLC, LLLC, LRC, LLRC, LLLRC, (LE280B)	09/1999 → 09/2001
M 2000 L 20.224 LNLC, LNLLC	07/2001 → 09/2006
M 2000 L 20.255 LNLC, LNLLC	07/2001 → 09/2006
M 2000 L 20.284, 20.285, LNLC, LNLLC	05/2001 → 09/2006
M 2000 L 26.284 DL-TM, DLR-TM	05/2001 → 12/2002
M 2000 L 26.284, 26.285, DL-HK, DLR-HK	11/2002 → 12/2002
M 2000 M 12.224 MLS	02/2003 → 07/2005
M 2000 M 12.255 MLS	02/2003 → 07/2005
M 2000 M 12.284 MLS	09/2002 → 07/2005
M 2000 M 14.225 MC, MLC, MLLC	10/2000 → 07/2005
M 2000 M 14.225 MLS, MLRS	02/2003 → 07/2005
M 2000 M 14.255 MAK	11/2002 → 07/2005
M 2000 M 14.255 MC, MLC, MLLC	09/2002 → 07/2005
M 2000 M 14.255 MLS, MLRS	01/2001 → 09/2006
M 2000 M 14.284 MAK	06/1998 → 09/2001
M 2000 M 14.284 MA-KO, MA-LF	06/1998 → 09/2001
M 2000 M 14.284 MC, MLC, MLLC	06/1998 → 09/2001
M 2000 M 14.284 MLS, MLRS	06/1998 → 09/2001
M 2000 M 14.285 MLC, MLLC (ME280C)	07/2001 → 08/2002
M 2000 M 18.225 MAC, MARC	02/2003 → 07/2005
M 2000 M 18.225 MC, MLC, MLLC, MRC, MLRC, MLLRC	10/2000 → 07/2005
M 2000 M 18.255 MAK, MARK	07/2001 → 07/2005
M 2000 M 18.255 MK, MLK, MRK, MLRK	11/2002 → 07/2005
M 2000 M 18.255 MLS, MLRS	01/2001 → 09/2006
M 2000 M 18.284 MAC, MARC	06/1998 → 09/2001
M 2000 M 18.284 MAK, MARK	06/1998 → 09/2001
M 2000 M 18.284 MC, MLC, MLLC, MRC, MLRC, LLRC	06/1998 → 09/2001
M 2000 M 18.284 MK,18.284 MLK, MRK, MLRK	06/1998 → 09/2001
M 2000 M 18.284 MLS, MLRS	06/1998 → 09/2001
M 2000 M 25.285 MNLC, MNLLC, MNLRC, MNLLRC, MVLC	02/2003 → 07/2005
NG NG 262, NG 263	07/1998 → 12/2001
NG NG 312, NG 313	07/1998 → 12/2001
NL NL 202, NL 222, NL 223	07/1998 → 09/2001
NL NL 243	09/2002 → 09/2006




063535255010 MAN2026 100A 24V

MAN	
NL NL 262, NL 263	07/1998 →
NL NL 313	11/1999 → 12/2001
NU NU 263	09/1996 → 07/1998
NU NU 263	07/1998 → 09/2001
NU NU 313	07/1998 → 09/2001
NU NU 313 15M	07/1998 → 12/2001
TGA 32.310	06/2002 → 05/2004
TGA 18.310 FAC, FARC	09/2002 → 12/2005
TGA 18.310 FAK, FAK-L, FALK	09/2002 → 12/2005
TGA 18.310 FAS, FARS	09/2002 → 12/2005
TGA 18.310 FC, FLC, FRC, FLLC, FLLC/N, FLLW, FLLRC, FLLRW	04/2000 → 03/2004
TGA 18.310 FK, FLK, FK-L, FLRK	12/2000 → 06/2004
TGA 18.310 FLS, FLLS, FLLS/N, FLS-TS, FLRS, FLLRS	04/2000 → 03/2004
TGA 18.360 FAC, FARC	09/2002 → 12/2005
TGA 18.360 FAK, FALK, FAK-L, FALK-L	09/2002 → 12/2005
TGA 18.360 FAS, FALS, FARS	09/2002 → 12/2005
TGA 18.360 FC, FLC, FRC, FLLC, FLLC/N, FLLW, FLLRW	04/2000 → 03/2004
TGA 18.360 FK, FLK, FK-L, FLRK	12/2000 → 03/2004
TGA 18.360 FLS, FLLS, FLLS/N, FLS-TS, FLRS, FLLRS	09/2001 → 09/2003
TGA 18.410 FAC, FARC	09/2002 → 12/2005
TGA 18.410 FAK, FAK-L, FALK	09/2002 → 12/2005
TGA 18.410 FAS, FALS, FARS	09/2002 → 12/2005
TGA 18.410 FC, FRC, FLC, FLRC, FLLC, FLLC/N, FLLW, FLLRC	04/2000 → 03/2004
TGA 18.410 FK, FK-L, FLK, FLRK	12/2000 → 03/2004
TGA 18.410 FLS, FLLS, FLLS/N, FLS-TS, FLRS, FLLRS	04/2000 → 03/2004
TGA 18.460 FC, FLC, FRC, FLLC, FLLC/N, FLLW, FLLRC, FLLRW	04/2000 → 05/2004
TGA 18.460 FK, FK-L, FLK, FLRK	12/2000 → 05/2004
TGA 18.460 FLS, FLLS, FLLS/N, FLS-TS, FLRS, FLLRS	04/2000 → 05/2004
TGA 18.480 FAC, FARC	07/2003 → 09/2006
TGA 18.480 FC, FLC, FLLC, FLLW, FLLRW, FLLRC	07/2003 → 09/2006
TGA 18.480 FK, 18.480 FLK	07/2003 → 09/2006
TGA 18.480 FLS, FLLS, FLLS/N, FLS-TS, FLRS-WW	07/2003 → 09/2006

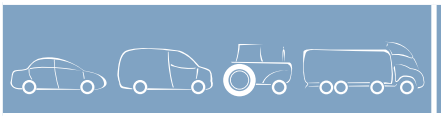


063535255010 MAN2026 100A 24V

MAN	
TGA 18.510 FC, FLC, FRC, FLLC, FLLC/N, FLLW, FLLRC, FLLRW	09/2000 → 06/2003
TGA 18.510 FLS, FLLS, FLLS/N, FLRS, FLLRS	04/2000 → 06/2003
TGA 18.530 FAC	04/2004 → 09/2004
TGA 18.530 FAK, FALK	04/2004 → 09/2004
TGA 18.530 FAS, FALS	04/2004 → 09/2004
TGA 18.530 FC, FLC, FLLC, FLLC/N, FLLW, FLLRC, FLLRW	11/2002 → 09/2004
TGA 18.530 FLS	10/2002 → 09/2006
TGA 24.360 FNLLC/N, FNLLW, FNLLRW, FNLLRC	11/2002 → 05/2004
TGA 24.410 FNLLC/N, FNLLW, FNLLRW	11/2002 → 05/2004
TGA 24.460 FNLLC/N, FNLLW, FNLLRC, FNLLRW	11/2002 → 05/2004
TGA 24.510 FNLLC/N, FNLLW, FNLLRW	11/2002 → 06/2003
TGA 26.310 FDAC, FDARC	02/2002 → 06/2004
TGA 26.310 FDAK	02/2002 → 06/2004
TGA 26.310 FDAS, FDARS	02/2002 → 06/2004
TGA 26.310 FDC, FDLC, FDRC, FDLC/M, FDLRC	01/2001 → 06/2004
TGA 26.310 FDK, FDLK, FDRK	09/2002 → 06/2004
TGA 26.310 FDS, FDLS, FDLS/M, FDLRS	01/2001 → 06/2004
TGA 26.310 FD-TM, FDR-TM	10/2000 → 06/2004
TGA 26.310 FNLC, FNLLC, FVLC, FNLLW, FNLRC, FNLLRW	09/2000 → 06/2004
TGA 26.310 FPLS, FVLS, FNLS, FNLLS, FPLRS, FNLRS, FVLRS	12/2000 → 06/2004
TGA 26.310 FVL-KO	12/2000 → 06/2004
TGA 26.310, 26.320 FVL-KO	02/2004 → 06/2004
TGA 26.360 FDAC, FDARC	09/2002 → 06/2004
TGA 26.360 FDAK, FDALK	02/2002 →
TGA 26.360 FDAS, FDARS	09/2002 → 06/2004
TGA 26.360 FDC, FDLC, FDLC/M, FDRC, FDLRC-WW	01/2001 →
TGA 26.360 FDK, FDLK, FDRK, FDLRK	09/2002 → 12/2005
TGA 26.360 FDLS, FDLS/M, FDLRS, FDLRS/M, FDLRS-WW , FDRS	09/2003 → 12/2005
TGA 26.360 FDS, FDLS, FNLS, FNLLS, FPLS, FPLRS, FVLS, FVLRS	12/2000 →
TGA 26.360 FD-TM, FDR-TM	09/2002 → 12/2005
TGA 26.360 FNLC, FNLLC, FNLLW, FNLLRC, FNLLRW, FVLC	09/2000 →
TGA 26.360 FVL-KO	08/2002 → 10/2002

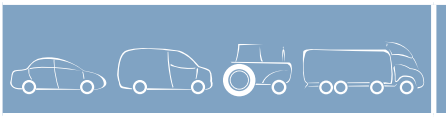


063535255010 MAN2026 100A 24V

MAN	
TGA 26.410 FDAC, FDARC	02/2002 → 06/2004
TGA 26.410 FDAK, FDALK	09/2002 → 12/2005
TGA 26.410 FDAS, FDALS, FDARS	09/2002 → 06/2004
TGA 26.410 FDC, FDLC, FDLC/M, FDLC-WW; FDRC-WW, FDLRC-WW	09/2002 → 12/2005
TGA 26.410 FDK, FDRK, FDLK, FDLRK	09/2002 → 12/2005
TGA 26.410 FDS, FDLS, FDLS/M, FDLS-WW, FDRS-WW, FDLRS-WW	09/2002 → 12/2005
TGA 26.410 FD-TM, FDR-TM	09/2002 → 12/2005
TGA 26.410 FNLC, FNLLC, FNLLW, FNLRC, FNLLRC, FVLC	04/2000 → 12/2005
TGA 26.410 FPLS, FPLRS, FVLS, FNLS, FNLLS	12/2000 → 12/2005
TGA 26.410 FVLC	09/2003 → 05/2004
TGA 26.410 FVL-KO	12/2000 → 12/2005
TGA 26.460 FDC, FDLC, FDLC/M, FDLC-WW, FDRC, FDLRC-WW	06/2001 → 06/2005
TGA 26.460 FDK, FDLK, FDLRK	01/2001 →
TGA 26.460 FDS, FDLS, FDLS/M, FDLS-WW, FDRS-WW, FDLRS-WW	06/2001 → 08/2002
TGA 26.460 FD-TM, FDR-TM	01/2001 → 08/2002
TGA 26.460 FNLC, FNLRC, FNLLC, FNLLRW, FNLLRC	08/2002 → 10/2002
TGA 26.460 FPLS, FPLRS, FVLS, FVLRS, FNLS, FNLLS, FNLRS	12/2000 → 05/2004
TGA 26.460 FVLC	09/2002 → 06/2005
TGA 26.460 FVL-KO	12/2000 → 05/2004
TGA 26.480 FDAC, FDALC, FDARC	09/2002 →
TGA 26.480 FDAS, FDALS, FDARS	09/2002 →
TGA 26.510 FDC, FDC/M, FDRC, FDLC, FDLC/M, FDLRC	06/2001 → 06/2003
TGA 26.510 FDS, FDLS, FDLS/M, FDRS, FDLRS	06/2001 → 06/2003
TGA 26.510 FNLC, FNLLC, FNLLW, FNLLRC, FVLC	08/2002 → 10/2002
TGA 26.510 FNLS, FNLLS, FNLRS, FPLS, FVLS	12/2000 →
TGA 26.530 FNLC, FNLLC, FNLLW, FNLLRC, FVLC, FVLRC	09/2002 →
TGA 28.310 FNLC, FNLLC	09/2002 → 06/2005
TGA 28.310 FNLC, FNLLC, FNLRC	09/2002 → 06/2005
TGA 28.310 FNLS, FNLRS	09/2002 → 06/2005
TGA 28.360 FNLC, FNLLC	09/2002 → 06/2005





063535255010 MAN2026 100A 24V

MAN

TGA 28.360 FNLS, FNLRS	09/2002	→	06/2005
TGA 28.410 FNLC, FNLLC	09/2002	→	06/2005
TGA 28.410 FNLC, FNLLC, FNLRC	09/2002	→	06/2005
TGA 28.410 FNLS, FNLRS	09/2002	→	06/2005
TGA 28.460 FNLC, FNLLC, FNLRC	09/2002	→	05/2004
TGA 28.460 FNLS, FNLRS	09/2002	→	05/2004
TGA 28.510 FNLC, FNLLC, FNLRC	09/2002	→	06/2003
TGA 28.510 FNLS, FNLRS	09/2002	→	06/2003
TGA 32.310 FFDC, FFDLC, FFDLRC	06/2002	→	05/2004
TGA 32.310 FFDK, FFDLK	06/2002	→	05/2004
TGA 32.360 FFDC, FFDLC, FFDLRC	09/2002	→	01/2006
TGA 32.360 FFDK, FFDLK	09/2002	→	01/2006
TGA 32.360 FFD-TM	09/2002	→	01/2006
TGA 32.410 FFDC, FFDLC, FFDRC, FFDLRC	09/2002	→	01/2006
TGA 32.410 FFDK, FFDLK	09/2002	→	01/2006
TGA 32.410 FFD-TM	09/2002	→	01/2006
TGA 32.460 FFDC, FFDLC, FFDLRC	09/2002	→	05/2004
TGA 32.460 FFDK, FFDLK	09/2002	→	05/2004
TGA 32.460 FFD-TM	09/2002	→	05/2004
TGA 33.360 FDAC, FDARC, FDAC-WW	09/2002	→	02/2008
TGA 33.360 FDAK, FDAK-WW	09/2002	→	02/2008
TGA 33.360 FDAS, FDAS-WW	09/2002	→	06/2004
TGA 33.360 FDC, FDC-WW, FDLC/M, FDRC-WW, FDLRC	09/2002	→	02/2008
TGA 33.360 FDK, FDK-WW, FDLK, FDRK-WW	06/2001	→	02/2008
TGA 33.360 FDS, FDS-WW, FDLS, FDLRS, FDRS-WW	09/2002	→	02/2008
TGA 33.360 FD-TM, FDR-TM	01/2001	→	06/2004
TGA 33.410 FDAC, FDAC-WW, FDALC	09/2002	→	06/2004
TGA 33.410 FDAK, FDAK-WW, FDALK	09/2002	→	12/2005
TGA 33.410 FDAS, FDAS-WW, FDALS	09/2002	→	06/2004
TGA 33.410 FDC, FDC-WW, FDLC, FDLRC, FDRC-WW	09/2002	→	12/2005
TGA 33.410 FDK, FDK-WW, FDLK, FDRK-WW	09/2002	→	12/2005
TGA 33.410 FDS, FDS-WW, FDLS, FDLS/M, FDLRS, FDRS-WW	09/2002	→	12/2005
TGA 33.410 FD-TM, FDR-TM	09/2002	→	12/2005
TGA 33.460 FDAC-WW	01/2006	→	06/2007
TGA 33.460 FDAK-WW	01/2006	→	06/2007
TGA 33.460 FDAS-WW	01/2006	→	06/2007





063535255010 MAN2026 100A 24V

MAN

TGA 33.460 FDC, FDC-WW, FDLC, FDLRC, FDRC-WW	09/2002	→	06/2007
TGA 33.460 FDK, FDK-WW, FDLK, FDRK-WW	09/2002	→	12/2005
TGA 33.460 FDS, FDLS, FDLS/M, FDLRS, FDRS-WW	09/2002	→	12/2005
TGA 33.460 FD-TM, FDR-TM	09/2002	→	03/2007
TGA 33.510 FDC, FDC/M, FDLC, FDRC, FDLRC	09/2002	→	06/2003
TGA 33.510 FDS, FDLS/M, FDRS, FDLRS/M	09/2002	→	06/2003
TGA 35.310 FFDC, FFDLC	06/2003	→	06/2005
TGA 35.310 FFDK, FFDLK	06/2003	→	06/2005
TGA 35.310 FFD-TM	11/2003	→	06/2005
TGA 35.360 FFDC, FFDLC	06/2003	→	09/2006
TGA 35.360 FFDK, FFDLK	06/2003	→	09/2006
TGA 35.360 FFD-TM	11/2003	→	09/2006
TGA 35.360 FFNLC	07/2006	→	09/2006
TGA 35.410 FFDC, FFDLC	10/2003	→	12/2005
TGA 35.410 FFDK, FFDLK	10/2003	→	12/2005
TGA 35.410 FFD-TM	11/2003	→	12/2005
TGA 35.460 FFDC, FFDLC	10/2003	→	06/2005
TGA 35.460 FFDK, FFDLK	10/2003	→	06/2005
TGA 35.460 FFD-TM	11/2003	→	06/2005
TGA 37.360 FFDC	12/2004	→	12/2005
TGA 37.360 FFDK	12/2004	→	12/2005
TGA 37.360 FFD-TM	12/2004	→	12/2005
TGA 37.410 FFDC	12/2004	→	12/2005
TGA 37.410 FFDK	12/2004	→	12/2005
TGA 37.410 FFD-TM	12/2004	→	12/2005
TGA 37.460 FFDC	12/2004	→	06/2005
TGA 37.460 FFDK	12/2004	→	06/2005
TGA 37.460 FFD-TM	12/2004	→	06/2005
TGA 40.410 FDAK-WW	06/2004	→	12/2005
TGA 40.410 FDAS-WW	06/2004	→	12/2005
TGA 40.410 FDK-WW	06/2004	→	12/2005
TGA 40.410 FDS-WW	06/2004	→	12/2005
TGA 40.460 FDAK-WW	04/2004	→	05/2010
TGA 40.460 FDAS-WW	04/2004	→	05/2010
TGA 41.360 FFDC, FFDC/M, FFDC/M-WW, FFDRC	01/2003	→	12/2005
TGA 41.360 FFD-TM	12/2004	→	12/2005
TGA 41.410 FFDC-WW, FDRC	09/2003	→	12/2005
TGA 41.410 FFDK-WW	09/2003	→	12/2005
TGA 41.410 FFD-TM	12/2004	→	12/2005
TGA 41.460 FFDC-WW, FFDRC	09/2003	→	05/2010
TGA 41.460 FFDK-WW	09/2003	→	05/2010
TGA 41.460 FFD-TM	12/2004	→	06/2005

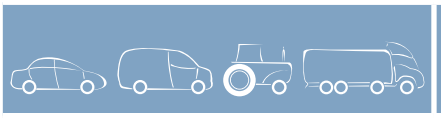


063535255010 MAN2026 100A 24V	
NEOPLAN	
Tourliner N 2216 SHD	11/2003 →
Tourliner N 2216 SHD	06/2006 →
Tourliner N 2216 SHD,SHDL	11/2003 →
Tourliner N 2216 SHDL	06/2006 →
063535550050 MAN2003 70A 24V	
IVECO	
EuroCargo 100 E 17 K tector, 100 E 17 DK tector	09/2000 → 08/2003
EuroCargo 100 E 17, 100 E 17 DP tector, 100 E 18 tector	09/2000 → 08/2003
EuroCargo 100 E 18 K tector	09/2006 →
EuroCargo 100 E 18 K tector, 100 E 18 DK tector	09/2000 → 08/2003
EuroCargo 100 E 18 tector	09/2000 → 08/2003
EuroCargo 100 E 18 tector, 100 E 18 P tector, 100 E 18 FP tector	09/2006 →
EuroCargo 100 E 18 W tector, 100 E 18 WS tector	09/2000 → 08/2003
EuroCargo 100 E 21 K tector, 100 E 21 DK tector	09/2000 → 08/2003
EuroCargo 100 E 21 W tector, 100 E 21 WS tector	09/2000 → 08/2003
EuroCargo 100 E 21, 100 E 21 DP tector, 100 E 22 tector	09/2000 → 08/2003
EuroCargo 100 E 22 K tector	09/2006 →
EuroCargo 100 E 22 W tector, 100 E 22 WS tector	09/2006 →
EuroCargo 110 E 22 tector, 110 E 22 P tector, 110 EL 22 P tector	09/2007 →
EuroCargo 110 E 22 W tector	09/2007 →
EuroCargo 110 E 22 WS tector	09/2007 →
EuroCargo 110 E 25 W tector	09/2007 →
EuroCargo 110 E 25 WS tector	09/2007 →
EuroCargo 120 E 18 K tector	09/2006 →
EuroCargo 120 E 18 K tector, 120 E 18 DK tector	09/2000 → 09/2005
EuroCargo 120 E 18 tector, 120 E 18 D tector, 120 E 18 DP tector	09/2000 → 09/2005
EuroCargo 120 E 21 K tector	09/2003 → 08/2005
EuroCargo 120 E 21 tector, 120 E 21 P tector, 120 E 21 FP tector	09/2003 → 08/2005

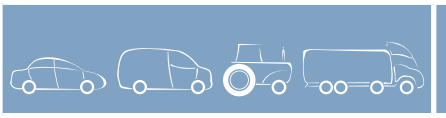


063535550050 MAN2003 70A 24V	
IVECO	
EuroCargo 120 E 22 D tector, 120 E 22 P tector, 120 E 22 FP tector	09/2006 →
EuroCargo 120 E 22 K tector	09/2006 →
EuroCargo 120 E 24 K tector, 120 E 24 DK tector	09/2000 → 08/2005
EuroCargo 120 E 24, 120 E 24 DP tector, 120 E 25 tector	09/2000 → 09/2005
EuroCargo 120 E 25 K tector	09/2006 →
EuroCargo 120 E 28 tector	09/2000 → 09/2005
EuroCargo 120 E28 K tector	09/2000 → 09/2005
EuroCargo 120 EL 17, 120 EL 17 P tector, 120 E 18, 120 EL 18 tector	09/2000 → 09/2005
EuroCargo 120 EL 21, 120 EL 21 P tector, 120 E 22, 120 EL 22 tector	09/2000 →
EuroCargo 130 E 18 D tector, 130 E 18 DP tector	09/2006 →
EuroCargo 130 E 18 K tector, 130 E 18 DK tector	09/2000 → 09/2005
EuroCargo 130 E 18 tector, 130 E 18 D tector, 130 E 18 DP tector	09/2000 → 09/2005
EuroCargo 130 E 21 K tector	09/2003 → 08/2005
EuroCargo 130 E 21 tector, 130 E21 P tector, 130 E 21 FP tector	09/2003 → 08/2005
EuroCargo 130 E 24 K tector, 130 E 24 DK tector	09/2000 → 09/2005
EuroCargo 130 E 24 tector, 130 E 24 D tector, 130 E 24 DP tector	09/2000 → 09/2005
EuroCargo 130 E 25 D tector, 130 E 25 DP tector	09/2006 →
EuroCargo 130 E 25 DK tector	09/2006 →
EuroCargo 130 E 28 K tector	09/2000 → 09/2005
EuroCargo 130 E 28 tector	09/2000 → 09/2005
EuroCargo 140 E 18 K	05/2005 → 08/2005
EuroCargo 140 E 18 K tector, 140 E 18 DK tector	09/2006 →
EuroCargo 140 E 18 tector, 140 E 18 P tector, 140 E 18 D FP tector	09/2006 →
EuroCargo 140 E 18 W tector	09/2000 → 09/2005
EuroCargo 140 E 18, 140 E 18 P, 140 E 18 FP	05/2005 → 08/2005
EuroCargo 140 E 21 K	05/2005 → 08/2005
EuroCargo 140 E 21 tector, 140 E 21 P, 140 E 21 FP	03/2005 → 08/2005
EuroCargo 140 E 22 K tector	09/2006 →




063535550050 MAN2003 70A 24V

IVECO

EuroCargo 140 E 22 tector, 140 E 22 P tector, 140 E 22 D FP tector	09/2006	→	
EuroCargo 140 E 24 K tector	09/2003	→	08/2005
EuroCargo 140 E 24 tector, 14 E 24 P tector, 140 E 24 FP tector	09/2003	→	08/2005
EuroCargo 140 E 24 W tector, 140 E 24 WS tector	09/2000	→	08/2003
EuroCargo 140 E 25 K tector, 140 E 25 DK tector	09/2006	→	
EuroCargo 140 E 25 W tector, 140 E 25 WS tector	09/2006	→	
EuroCargo 140 E 28 K tector	09/2006	→	
EuroCargo 140 E 28 tector, 140 E 28 P tector, 140 E 28 FP tector	09/2006	→	
EuroCargo 140 E 28 W tector, 140 E 28 WS tector	09/2006	→	
EuroCargo 140 E D 25 tector, 140 E 25 P tector, 140 E 25 FP tector	09/2006	→	
EuroCargo 150 E 18 K tector	09/2000	→	08/2003
EuroCargo 150 E 18 K tector	09/2006	→	
EuroCargo 150 E 18 tector	09/2000	→	08/2003
EuroCargo 150 E 18 tector, 150 E 18 P tector, 150 E 18 FP tector	09/2006	→	
EuroCargo 150 E 21 K tector	09/2003	→	08/2005
EuroCargo 150 E 21 tector, 150 E 21 P tector, 150 E 21 FP tector	09/2003	→	08/2005
EuroCargo 150 E 22 K tector	09/2006	→	
EuroCargo 150 E 22 tector, 150 E 22 P tector, 150 E 22 FP tector	09/2006	→	
EuroCargo 150 E 24 K tector	09/2000	→	08/2005
EuroCargo 150 E 24 tector, 150 E 25 tector	09/2000	→	08/2005
EuroCargo 150 E 25 K tector	09/2006	→	
EuroCargo 150 E 25 W tector	09/2006	→	
EuroCargo 150 E 25 WS tector	09/2006	→	
EuroCargo 150 E 28 K tector	09/2000	→	08/2005
EuroCargo 150 E 28 tector	09/2000	→	08/2005
EuroCargo 150 E 28 W tector	09/2006	→	
EuroCargo 150 E 28 WS tector	09/2006	→	
EuroCargo 150 E 30 K tector	09/2006	→	
EuroCargo 150 E 30 tector, 150 E 30 P tector, 150 E 30 FP tector	09/2006	→	
EuroCargo 160 E 18 K tector	09/2006	→	
EuroCargo 160 E 18 tector, 160 E 18 P tector	09/2006	→	
EuroCargo 160 E 21 tector, 160 E 21 P tector	09/2003	→	08/2005




063535550050 MAN2003 70A 24V

IVECO

EuroCargo 160 E 22 K tector	09/2006	→	
EuroCargo 160 E 22 tector, 160 E 22 P tector	09/2006	→	
EuroCargo 160 E 24 tector, 160 E 24 P tector	09/2003	→	08/2005
EuroCargo 160 E 25 K tector	09/2006	→	
EuroCargo 160 E 25 tector, 160 E 25 P tector	09/2006	→	
EuroCargo 160 E 28 K tector	09/2006	→	
EuroCargo 160 E 28 tector, 160 E 28 P tector	09/2003	→	
EuroCargo 160 E 30 K tector	09/2006	→	
EuroCargo 160 E 30 tector, 160 E 30 P tector	09/2006	→	
EuroCargo 180 E 21 K tector	09/2000	→	08/2005
EuroCargo 180 E 21 tector	09/2000	→	08/2005
EuroCargo 180 E 22 tector, 160 E 22 P tector	09/2006	→	
EuroCargo 180 E 24 K tector	09/2000	→	08/2005
EuroCargo 180 E 24, 180 E 25 tector	09/2000	→	08/2005
EuroCargo 180 E 25 K tector	09/2006	→	
EuroCargo 180 E 28 K tector	09/2000	→	08/2005
EuroCargo 180 E 28 tector, 180 E 28 P tector	09/2000	→	08/2005
EuroCargo 180 E 30 K tector	09/2006	→	
EuroCargo 180 E 30 tector, 180 E 30 P tector	08/2006	→	
EuroCargo 320 E 28 T tector	09/2000	→	08/2003
EuroCargo 320 E 28 tector	09/2000	→	08/2003
EuroCargo 60 E 14 K tector	05/2009	→	
EuroCargo 60 E 14 tector, 60 E 14 P tector	05/2009	→	
EuroCargo 60 E 16 K tector	05/2009	→	
EuroCargo 60 E 16 tector, 60 E 16 P tector	05/2009	→	
EuroCargo 65 E 13 K tector	09/2000	→	08/2005
EuroCargo 65 E 14 K tector	05/2010	→	
EuroCargo 65 E 14 tector, 65 E 14 P tector	05/2010	→	
EuroCargo 65 E 15 tector, 65 E 15 P tector	09/2000	→	08/2003
EuroCargo 65 E 16 K tector	05/2010	→	
EuroCargo 65 E 16 tector, 65 E 16 P tector	05/2010	→	
EuroCargo 65 E15	09/2000	→	08/2003
EuroCargo 75 E 13 K tector	09/2003	→	08/2005
EuroCargo 75 E 13 tector, 75 E 13 P tector	09/2000	→	08/2003
EuroCargo 75 E 14 K tector	09/2006	→	
EuroCargo 75 E 14 tector, 75 E 14 P tector	09/2006	→	
EuroCargo 75 E 15 K tector	09/2000	→	08/2003
EuroCargo 75 E 15 tector, 75 E 15 P tector	09/2000	→	08/2003
EuroCargo 75 E 16 K tector	09/2006	→	
EuroCargo 75 E 16 tector, 75 E 16 P tector	09/2006	→	
EuroCargo 75 E 17 K, 75 E 18 K tector	09/2000	→	08/2003
EuroCargo 75 E 17, 75 E 17 P, 75 E 18 tector	09/2000	→	08/2003
EuroCargo 75 E 18 K tector	09/2000	→	08/2003
EuroCargo 75 E 18 tector, 75 E 18 P tector	09/2000	→	08/2003




063535550050 MAN2003 70A 24V

IVECO

EuroCargo 80 E 17 K, 80 E 17 DK tector, 80 E 18 K tector	09/2000 → 08/2003
EuroCargo 80 E 17, 80 E 17 D tector, 80 E 17 DP tector, 80 E 18 tector	09/2000 → 08/2003
EuroCargo 80 E 18 K tector	09/2006 →
EuroCargo 80 E 18 K tector, 80 E 18 DK tector	09/2000 → 08/2003
EuroCargo 80 E 18 tector, 80 E 18 D tector, 80 E 18 DP tector	09/2000 → 08/2003
EuroCargo 80 E 18 tector, 80 E 18 P tector, 80 E 18 FP tector	09/2006 →
EuroCargo 80 E 21 K, 80 E 21 DK tector, 80 E 22 K tector	09/2000 → 08/2003
EuroCargo 80 E 21, 80 E 21 D tector, 80 E 21 DP tector, 80 E 22 tector	09/2000 → 08/2003
EuroCargo 80 EL 15 tector	09/2000 → 08/2003
EuroCargo 80 EL 16 tector, 80 EL 16 P tector	09/2006 →
EuroCargo 80 EL 17 tector, 80 EL 17 P tector	09/2003 → 08/2005
EuroCargo 80 EL 18 tector, 80 EL 18 P tector	09/2006 →
EuroCargo 90 E 17 K tector, 90 E 17 DK tector	09/2000 → 08/2003
EuroCargo 90 E 17, 90 E 17D tector, 90 E 17 DP tector, 90 E 18 tector	09/2000 → 08/2003
EuroCargo 90 E 18 K tector, 90 E 18 DK tector	09/2000 → 09/2005
EuroCargo 90 E 18 tector, 90 E 18 D tector, 90 E 18 DP tector	09/2000 → 09/2005
EuroCargo 90 E 21 K tector, 90 E 21 DK tector	09/2000 → 09/2005
EuroCargo 90 E 21, 90 E 21 D tector, 90 E 21 DP tector, 90 E 22 tector	09/2000 → 09/2005
EuroCargo 90 E 22 K tector	09/2006 →
EuroCargo tector 65 E 13	09/2000 → 08/2003

063536250020 MAN2044 200A 12V

MERCEDES-BENZ

CLASSE E (W211) E 200 CDI (211.004)	07/2002 → 09/2008
CLASSE E (W211) E 220 CDI (211.006)	03/2002 → 01/2009
CLASSE E (W211) E 270 CDI (211.016)	03/2002 → 03/2005
CLASSE E T-Model (S211) E 220 CDI (211.206)	03/2003 → 08/2009
CLASSE E T-Model (S211) E 220 T CDI (211.206)	03/2003 → 03/2006
CLASSE E T-Model (S211) E 270 T CDI (211.216)	03/2003 → 03/2005

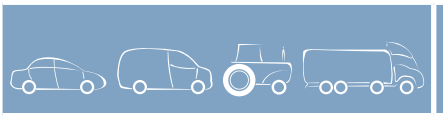


063536550050 MAN2045 90A 24V

IVECO

EuroCargo 100 E 17 K tector, 100 E 17 DK tector	09/2000 → 08/2003
EuroCargo 100 E 17, 100 E 17 DP tector, 100 E 18 tector	09/2000 → 08/2003
EuroCargo 100 E 18 K tector	09/2006 →
EuroCargo 100 E 18 K tector, 100 E 18 DK tector	09/2000 → 08/2003
EuroCargo 100 E 18 tector	09/2000 → 08/2003
EuroCargo 100 E 18 tector, 100 E 18 P tector, 100 E 18 FP tector	09/2006 →
EuroCargo 100 E 18 W tector, 100 E 18 WS tector	09/2000 →
EuroCargo 100 E 21 K tector, 100 E 21 DK tector	09/2000 → 08/2003
EuroCargo 100 E 21 W tector, 100 E 21 WS tector	09/2000 → 08/2003
EuroCargo 100 E 21, 100 E 21 DP tector, 100 E 22 tector	09/2000 →
EuroCargo 100 E 22 K tector	09/2006 →
EuroCargo 100 E 22 W tector, 100 E 22 WS tector	09/2006 →
EuroCargo 110 E 22 tector, 110 E 22 P tector, 110 EL 22 P tector	09/2007 →
EuroCargo 110 E 22 W tector	09/2007 →
EuroCargo 110 E 22 WS tector	09/2007 →
EuroCargo 110 E 25 W tector	09/2007 →
EuroCargo 110 E 25 WS tector	09/2007 →
EuroCargo 120 E 18 K tector	09/2006 →
EuroCargo 120 E 18 K tector, 120 E 18 DK tector	09/2000 → 08/2005
EuroCargo 120 E 18 tector, 120 E 18 D tector, 120 E 18 DP tector	09/2000 → 08/2005
EuroCargo 120 E 21 K tector	09/2003 → 08/2005
EuroCargo 120 E 21 tector, 120 E 21 P tector, 120 E 21 FP tector	09/2003 → 08/2005
EuroCargo 120 E 22 D tector, 120 E 22 P tector, 120 E 22 FP tector	09/2006 →
EuroCargo 120 E 22 K tector	09/2006 →
EuroCargo 120 E 24 K tector, 120 E 24 DK tector	09/2000 → 08/2005
EuroCargo 120 E 24, 120 E 24 DP tector, 120 E 25 tector	09/2000 →




063536550050 MAN2045 90A 24V

IVECO

EuroCargo 120 E 25 K tector	09/2006 →
EuroCargo 120 E 28 tector	09/2000 →
EuroCargo 120 E28 K tector	09/2000 →
EuroCargo 120 EL 17, 120 EL 17 P tector, 120 E 18, 120 EL 18 tector	09/2000 →
EuroCargo 120 EL 21, 120 EL 21 P tector, 120 E 22, 120 EL 22 tector	09/2000 →
EuroCargo 130 E 18 D tector, 130 E 18 DP tector	09/2006 →
EuroCargo 130 E 18 K tector, 130 E 18 DK tector	09/2000 → 08/2005
EuroCargo 130 E 18 tector, 130 E 18 D tector, 130 E 18 DP tector	09/2000 → 08/2005
EuroCargo 130 E 21 K tector	09/2003 → 08/2005
EuroCargo 130 E 21 tector, 130 E21 P tector, 130 E 21 FP tector	09/2003 → 08/2005
EuroCargo 130 E 24 K tector, 130 E 24 DK tector	09/2000 → 08/2005
EuroCargo 130 E 24 tector, 130 E 24 D tector, 130 E 24 DP tector	09/2000 → 08/2005
EuroCargo 130 E 25 D tector, 130 E 25 DP tector	09/2006 →
EuroCargo 130 E 25 DK tector	09/2006 →
EuroCargo 130 E 28 K tector	09/2000 → 08/2005
EuroCargo 130 E 28 tector	09/2000 → 08/2005
EuroCargo 140 E 18 K	05/2005 → 08/2005
EuroCargo 140 E 18 K tector, 140 E 18 DK tector	09/2006 →
EuroCargo 140 E 18 tector, 140 E 18 P tector, 140 E 18 D FP tector	09/2006 →
EuroCargo 140 E 18 W tector	09/2000 → 08/2005
EuroCargo 140 E 18, 140 E 18 P, 140 E 18 FP	05/2005 → 08/2005
EuroCargo 140 E 21 K	05/2005 → 08/2005
EuroCargo 140 E 21 tector, 140 E 21 P, 140 E 21 FP	03/2005 → 08/2005
EuroCargo 140 E 22 K tector	09/2006 →
EuroCargo 140 E 22 tector, 140 E 22 P tector, 140 E 22 D FP tector	09/2006 →
EuroCargo 140 E 24 K tector	09/2003 → 08/2005
EuroCargo 140 E 24 tector, 14 E 24 P tector, 140 E 24 FP tector	09/2003 → 08/2005
EuroCargo 140 E 24 W tector, 140 E 24 WS tector	09/2000 → 08/2005




063536550050 MAN2045 90A 24V

IVECO

EuroCargo 140 E 25 K tector, 140 E 25 DK tector	09/2006 →
EuroCargo 140 E 25 W tector, 140 E 25 WS tector	09/2006 →
EuroCargo 140 E 28 K tector	09/2006 →
EuroCargo 140 E 28 tector, 140 E 28 P tector, 140 E 28 FP tector	09/2006 →
EuroCargo 140 E 28 W tector, 140 E 28 WS tector	09/2006 →
EuroCargo 140 E D 25 tector, 140 E 25 P tector, 140 E 25 FP tector	09/2006 →
EuroCargo 150 E 18 K tector	09/2000 → 08/2005
EuroCargo 150 E 18 K tector	09/2006 →
EuroCargo 150 E 18 tector	09/2000 → 08/2005
EuroCargo 150 E 18 tector, 150 E 18 P tector, 150 E 18 FP tector	09/2006 →
EuroCargo 150 E 21 K tector	09/2003 → 08/2005
EuroCargo 150 E 21 tector, 150 E 21 P tector, 150 E 21 FP tector	09/2003 → 08/2005
EuroCargo 150 E 22 K tector	09/2006 →
EuroCargo 150 E 22 tector, 150 E 22 P tector, 150 E 22 FP tector	09/2006 →
EuroCargo 150 E 24 K tector	09/2000 → 08/2005
EuroCargo 150 E 24 tector, 150 E 25 tector	09/2000 →
EuroCargo 150 E 25 K tector	09/2006 →
EuroCargo 150 E 25 W tector	09/2006 →
EuroCargo 150 E 25 WS tector	09/2006 →
EuroCargo 150 E 28 K tector	09/2000 →
EuroCargo 150 E 28 tector	09/2000 → 08/2005
EuroCargo 150 E 28 W tector	09/2006 →
EuroCargo 150 E 28 WS tector	09/2006 →
EuroCargo 150 E 30 K tector	09/2006 →
EuroCargo 150 E 30 tector, 150 E 30 P tector, 150 E 30 FP tector	09/2006 →
EuroCargo 160 E 18 K tector	09/2006 →
EuroCargo 160 E 18 tector, 160 E 18 P tector	09/2006 →
EuroCargo 160 E 21 tector, 160 E 21 P tector	09/2003 → 08/2005
EuroCargo 160 E 22 K tector	09/2006 →
EuroCargo 160 E 22 tector, 160 E 22 P tector	09/2006 →
EuroCargo 160 E 24 tector, 160 E 24 P tector	09/2003 → 08/2005
EuroCargo 160 E 25 K tector	09/2006 →
EuroCargo 160 E 25 tector, 160 E 25 P tector	09/2006 →
EuroCargo 160 E 28 K tector	09/2006 →
EuroCargo 160 E 28 tector, 160 E 28 P tector	09/2003 →




063536550050 MAN2045 90A 24V

IVECO	
EuroCargo 160 E 30 K tector	09/2006 →
EuroCargo 160 E 30 tector, 160 E 30 P tector	09/2006 →
EuroCargo 180 E 21 K tector	09/2000 → 08/2005
EuroCargo 180 E 21 tector	09/2000 → 08/2005
EuroCargo 180 E 22 tector, 160 E 22 P tector	09/2006 →
EuroCargo 180 E 24 K tector	09/2000 → 08/2005
EuroCargo 180 E 24, 180 E 25 tector	09/2000 →
EuroCargo 180 E 25 K tector	09/2006 →
EuroCargo 180 E 28 K tector	09/2000 →
EuroCargo 180 E 28 tector, 180 E 28 P tector	09/2000 →
EuroCargo 180 E 30 K tector	09/2006 →
EuroCargo 180 E 30 tector, 180 E 30 P tector	08/2006 →
EuroCargo 320 E 28 T tector	09/2000 → 08/2003
EuroCargo 320 E 28 tector	09/2000 → 08/2003
EuroCargo 60 E 14 K tector	05/2009 →
EuroCargo 60 E 14 tector, 60 E 14 P tector	05/2009 →
EuroCargo 60 E 16 K tector	05/2009 →
EuroCargo 60 E 16 tector, 60 E 16 P tector	05/2009 →
EuroCargo 65 E 13 K tector	09/2000 → 08/2005
EuroCargo 65 E 14 K tector	05/2010 →
EuroCargo 65 E 14 tector, 65 E 14 P tector	05/2010 →
EuroCargo 65 E 15 tector, 65 E 15 P tector	09/2000 → 08/2003
EuroCargo 65 E 16 K tector	05/2010 →
EuroCargo 65 E 16 tector, 65 E 16 P tector	05/2010 →
EuroCargo 65 E15	09/2000 → 08/2003
EuroCargo 75 E 13 K tector	09/2003 → 08/2005
EuroCargo 75 E 13 tector, 75 E 13 P tector	09/2000 → 08/2003
EuroCargo 75 E 14 K tector	09/2006 →
EuroCargo 75 E 14 tector, 75 E 14 P tector	09/2006 →
EuroCargo 75 E 15 K tector	09/2000 → 08/2003
EuroCargo 75 E 15 tector, 75 E 15 P tector	09/2000 → 08/2003
EuroCargo 75 E 16 K tector	09/2006 →
EuroCargo 75 E 16 tector, 75 E 16 P tector	09/2006 →
EuroCargo 75 E 17 K, 75 E 18 K tector	09/2000 → 08/2003
EuroCargo 75 E 17, 75 E 17 P, 75 E 18 tector	09/2000 → 08/2003
EuroCargo 75 E 18 K tector	09/2000 → 08/2005
EuroCargo 75 E 18 tector, 75 E 18 P tector	09/2000 → 08/2005
EuroCargo 80 E 17 K, 80 E 17 DK tector, 80 E 18 K tector	09/2000 → 08/2003
EuroCargo 80 E 17, 80 E 17 D tector, 80 E 17 DP tector, 80 E 18 tector	09/2000 → 08/2003
EuroCargo 80 E 18 K tector	09/2006 →
EuroCargo 80 E 18 K tector, 80 E 18 DK tector	09/2000 → 08/2003

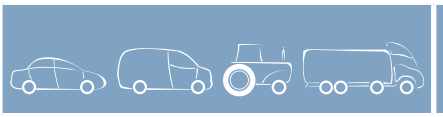


063536550050 MAN2045 90A 24V

IVECO	
EuroCargo 80 E 18 tector, 80 E 18 D tector, 80 E 18 DP tector	09/2000 → 08/2003
EuroCargo 80 E 18 tector, 80 E 18 P tector, 80 E 18 FP tector	09/2006 →
EuroCargo 80 E 21 K, 80 E 21 DK tector, 80 E 22 K tector	09/2000 →
EuroCargo 80 E 21, 80 E 21 D tector, 80 E 21 DP tector, 80 E 22 tector	09/2000 →
EuroCargo 80 EL 15 tector	09/2000 → 08/2003
EuroCargo 80 EL 16 tector, 80 EL 16 P tector	09/2006 →
EuroCargo 80 EL 17 tector, 80 EL 17 P tector	09/2003 → 08/2005
EuroCargo 80 EL 18 tector, 80 EL 18 P tector	09/2006 →
EuroCargo 90 E 17 K tector, 90 E 17 DK tector	09/2000 → 09/2005
EuroCargo 90 E 17, 90 E 17D tector, 90 E 17 DP tector, 90 E 18 tector	09/2000 → 09/2005
EuroCargo 90 E 18 K tector, 90 E 18 DK tector	09/2000 → 09/2005
EuroCargo 90 E 18 tector, 90 E 18 D tector, 90 E 18 DP tector	09/2000 → 09/2005
EuroCargo 90 E 21 K tector, 90 E 21 DK tector	09/2000 → 08/2003
EuroCargo 90 E 21, 90 E 21 D tector, 90 E 21 DP tector, 90 E 22 tector	09/2000 →
EuroCargo 90 E 22 K tector	09/2006 →
EuroCargo tector 65 E 13	09/2000 → 08/2003

063536550080 MAN2032 110A 24V

VOLVO	
8700	06/2001 →
9700	06/2001 →
9700	10/2001 →
9700	01/2005 →
9700	10/2007 →
9700	06/2001 →
9900	01/2005 →
9900	10/2007 →
B 12	06/2001 →
B 12	02/2006 →
FH 12 FH 12/340	12/2001 → 08/2006
FH 12 FH 12/380	12/2001 → 08/2006
FH 12 FH 12/420	12/2001 → 08/2006
FH 12 FH 12/460	12/2001 → 08/2006
FH 12 FH 12-500	09/2001 → 08/2006





063536895380 MAN2004 120A 24V	
IVECO	
EuroCargo 150 E 27, 150 E 27 R	01/1992 → 07/2000
EuroCargo 170 E 27,180 E 27	01/1994 → 07/2000
EuroCargo 260 E 27 KE	09/1991 → 07/2000
EuroCargo 320 E 27	10/1991 → 08/2000
EuroCargo 320 E 27 T	01/1992 → 08/2000
EuroTech MT MT 180 E 24	07/1992 → 12/1996
EuroTech MT MT 180 E 24 K	01/1993 → 12/1996
EuroTech MT MT 180 E 27	07/1992 → 12/1996
EuroTech MT MT 180 E 27 K	07/1992 → 12/1996
EuroTech MT MT 190 E 24	01/1997 → 08/1998
EuroTech MT MT 190 E 24 K	01/1997 → 08/1998
063536895380 MAN2004 120A 24V	
IVECO	
EuroTech MT MT 190 E 27	01/1997 → 08/1998
EuroTech MT MT 190 E 27 K	01/1997 → 08/1998

Disegni
Drawings
Zeichnungen
Schémas
Diseños
Desenhos
Σχεδιαγράμματα
Rysunki techniczne
Рисунки
Resimler

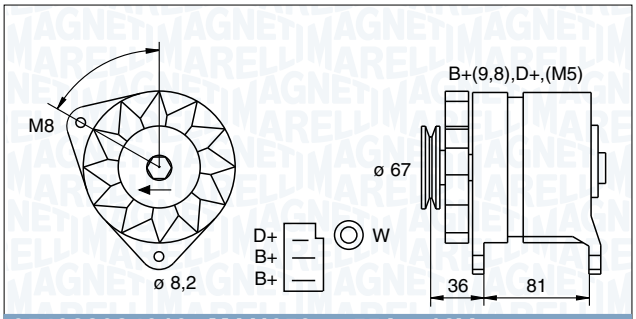

054022384010 MAN653 55A 12V

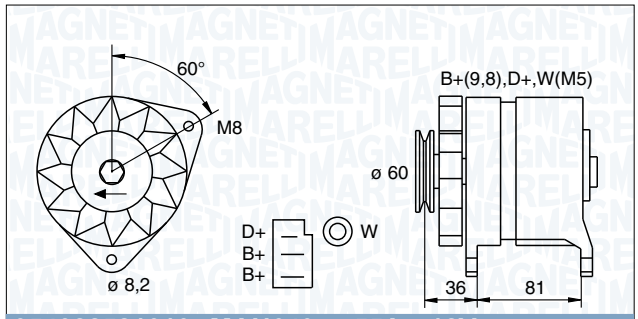

054022581010 MAN649 55A 12V

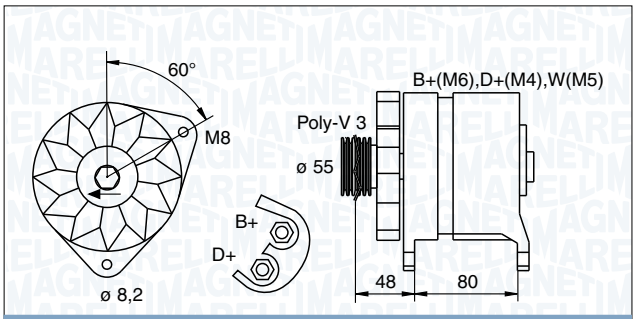

054022585010 MAN652 70A 12V

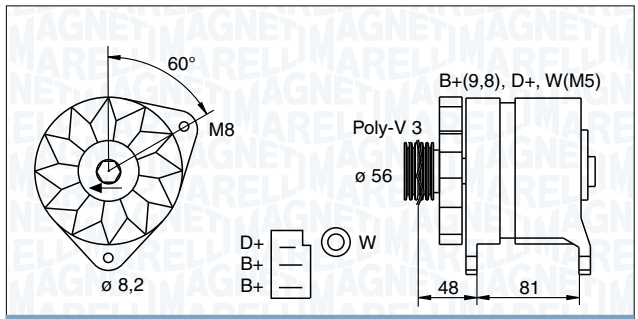

054022598010 MAN666 55A 12V

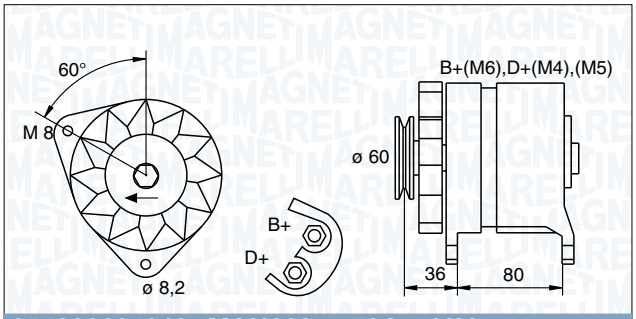

054022604010 MAN662 70A 12V

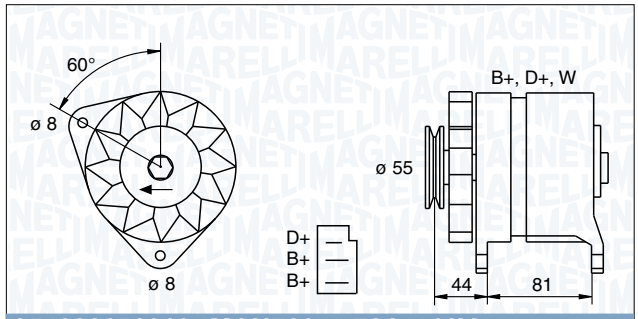

054022656010 MAN766 72A 12V

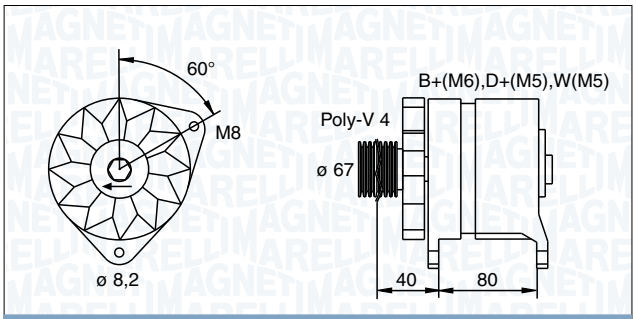

054022708010 MAN1018 70A 12V

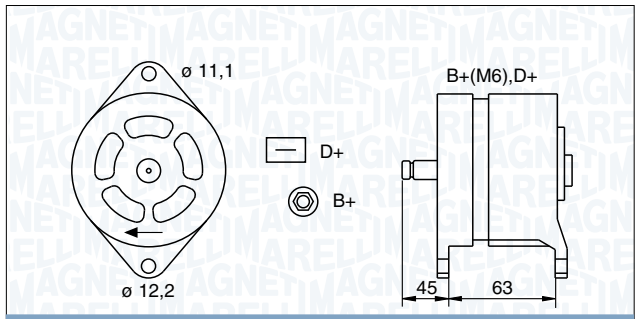

063304087010 MAN873 27A 12V

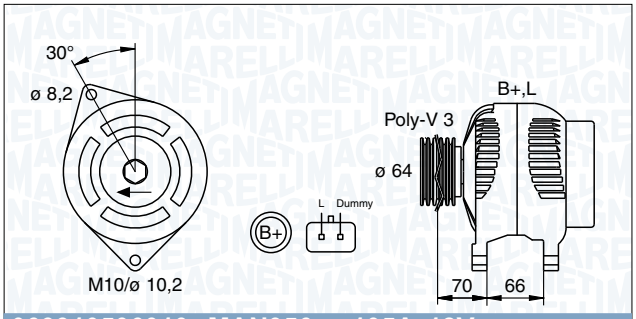

063310506010 MAN956 105A 12V

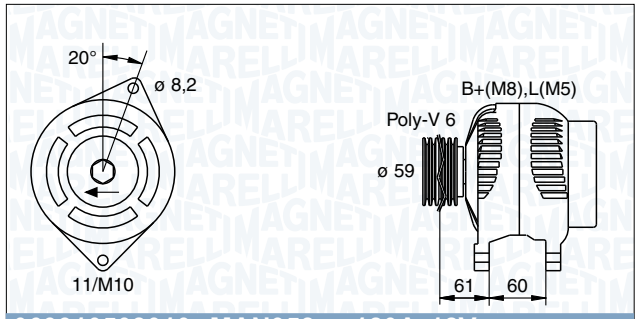

063310508010 MAN958 120A 12V

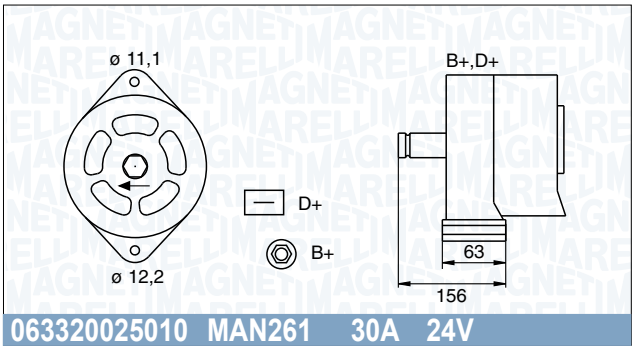

063320025010 MAN261 30A 24V

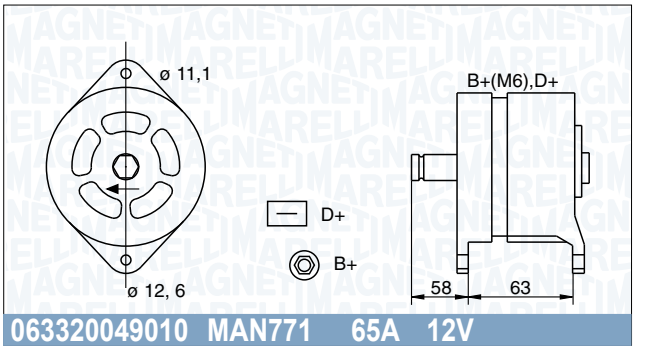

063320049010 MAN771 65A 12V

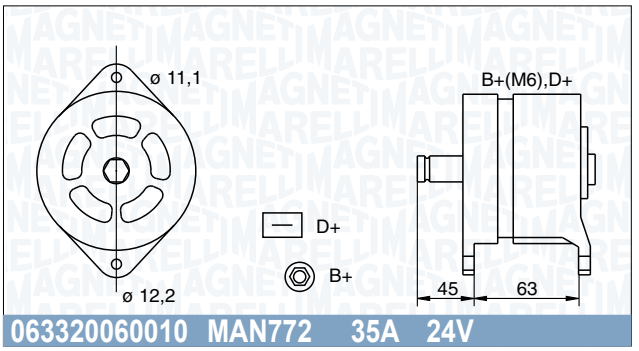

063320060010 MAN772 35A 24V

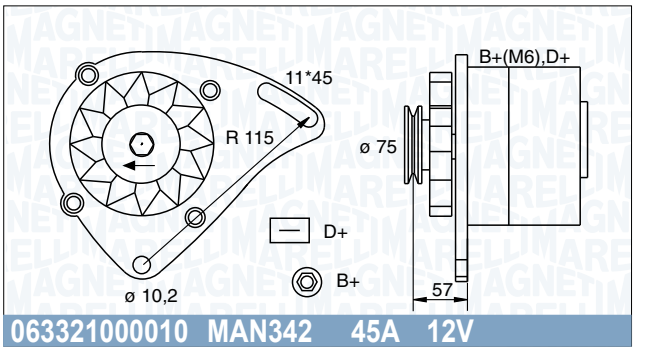

063321000010 MAN342 45A 12V

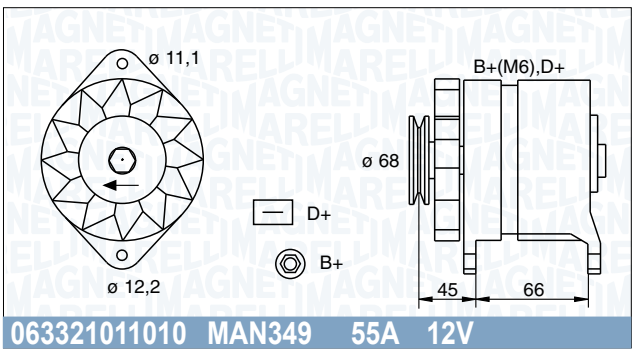

063321011010 MAN349 55A 12V

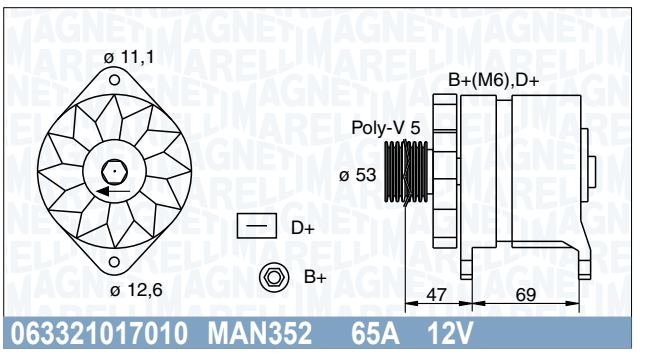

063321017010 MAN352 65A 12V

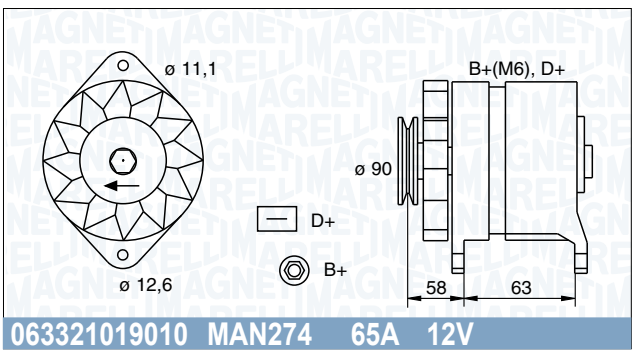

063321019010 MAN274 65A 12V

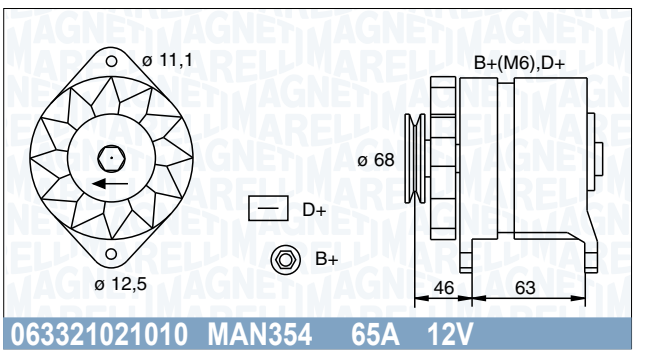

063321021010 MAN354 65A 12V

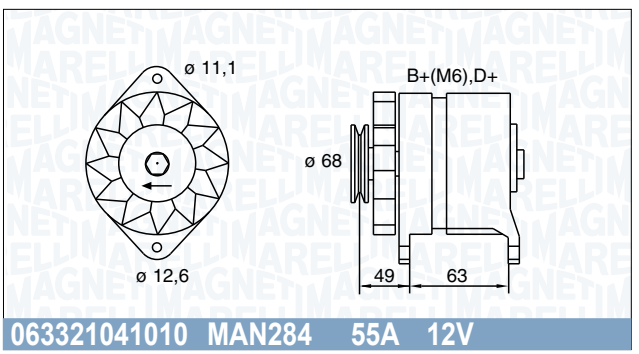

063321041010 MAN284 55A 12V

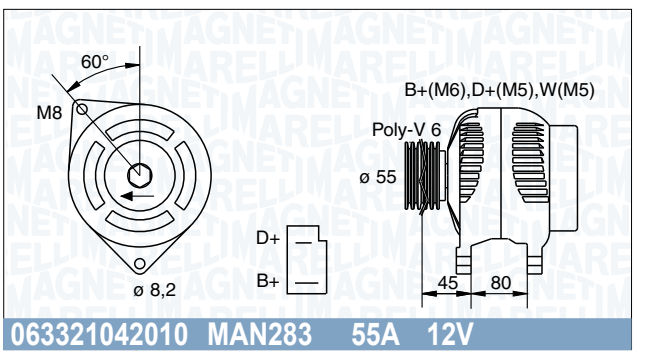

063321042010 MAN283 55A 12V

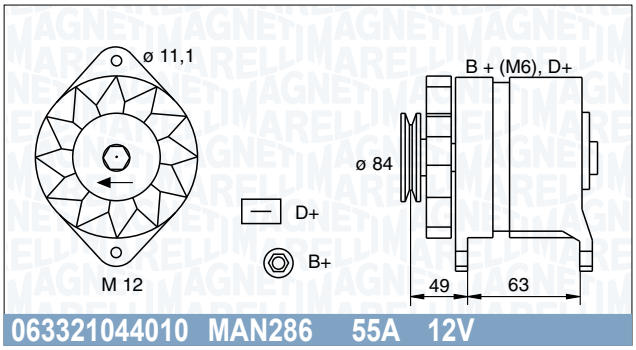

063321044010 MAN286 55A 12V

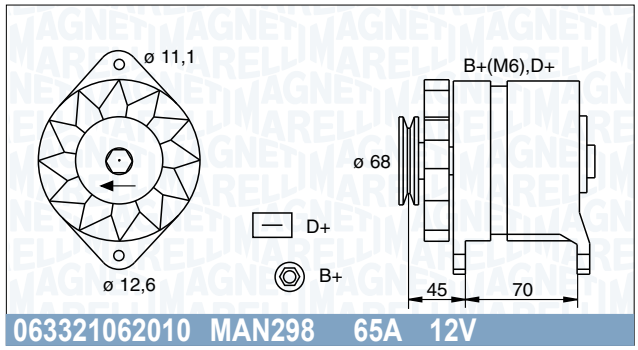

063321062010 MAN298 65A 12V

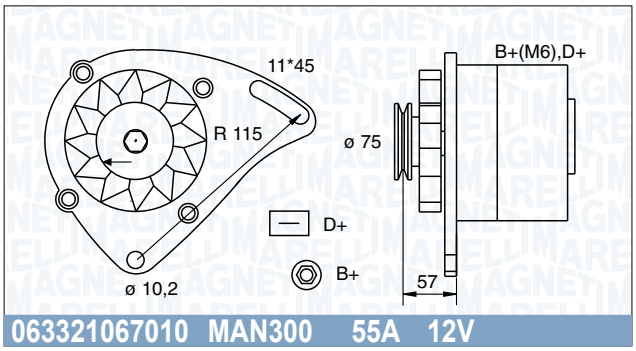

063321067010 MAN300 55A 12V

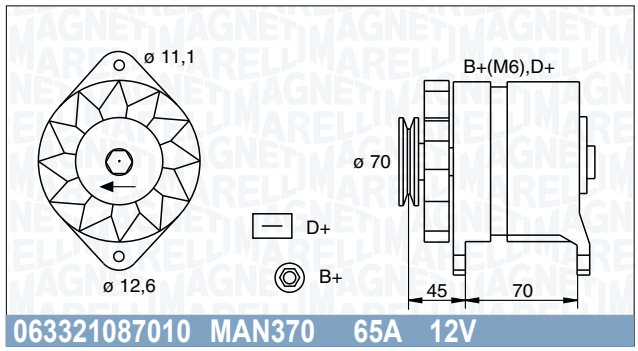

063321087010 MAN370 65A 12V

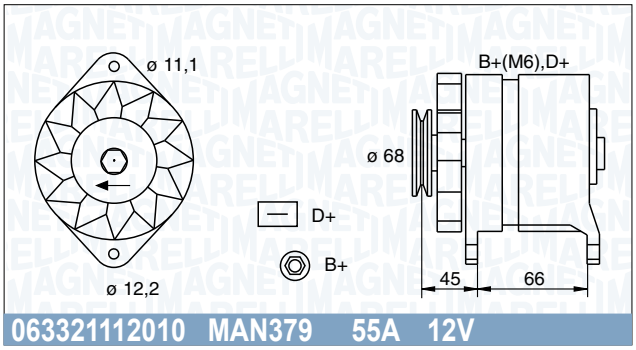

063321112010 MAN379 55A 12V

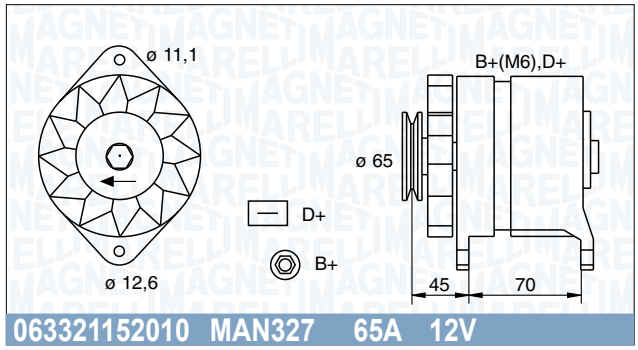

063321152010 MAN327 65A 12V

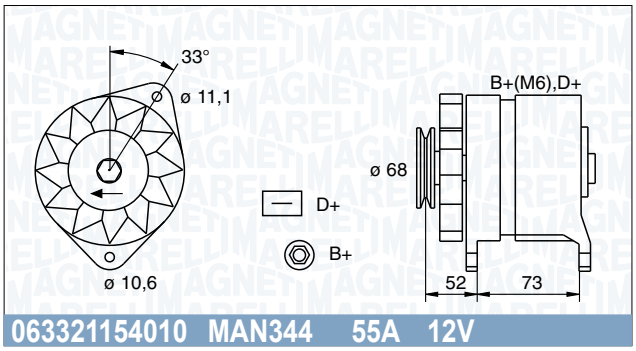

063321154010 MAN344 55A 12V

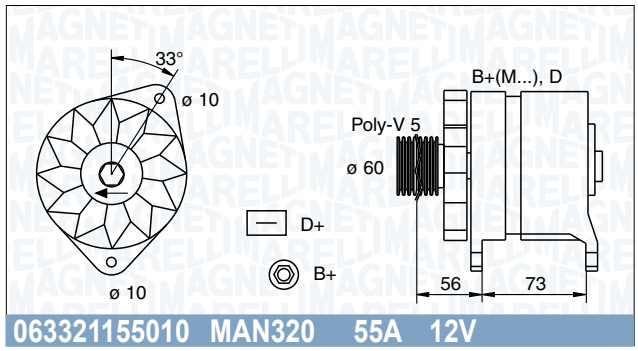

063321155010 MAN320 55A 12V

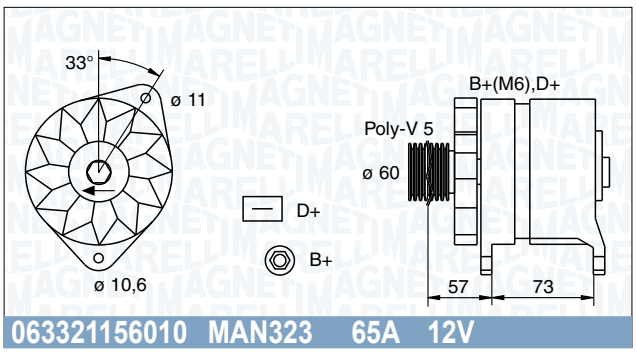

063321156010 MAN323 65A 12V

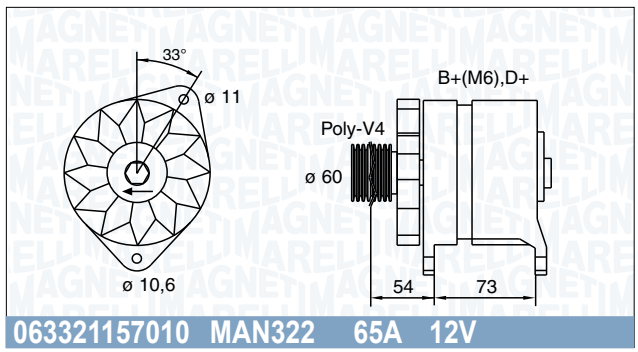

063321157010 MAN322 65A 12V

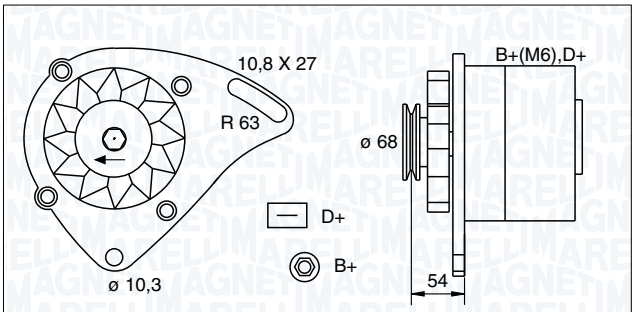

063321165010 MAN382 55A 12V

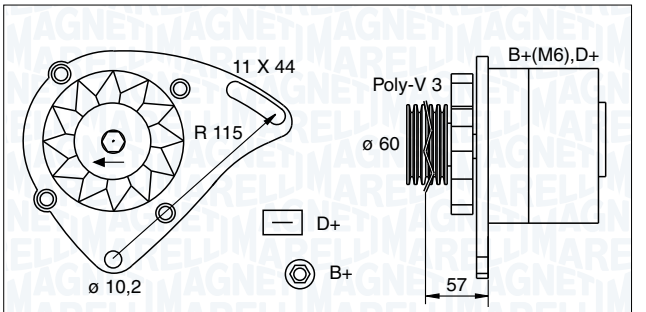

063321173010 MAN331 65A 12V

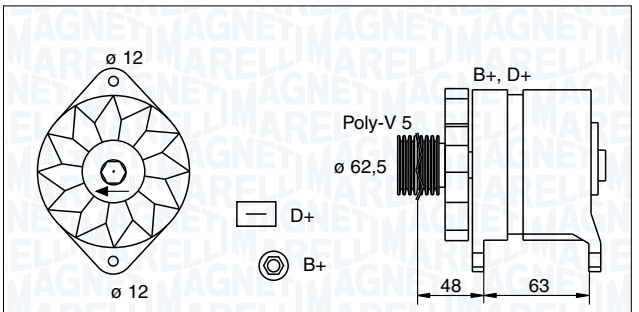

063321191010 MAN330 55A 12V

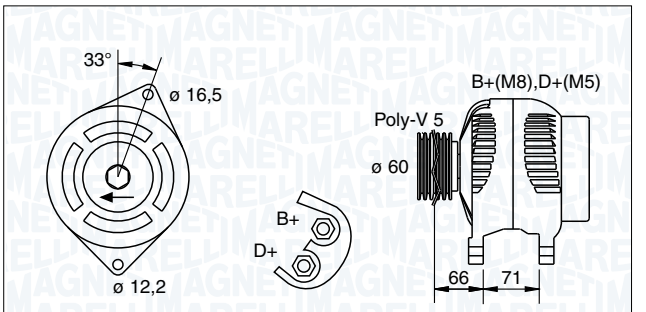

063321328010 MAN784 85A 12V

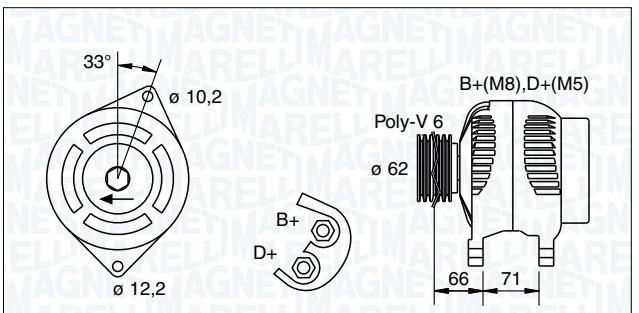

063321332010 MAN642 85A 12V

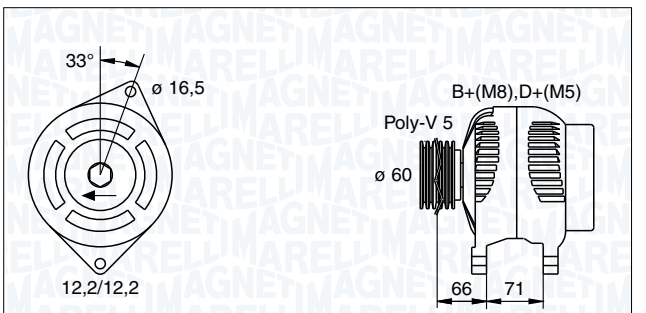

063321340010 MAN646 85A 12V

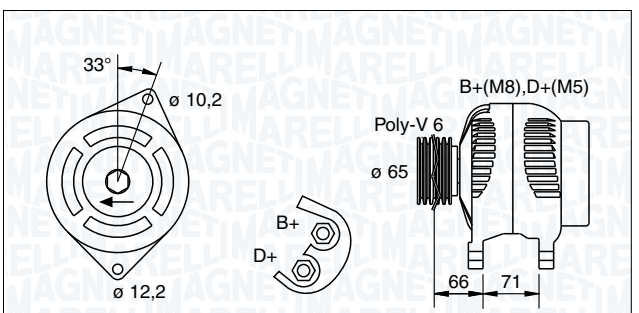

063321391010 MAN789 100A 12V

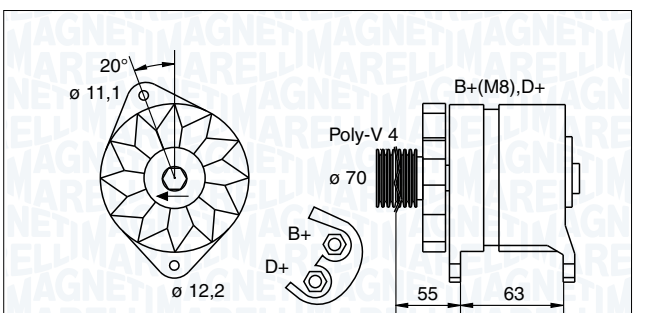

063321395010 MAN782 100A 12V

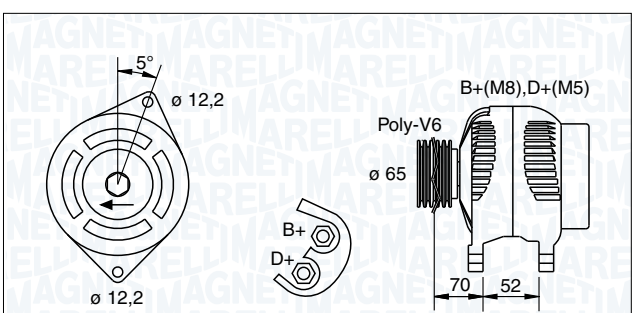

063321402010 MAN791 85A 12V

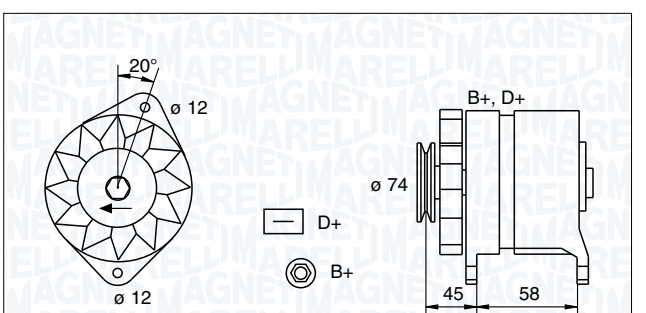

063321409010 MAN909 55A 12V

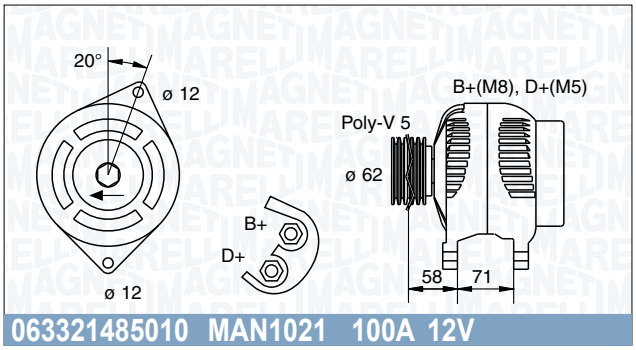

063321485010 MAN1021 100A 12V

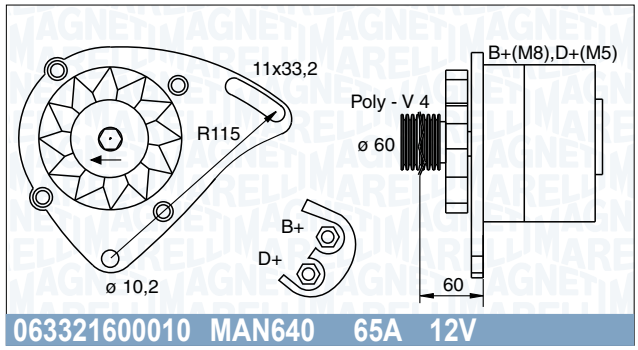

063321600010 MAN640 65A 12V

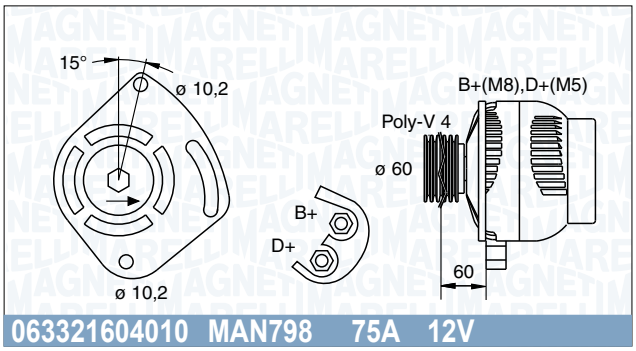

063321604010 MAN798 75A 12V

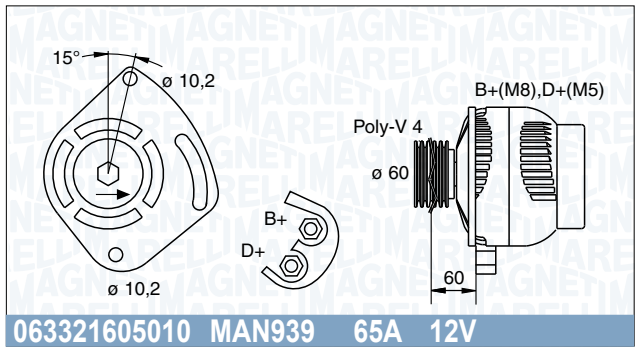

063321605010 MAN939 65A 12V

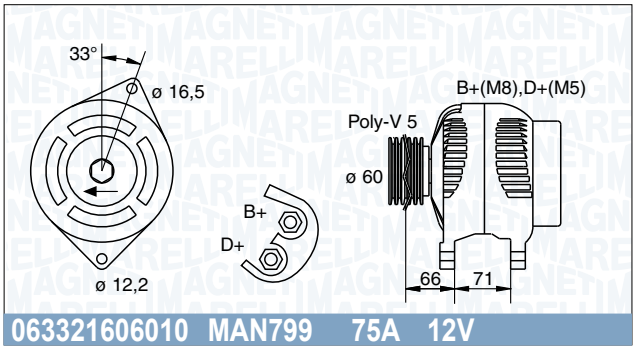

063321606010 MAN799 75A 12V

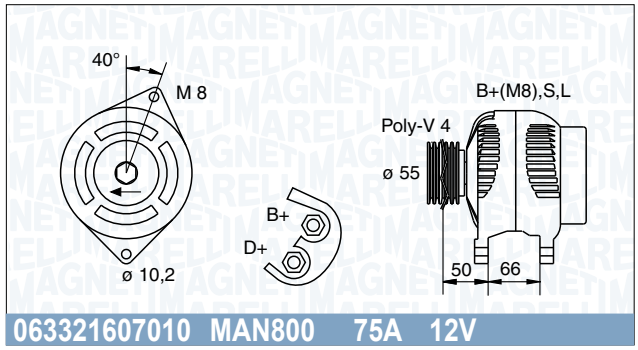

063321607010 MAN800 75A 12V

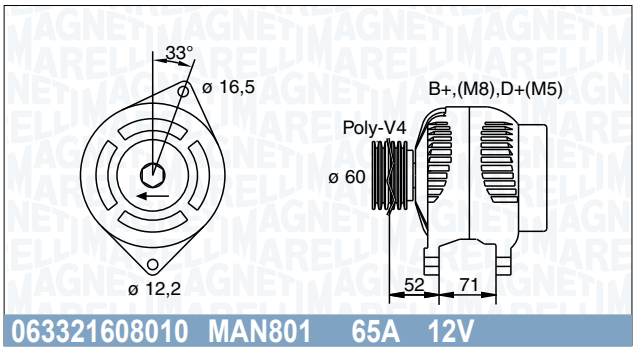

063321608010 MAN801 65A 12V

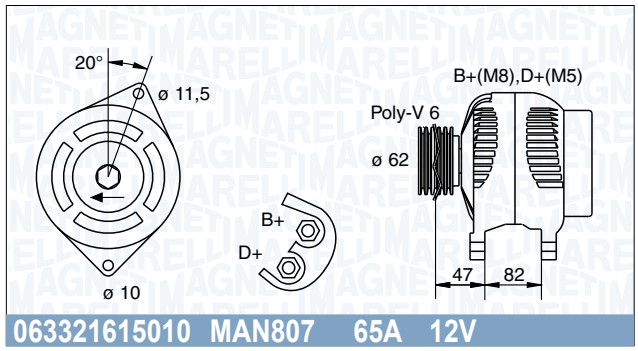

063321615010 MAN807 65A 12V

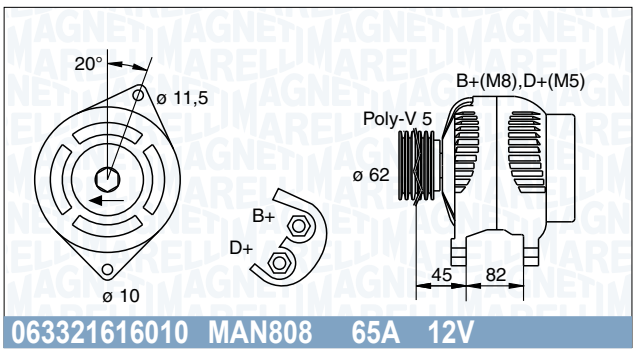

063321616010 MAN808 65A 12V

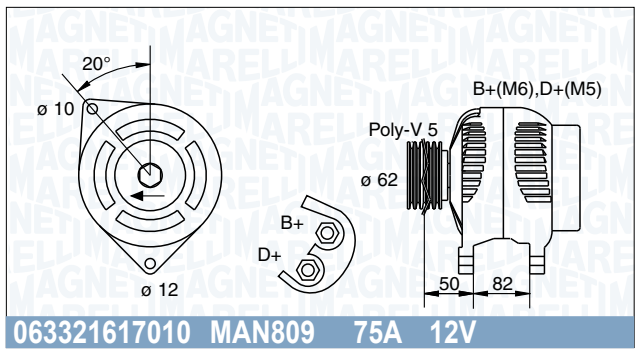

063321617010 MAN809 75A 12V

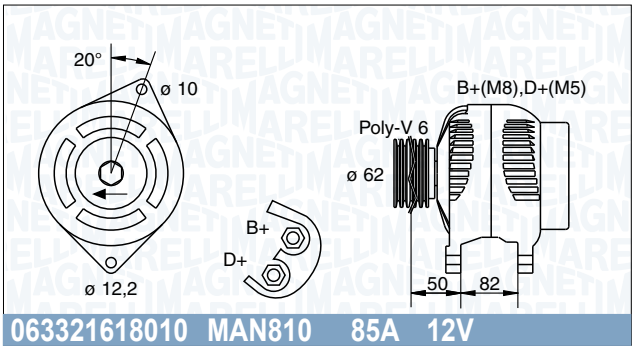

063321618010 MAN810 85A 12V

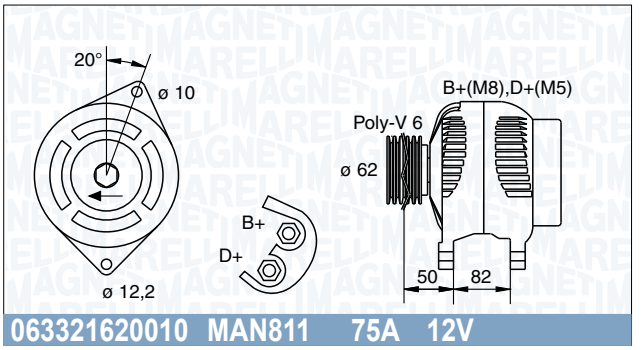

063321620010 MAN811 75A 12V

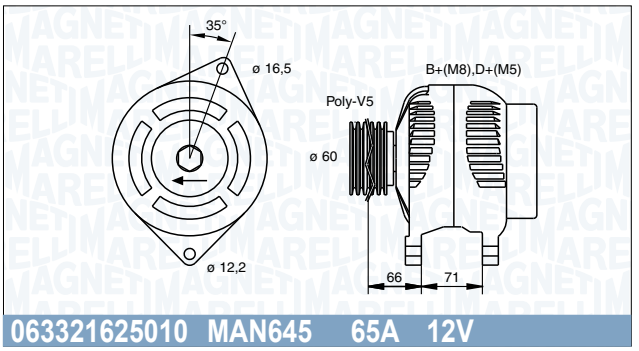

063321625010 MAN645 65A 12V

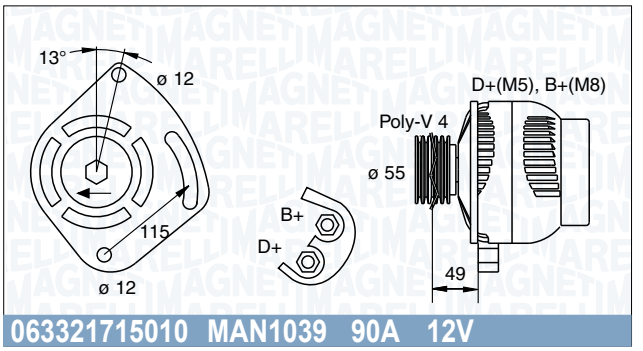

063321715010 MAN1039 90A 12V

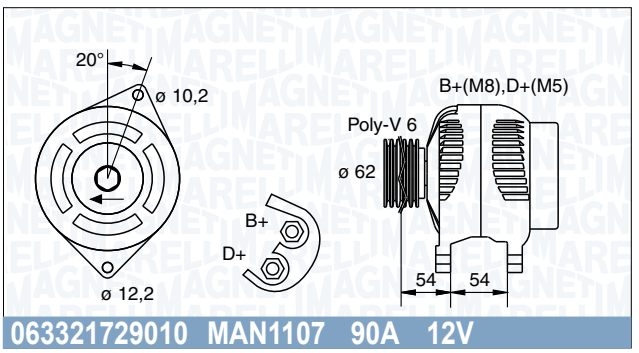

063321729010 MAN1107 90A 12V

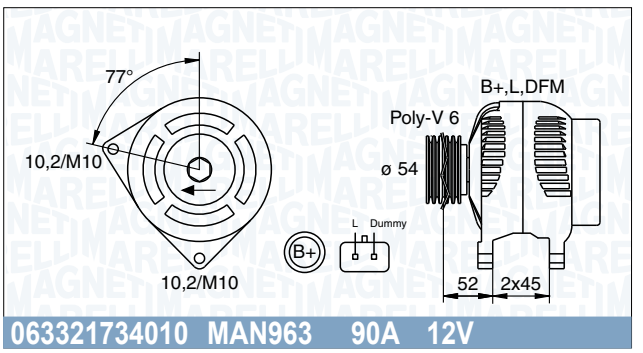

063321734010 MAN963 90A 12V

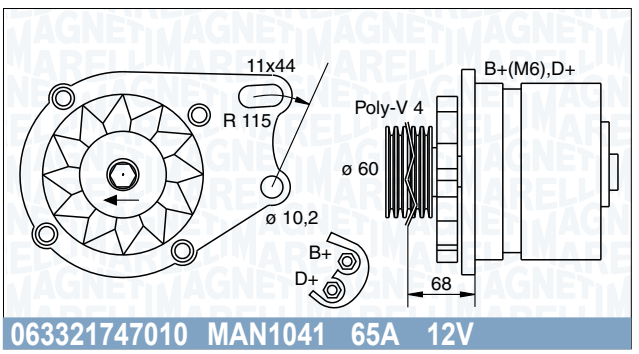

063321747010 MAN1041 65A 12V

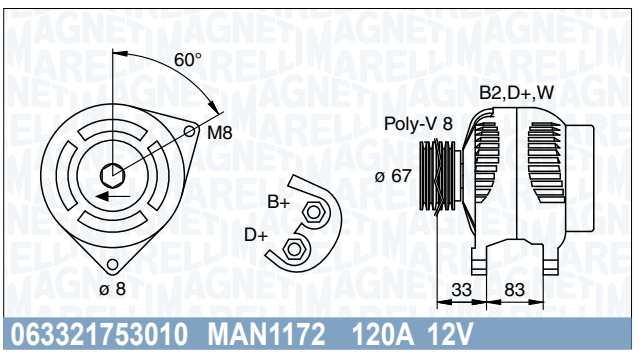

063321753010 MAN1172 120A 12V

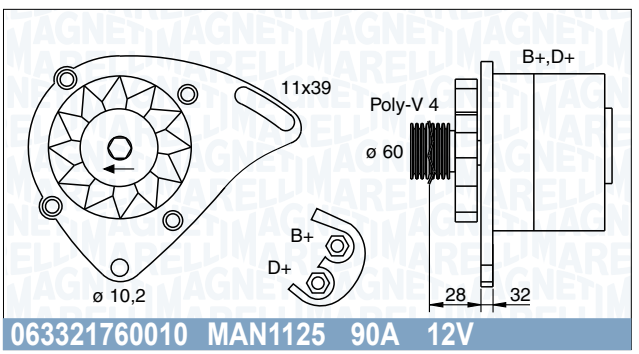

063321760010 MAN1125 90A 12V

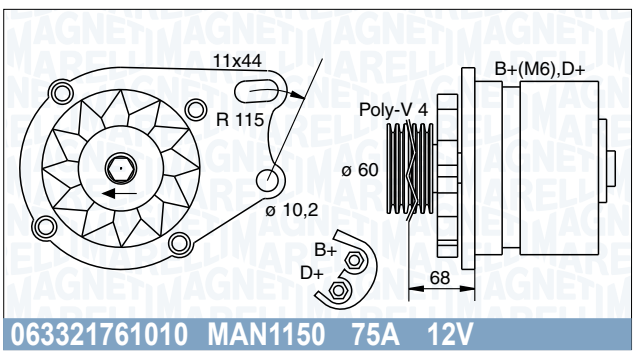

063321761010 MAN1150 75A 12V

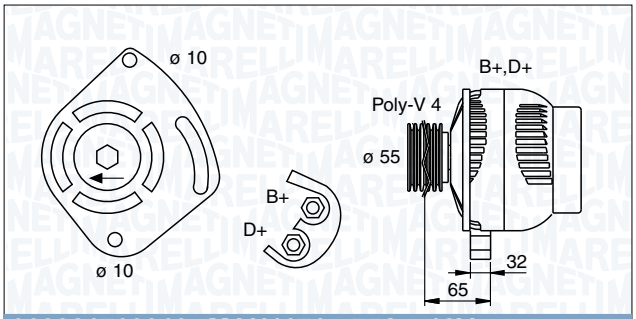

063321763010 MAN1171 75A 12V

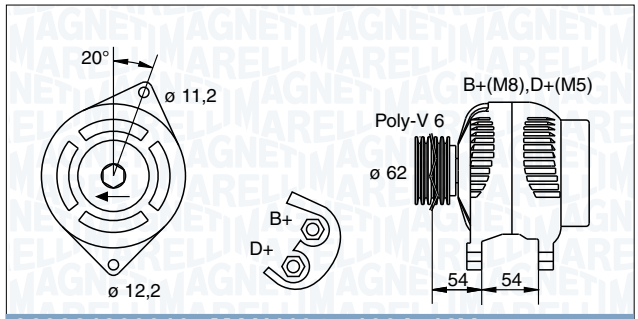

063321800010 MAN1104 100A 12V

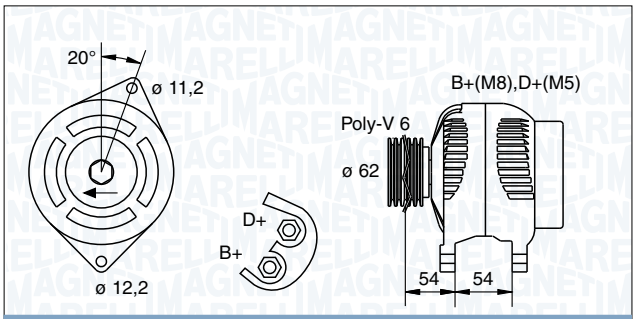

063321802010 MAN1102 85A 12V

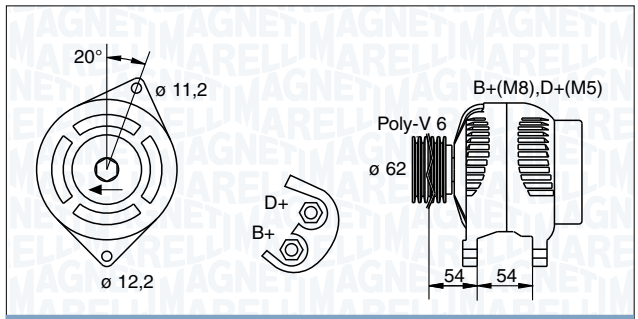

063321803010 MAN1100 100A 12V

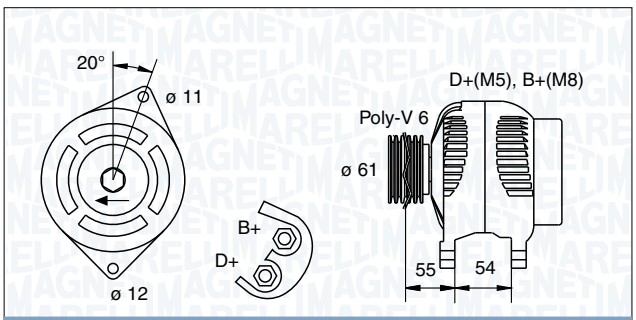

063321806010 MAN1109 85A 12V

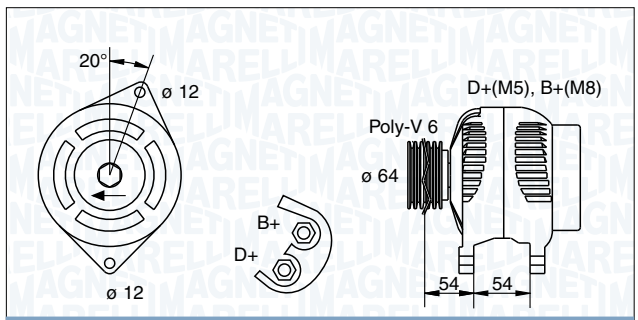

063321810010 MAN1147 85A 12V

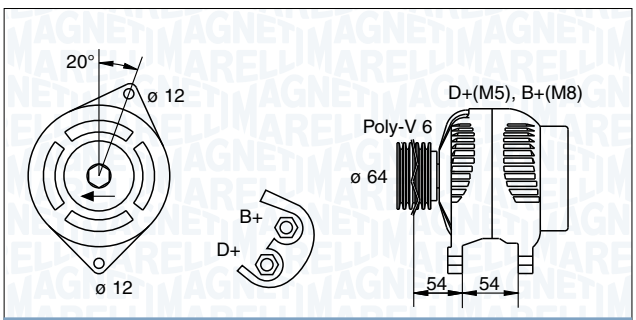

063321813010 MAN1151 75A 12V

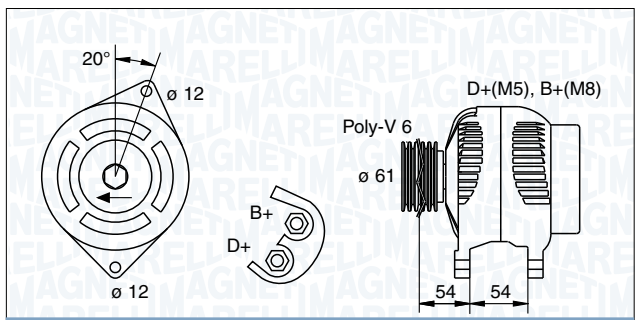

063321819010 MAN1110 90A 12V

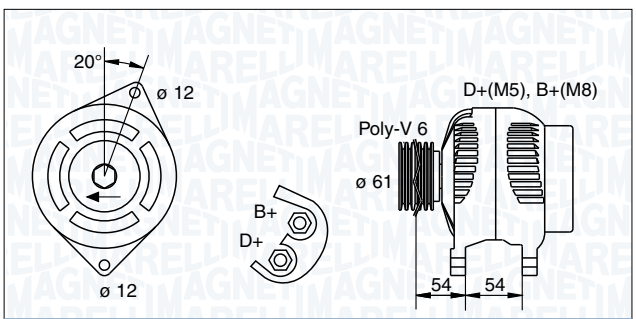

063321826010 MAN1127 105A 12V

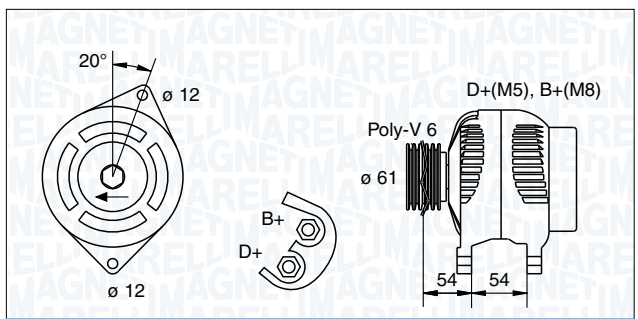

063321833010 MAN1128 65A 12V

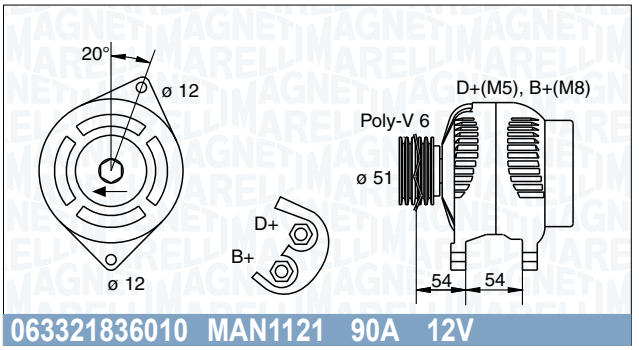

063321836010 MAN1121 90A 12V

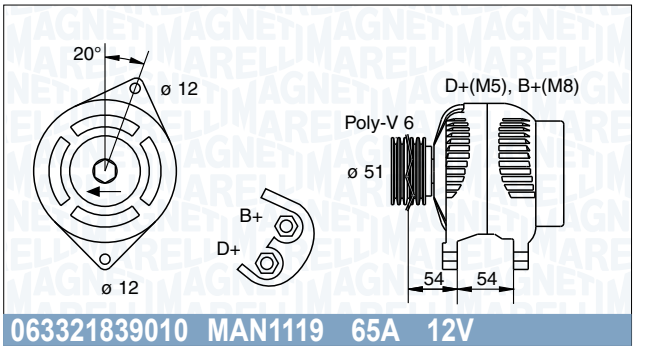

063321839010 MAN1119 65A 12V

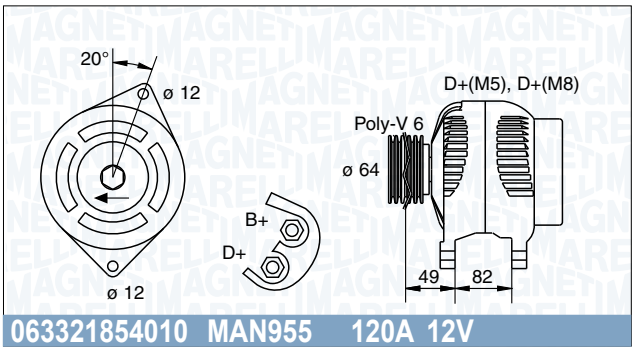

063321854010 MAN955 120A 12V

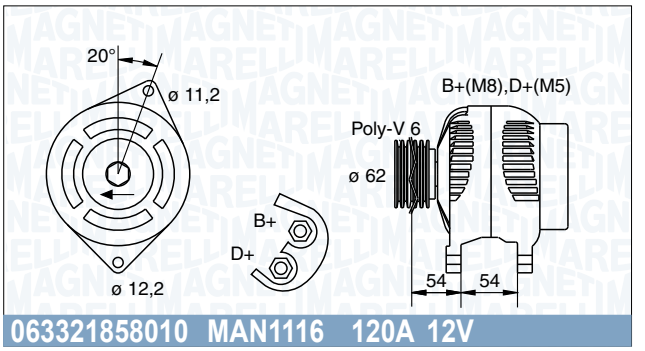

063321858010 MAN1116 120A 12V

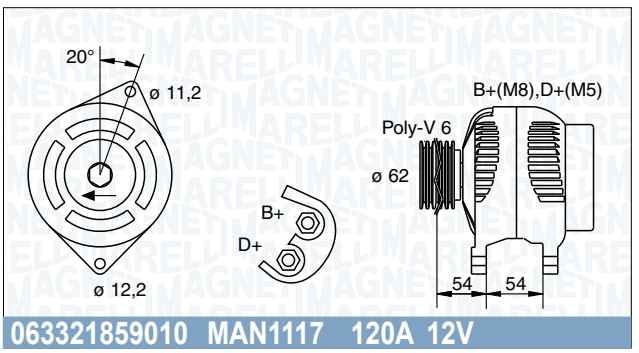

063321859010 MAN1117 120A 12V

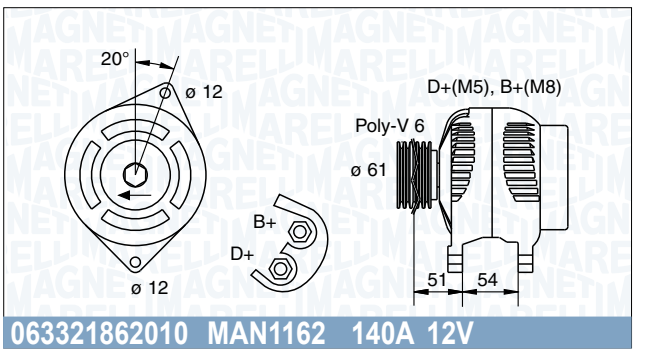

063321862010 MAN1162 140A 12V

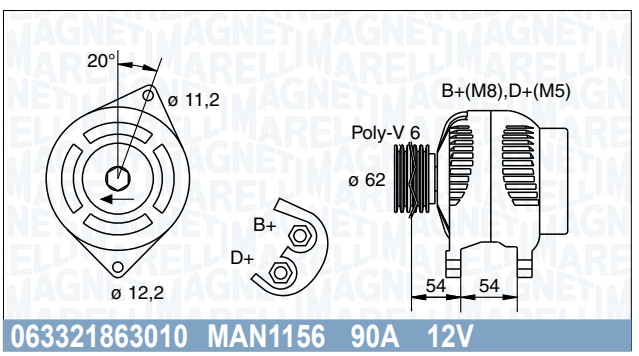

063321863010 MAN1156 90A 12V

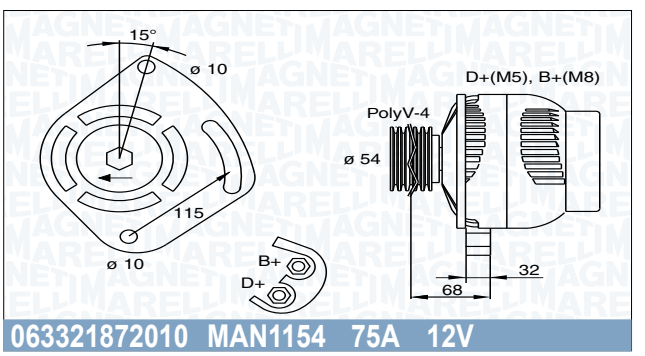

063321872010 MAN1154 75A 12V

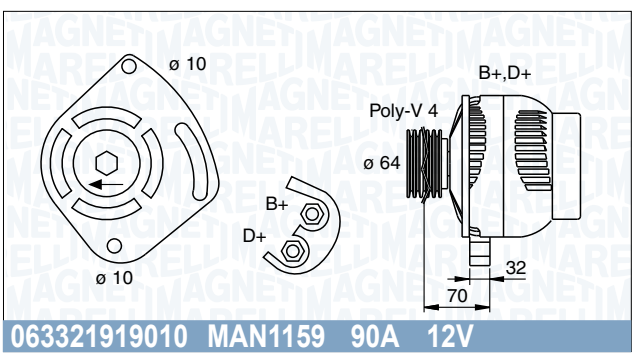

063321919010 MAN1159 90A 12V

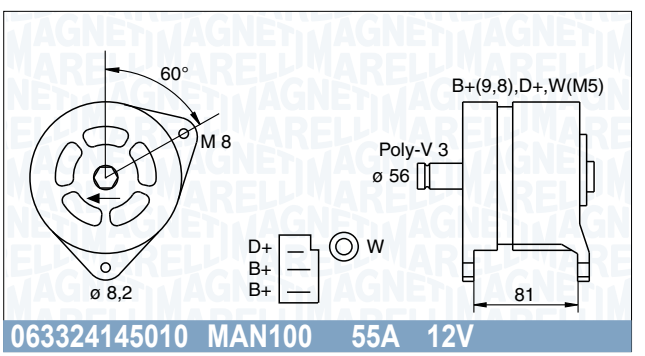

063324145010 MAN100 55A 12V

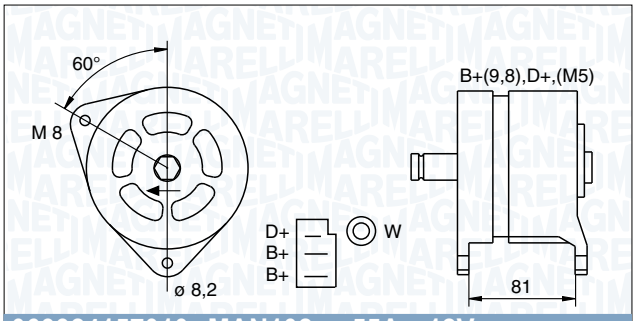

063324157010 MAN102 55A 12V

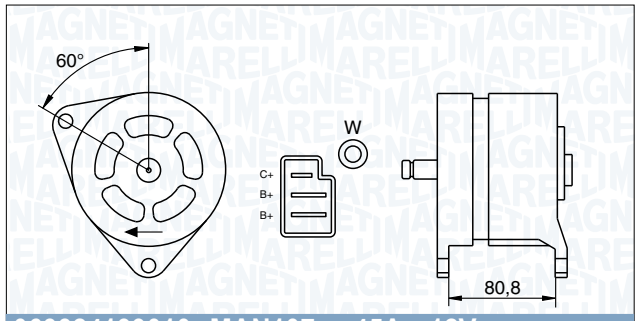

063324199010 MAN107 45A 12V

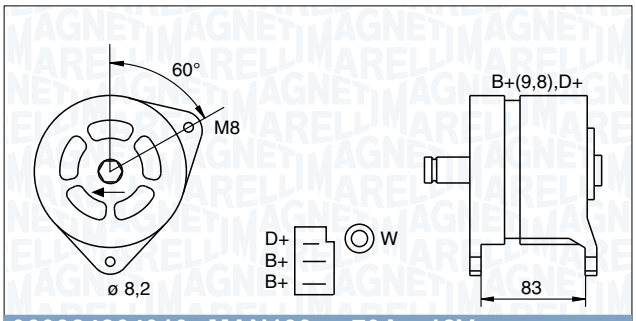

063324264010 MAN139 70A 12V

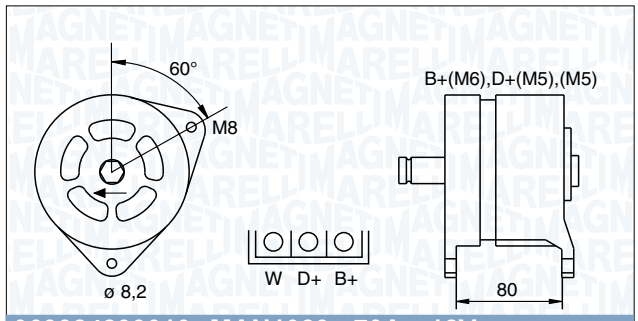

063324293010 MAN1023 70A 12V

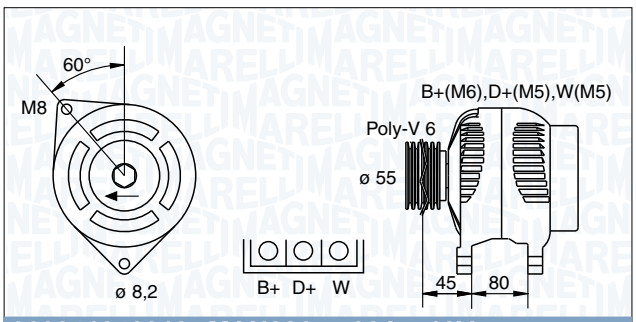

063341343010 MAN826 90A 12V

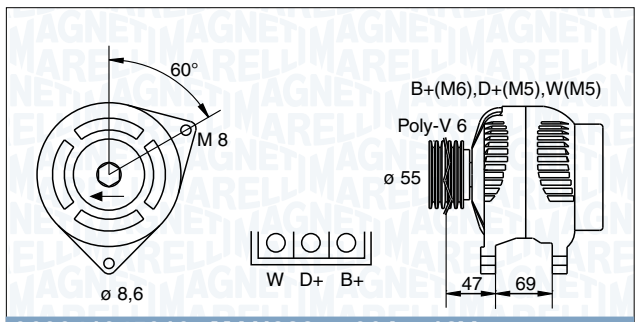

063341345010 MAN828 90A 12V

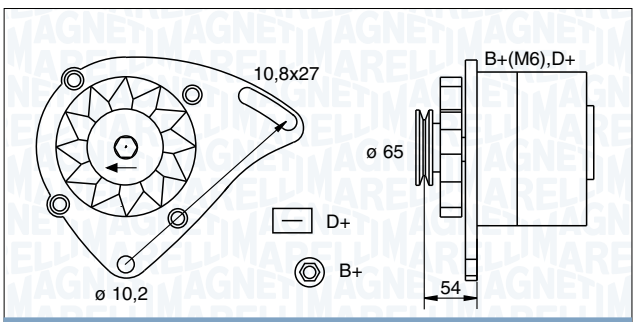

063341454010 MAN1014 55A 12V

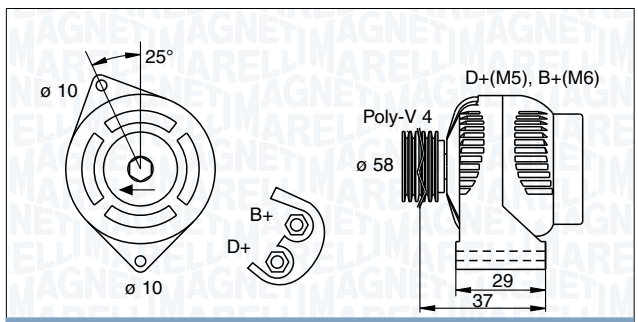

063341658010 MAN1009 75A 12V

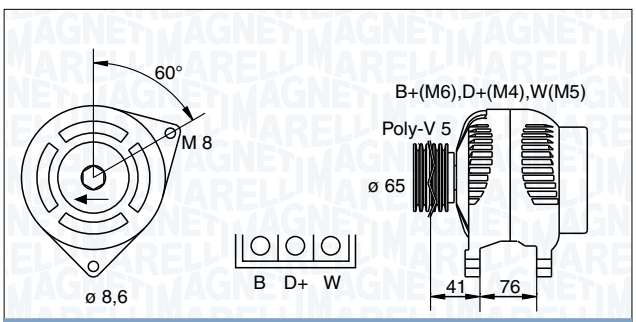

063341695010 MAN833 75A 12V

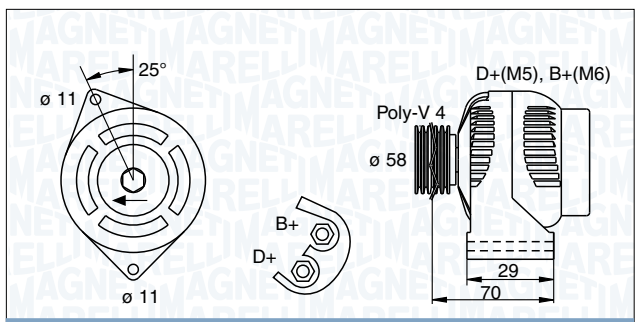

063341702010 MAN1008 65A 12V

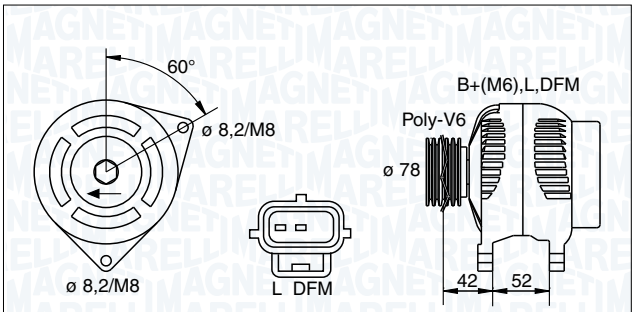

063341711010 MAN1142 90A 12V

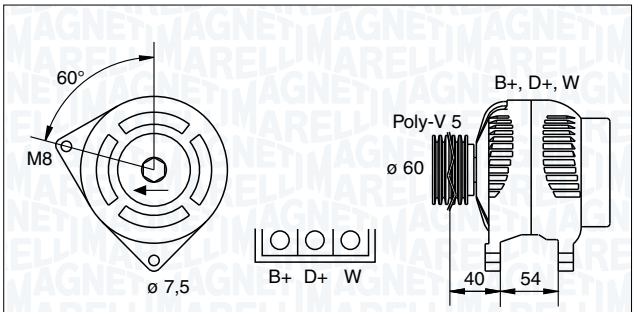

063341730010 MAN938 70A 12V

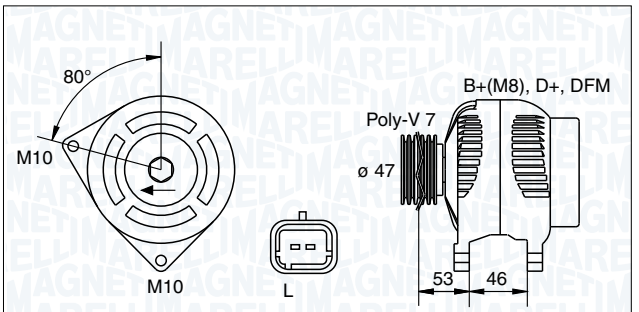

063341734010 MAN1166 75A 12V

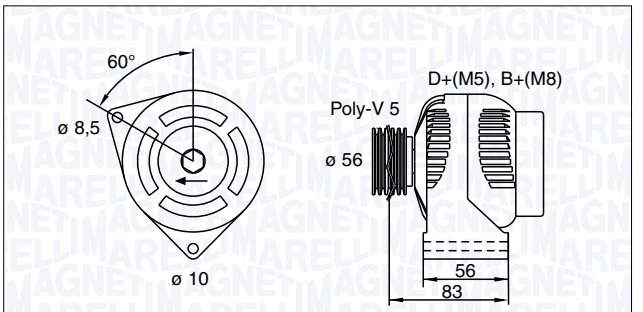

063341740010 MAN1163 75A 12V

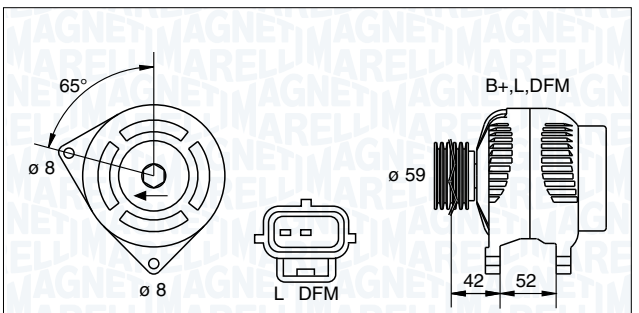

063341758010 MAN1143 80A 12V

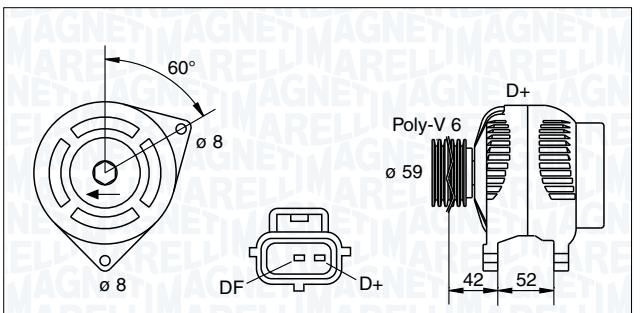

063341778010 MAN1155 90A 12V

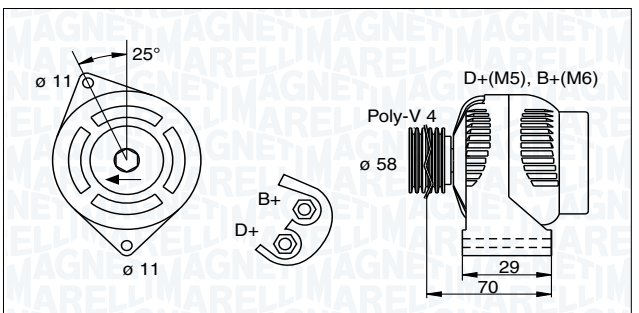

063341896010 MAN1170 75A 12V

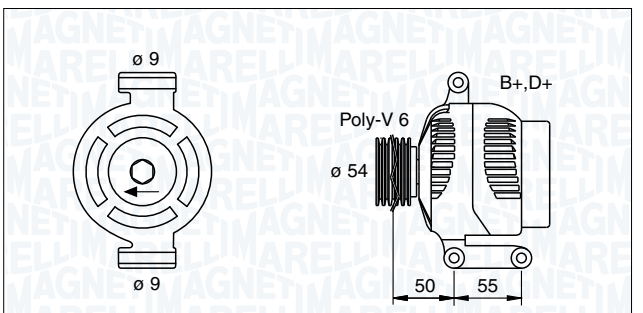

063358061010 MAN1097 90A 12V

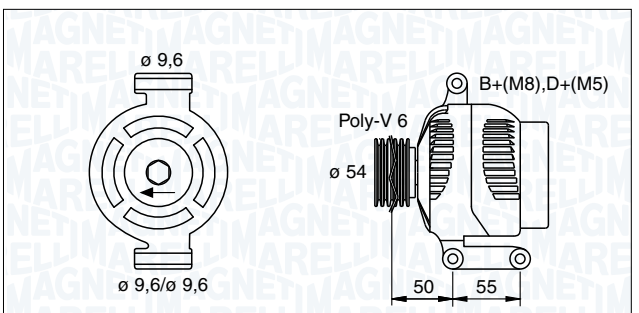

063358062010 MAN1098 75A 12V

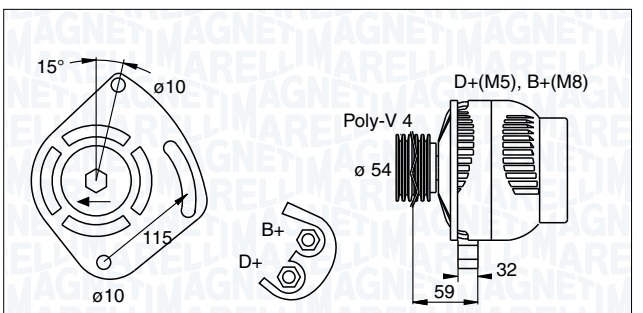

063377001010 MAN7001 70A 12V

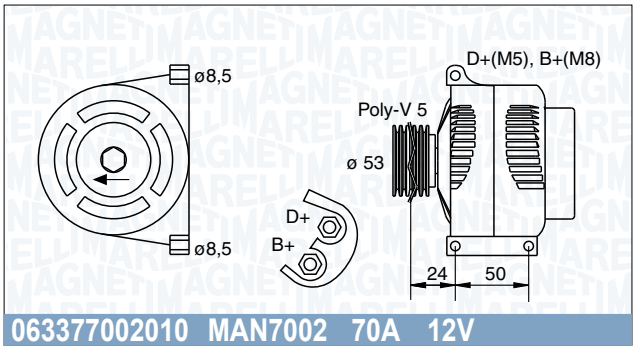

063377002010 MAN7002 70A 12V

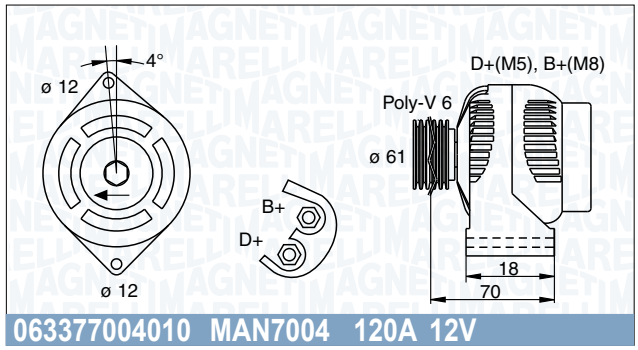

063377004010 MAN7004 120A 12V

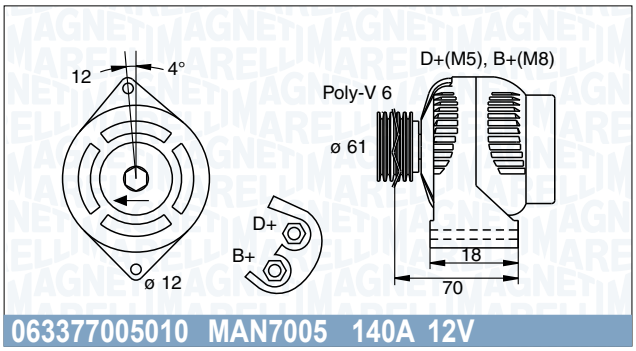

063377005010 MAN7005 140A 12V

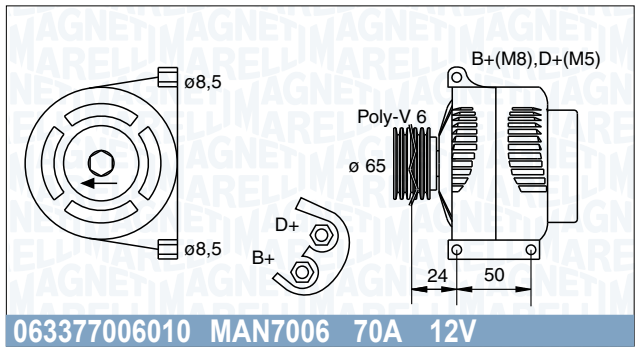

063377006010 MAN7006 70A 12V

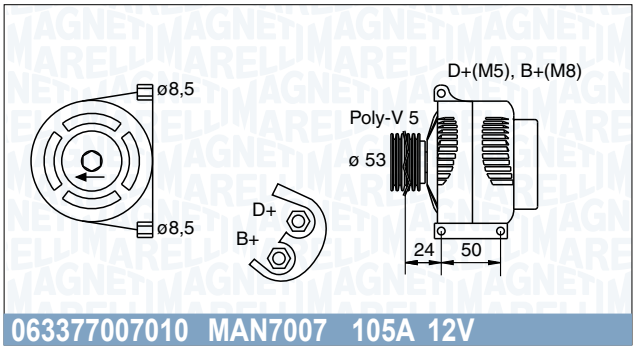

063377007010 MAN7007 105A 12V

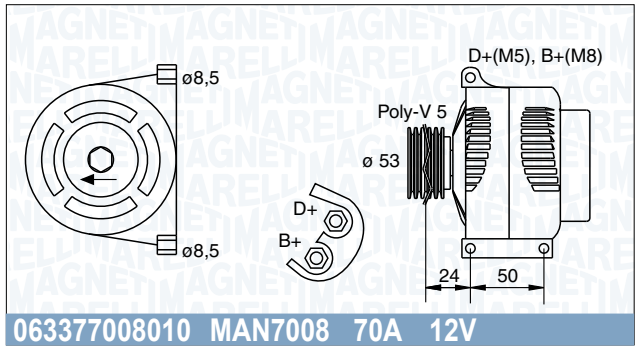

063377008010 MAN7008 70A 12V

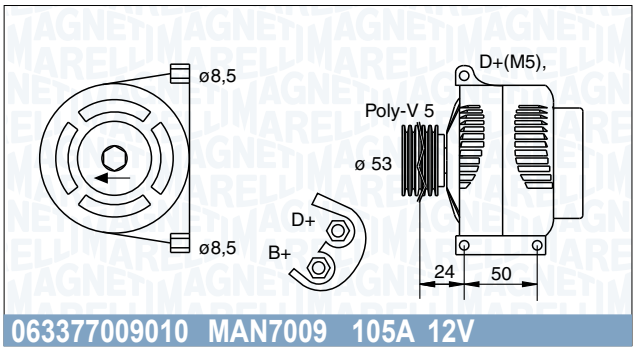

063377009010 MAN7009 105A 12V

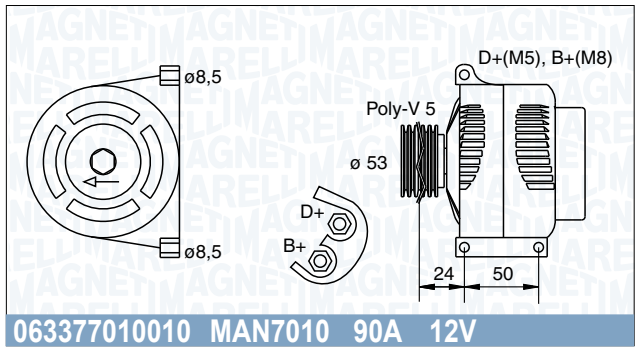

063377010010 MAN7010 90A 12V

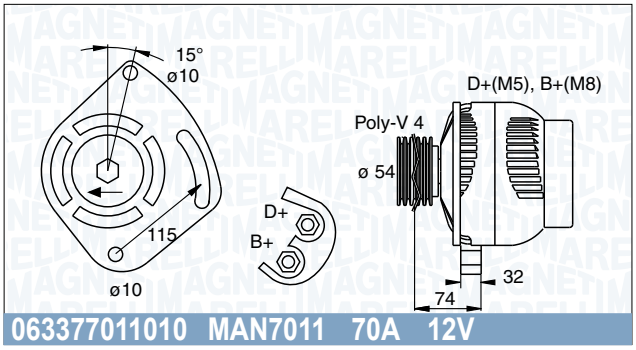

063377011010 MAN7011 70A 12V

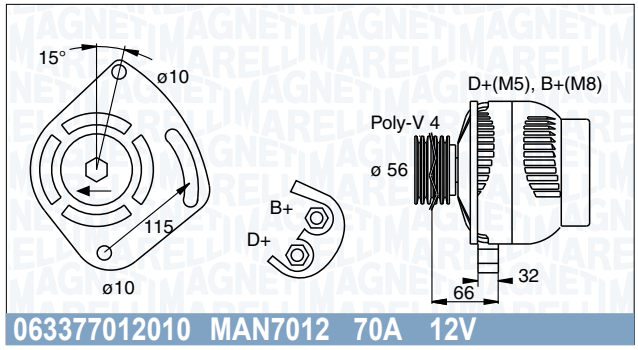

063377012010 MAN7012 70A 12V

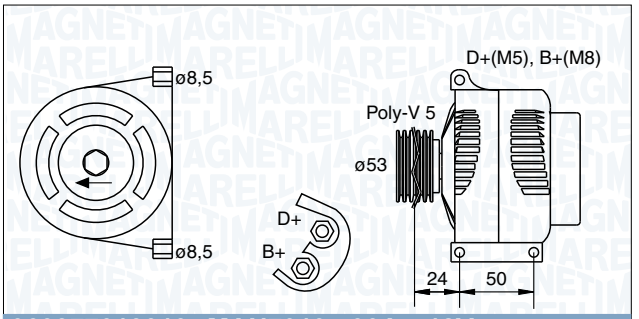

063377013010 MAN7013 90A 12V

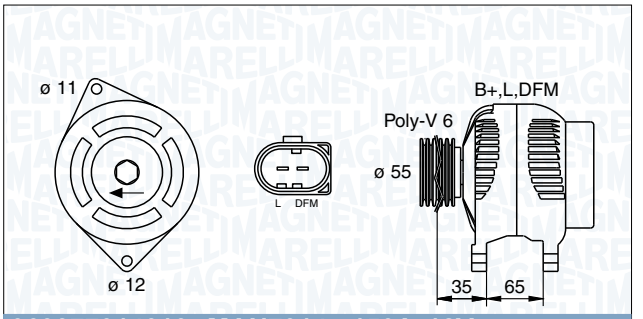

063377014010 MAN7014 150A 12V

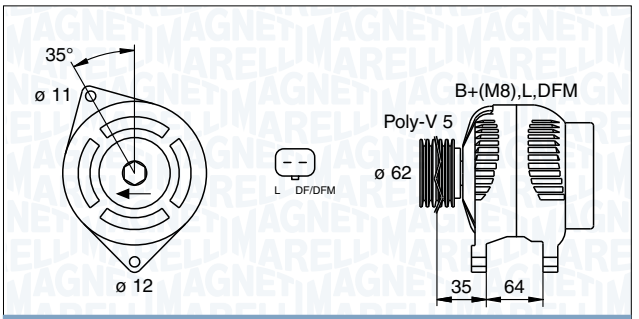

063377015010 MAN7015 150A 12V

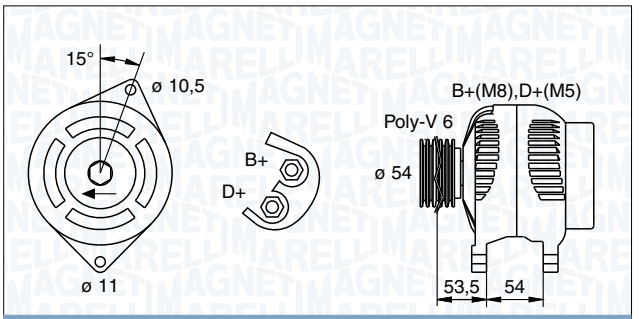

063377016010 MAN7016 90A 12V

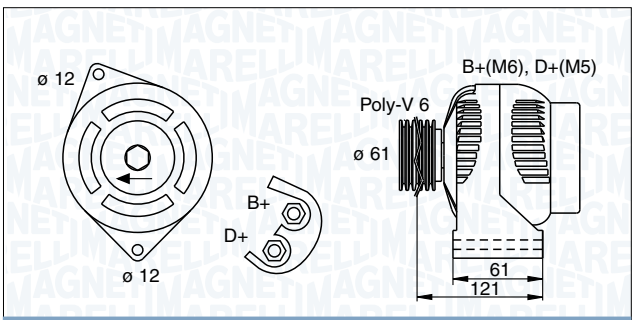

063377017010 MAN7017 100A 12V

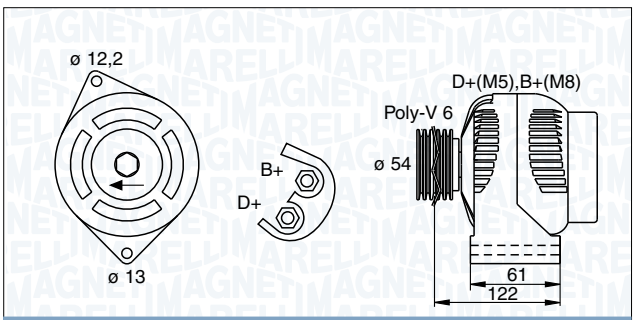

063377018010 MAN7018 120A 12V

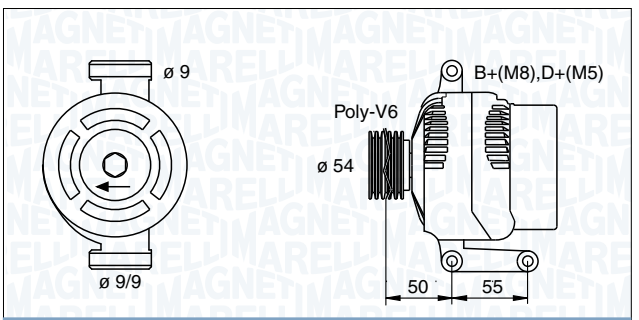

063377019010 MAN7019 90A 12V

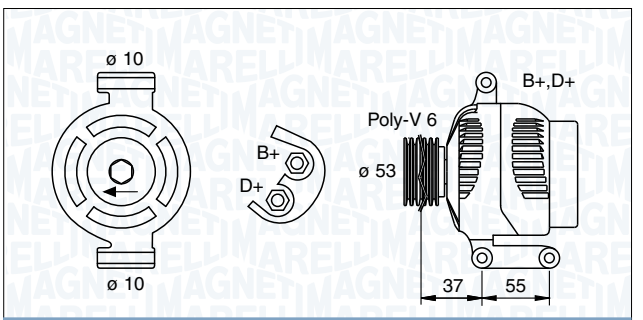

063377020010 MAN7020 105A 12V

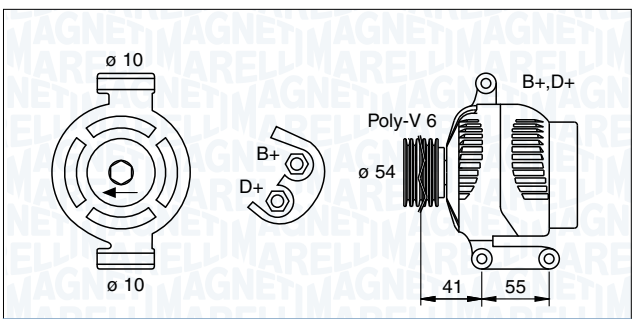

063377021010 MAN7021 75A 12V

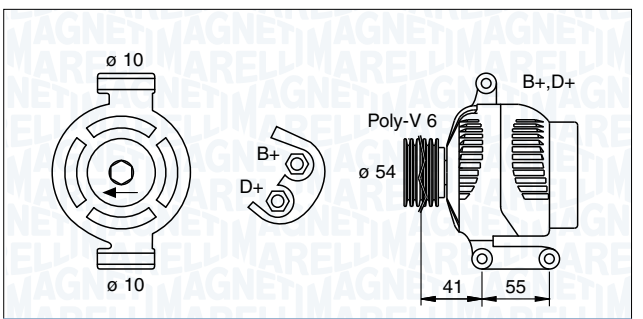

063377022010 MAN7022 90A 12V

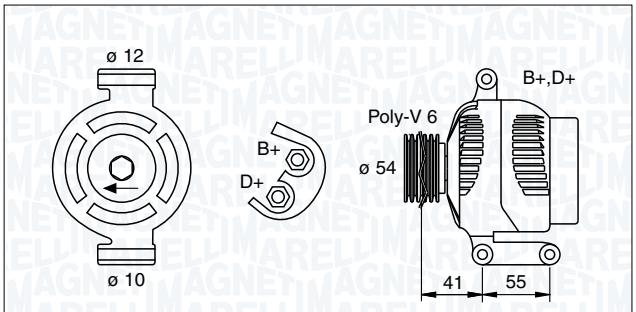

063377023010 MAN7023 105A 12V

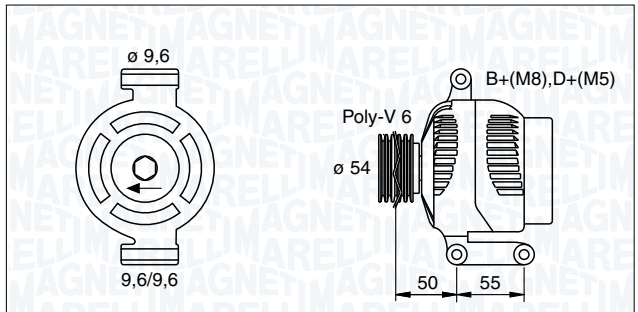

063377024010 MAN7024 70A 12V

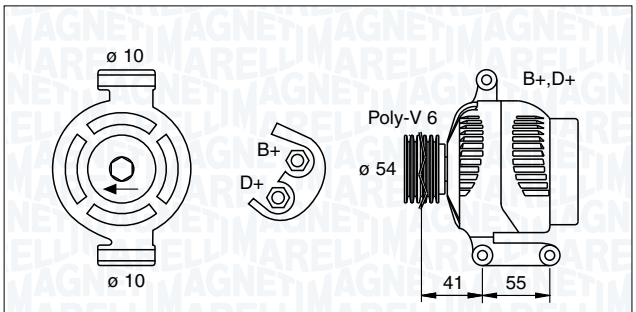

063377025010 MAN7025 105A 12V

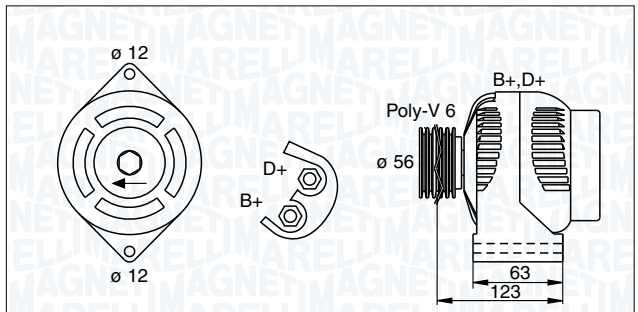

063377026010 MAN7026 120A 12V

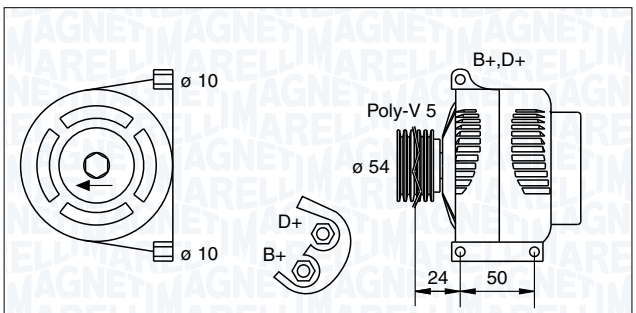

063377027010 MAN7027 120A 12V

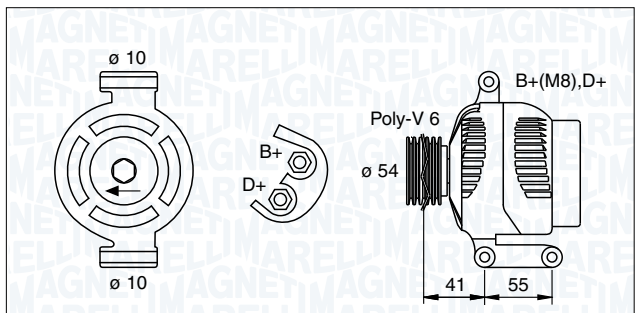

063377028010 MAN7028 120A 12V

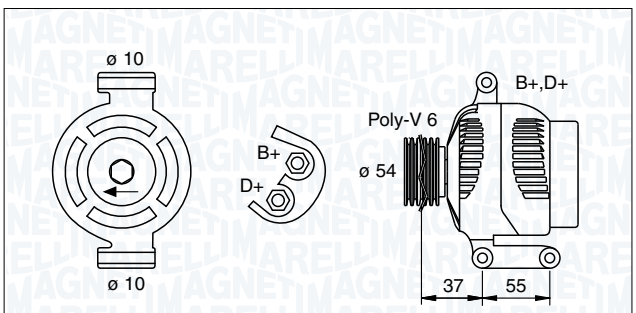

063377029010 MAN7029 120A 12V

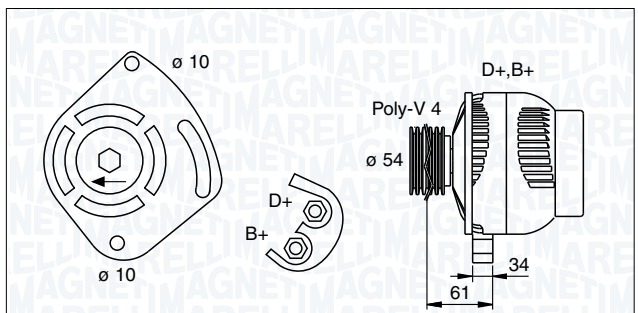

063377030010 MAN7030 90A 12V

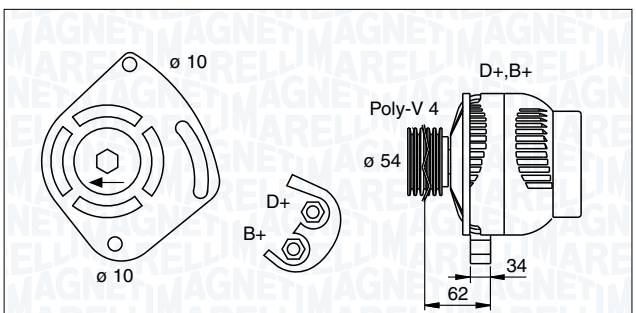

063377031010 MAN7031 105A 12V

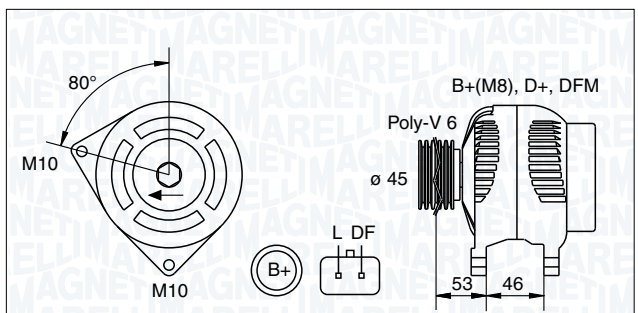

063377300010 MAN7300 90A 12V

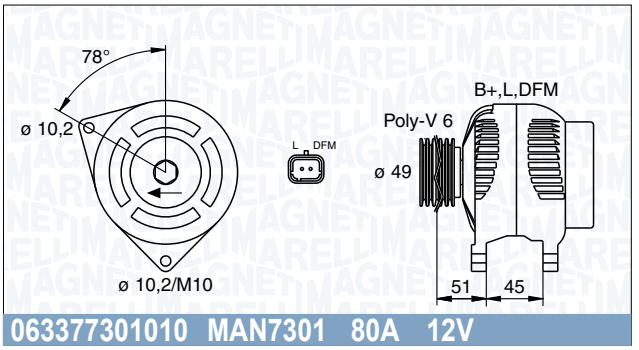

063377301010 MAN7301 80A 12V

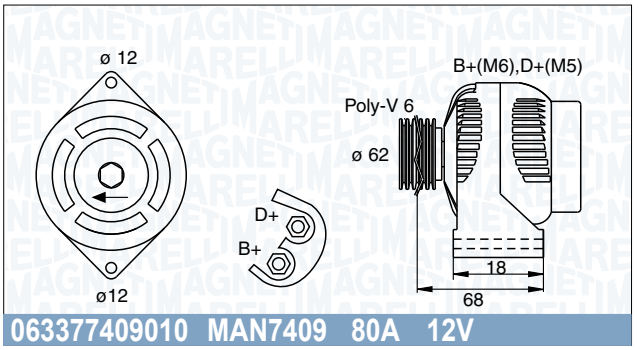

063377409010 MAN7409 80A 12V

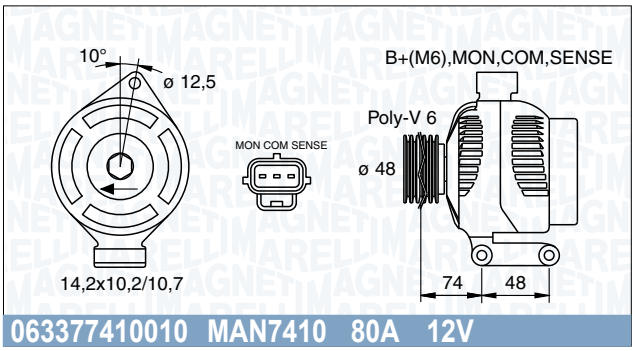

063377410010 MAN7410 80A 12V

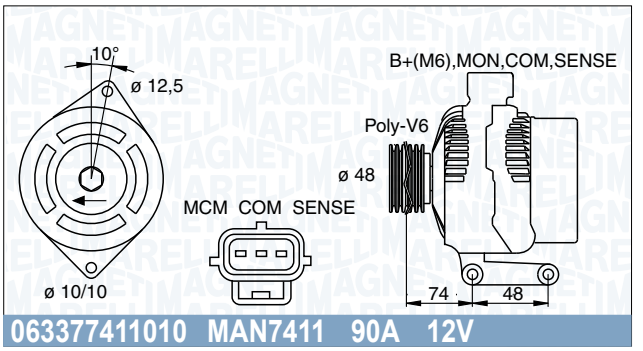

063377411010 MAN7411 90A 12V

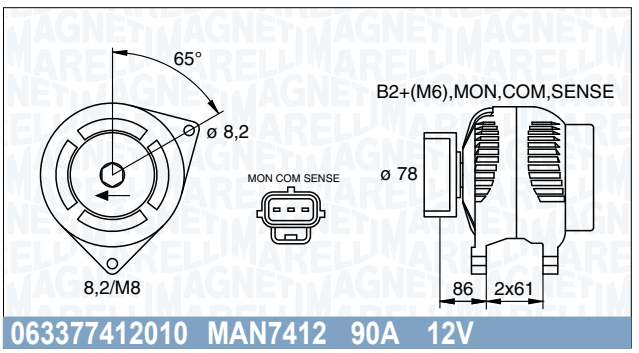

063377412010 MAN7412 90A 12V

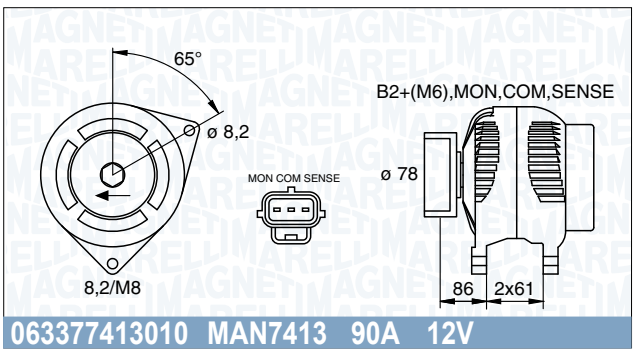

063377413010 MAN7413 90A 12V

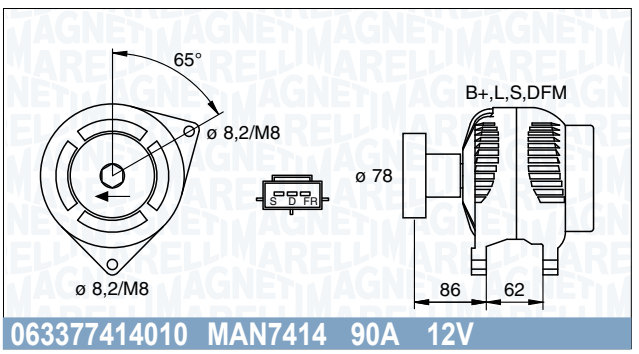

063377414010 MAN7414 90A 12V

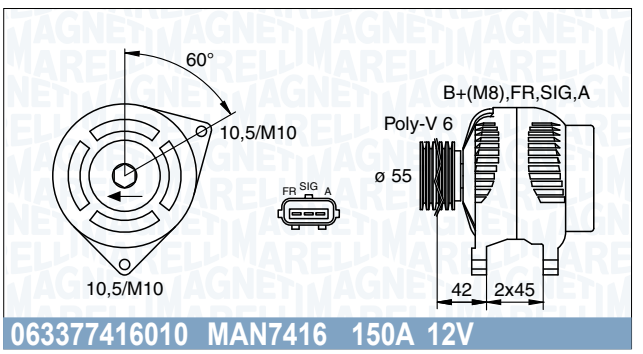

063377416010 MAN7416 150A 12V

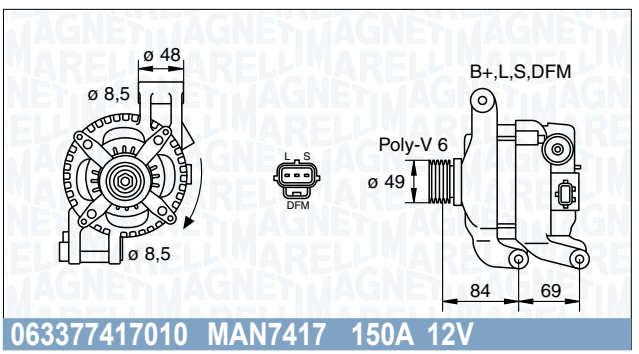

063377417010 MAN7417 150A 12V

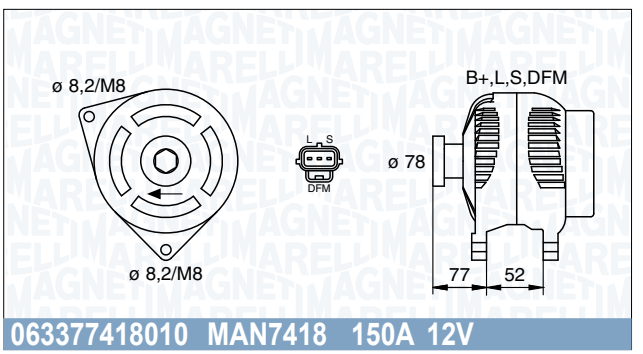

063377418010 MAN7418 150A 12V

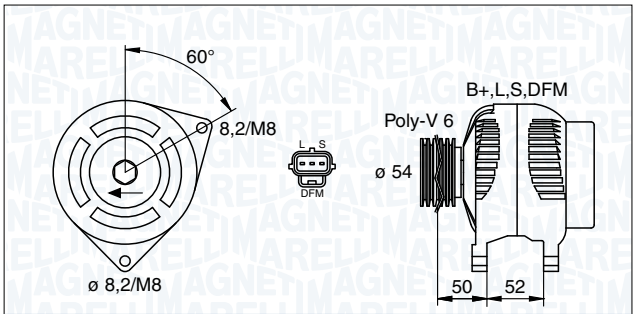

063377419010 MAN7419 150A 12V

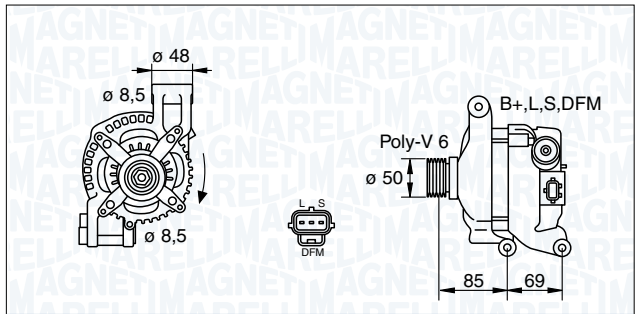

063377420010 MAN7420 150A 12V

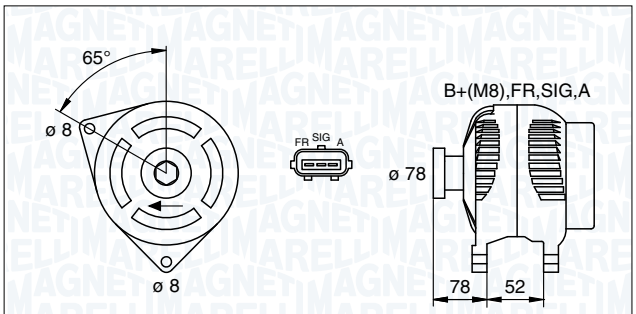

063377421010 MAN7421 105A 12V

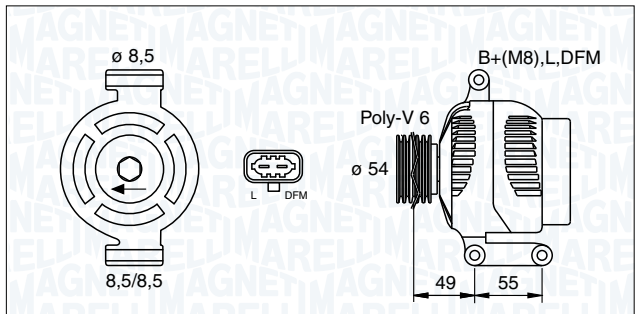

063377423010 MAN7423 70A 12V

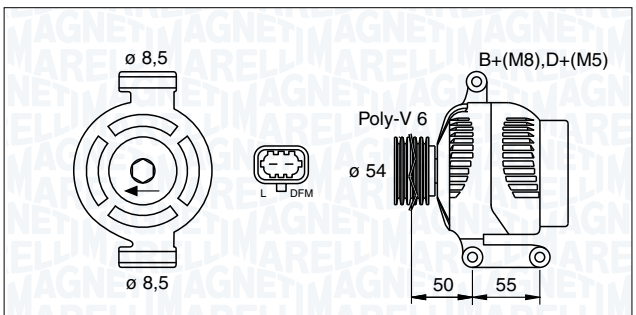

063377424010 MAN7424 105A 12V

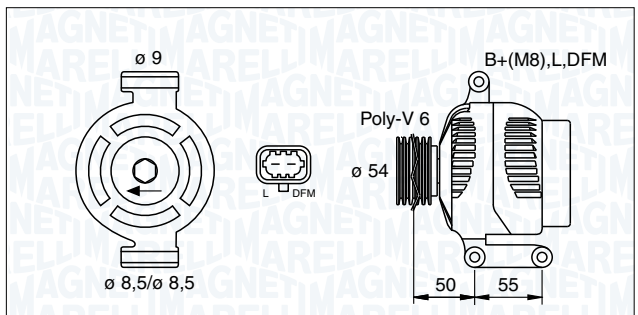

063377425010 MAN7425 120A 12V

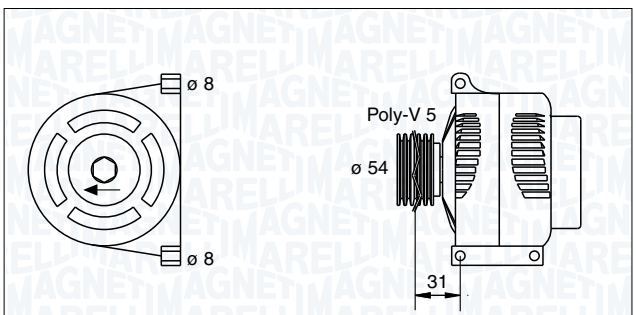

063377426010 MAN7426 120A 12V

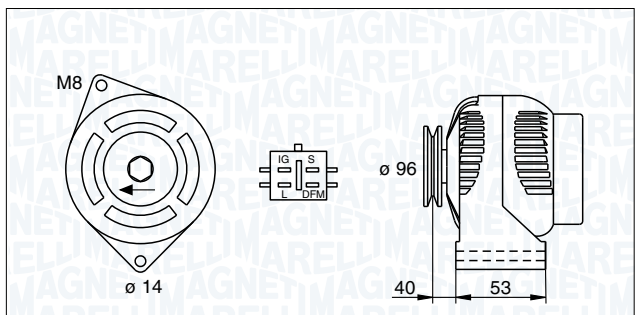

063377427010 MAN7427 120A 12V

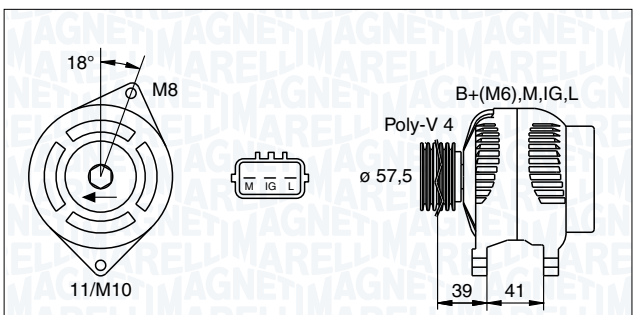

063377428010 MAN7428 80A 12V

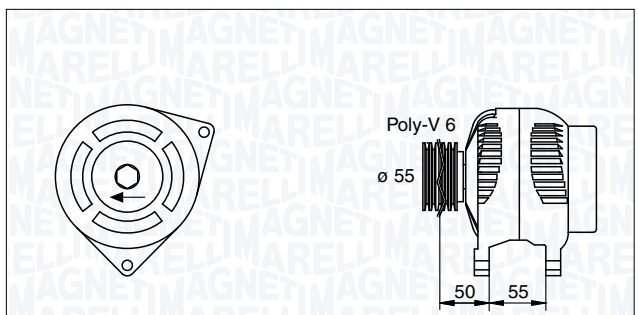

063377429010 MAN7429 70A 12V

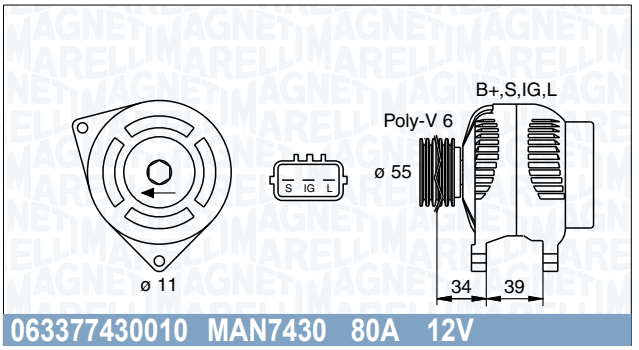

063377430010 MAN7430 80A 12V

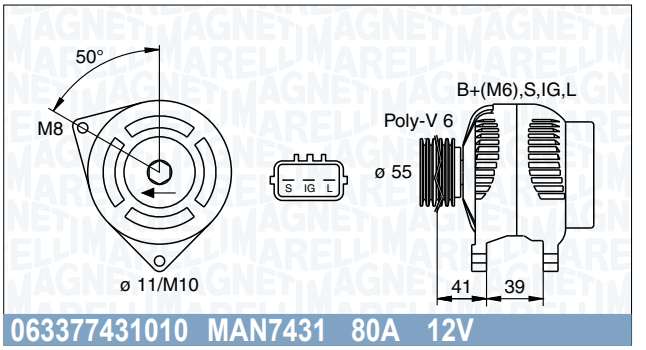

063377431010 MAN7431 80A 12V

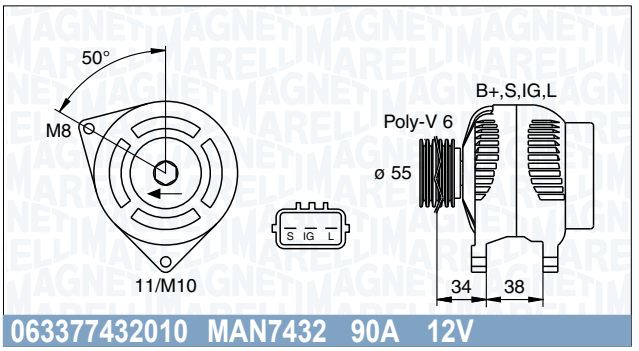

063377432010 MAN7432 90A 12V

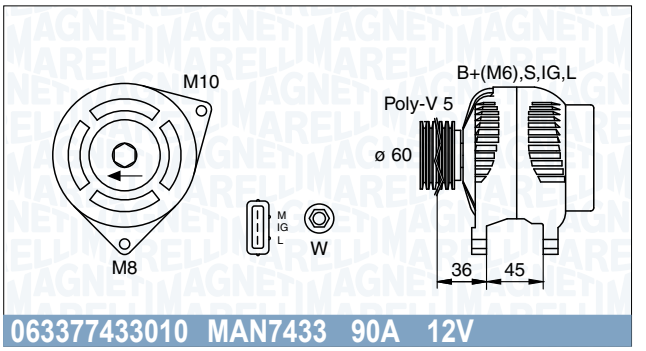

063377433010 MAN7433 90A 12V

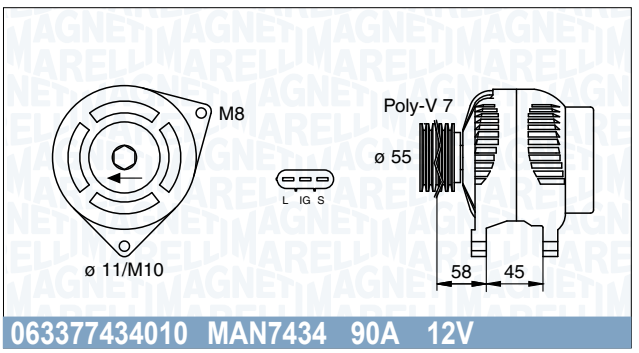

063377434010 MAN7434 90A 12V

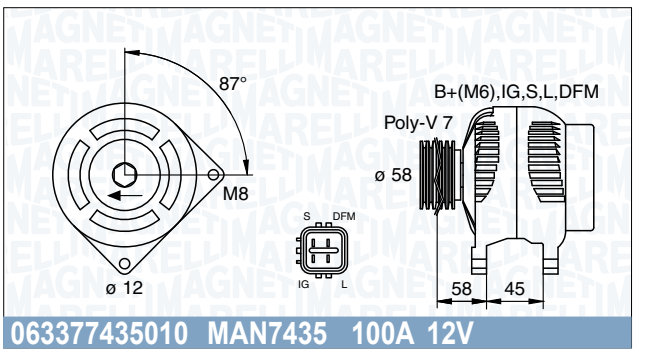

063377435010 MAN7435 100A 12V

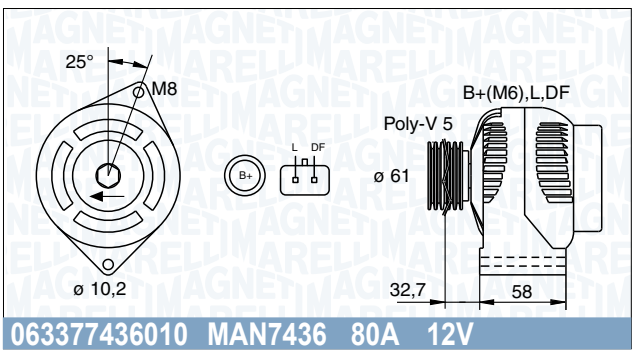

063377436010 MAN7436 80A 12V

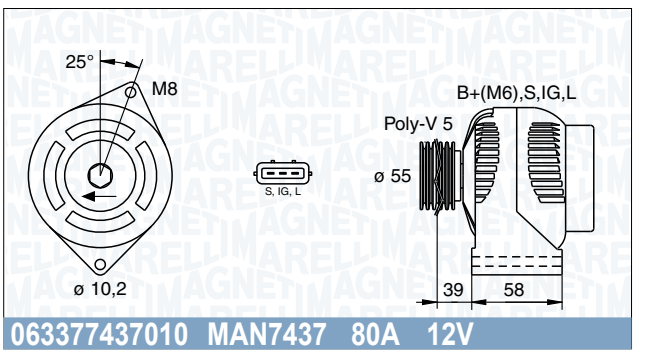

063377437010 MAN7437 80A 12V

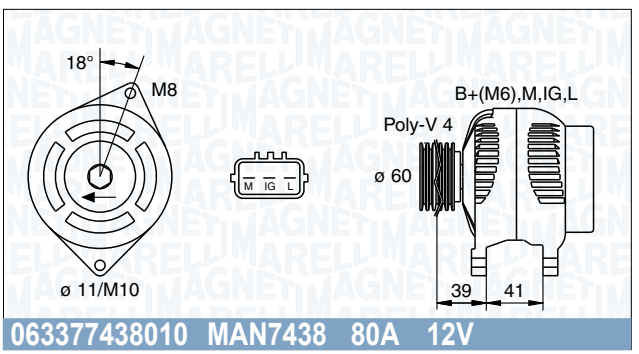

063377438010 MAN7438 80A 12V

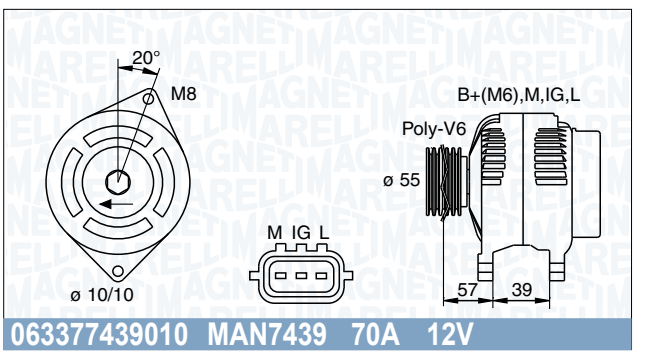

063377439010 MAN7439 70A 12V

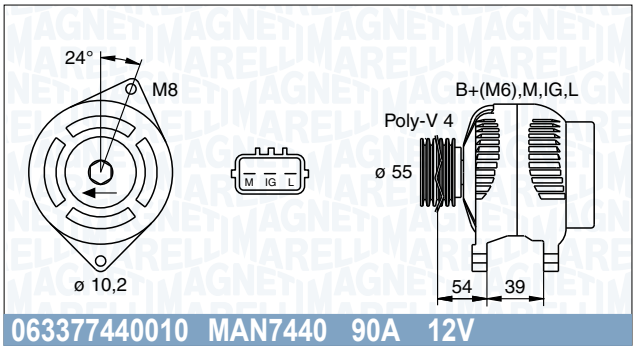

063377440010 MAN7440 90A 12V

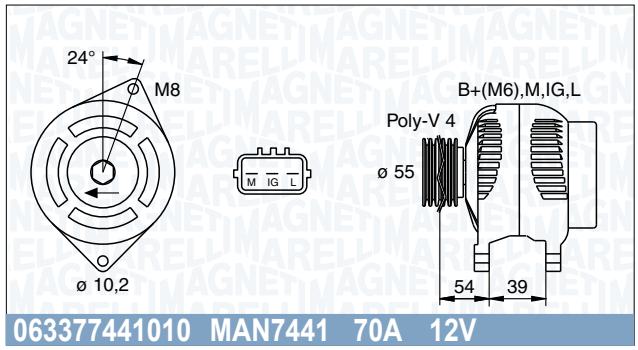

063377441010 MAN7441 70A 12V

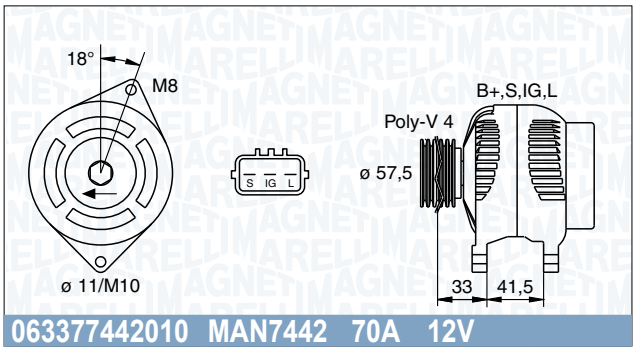

063377442010 MAN7442 70A 12V

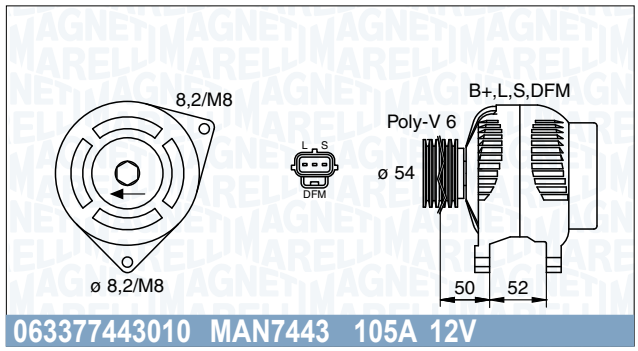

063377443010 MAN7443 105A 12V

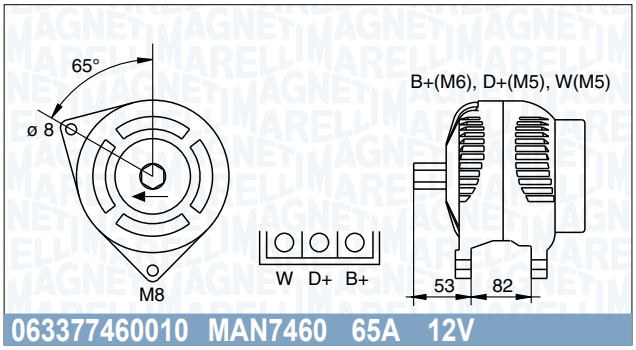

063377460010 MAN7460 65A 12V

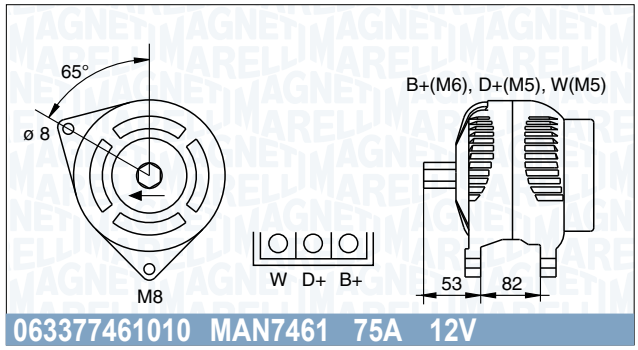

063377461010 MAN7461 75A 12V

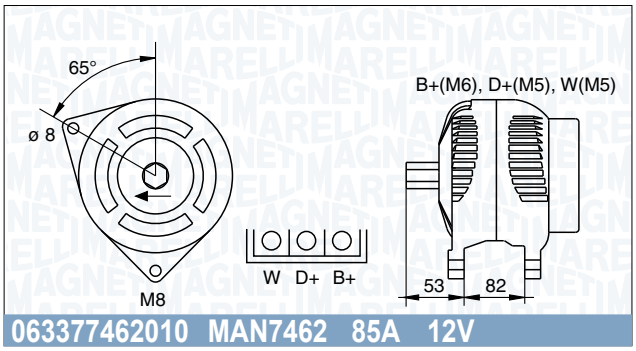

063377462010 MAN7462 85A 12V

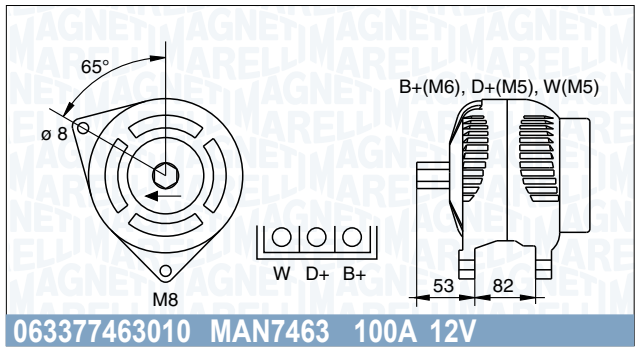

063377463010 MAN7463 100A 12V

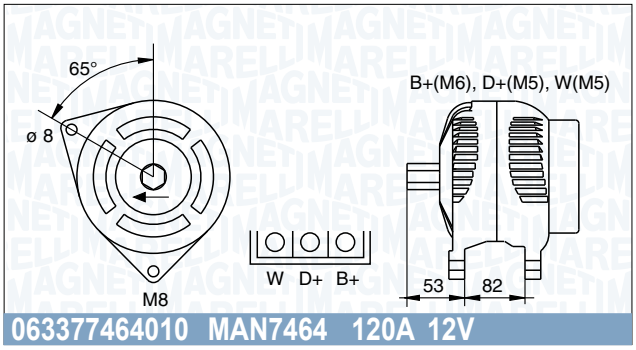

063377464010 MAN7464 120A 12V

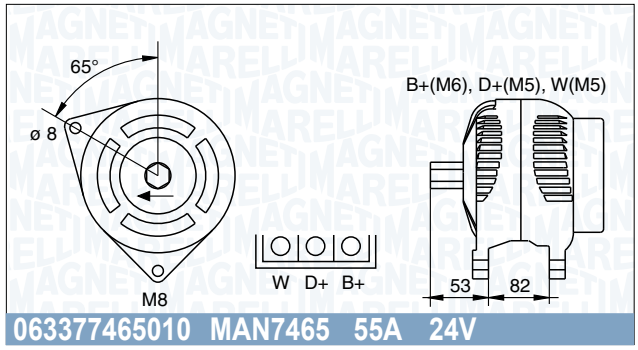

063377465010 MAN7465 55A 24V

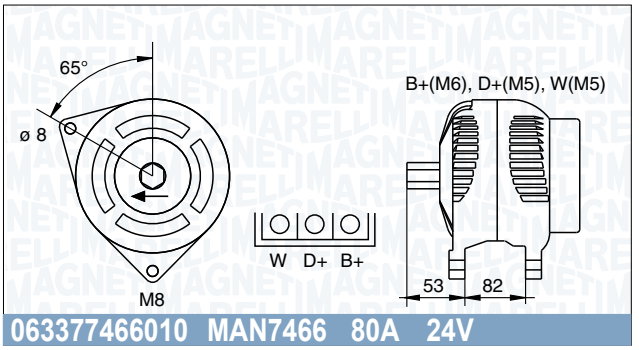

063377466010 MAN7466 80A 24V

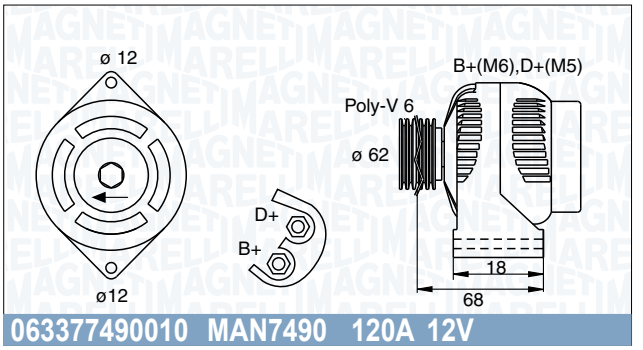

063377490010 MAN7490 120A 12V

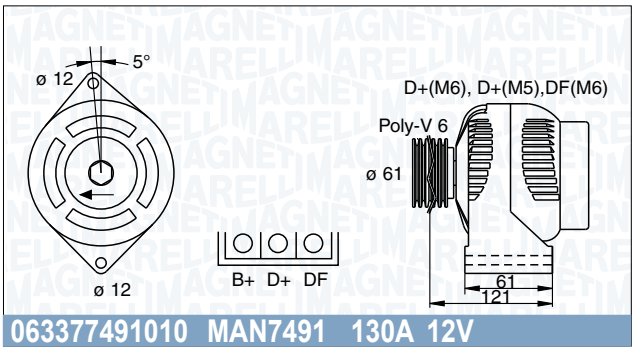

063377491010 MAN7491 130A 12V

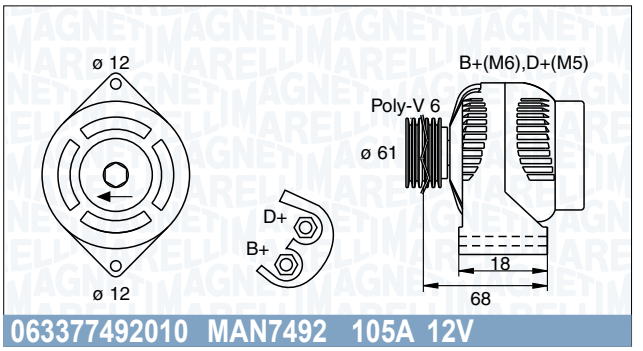

063377492010 MAN7492 105A 12V

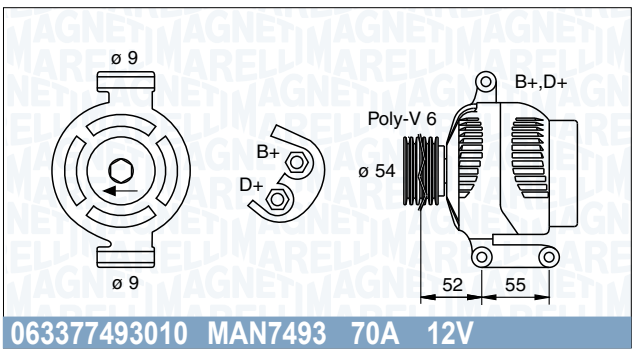

063377493010 MAN7493 70A 12V

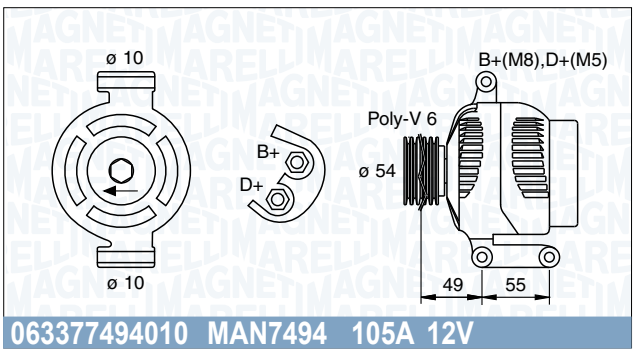

063377494010 MAN7494 105A 12V

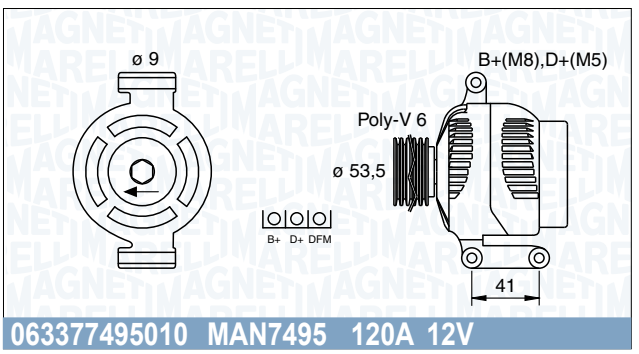

063377495010 MAN7495 120A 12V

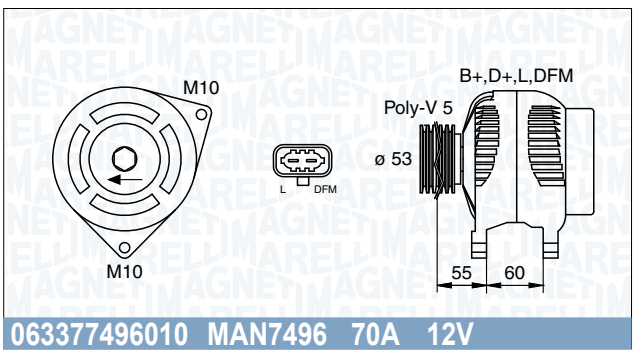

063377496010 MAN7496 70A 12V

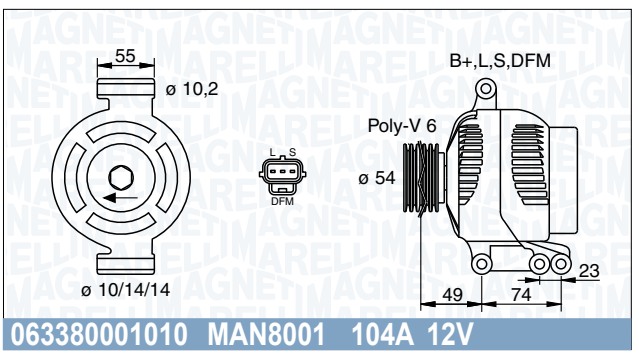

063380001010 MAN8001 104A 12V

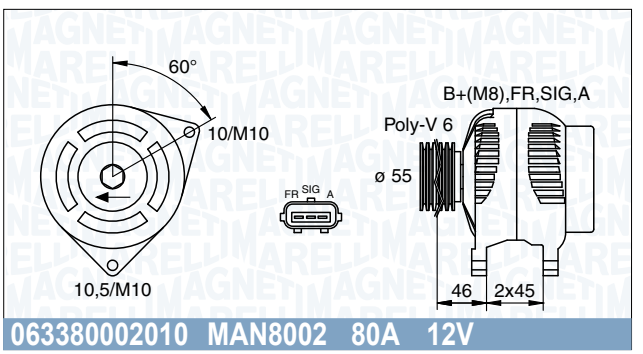

063380002010 MAN8002 80A 12V

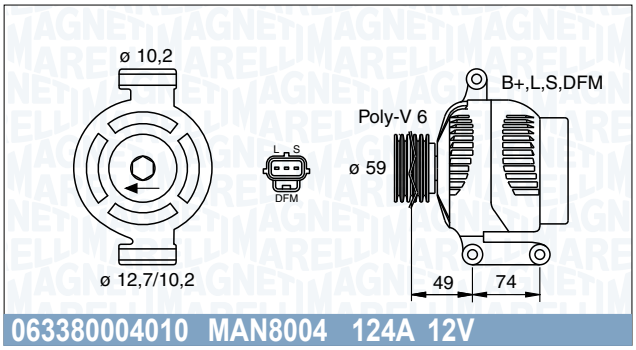

063380004010 MAN8004 124A 12V

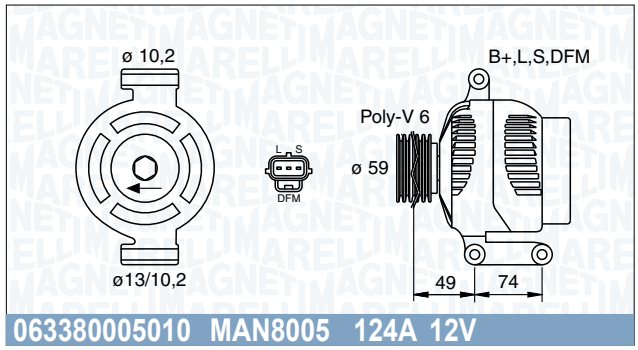

063380005010 MAN8005 124A 12V

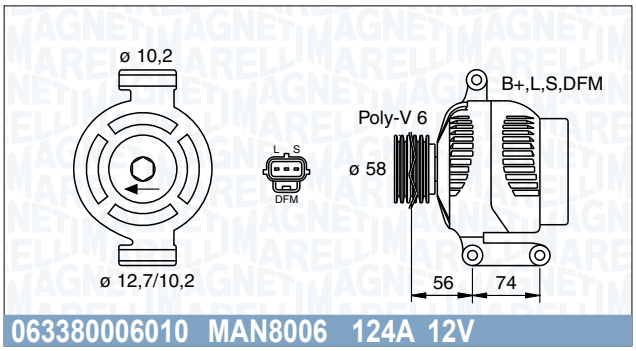

063380006010 MAN8006 124A 12V

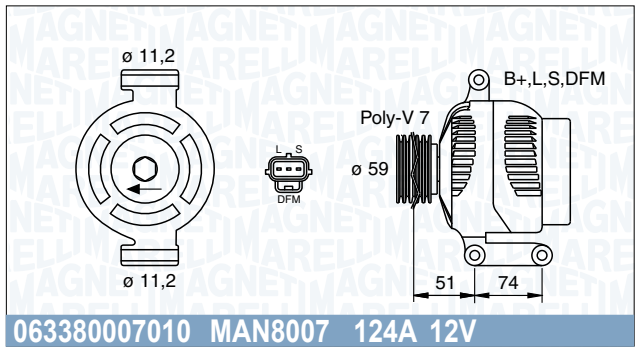

063380007010 MAN8007 124A 12V

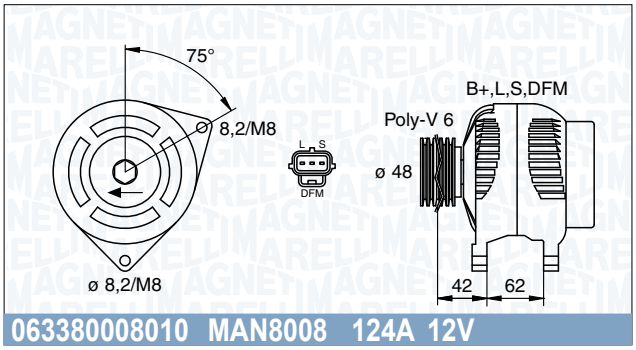

063380008010 MAN8008 124A 12V

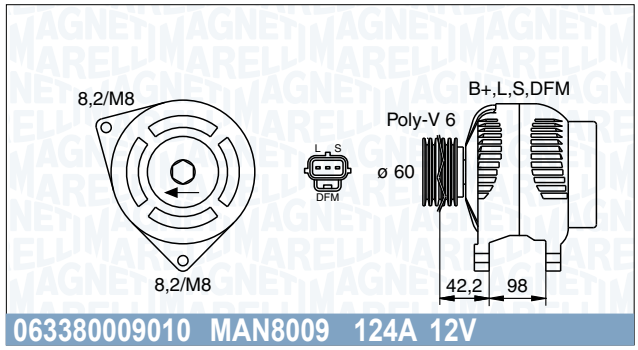

063380009010 MAN8009 124A 12V

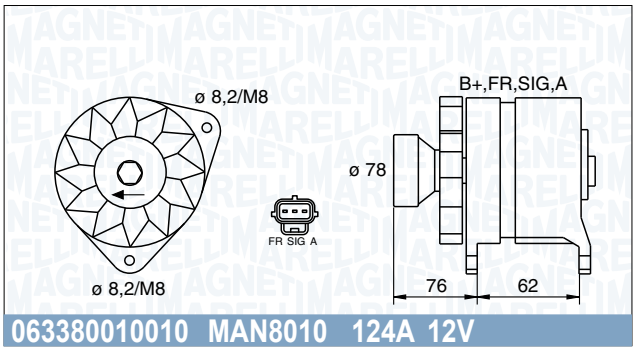

063380010010 MAN8010 124A 12V

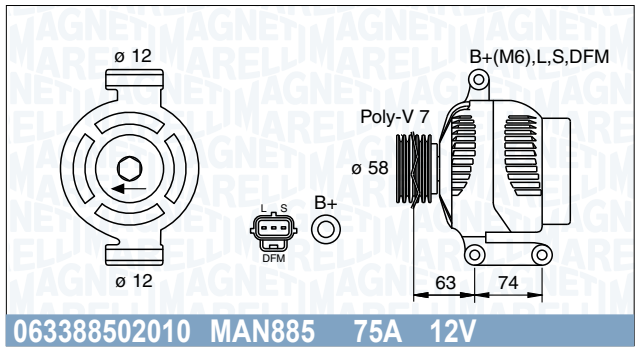

063388502010 MAN885 75A 12V

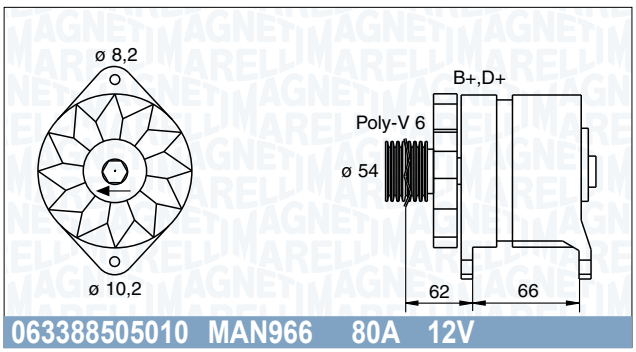

063388505010 MAN966 80A 12V

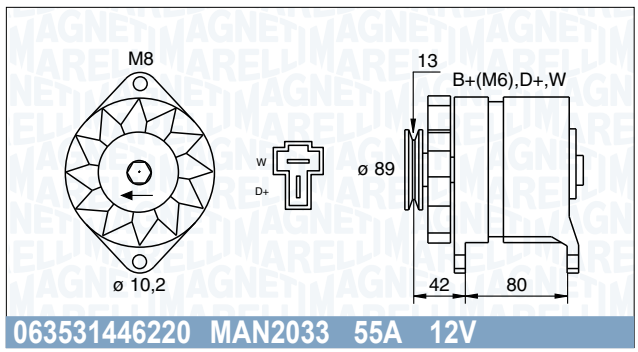

063531446220 MAN2033 55A 12V

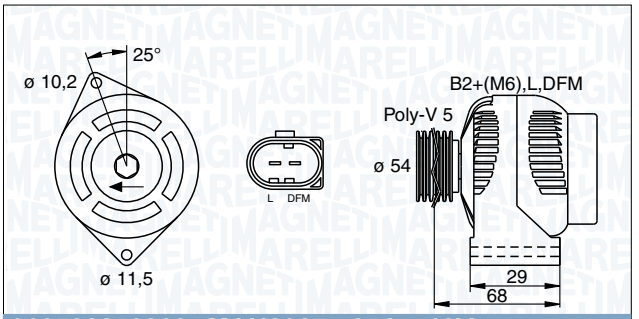

063532250200 MAN2027 85A 12V

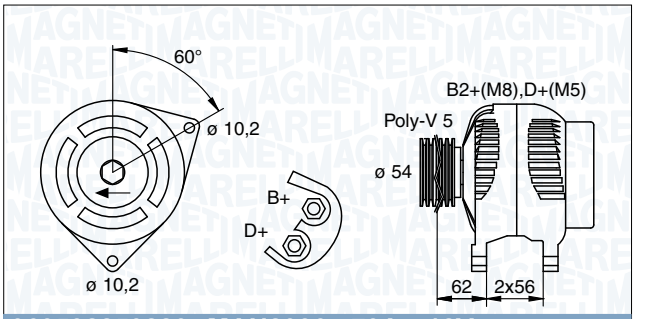

063532250220 MAN2036 70A 12V

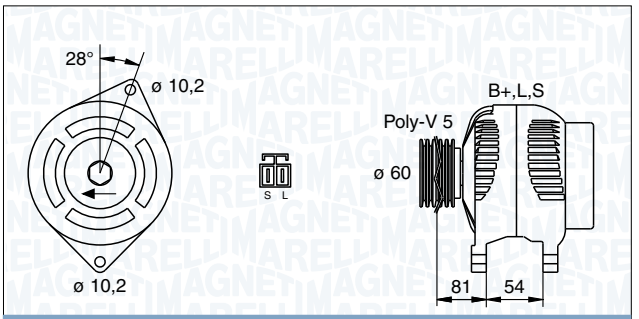

063532601010 MAN2601 110A 12V

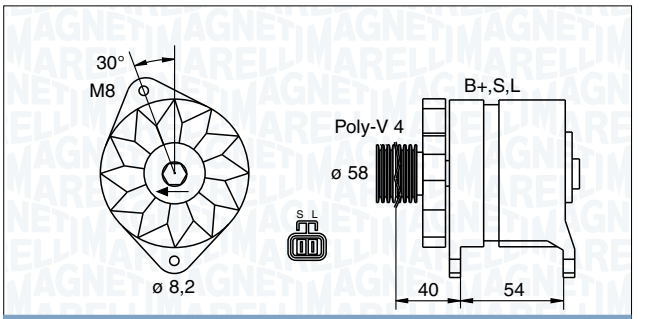

063532602010 MAN2602 90A 12V

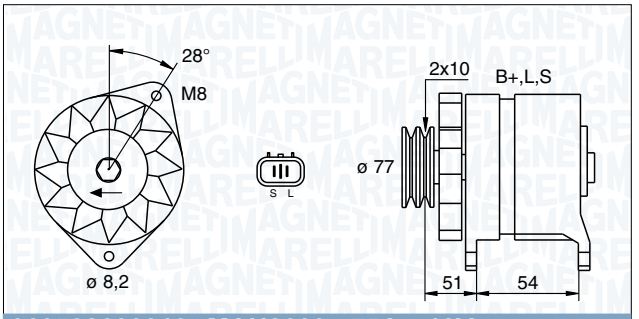

063532603010 MAN2603 75A 12V

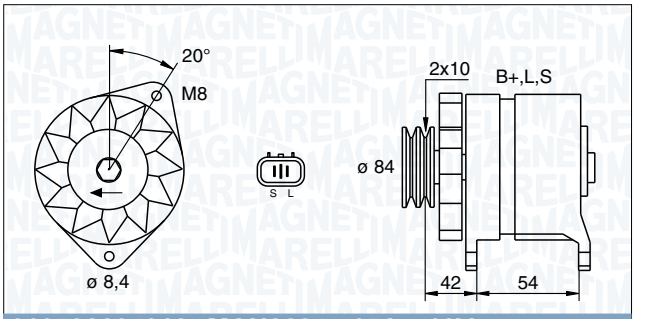

063532604010 MAN2604 65A 12V

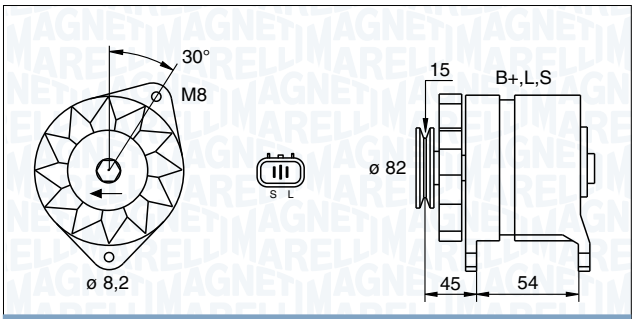

063532605010 MAN2605 65A 12V

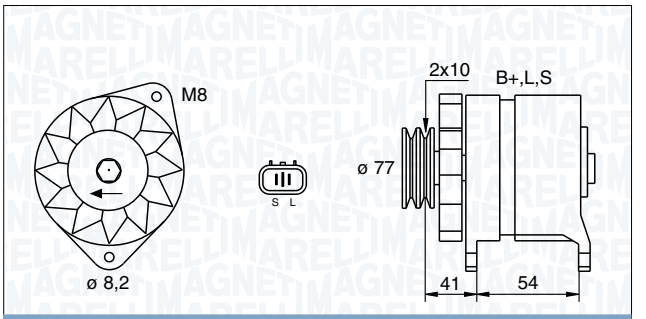

063532606010 MAN2606 90A 12V

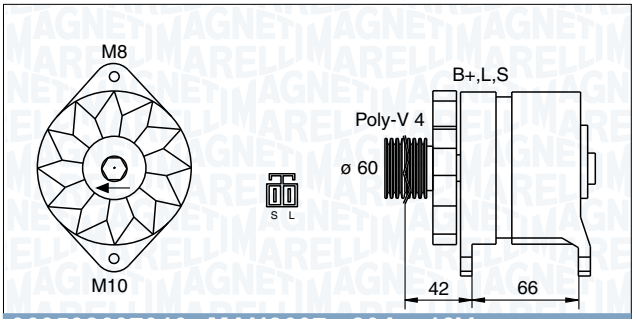

063532607010 MAN2607 80A 12V

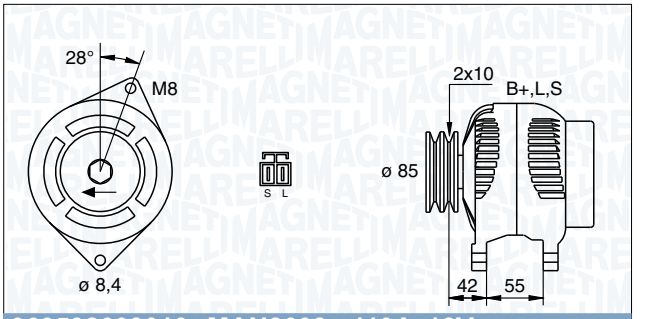

063532608010 MAN2608 110A 12V

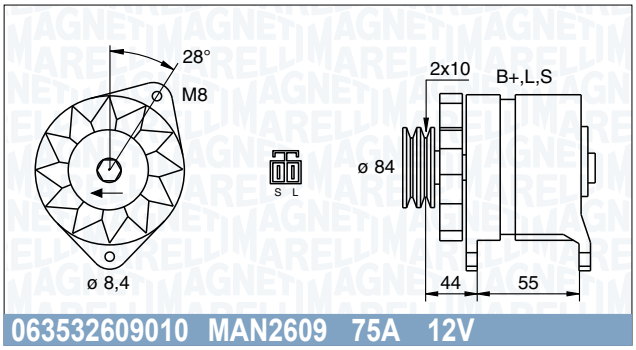

063532609010 MAN2609 75A 12V

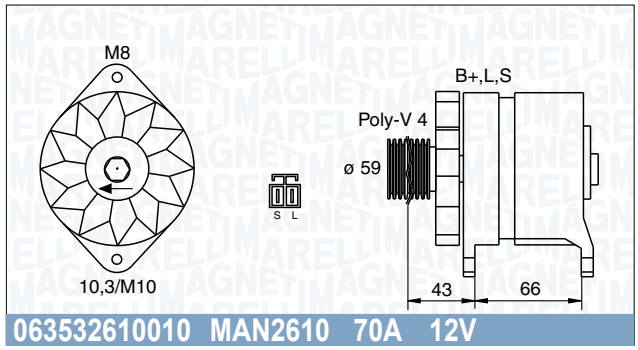

063532610010 MAN2610 70A 12V

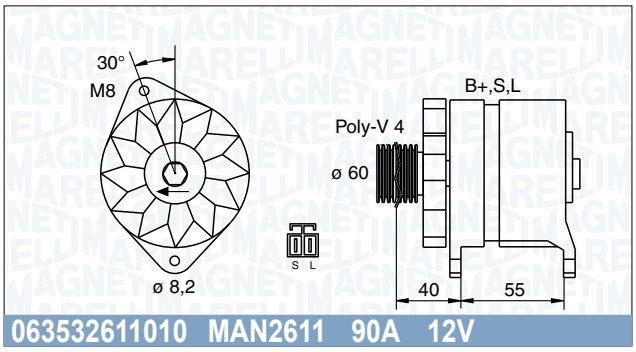

063532611010 MAN2611 90A 12V

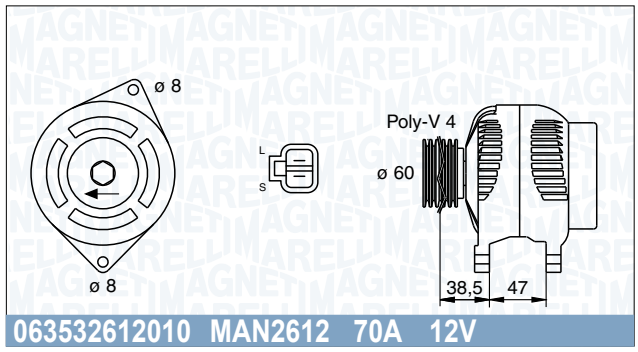

063532612010 MAN2612 70A 12V

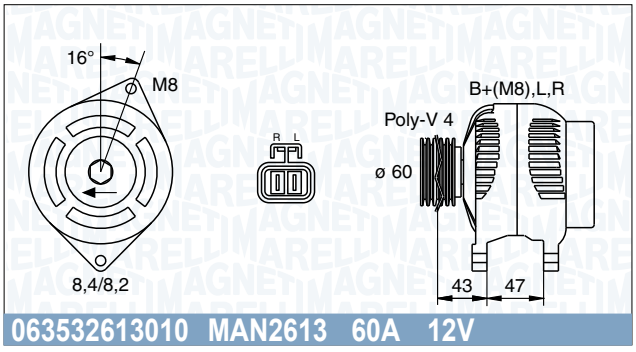

063532613010 MAN2613 60A 12V

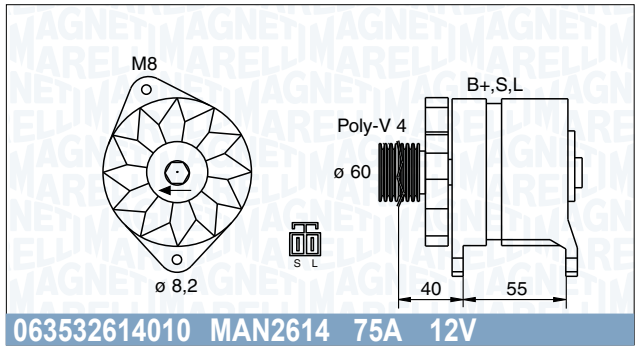

063532614010 MAN2614 75A 12V

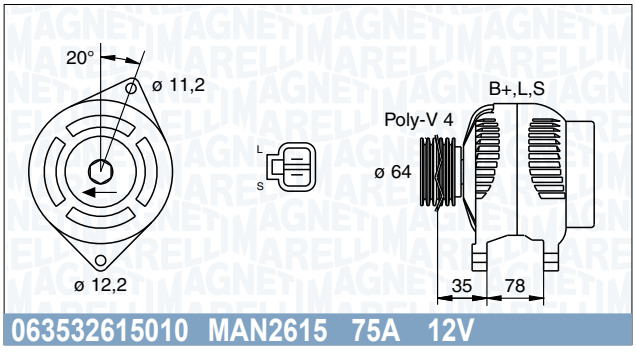

063532615010 MAN2615 75A 12V

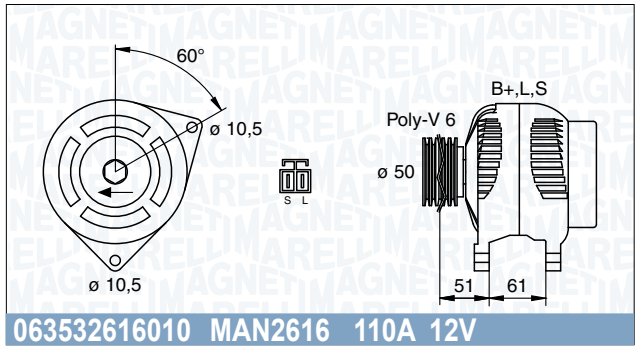

063532616010 MAN2616 110A 12V

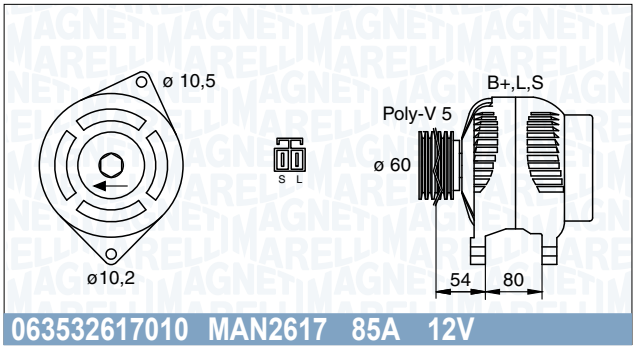

063532617010 MAN2617 85A 12V

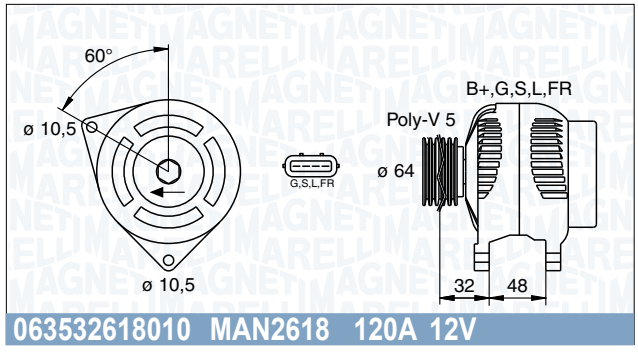

063532618010 MAN2618 120A 12V

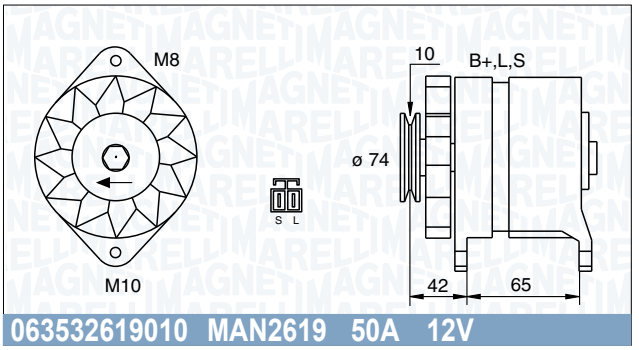

063532619010 MAN2619 50A 12V

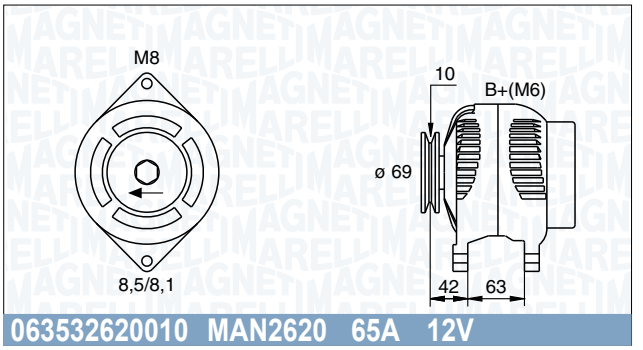

063532620010 MAN2620 65A 12V

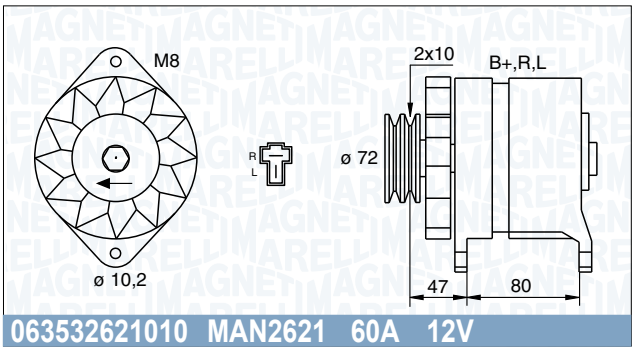

063532621010 MAN2621 60A 12V

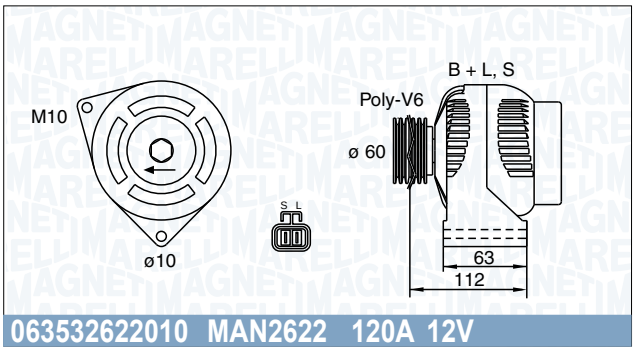

063532622010 MAN2622 120A 12V

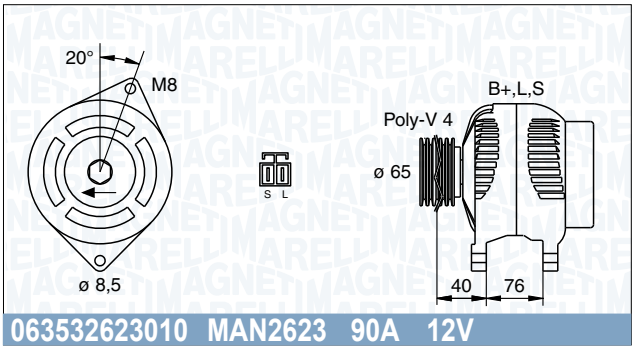

063532623010 MAN2623 90A 12V

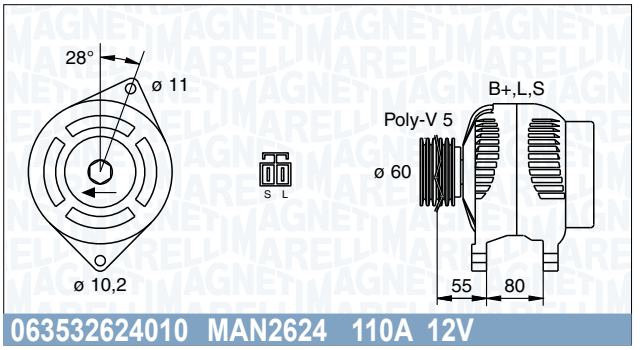

063532624010 MAN2624 110A 12V

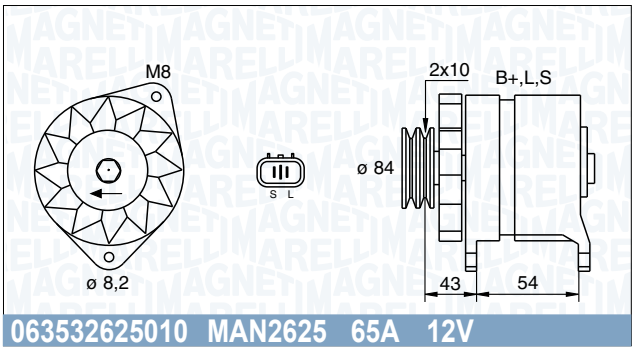

063532625010 MAN2625 65A 12V

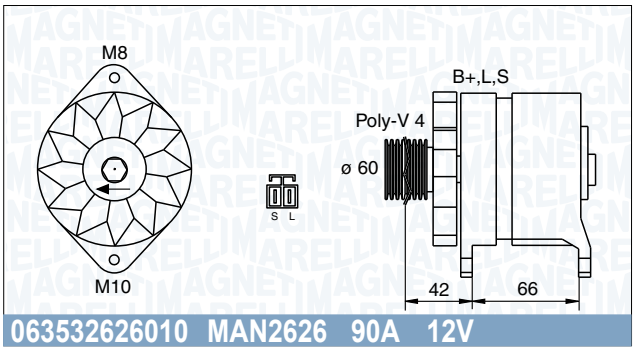

063532626010 MAN2626 90A 12V

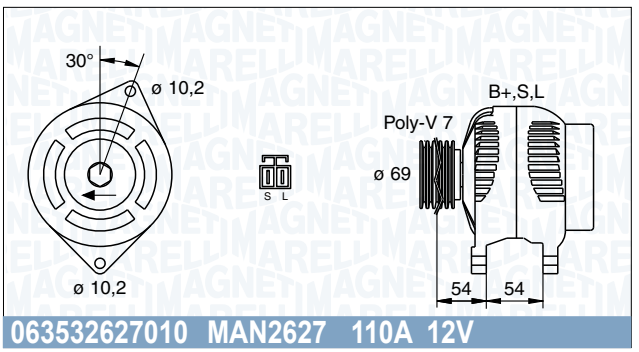

063532627010 MAN2627 110A 12V

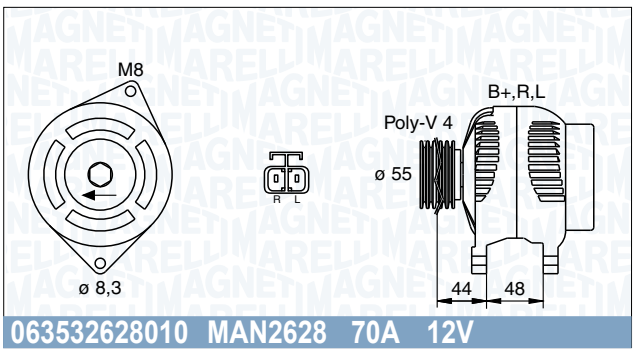

063532628010 MAN2628 70A 12V

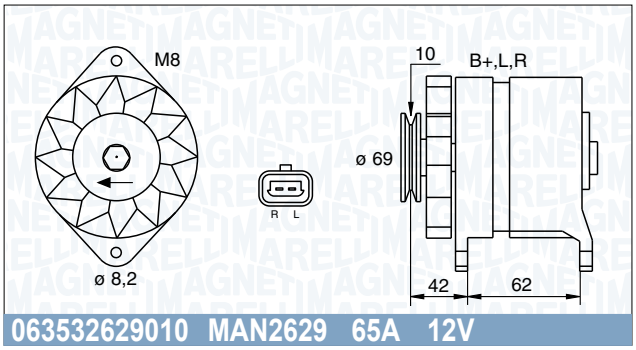

063532629010 MAN2629 65A 12V

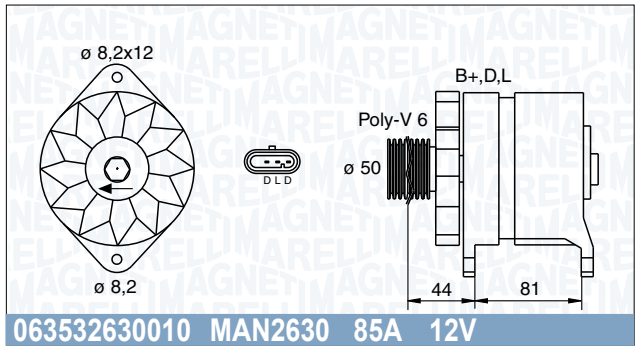

063532630010 MAN2630 85A 12V

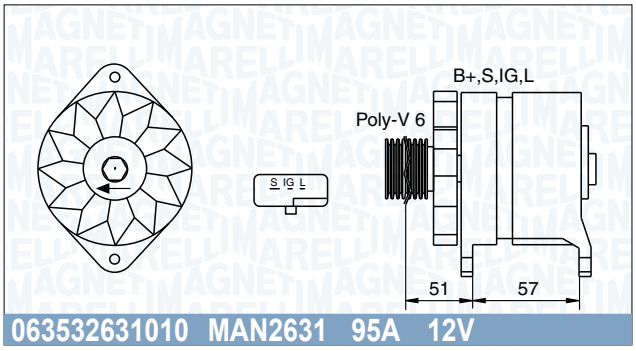

063532631010 MAN2631 95A 12V

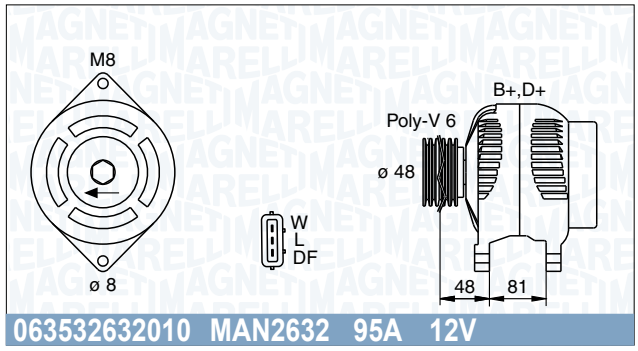

063532632010 MAN2632 95A 12V

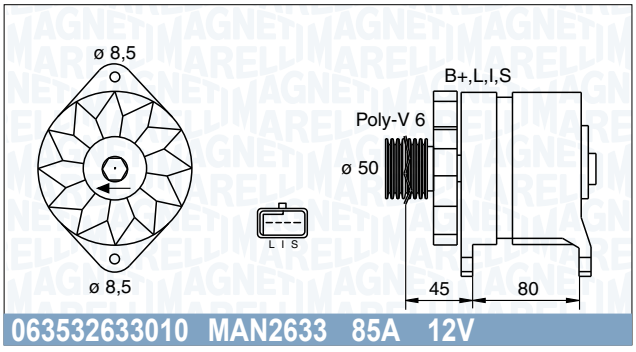

063532633010 MAN2633 85A 12V

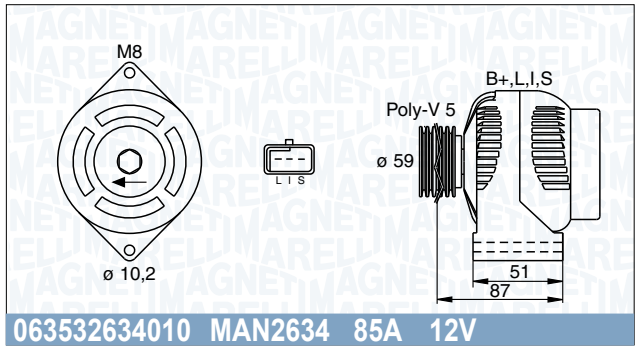

063532634010 MAN2634 85A 12V

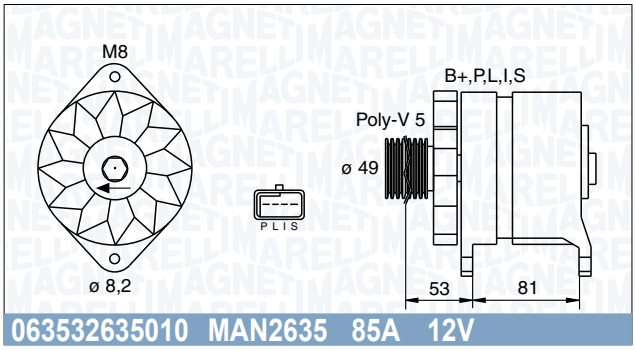

063532635010 MAN2635 85A 12V

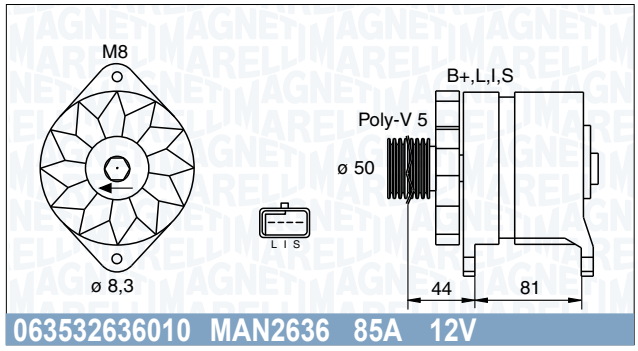

063532636010 MAN2636 85A 12V

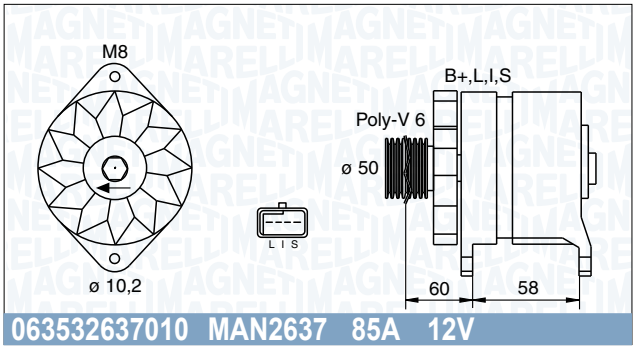

063532637010 MAN2637 85A 12V

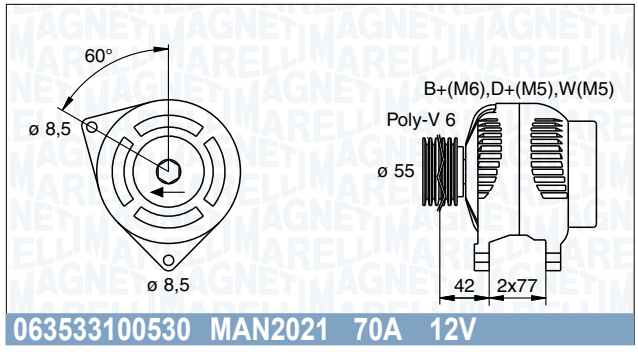

063533100530 MAN2021 70A 12V

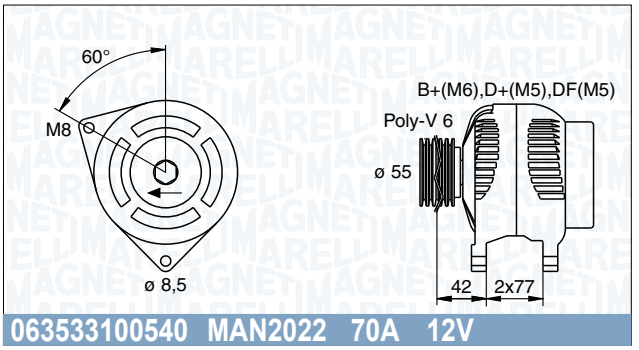

063533100540 MAN2022 70A 12V

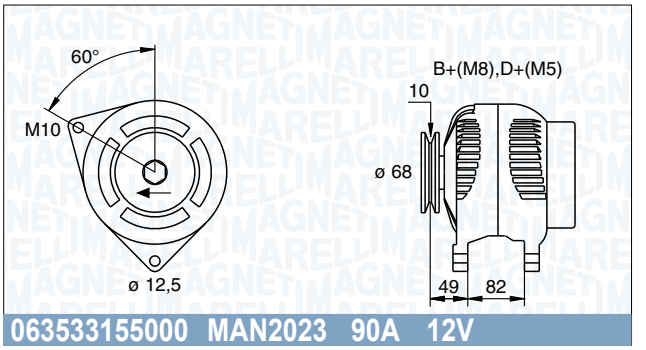

063533155000 MAN2023 90A 12V

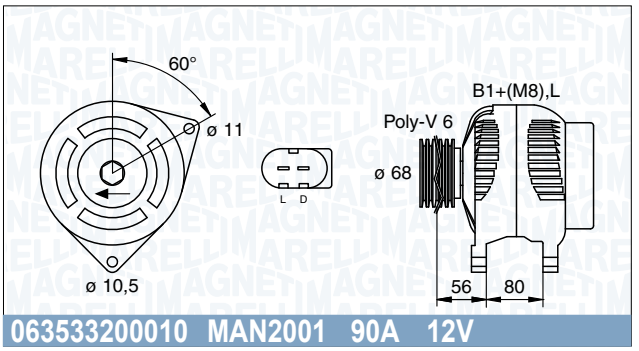

063533200010 MAN2001 90A 12V

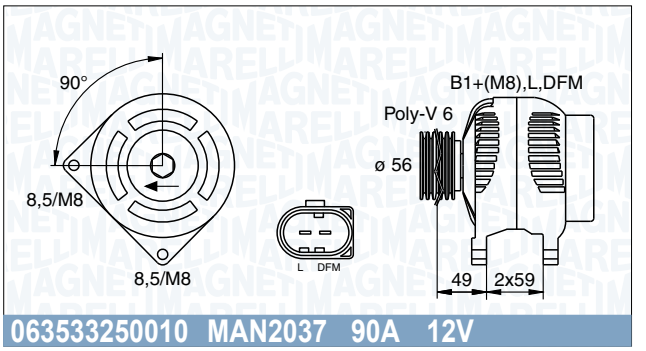

063533250010 MAN2037 90A 12V

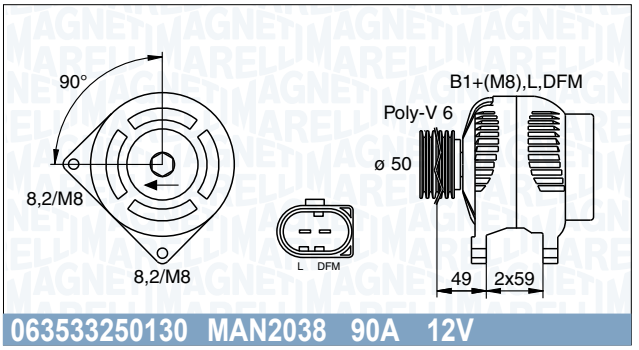

063533250130 MAN2038 90A 12V

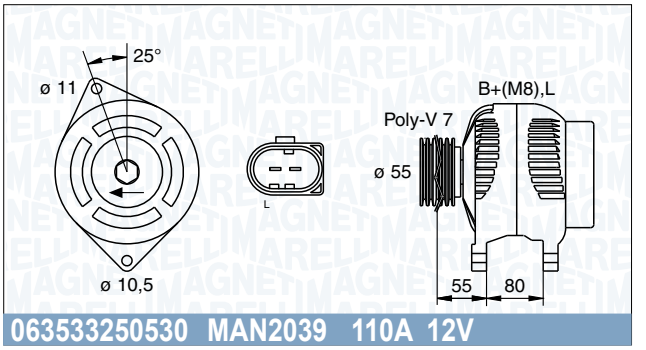

063533250530 MAN2039 110A 12V

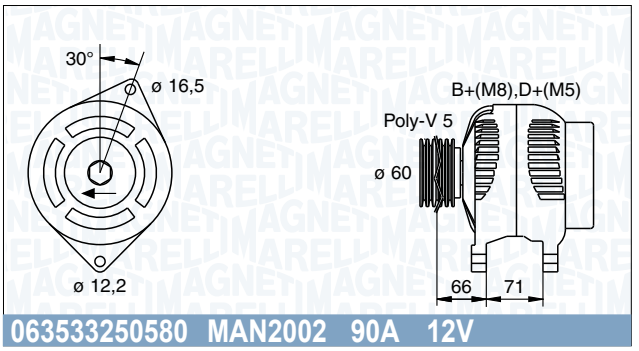

063533250580 MAN2002 90A 12V

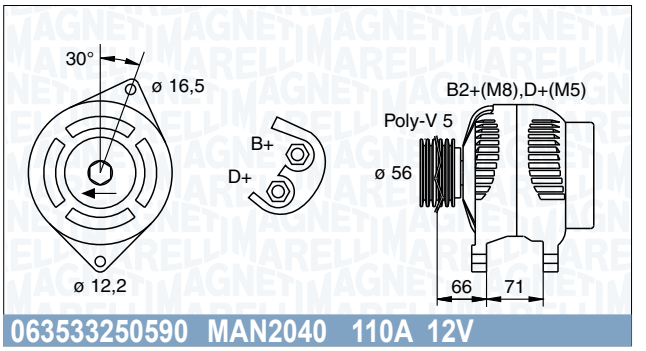

063533250590 MAN2040 110A 12V

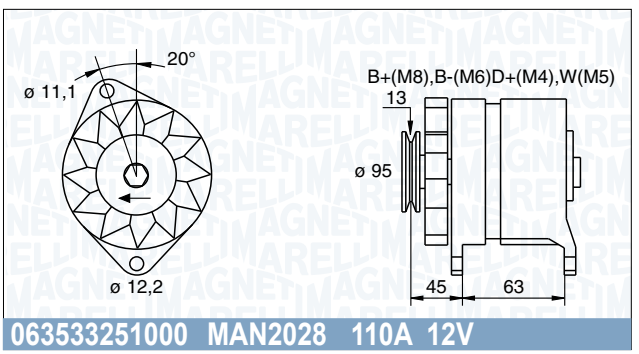

063533251000 MAN2028 110A 12V

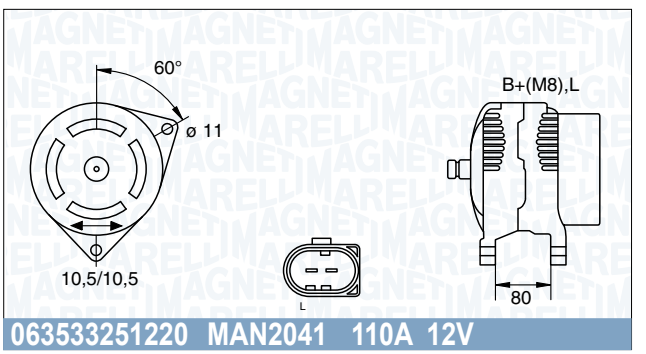

063533251220 MAN2041 110A 12V

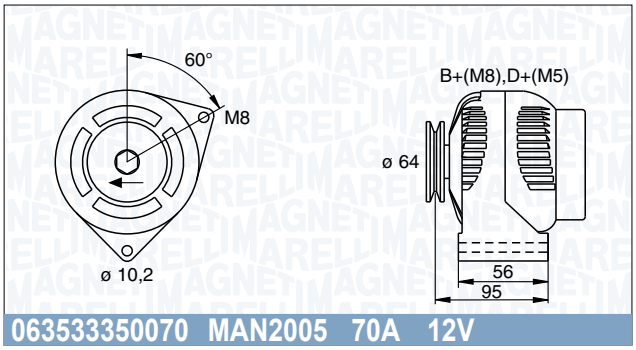

063533350070 MAN2005 70A 12V

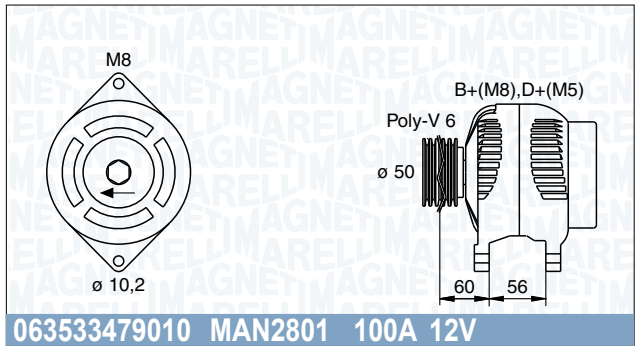

063533479010 MAN2801 100A 12V

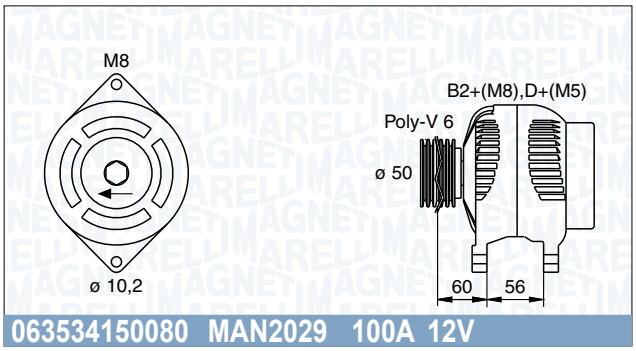

063534150080 MAN2029 100A 12V

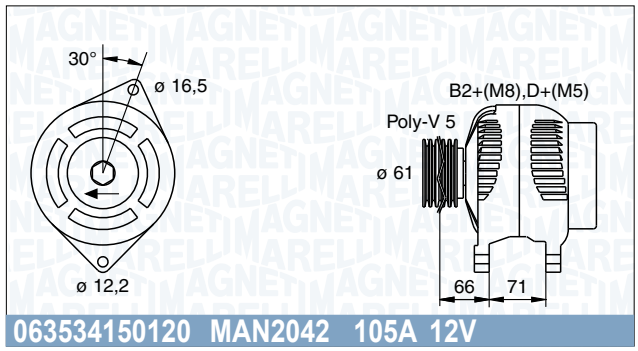

063534150120 MAN2042 105A 12V

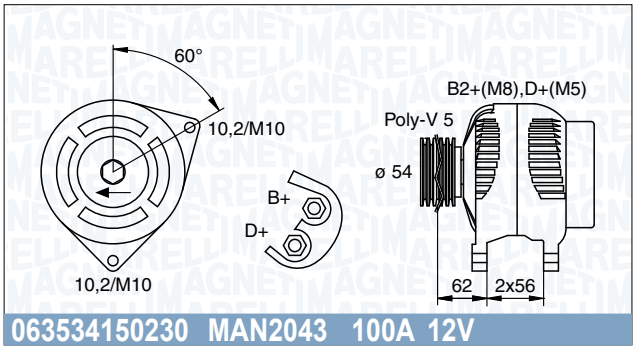

063534150230 MAN2043 100A 12V

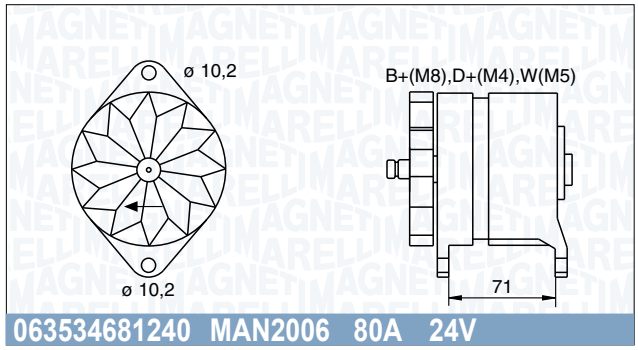

063534681240 MAN2006 80A 24V

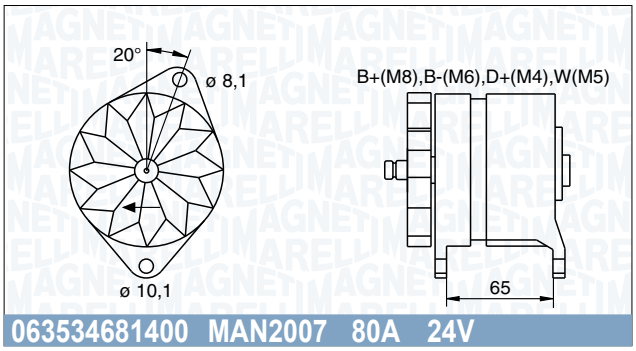

063534681400 MAN2007 80A 24V

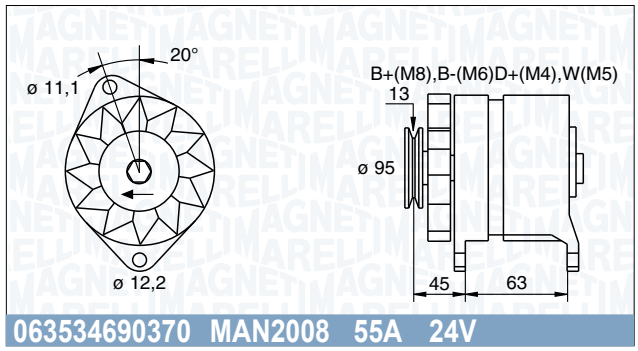

063534690370 MAN2008 55A 24V

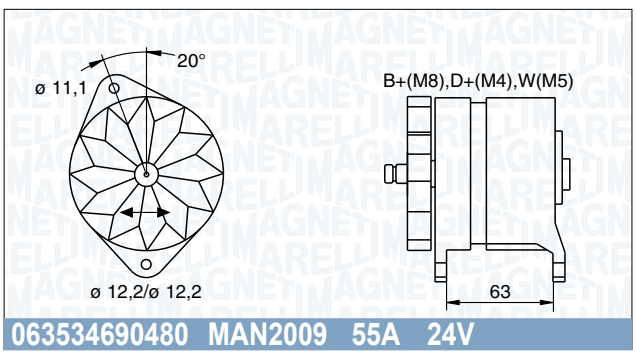

063534690480 MAN2009 55A 24V

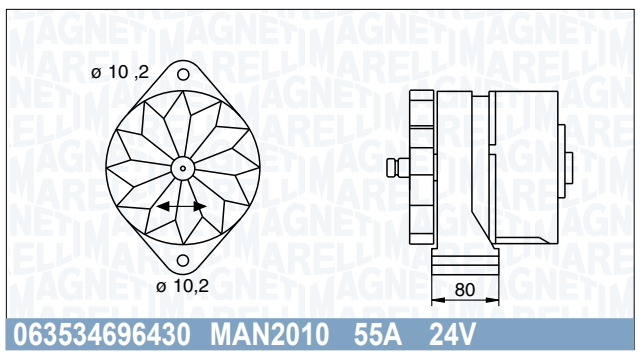

063534696430 MAN2010 55A 24V

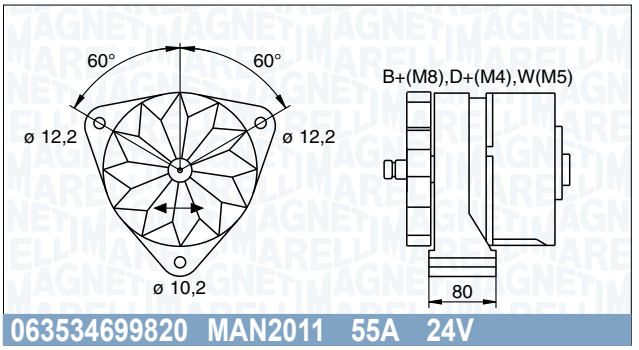

063534699820 MAN2011 55A 24V

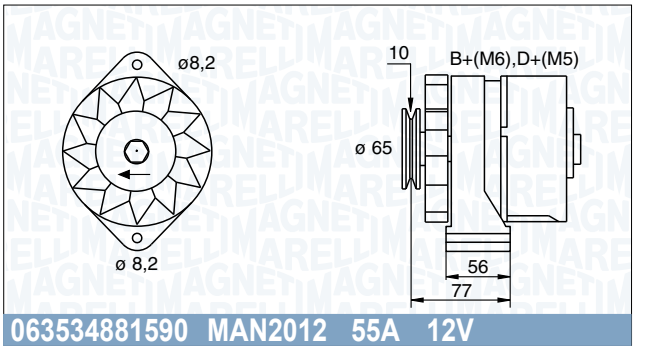

063534881590 MAN2012 55A 12V

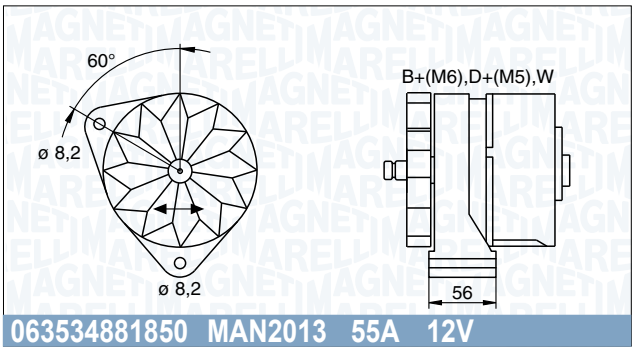

063534881850 MAN2013 55A 12V

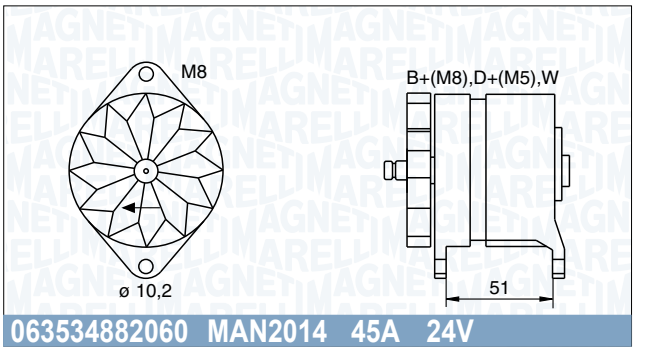

063534882060 MAN2014 45A 24V

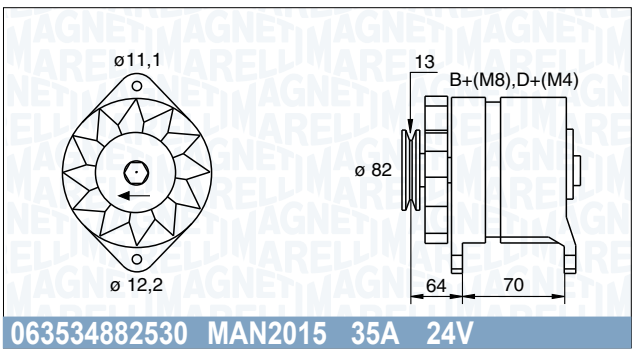

063534882530 MAN2015 35A 24V

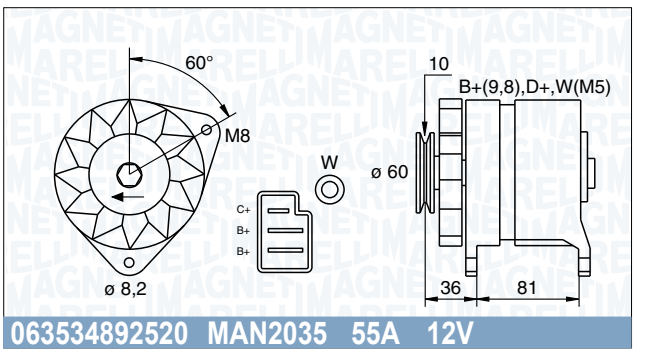

063534892520 MAN2035 55A 12V

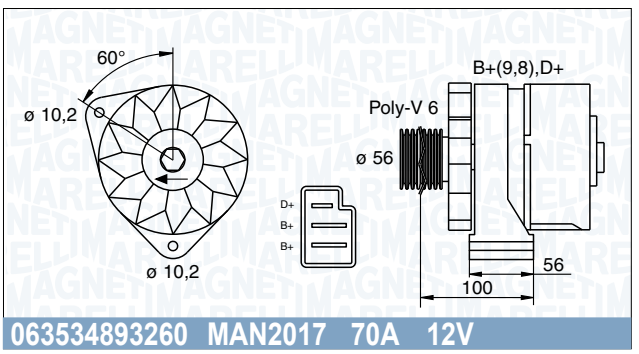

063534893260 MAN2017 70A 12V

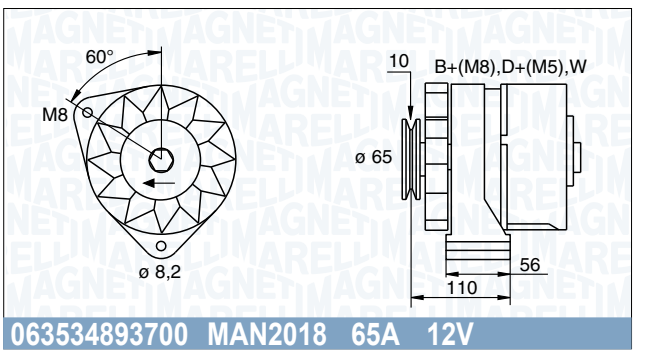

063534893700 MAN2018 65A 12V

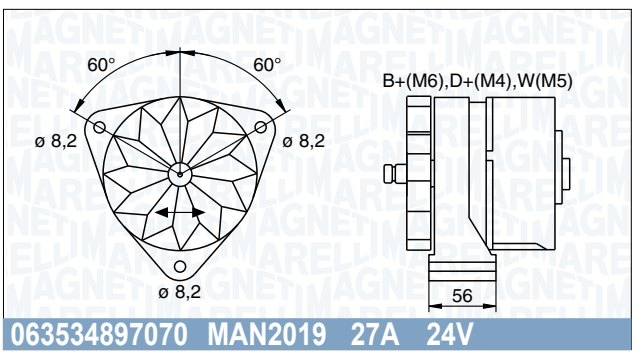

063534897070 MAN2019 27A 24V

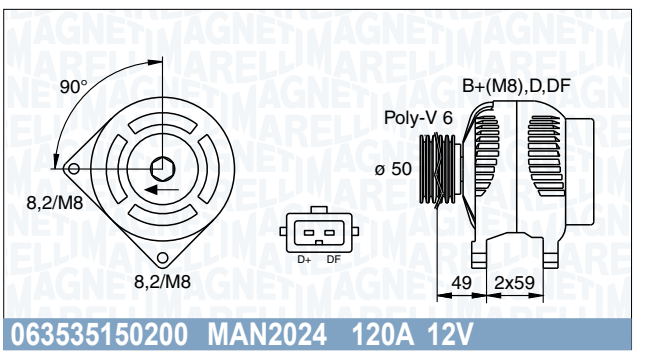

063535150200 MAN2024 120A 12V

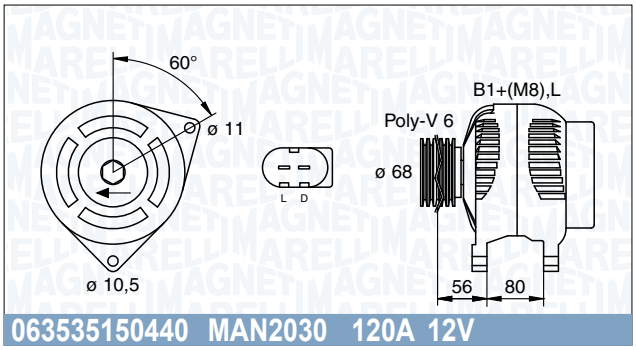

063535150440 MAN2030 120A 12V

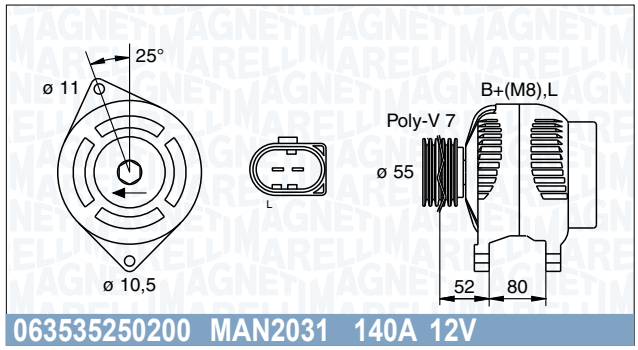

063535250200 MAN2031 140A 12V

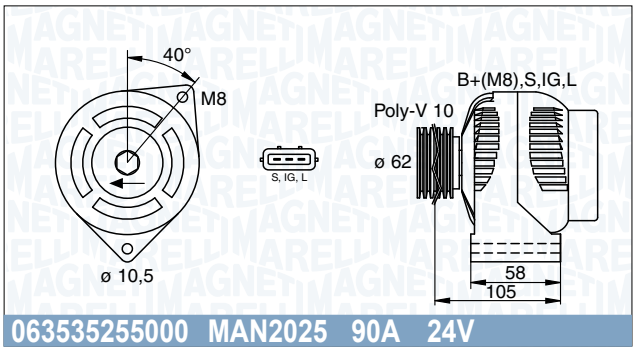

063535255000 MAN2025 90A 24V

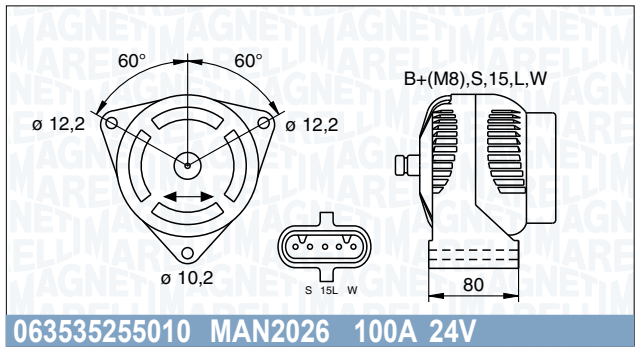

063535255010 MAN2026 100A 24V

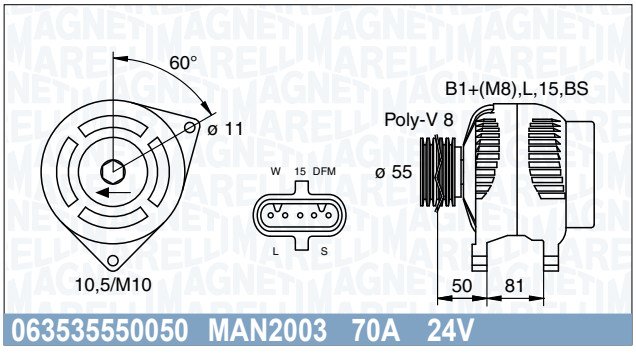

063535550050 MAN2003 70A 24V

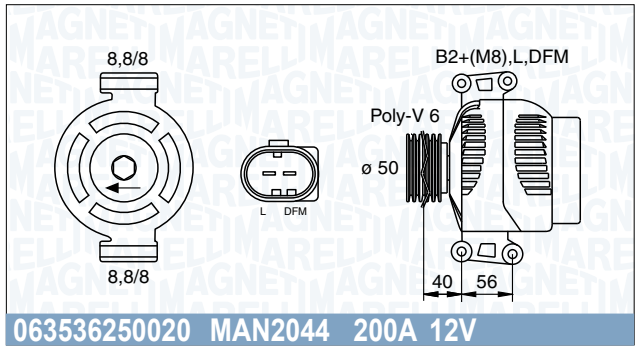

063536250020 MAN2044 200A 12V

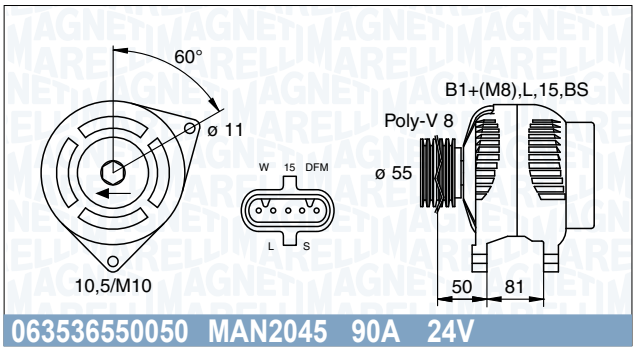

063536550050 MAN2045 90A 24V

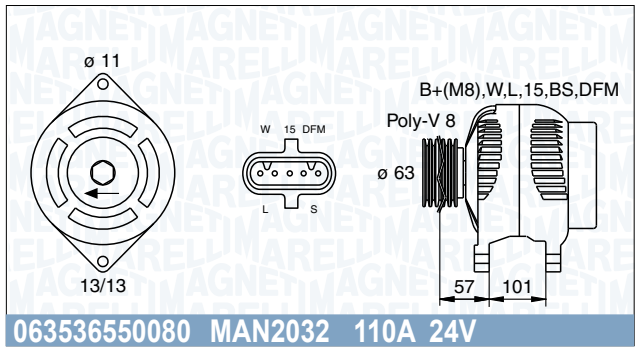

063536550080 MAN2032 110A 24V

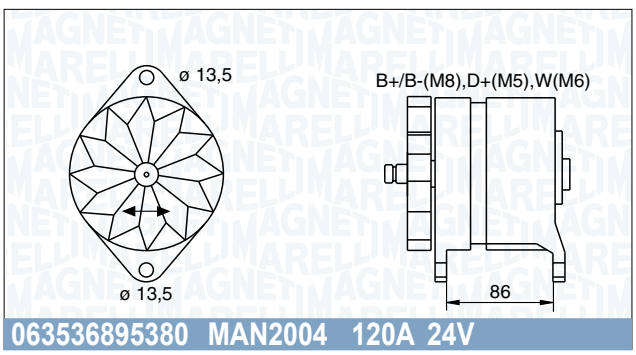

063536895380 MAN2004 120A 24V

Tavole di comparazione
cross reference guide
Gegenüberstellung Cross-Referenzen
Table de correspondance
Tabla de equivalencias
Tabelas de equivalências
Πίνακας αντιστοιχιών
Tabela porównawcza
Кросс-таблица
çapraz referans tablosu

CROSS REFERENCE	MAGNETI MARELLI	
	LONG	SHORT
AGCO		
83632800	054022656010	**MAN766**
ASHIKA		
002-201100	063532635010	**MAN2635**
002-201104	063532631010	**MAN2631**
002-201105	063532637010	**MAN2637**
002-201107	063532631010	**MAN2631**
002-201110	063532630010	**MAN2630**
002-201112	063532633010	**MAN2633**
002-C949	063532615010	**MAN2615**
002-C952	063532623010	**MAN2623**
002-C967	063532605010	**MAN2605**
002-C976	063532609010	**MAN2609**
002-C979	063532622010	**MAN2622**
002-C981	063532625010	**MAN2625**
002-M942	063532619010	**MAN2619**
002-M952	063532624010	**MAN2624**
002-M954	063532627010	**MAN2627**
BOSCH		
9120143203	063341454010	**MAN1014**
9120143204	063341454010	**MAN1014**
9120144228	063341454010	**MAN1014**
9120144229	063341454010	**MAN1014**
9120144240	063341454010	**MAN1014**
9120144241	063341454010	**MAN1014**
9120144622	063531446220	**MAN2033**
9120331520	063341454010	**MAN1014**
9120331524	063341454010	**MAN1014**
0 120 046 985	063321191010	**MAN330**
0 120 048 818	054022384010	**MAN653**
0 120 048 825	063321019010	**MAN274**
0 120 048 828	063321044010	**MAN286**
0 120 048 915	063321019010	**MAN274**
0 120 048 921	063321019010	**MAN274**
0 120 048 927	063321062010	**MAN298**
0 120 048 927	063321152010	**MAN327**
0 120 048 932	063534893260	**MAN2017**
0 120 048 933	063321044010	**MAN286**
0 120 335 007	063533350070	**MAN2005**
0 120 468 065	063534681240	**MAN2006**
0 120 468 094	063534681240	**MAN2006**
0 120 468 116	063534681240	**MAN2006**
0 120 468 124	063534681240	**MAN2006**
0 120 468 130	063534681240	**MAN2006**
0 120 468 140	063534681400	**MAN2007**
0 120 468 154	063534681400	**MAN2007**

CROSS REFERENCE	MAGNETI MARELLI	
	LONG	SHORT
BOSCH		
0 120 469 001	063534699820	**MAN2011**
0 120 469 010	063534690480	**MAN2009**
0 120 469 025	063534699820	**MAN2011**
0 120 469 037	063534690370	**MAN2008**
0 120 469 048	063534690480	**MAN2009**
0 120 469 101	063534699820	**MAN2011**
0 120 469 643	063534696430	**MAN2010**
0 120 469 781	054022585010	**MAN652**
0 120 469 807	063534696430	**MAN2010**
0 120 469 860	063321395010	**MAN782**
0 120 469 875	063321395010	**MAN782**
0 120 469 939	063321191010	**MAN330**
0 120 469 959	063534696430	**MAN2010**
0 120 469 979	063321395010	**MAN782**
0 120 469 982	063534699820	**MAN2011**
0 120 485 029	054022585010	**MAN652**
0 120 488 114	063534881850	**MAN2013**
0 120 488 159	063534881590	**MAN2012**
0 120 488 185	063534881850	**MAN2013**
0 120 488 206	063534882060	**MAN2014**
0 120 488 209	063534881850	**MAN2013**
0 120 488 224	063534897070	**MAN2019**
0 120 488 252	063534882530	**MAN2015**
0 120 488 253	063534882530	**MAN2015**
0 120 488 287	063321017010	**MAN352**
0 120 488 294	063534882060	**MAN2014**
0 120 489 035	063321617010	**MAN809**
0 120 489 093	054022581010	**MAN649**
0 120 489 106	063321042010	**MAN283**
0 120 489 107	063321041010	**MAN284**
0 120 489 118	063321154010	**MAN344**
0 120 489 134	063321112010	**MAN379**
0 120 489 134	063321409010	**MAN909**
0 120 489 135	063321112010	**MAN379**
0 120 489 135	063321011010	**MAN349**
0 120 489 146	063321041010	**MAN284**
0 120 489 172	054022581010	**MAN649**
0 120 489 251	054022598010	**MAN666**
0 120 489 252	054022598010	**MAN666**
0 120 489 347	054022604010	**MAN662**
0 120 489 369	063534893700	**MAN2018**
0 120 489 370	063534893700	**MAN2018**
0 120 489 384	054022656010	**MAN766**
0 120 489 402	063321011010	**MAN349**
0 120 489 410	063320060010	**MAN772**

CROSS REFERENCE	MAGNETI MARELLI	
	LONG	SHORT
BOSCH		
0 120 489 410	063304087010	**MAN873**
0 120 489 426	054022598010	**MAN666**
0 120 489 426	054022581010	**MAN649**
0 120 489 481	063534882060	**MAN2014**
0 120 489 541	063321011010	**MAN349**
0 120 489 542	063321011010	**MAN349**
0 120 489 707	063534897070	**MAN2019**
0 120 489 730	063534897070	**MAN2019**
0 120 489 742	063321011010	**MAN349**
0 120 689 538	063536895380	**MAN2004**
0 123 310 053	063533100530	**MAN2021**
0 123 310 054	063533100540	**MAN2022**
0 123 315 500	063533155000	**MAN2023**
0 123 515 020	063535150200	**MAN2024**
0 123 525 500	063535255000	**MAN2025**
0 123 525 501	063535255010	**MAN2026**
0 124 215 002	063321615010	**MAN807**
0 124 215 007	063321605010	**MAN939**
0 124 225 016	063321332010	**MAN642**
0 124 225 016	063321618010	**MAN810**
0 124 225 020	063532250200	**MAN2027**
0 124 225 022	063532250220	**MAN2036**
0 124 225 024	063532250220	**MAN2036**
0 124 225 061	063321605010	**MAN939**
0 124 320 001	063533200010	**MAN2001**
0 124 325 001	063533250010	**MAN2037**
0 124 325 013	063533250130	**MAN2038**
0 124 325 052	063533250530	**MAN2039**
0 124 325 053	063533250530	**MAN2039**
0 124 325 058	063533250580	**MAN2002**
0 124 325 059	063533250590	**MAN2040**
0 124 325 060	063321836010	**MAN1121**
0 124 325 100	063533251000	**MAN2028**
0 124 325 100	063380007010	**MAN8007**
0 124 325 122	063533251220	**MAN2041**
0 124 415 008	063534150080	**MAN2029**
0 124 415 011	063533250580	**MAN2002**
0 124 415 012	063534150120	**MAN2042**
0 124 415 015	063321729010	**MAN1107**
0 124 415 023	063534150230	**MAN2043**
0 124 425 060	063377423010	**MAN7423**
0 124 425 100	063377490010	**MAN7490**
0 124 515 044	063535150440	**MAN2030**
0 124 525 020	063535250200	**MAN2031**
0 124 555 005	063535550050	**MAN2003**

CROSS REFERENCE	MAGNETI MARELLI	
	LONG	SHORT
BOSCH		
0 124 625 002	063536250020	MAN2044
0 124 655 005	063536550050	MAN2045
0 124 655 008	063536550080	MAN2032
0 986 030 120	063321017010	MAN352
0 986 030 120	063321154010	MAN344
0 986 030 120	063321019010	MAN274
0 986 030 760	054022384010	MAN653
0 986 030 780	054022598010	MAN666
0 986 030 780	063324145010	MAN100
0 986 030 790	063324199010	MAN107
0 986 030 880	063534881590	MAN2012
0 986 030 940	063321154010	MAN344
0 986 030 940	063321155010	MAN320
0 986 030 970	063321021010	MAN354
0 986 030 970	063321041010	MAN284
0 986 030 980	063321011010	MAN349
0 986 031 260	063534897070	MAN2019
0 986 031 340	063320025010	MAN261
0 986 031 340	063320060010	MAN772
0 986 031 380	054022598010	MAN666
0 986 031 410	063321112010	MAN379
0 986 031 410	063321011010	MAN349
0 986 031 410	063321409010	MAN909
0 986 032 171	063321154010	MAN344
0 986 032 340	063341454010	MAN1014
0 986 032 720	063534696430	MAN2010
0 986 033 250	063321154010	MAN344
0 986 033 830	054022598010	MAN666
0 986 033 830	063324145010	MAN100
0 986 033 850	054022598010	MAN666
0 986 033 860	054022598010	MAN666
0 986 033 860	054022581010	MAN649
0 986 033 890	063321409010	MAN909
0 986 033 890	063321011010	MAN349
0 986 034 010	054022585010	MAN652
0 986 034 200	054022581010	MAN649
0 986 034 470	054022604010	MAN662
0 986 034 490	063320049010	MAN771
0 986 034 500	063534893700	MAN2018
0 986 035 630	063320049010	MAN771
0 986 035 641	063321067010	MAN300
0 986 035 641	063321000010	MAN342
0 986 035 700	063321191010	MAN330
0 986 035 760	063321044010	MAN286
0 986 036 010	054022581010	MAN649

CROSS REFERENCE	MAGNETI MARELLI	
	LONG	SHORT
BOSCH		
0 986 036 020	054022581010	MAN649
0 986 036 050	054022585010	MAN652
0 986 036 060	054022598010	MAN666
0 986 036 100	054022581010	MAN649
0 986 036 150	054022585010	MAN652
0 986 036 191	054022585010	MAN652
0 986 036 211	054022585010	MAN652
0 986 036 611	063324264010	MAN139
0 986 036 631	063341345010	MAN828
0 986 036 631	054022708010	MAN1018
0 986 036 690	054022585010	MAN652
0 986 036 701	063341695010	MAN833
0 986 036 750	063321154010	MAN344
0 986 036 750	063321152010	MAN327
0 986 036 780	063321395010	MAN782
0 986 037 120	063321017010	MAN352
0 986 037 130	063321156010	MAN323
0 986 037 150	063321017010	MAN352
0 986 037 160	063321154010	MAN344
0 986 037 160	063321157010	MAN322
0 986 037 410	063534699820	MAN2011
0 986 037 890	063534881850	MAN2013
0 986 038 030	063341345010	MAN828
0 986 038 621	063321173010	MAN331
0 986 038 730	063533350070	MAN2005
0 986 038 990	063533100530	MAN2021
0 986 039 130	063534690480	MAN2009
0 986 039 340	063534681240	MAN2006
0 986 039 471	063321600010	MAN640
0 986 039 471	063321173010	MAN331
0 986 039 501	063321165010	MAN382
0 986 039 510	063533100540	MAN2022
0 986 039 881	063324293010	MAN1023
0 986 039 891	063341343010	MAN826
0 986 040 511	063532615010	MAN2615
0 986 040 621	063321328010	MAN784
0 986 040 631	063321803010	MAN1100
0 986 040 631	063321729010	MAN1107
0 986 040 641	063321802010	MAN1102
0 986 040 641	063321729010	MAN1107
0 986 040 651	063321607010	MAN800
0 986 040 651	063321606010	MAN799
0 986 040 671	063321839010	MAN1119
0 986 040 681	063321810010	MAN1147
0 986 040 681	063321813010	MAN1151

CROSS REFERENCE	MAGNETI MARELLI	
	LONG	SHORT
BOSCH		
0 986 040 691	063321729010	MAN1107
0 986 041 240	063532250220	MAN2036
0 986 041 300	063535150200	MAN2024
0 986 041 381	063388505010	MAN966
0 986 041 490	063533250010	MAN2037
0 986 041 940	063534882530	MAN2015
0 986 041 960	063533200010	MAN2001
0 986 041 970	063533155000	MAN2023
0 986 042 000	063533250580	MAN2002
0 986 042 350	063534681400	MAN2007
0 986 042 590	063535255010	MAN2026
0 986 042 650	063380007010	MAN8007
0 986 042 760	063534150120	MAN2042
0 986 042 780	063321859010	MAN1117
0 986 042 780	063321729010	MAN1107
0 986 042 820	063535150440	MAN2030
0 986 043 680	063534150080	MAN2029
0 986 043 680	063533479010	MAN2801
0 986 044 490	063532250200	MAN2027
0 986 044 611	063341345010	MAN828
0 986 044 631	063341730010	MAN938
0 986 044 651	063377412010	MAN7412
0 986 044 651	063377414010	MAN7414
0 986 044 821	054022708010	MAN1018
0 986 045 160	063535550050	MAN2003
0 986 045 170	063535255000	MAN2025
0 986 045 370	063533251000	MAN2028
0 986 045 370	063380007010	MAN8007
0 986 045 420	063536250020	MAN2044
0 986 045 430	063536550050	MAN2045
0 986 046 060	063533250530	MAN2039
0 986 046 090	063321836010	MAN1121
0 986 046 210	063535250200	MAN2031
0 986 046 480	063321332010	MAN642
0 986 046 480	063321618010	MAN810
0 986 047 280	063534150230	MAN2043
0 986 047 751	063321625010	MAN645
0 986 047 761	063321340010	MAN646
0 986 047 781	063321402010	MAN791
0 986 048 541	063321747010	MAN1041
0 986 048 541	063321604010	MAN798
0 986 048 630	063321605010	MAN939
0 986 048 771	063358061010	MAN1097
0 986 048 781	063358062010	MAN1098
0 986 048 781	063377493010	MAN7493

CROSS REFERENCE	MAGNETI MARELLI	
	LONG	SHORT
BOSCH		
0 986 048 801	063377491010	MAN7491
0 986 049 051	063532620010	MAN2620
0 986 049 071	063377416010	MAN7416
0 986 049 081	063377002010	MAN7002
0 986 049 081	063377008010	MAN7008
0 986 049 081	063377006010	MAN7006
0 986 049 141	063380001010	MAN8001
0 986 049 151	063380002010	MAN8002
0 986 049 181	063380010010	MAN8010
0 986 049 181	063380009010	MAN8009
0 986 049 181	063380008010	MAN8008
0 986 049 231	063321826010	MAN1127
0 986 049 231	063321859010	MAN1117
0 986 049 360	063536550080	MAN2032
0 986 049 410	063341734010	MAN1166
0 986 049 420	063321615010	MAN807
0 986 049 420	063321616010	MAN808
0 986 049 460	063380006010	MAN8006
0 986 049 460	063380005010	MAN8005
0 986 049 520	063380004010	MAN8004
0 986 049 530	063377490010	MAN7490
0 986 049 530	063377492010	MAN7492
0 986 049 540	063377010010	MAN7010
0 986 049 540	063377013010	MAN7013
0 986 049 560	063341734010	MAN1166
0 986 049 610	063321819010	MAN1110
0 986 049 610	063321859010	MAN1117
0 986 049 630	063341740010	MAN1163
0 986 049 700	063321734010	MAN963
0 986 049 740	063321600010	MAN640
0 986 049 750	063341711010	MAN1142
0 986 049 900	063532623010	MAN2623
0 986 049 910	063341740010	MAN1163
0 986 049 980	063380001010	MAN8001
0 986 080 340	063341778010	MAN1155
0 986 080 490	063377001010	MAN7001
0 986 080 550	063321715010	MAN1039
0 986 080 560	063321747010	MAN1041
0 986 080 560	063377011010	MAN7011
0 986 080 980	063377494010	MAN7494
0 986 081 070	063377423010	MAN7423
0 986 081 120	063377425010	MAN7425
0 986 081 140	063377418010	MAN7418
0 986 603 076	063324157010	MAN102
0 986 603 215	063341454010	MAN1014

CROSS REFERENCE	MAGNETI MARELLI	
	LONG	SHORT
BOSCH		
0 986 603 217	063321019010	MAN274
0 986 603 234	063341454010	MAN1014
0 986 603 389	063321409010	MAN909
0 986 603 663	063324293010	MAN1023
0 986 603 670	063341695010	MAN833
0 986 603 675	063321062010	MAN298
0 986 603 947	063321747010	MAN1041
0 986 JR0 908	063532623010	MAN2623
1 126 610 060	063304087010	MAN873
1 126 610 060	063320025010	MAN261
F005A00022	063534882060	MAN2014
CASE IH		
4892318	063535550050	MAN2003
82014508	063321753010	MAN1172
87735076	063534690480	MAN2009
99461190	063534690480	MAN2009
9019635901	063534699820	MAN2011
92281C1	054022656010	MAN766
92292C1	054022656010	MAN766
AR187916	063534882060	MAN2014
K311696	054022656010	MAN766
K311697	054022656010	MAN766
K311698	054022656010	MAN766
P941542	063534882060	MAN2014
PO9415420	063534882060	MAN2014
CATERPILLAR		
082 7022	063534897070	MAN2019
225 3144	063377461010	MAN7461
225 3144	063377463010	MAN7463
305 3661	063377461010	MAN7461
CHEVROLET		
96288095	063532633010	MAN2633
96404010	063532633010	MAN2633
CUMMINS		
3 284 392	063534882060	MAN2014
3 907 749	054022656010	MAN766
3 920 678	063534882060	MAN2014
3 939 028	063534882060	MAN2014
4 892 318	063535550050	MAN2003
4 892 320	063536550050	MAN2045
CV PSH		
105505090	063321819010	MAN1110
105508090	063321836010	MAN1121
135567120	063377495010	MAN7495
495501085	063321858010	MAN1116

CROSS REFERENCE	MAGNETI MARELLI	
	LONG	SHORT
CV PSH		
505006065	063321154010	MAN344
505017055	063321173010	MAN331
505017055	063321067010	MAN300
505017065	063321173010	MAN331
505024065	063321156010	MAN323
505038065	063321062010	MAN298
505038065	063321154010	MAN344
505043055	063321112010	MAN379
505560105	063377007010	MAN7007
705502120	063321753010	MAN1172
DAEWOO		
219091	063532634010	MAN2634
219137	063532637010	MAN2637
219139	063532636010	MAN2636
219177	063532637010	MAN2637
219199	063532637010	MAN2637
96 206 871	063532631010	MAN2631
96 221 945	063532637010	MAN2637
96 224 431	063532635010	MAN2635
96 224 432	063532634010	MAN2634
96 241 176	063532632010	MAN2632
96 252 115	063532637010	MAN2637
96 252 547	063532635010	MAN2635
96 252 551	063532635010	MAN2635
96 258 998	063532632010	MAN2632
96 288 095	063532633010	MAN2633
96 289 030	063532629010	MAN2629
96 289 030	063532620010	MAN2620
96 303 556	063532636010	MAN2636
96 314 258	063532620010	MAN2620
96 343 539	063532632010	MAN2632
96 380 673	063532620010	MAN2620
96 404 010	063532633010	MAN2633
96 404 011	063532637010	MAN2637
96 431 300	063532631010	MAN2631
96 457 322	063532634010	MAN2634
96 540 541	063532630010	MAN2630
96 566 261	063532620010	MAN2620
96 566 262	063532620010	MAN2620
ATP-3556	063532636010	MAN2636
DAF		
854300	063534699820	MAN2011
894300	063534699820	MAN2011
0192158R	054022585010	MAN652
1506770R	063535250200	MAN2031

CROSS REFERENCE	MAGNETI MARELLI	
	LONG	SHORT
DAF		
1516408R	063534150080	MAN2029
1516473R	063534882530	MAN2015
1516485R	063533250130	MAN2038
1516488R	063533155000	MAN2023
1516506R	063535255000	MAN2025
1516514R	063535255010	MAN2026
1516533R	063534696430	MAN2010
1516536R	063534881850	MAN2013
1516560R	063534699820	MAN2011
1516566R	063534897070	MAN2019
1516584R	063534893700	MAN2018
DELCO REMY		
930624	063321173010	MAN331
930624	063321067010	MAN300
19020536	063534882060	MAN2014
19025041	063341454010	MAN1014
19025055	063321112010	MAN379
19025056	063321112010	MAN379
19025065	063321191010	MAN330
19025097	063534696430	MAN2010
19025101	063534681240	MAN2006
19025102	063534696430	MAN2010
19025106	063534690480	MAN2009
19025106	063534882530	MAN2015
19025340	063536895380	MAN2004
19025787	063321154010	MAN344
19025810	063321191010	MAN330
930075N	063532627010	MAN2627
DRA0007	063377002010	MAN7002
DRA0007	063377008010	MAN7008
DRA0007	063377006010	MAN7006
DRA0007N	063377008010	MAN7008
DRA0007N	063377006010	MAN7006
DRA0007N	063377002010	MAN7002
DRA0015	063533251220	MAN2041
DRA0023	063380006010	MAN8006
DRA0023	063380005010	MAN8005
DRA0023N	063380006010	MAN8006
DRA0023N	063380005010	MAN8005
DRA0024	063380008010	MAN8008
DRA0024N	063380008010	MAN8008
DRA0025	063377460010	MAN7460
DRA0026	063377461010	MAN7461
DRA0027	063377462010	MAN7462
DRA0028	063377463010	MAN7463

CROSS REFERENCE	MAGNETI MARELLI	
	LONG	SHORT
DELCO REMY		
DRA0029	063377464010	MAN7464
DRA0031	063377465010	MAN7465
DRA0032	063377466010	MAN7466
DRA0041	063310508010	MAN958
DRA0075	063532627010	MAN2627
DRA0086	063377420010	MAN7420
DRA0089	063358062010	MAN1098
DRA0089	063377423010	MAN7423
DRA0091	063377424010	MAN7424
DRA0092	063377495010	MAN7495
DRA0092	063377425010	MAN7425
DRA0113	063377010010	MAN7010
DRA0113	063377013010	MAN7013
DRA0133	063377011010	MAN7011
DRA0141	063321760010	MAN1125
DRA0156	063532607010	MAN2607
DRA0177	063380001010	MAN8001
DRA0177N	063380001010	MAN8001
DRA0178	063380002010	MAN8002
DRA0207	063377494010	MAN7494
DRA0224	063532618010	MAN2618
DRA0236	063377012010	MAN7012
DRA0237	063321872010	MAN1154
DRA0238	063377009010	MAN7009
DRA0238	063377007010	MAN7007
DRA0239	063321919010	MAN1159
DRA0243	063532622010	MAN2622
DRA0247	063377495010	MAN7495
DRA0253	063377413010	MAN7413
DRA0262	063321753010	MAN1172
DRA0299	063341896010	MAN1170
DRA0317	063377423010	MAN7423
DRA0375	063377014010	MAN7014
DRA0502	063536895380	MAN2004
DRA0790	063324199010	MAN107
DRA0880	063534881590	MAN2012
DRA0940	063321155010	MAN320
DRA0970	063321042010	MAN283
DRA0970	063321041010	MAN284
DRA2151	063341454010	MAN1014
DRA2341	063341454010	MAN1014
DRA2341N	063341454010	MAN1014
DRA2720	063534696430	MAN2010
DRA3145	063532615010	MAN2615
DRA3145N	063532615010	MAN2615

CROSS REFERENCE	MAGNETI MARELLI	
	LONG	SHORT
DELCO REMY		
DRA3146	063532615010	MAN2615
DRA3185	063532623010	MAN2623
DRA3250	063321157010	MAN322
DRA3250	063321156010	MAN323
DRA3250N	063321157010	MAN322
DRA3250N	063321156010	MAN323
DRA3274	063534892520	MAN2035
DRA3283	063321157010	MAN322
DRA3283	063321156010	MAN323
DRA3284	063321017010	MAN352
DRA3294	054022656010	MAN766
DRA3353	063321600010	MAN640
DRA3353	063321173010	MAN331
DRA3355	063321044010	MAN286
DRA3394	063321833010	MAN1128
DRA3394	063321839010	MAN1119
DRA3395	063321839010	MAN1119
DRA3396	063321810010	MAN1147
DRA3396	063321813010	MAN1151
DRA3397	063321606010	MAN799
DRA3397	063321607010	MAN800
DRA3398	063321328010	MAN784
DRA3403	063321800010	MAN1104
DRA3403	063321803010	MAN1100
DRA3404	063321402010	MAN791
DRA3406	063321600010	MAN640
DRA3406	063321616010	MAN808
DRA3406	063321615010	MAN807
DRA3407	063321618010	MAN810
DRA3408N	063321173010	MAN331
DRA3413	063321625010	MAN645
DRA3414	063321747010	MAN1041
DRA3414	063321604010	MAN798
DRA3415	063321600010	MAN640
DRA3416	063321615010	MAN807
DRA3416	063321616010	MAN808
DRA3423	063388505010	MAN966
DRA3424	063321620010	MAN811
DRA3428	063341695010	MAN833
DRA3433	063321347010	MAN787
DRA3433N	063321347010	MAN787
DRA3439	063532611010	MAN2611
DRA3439N	063532611010	MAN2611
DRA3447	063532619010	MAN2619
DRA3447N	063532619010	MAN2619

CROSS REFERENCE	MAGNETI MARELLI	
	LONG	SHORT
DELCO REMY		
DRA3455	063321800010	**MAN1104**
DRA3455	063321729010	**MAN1107**
DRA3456	063321859010	**MAN1117**
DRA3464	063324157010	**MAN102**
DRA3479	063533479010	**MAN2801**
DRA3479N	063533479010	**MAN2801**
DRA3536	063341730010	**MAN938**
DRA3593	063532634010	**MAN2634**
DRA3593N	063532634010	**MAN2634**
DRA3616	063321395010	**MAN782**
DRA3636N	063532631010	**MAN2631**
DRA3637	063532637010	**MAN2637**
DRA3637N	063532637010	**MAN2637**
DRA3638	063532636010	**MAN2636**
DRA3638N	063532636010	**MAN2636**
DRA3639	063321802010	**MAN1102**
DRA3639	063321729010	**MAN1107**
DRA3643	063321605010	**MAN939**
DRA3644	063321715010	**MAN1039**
DRA3645	063321863010	**MAN1156**
DRA3646	063321617010	**MAN809**
DRA3648	063377410010	**MAN7410**
DRA3648	063377411010	**MAN7411**
DRA3649	063377409010	**MAN7409**
DRA3664	063533155000	**MAN2023**
DRA3667	054022656010	**MAN766**
DRA3720	063534893260	**MAN2017**
DRA3766	063321332010	**MAN642**
DRA3766	063321854010	**MAN955**
DRA3767	063321340010	**MAN646**
DRA3830	063534892520	**MAN2035**
DRA3846	063532613010	**MAN2613**
DRA3846N	063532613010	**MAN2613**
DRA3848	063532605010	**MAN2605**
DRA3848N	063532605010	**MAN2605**
DRA3860	063324145010	**MAN100**
DRA3860	054022581010	**MAN649**
DRA3890	063321409010	**MAN909**
DRA3907	063321734010	**MAN963**
DRA3907N	063321734010	**MAN963**
DRA3913	063310506010	**MAN956**
DRA4037	063321800010	**MAN1104**
DRA4037	063321803010	**MAN1100**
DRA4115	063341896010	**MAN1170**
DRA4123	063321605010	**MAN939**

CROSS REFERENCE	MAGNETI MARELLI	
	LONG	SHORT
DELCO REMY		
DRA4143	063380004010	**MAN8004**
DRA4143N	063380004010	**MAN8004**
DRA4144	063380006010	**MAN8006**
DRA4144	063380005010	**MAN8005**
DRA4144N	063380006010	**MAN8006**
DRA4144N	063380005010	**MAN8005**
DRA4173	063532608010	**MAN2608**
DRA4173N	063532608010	**MAN2608**
DRA4174	063532622010	**MAN2622**
DRA4174N	063532622010	**MAN2622**
DRA4175	063532603010	**MAN2603**
DRA4176	063532606010	**MAN2606**
DRA4203	063532624010	**MAN2624**
DRA4203N	063532624010	**MAN2624**
DRA4206	063321819010	**MAN1110**
DRA4206	063321859010	**MAN1117**
DRA4207	063321800010	**MAN1104**
DRA4207	063321803010	**MAN1100**
DRA4237	063380009010	**MAN8009**
DRA4237N	063380009010	**MAN8009**
DRA4238	063380010010	**MAN8010**
DRA4238N	063380010010	**MAN8010**
DRA4239	063377416010	**MAN7416**
DRA4243	063358061010	**MAN1097**
DRA4243	063358062010	**MAN1098**
DRA4244	063358061010	**MAN1097**
DRA4244	063377494010	**MAN7494**
DRA4247	063380002010	**MAN8002**
DRA4247N	063380002010	**MAN8002**
DRA4249	063358062010	**MAN1098**
DRA4249	063377493010	**MAN7493**
DRA4254	063358061010	**MAN1097**
DRA4258	063380001010	**MAN8001**
DRA4258N	063380001010	**MAN8001**
DRA4263	063377490010	**MAN7490**
DRA4263	063377492010	**MAN7492**
DRA4264	063377491010	**MAN7491**
DRA4268	063532609010	**MAN2609**
DRA5630	063320049010	**MAN771**
DRA5641N	063321067010	**MAN300**
DRA5700	063321191010	**MAN330**
DRA6750	063321062010	**MAN298**
DRA6750	063321154010	**MAN344**
DRA7410	063534699820	**MAN2011**
DRA7410N	063534699820	**MAN2011**

CROSS REFERENCE	MAGNETI MARELLI	
	LONG	SHORT
DELCO REMY		
DRA9130	063534690480	**MAN2009**
DRA9340	063534681240	**MAN2006**
DRA9501	063321165010	**MAN382**
DRA9501N	063321165010	**MAN382**
DRA9891	063341343010	**MAN826**
DRB0002	063536550080	**MAN2032**
DRB0002N	063536550080	**MAN2032**
DRB0002X	063536550080	**MAN2032**
DRB0631	063321800010	**MAN1104**
DRB0631	063321729010	**MAN1107**
DRB1240	063532250220	**MAN2036**
DRB1300	063535150200	**MAN2024**
DRB1920	063533250130	**MAN2038**
DRB1940	063534882530	**MAN2015**
DRB1960	063533200010	**MAN2001**
DRB2000	063533250580	**MAN2002**
DRB2760	063534150120	**MAN2042**
DRB2780	063321729010	**MAN1107**
DRB2780	063321859010	**MAN1117**
DRB2820	063535150440	**MAN2030**
DRB3970	063534150230	**MAN2043**
DRB5160	063535550050	**MAN2003**
DRB5160X	063535550050	**MAN2003**
DRB5170	063535255000	**MAN2025**
DRB5170N	063535255000	**MAN2025**
DRB5170X	063535255000	**MAN2025**
DRB5370	063533251000	**MAN2028**
DRB5370	063380007010	**MAN8007**
DRB5370N	063533251000	**MAN2028**
DRB5370N	063380007010	**MAN8007**
DRB5430	063536550050	**MAN2045**
DRB5430X	063536550050	**MAN2045**
DRB6060	063533250530	**MAN2039**
DRB6090	063321836010	**MAN1121**
DRB6210	063535250200	**MAN2031**
DENSO		
1010210-1270	063377025010	**MAN7025**
1010210-1271	063377025010	**MAN7025**
101210-0870	063377016010	**MAN7016**
101210-0871	063377016010	**MAN7016**
101210-0920	063377421010	**MAN7421**
101210-0921	063377421010	**MAN7421**
101210-0930	063377443010	**MAN7443**
101210-0931	063377443010	**MAN7443**
101210-0940	063377496010	**MAN7496**

CROSS REFERENCE	MAGNETI MARELLI	
	LONG	SHORT
DENSO		
101210-0950	063377423010	**MAN7423**
101210-0951	063377423010	**MAN7423**
101210-0960	063377424010	**MAN7424**
101210-0961	063377424010	**MAN7424**
101210-0970	063377425010	**MAN7425**
101210-0971	063377425010	**MAN7425**
101210-1080	063377426010	**MAN7426**
101210-1081	063377426010	**MAN7426**
101210-1090	063377017010	**MAN7017**
101210-1091	063377017010	**MAN7017**
101210-1100	063377018010	**MAN7018**
101210-1101	063377018010	**MAN7018**
101210-1120	063377019010	**MAN7019**
101210-1121	063377019010	**MAN7019**
101210-1130	063377020010	**MAN7020**
101210-1131	063377020010	**MAN7020**
101210-1180	063377021010	**MAN7021**
101210-1181	063377021010	**MAN7021**
101210-1190	063377022010	**MAN7022**
101210-1191	063377022010	**MAN7022**
101210-1200	063377023010	**MAN7023**
101210-1201	063377023010	**MAN7023**
101210-1210	063377024010	**MAN7024**
101210-1211	063377024010	**MAN7024**
101210-1320	063377026010	**MAN7026**
101210-1321	063377026010	**MAN7026**
101210-1380	063377027010	**MAN7027**
101210-1381	063377027010	**MAN7027**
101210-1390	063377028010	**MAN7028**
101210-1391	063377028010	**MAN7028**
101210-1530	063321836010	**MAN1121**
102211-0330	063377443010	**MAN7443**
102211-4120	063377427010	**MAN7427**
102211-6150	063377439010	**MAN7439**
102211-6170	063377441010	**MAN7441**
102211-6180	063377429010	**MAN7429**
102211-6210	063377442010	**MAN7442**
102211-8030	063377409010	**MAN7409**
102211-8040	063377410010	**MAN7410**
102211-8050	063377411010	**MAN7411**
102211-8060	063377412010	**MAN7412**
102211-8070	063377413010	**MAN7413**
102211-8080	063377414010	**MAN7414**
102211-8120	063377463010	**MAN7463**
102211-8130	063377464010	**MAN7464**

CROSS REFERENCE	MAGNETI MARELLI	
	LONG	SHORT
DENSO		
102211-8140	063377465010	**MAN7465**
102211-8150	063377466010	**MAN7466**
102211-8160	063377460010	**MAN7460**
102211-8170	063377461010	**MAN7461**
102211-8180	063377462010	**MAN7462**
102211-8220	063377001010	**MAN7001**
102211-8221	063377001010	**MAN7001**
102211-8230	063377002010	**MAN7002**
102211-8260	063377004010	**MAN7004**
102211-8270	063377005010	**MAN7005**
102211-8280	063377011010	**MAN7011**
102211-8290	063377012010	**MAN7012**
102211-8410	063377300010	**MAN7300**
102211-8430	063377006010	**MAN7006**
102211-8431	063377006010	**MAN7006**
102211-8440	063377008010	**MAN7008**
102211-8441	063377008010	**MAN7008**
102211-8450	063377010010	**MAN7010**
102211-8451	063377010010	**MAN7010**
102211-8460	063377009010	**MAN7009**
102211-8461	063377009010	**MAN7009**
102211-8470	063377013010	**MAN7013**
102211-8471	063377013010	**MAN7013**
102211-8480	063377007010	**MAN7007**
102211-8481	063377007010	**MAN7007**
102211-8612	063377493010	**MAN7493**
102211-8622	063377494010	**MAN7494**
102211-8630	063377495010	**MAN7495**
102211-8631	063377495010	**MAN7495**
102211-8640	063377492010	**MAN7492**
102211-8641	063377492010	**MAN7492**
102211-8650	063377490010	**MAN7490**
102211-8651	063377490010	**MAN7490**
102211-8660	063377491010	**MAN7491**
102211-8661	063377491010	**MAN7491**
102211-8680	063377030010	**MAN7030**
102211-8681	063377030010	**MAN7030**
102211-8690	063377031010	**MAN7031**
102211-8691	063377031010	**MAN7031**
102211-9380	063377436010	**MAN7436**
102211-9400	063377437010	**MAN7437**
102211-9420	063377440010	**MAN7440**
102211-9430	063377428010	**MAN7428**
102211-9460	063377431010	**MAN7431**
102211-9470	063377434010	**MAN7434**

CROSS REFERENCE	MAGNETI MARELLI	
	LONG	SHORT
DENSO		
102211-9480	063377432010	**MAN7432**
102211-9490	063377430010	**MAN7430**
102211-9540	063377438010	**MAN7438**
104210-1360	063377435010	**MAN7435**
104210-2750	063377420010	**MAN7420**
104210-3522	063377416010	**MAN7416**
104210-3523	063377416010	**MAN7416**
104210-3542	063377417010	**MAN7417**
104210-3640	063377418010	**MAN7418**
104210-3641	063377418010	**MAN7418**
104210-3821	063377420010	**MAN7420**
104210-3840	063377419010	**MAN7419**
104210-3850	063377419010	**MAN7419**
104210-3851	063377419010	**MAN7419**
104210-4022	063377421010	**MAN7421**
104210-4840	063377014010	**MAN7014**
104210-5020	063377015010	**MAN7015**
104210-5760	063377421010	**MAN7421**
104210-5770	063377420010	**MAN7420**
104210-5780	063377417010	**MAN7417**
DAN047	063341730010	**MAN938**
DAN1000	063377026010	**MAN7026**
DAN1001	063377025010	**MAN7025**
DAN1002	063377022010	**MAN7022**
DAN1003	063377024010	**MAN7024**
DAN1004	063377030010	**MAN7030**
DAN1005	063377031010	**MAN7031**
DAN1010	063377301010	**MAN7301**
DAN1032	063377493010	**MAN7493**
DAN1034	063377495010	**MAN7495**
DAN501	063321826010	**MAN1127**
DAN502	063321729010	**MAN1107**
DAN504	063341695010	**MAN833**
DAN506	063377490010	**MAN7490**
DAN507	063377409010	**MAN7409**
DAN509	063377491010	**MAN7491**
DAN510	063377492010	**MAN7492**
DAN511	063321600010	**MAN640**
DAN513	063377004010	**MAN7004**
DAN514	063377005010	**MAN7005**
DAN515	063377300010	**MAN7300**
DAN517	063377006010	**MAN7006**
DAN519	063377013010	**MAN7013**
DAN521	063341658010	**MAN1009**
DAN525	063321607010	**MAN800**

CROSS REFERENCE	MAGNETI MARELLI	
	LONG	SHORT
DENSO		
DAN562	063377414010	**MAN7414**
DAN574	063321067010	**MAN300**
DAN575	063321173010	**MAN331**
DAN582	063377421010	**MAN7421**
DAN583	063377423010	**MAN7423**
DAN584	063377424010	**MAN7424**
DAN585	063377425010	**MAN7425**
DAN587	063377410010	**MAN7410**
DAN591	063377002010	**MAN7002**
DAN596	063377008010	**MAN7008**
DAN597	063377009010	**MAN7009**
DAN599	063377007010	**MAN7007**
DAN603	063320025010	**MAN261**
DAN605	063321000010	**MAN342**
DAN607	063321019010	**MAN274**
DAN608	063341454010	**MAN1014**
DAN609	063321042010	**MAN283**
DAN610	063321044010	**MAN286**
DAN611	063321062010	**MAN298**
DAN615	063321152010	**MAN327**
DAN616	063321154010	**MAN344**
DAN617	063321156010	**MAN323**
DAN618	063321165010	**MAN382**
DAN621	063321332010	**MAN642**
DAN623	063321391010	**MAN789**
DAN624	063321485010	**MAN1021**
DAN628	063321618010	**MAN810**
DAN629	063321715010	**MAN1039**
DAN630	063321747010	**MAN1041**
DAN631	063321760010	**MAN1125**
DAN632	063321800010	**MAN1104**
DAN633	063321802010	**MAN1102**
DAN634	063321803010	**MAN1100**
DAN635	063321806010	**MAN1109**
DAN638	063321819010	**MAN1110**
DAN640	063321833010	**MAN1128**
DAN643	063321862010	**MAN1162**
DAN645	063341454010	**MAN1014**
DAN647	063341702010	**MAN1008**
DAN648	063341896010	**MAN1170**
DAN649	063377463010	**MAN7463**
DAN650	063377464010	**MAN7464**
DAN651	063377465010	**MAN7465**
DAN652	063377466010	**MAN7466**
DAN653	063377460010	**MAN7460**

CROSS REFERENCE	MAGNETI MARELLI	
	LONG	SHORT
DENSO		
DAN654	063377461010	**MAN7461**
DAN655	063377462010	**MAN7462**
DAN930	063377416010	**MAN7416**
DAN931	063377417010	**MAN7417**
DAN932	063377418010	**MAN7418**
DAN933	063377419010	**MAN7419**
DAN934	063377420010	**MAN7420**
DAN936	063377015010	**MAN7015**
DAN939	063377427010	**MAN7427**
DAN942	063377428010	**MAN7428**
DAN943	063377429010	**MAN7429**
DAN944	063377430010	**MAN7430**
DAN948	063377431010	**MAN7431**
DAN949	063377432010	**MAN7432**
DAN950	063377433010	**MAN7433**
DAN951	063377434010	**MAN7434**
DAN952	063377435010	**MAN7435**
DAN954	063377436010	**MAN7436**
DAN955	063377437010	**MAN7437**
DAN959	063377438010	**MAN7438**
DAN960	063377439010	**MAN7439**
DAN961	063377440010	**MAN7440**
DAN962	063377441010	**MAN7441**
DAN966	063377442010	**MAN7442**
DAN993	063377426010	**MAN7426**
DAN994	063377017010	**MAN7017**
DAN995	063377018010	**MAN7018**
DAN996	063377019010	**MAN7019**
DAN997	063377028010	**MAN7028**
DAN998	063377011010	**MAN7011**
DAN999	063377027010	**MAN7027**
MS101210-0871	063377016010	**MAN7016**
MS101210-0931	063377443010	**MAN7443**
MS101210-1101	063377018010	**MAN7018**
MS101210-1121	063377019010	**MAN7019**
MS101210-1131	063377020010	**MAN7020**
MS101210-1181	063377021010	**MAN7021**
MS101210-1191	063377022010	**MAN7022**
MS101210-1201	063377023010	**MAN7023**
MS101210-1211	063377024010	**MAN7024**
MS101210-1271	063377025010	**MAN7025**

CROSS REFERENCE	MAGNETI MARELLI	
	LONG	SHORT
DENSO		
MS101210-1321	063377026010	**MAN7026**
MS101210-1381	063377027010	**MAN7027**
MS101210-1421	063377029010	**MAN7029**
MS101210-1530	063321836010	**MAN1121**
MS102211-8571	063377301010	**MAN7301**
MS102211-8681	063377030010	**MAN7030**
MS102211-8691	063377031010	**MAN7031**
MSY63321-8360	063321836010	**MAN1121**
DEUTZ-FAHR		
01178521	063534881850	**MAN2013**
20030014	063534881850	**MAN2013**
29281266	063534897070	**MAN2019**
DRI		
200.128.552	063534881850	**MAN2013**
211.302.902	063533250130	**MAN2038**
211.325.902	063533250130	**MAN2038**
214.108.652	054022656010	**MAN766**
214.120.652	063377460010	**MAN7460**
214.120.852	063377462010	**MAN7462**
214.159.552	063324145010	**MAN100**
218.111.552	063320049010	**MAN771**
218.112.452	063321000010	**MAN342**
218.114.354	063534882530	**MAN2015**
218.116.702	063321017010	**MAN352**
218.122.652	063321157010	**MAN322**
218.125.652	063321152010	**MAN327**
218.125.652	063321087010	**MAN370**
218.127.652	063321157010	**MAN322**
218.129.652	063321600010	**MAN640**
218.129.652	063377001010	**MAN7001**
218.129.752	063321761010	**MAN1150**
218.129.752	063321763010	**MAN1171**
218.130.552	063321165010	**MAN382**
218.133.752	063321747010	**MAN1041**
218.133.752	063321604010	**MAN798**
218.134.652	063321625010	**MAN645**
218.134.852	063321340010	**MAN646**
218.137.652	063321600010	**MAN640**
218.138.552	063321409010	**MAN909**
218.140.852	063321402010	**MAN791**
218.141.652	063321839010	**MAN1119**
218.141.752	063321810010	**MAN1147**

CROSS REFERENCE	MAGNETI MARELLI	
	LONG	SHORT
DRI		
218.141.852	063321810010	MAN1147
218.143.752	063321607010	MAN800
218.143.852	063321328010	MAN784
218.145.802	063388505010	MAN966
218.146.902	063321191010	MAN330
218.148.852	063321802010	MAN1102
218.148.852	063321729010	MAN1107
218.150.852	063321332010	MAN642
218.150.852	063321854010	MAN955
218.154.652	063321615010	MAN807
218.157.902	063533155000	MAN2023
218.159.652	063321615010	MAN807
218.160.652	063321625010	MAN645
218.162.652	063321605010	MAN939
218.163.902	063533250580	MAN2002
218.166.902	063533200010	MAN2001
218.168.852	063321859010	MAN1117
218.172.752	063377002010	MAN7002
218.172.852	063377010010	MAN7010
218.172.852	063377013010	MAN7013
218.176.852	063321391010	MAN789
218.178.752	063358062010	MAN1098
218.181.904	063535255000	MAN2025
218.183.902	063321760010	MAN1125
218.185.704	063535550050	MAN2003
218.185.904	063536550050	MAN2045
218.302.702	063377006010	MAN7006
218.302.702	063377002010	MAN7002
218.303.752	063358062010	MAN1098
218.303.752	063377493010	MAN7493
218.305.702	063377011010	MAN7011
218.308.902	063321919010	MAN1159
218.311.902	063377016010	MAN7016
219.102.452	063534892520	MAN2035
219.104.552	063324157010	MAN102
219.125.702	063341695010	MAN833
219.145.902	063377414010	MAN7414
219.160.902	063380006010	MAN8006
219.160.902	063380005010	MAN8005
219.161.902	063380004010	MAN8004
219.162.902	063380001010	MAN8001
219.171.802	063380002010	MAN8002
219.312.902	063341778010	MAN1155
224.140.502	063532619010	MAN2619
224.148.802	063532607010	MAN2607

CROSS REFERENCE	MAGNETI MARELLI	
	LONG	SHORT
DRI		
225.104.702	063534893260	MAN2017
226.112.652	063532615010	MAN2615
226.112.752	063532615010	MAN2615
226.112.902	063532623010	MAN2623
226.133.902	063532611010	MAN2611
226.141.652	063532605010	MAN2605
226.153.652	063532604010	MAN2604
226.154.602	063532613010	MAN2613
227.304.552	063531446220	MAN2033
228.110.552	063534881590	MAN2012
228.151.752	063358062010	MAN1098
228.151.902	063358061010	MAN1097
228.179.702	063377423010	MAN7423
229.123.802	063377300010	MAN7300
518.111.554	063534690480	MAN2009
518.118.552	063321041010	MAN284
518.118.552	063321021010	MAN354
518.120.804	063534681240	MAN2006
525.107.752	063341896010	MAN1170
526.126.752	063532609010	MAN2609
526.127.752	063532603010	MAN2603
526.127.902	063532606010	MAN2606
532.111.554	063534696430	MAN2010
547.108.852	063532637010	MAN2637
210.111.1002	063321800010	MAN1104
210.111.1002	063321729010	MAN1107
214.124.1002	063377463010	MAN7463
218.147.1002	063321729010	MAN1107
218.148.1052	063321729010	MAN1107
218.150.1002	063321391010	MAN789
218.151.1002	063321859010	MAN1117
218.163.1052	063534150120	MAN2042
218.166.1202	063535150440	MAN2030
218.168.1002	063321826010	MAN1127
218.177.1202	063310508010	MAN958
218.179.1102	063533250530	MAN2039
218.179.1402	063535250200	MAN2031
218.310.1002	063321859010	MAN1117
218.314.1202	063377018010	MAN7018
219.150.1052	063533251000	MAN2028
219.155.1052	063380007010	MAN8007
219.164.1502	063377416010	MAN7416
219.166.1202	063380010010	MAN8010
219.167.1502	063377418010	MAN7418
219.170.1302	063380009010	MAN8009

CROSS REFERENCE	MAGNETI MARELLI	
	LONG	SHORT
DRI		
219.304.1052	063380001010	MAN8001
219.305.1202	063377421010	MAN7421
219.305.1502	063377417010	MAN7417
224.196.1202	063532618010	MAN2618
226.169.1202	063532622010	MAN2622
226.198.1202	063532622010	MAN2622
228.122.1002	063534150080	MAN2029
228.140.1002	063534150230	MAN2043
228.151.1052	063377494010	MAN7494
228.158.1202	063377490010	MAN7490
228.173.1402	063377491010	MAN7491
228.176.1202	063377028010	MAN7028
228.179.1052	063377424010	MAN7424
228.179.1202	063377425010	MAN7425
230.152.1102	063310506010	MAN956
238.153.1202	063377421010	MAN7421
519.029.1502	063377420010	MAN7420
519.030.1302	063380008010	MAN8008
524.114.1102	063532624010	MAN2624
526.126.1102	063532608010	MAN2608
538.116.1104	063536550080	MAN2032
EDER		
930780	063324145010	MAN100
930800	063324145010	MAN100
933830	063324145010	MAN100
933860	063324145010	MAN100
ELSTOCK		
27-3787	063377414010	MAN7414
27-3963	063380004010	MAN8004
27-4696	063380006010	MAN8006
27-4696	063380005010	MAN8005
27-4830	063380010010	MAN8010
27-4850	063380001010	MAN8001
27-4916	063380002010	MAN8002
27-4933	063377416010	MAN7416
27-4968	063380009010	MAN8009
27-4969	063380008010	MAN8008
27-5525	063377418010	MAN7418
27-5651	063380001010	MAN8001
27-5658	063377421010	MAN7421
27-5681	063377420010	MAN7420
27-5682	063377417010	MAN7417
27-5820	063377421010	MAN7421
28-0517	063321021010	MAN354
28-0517	063321041010	MAN284

CROSS REFERENCE	MAGNETI MARELLI	
	LONG	SHORT
ELSTOCK		
28-0519	063321191010	MAN330
28-0726	063534892520	MAN2035
28-0773	063320049010	MAN771
28-0809	063324157010	MAN102
28-0870	063534893260	MAN2017
28-0996	063321000010	MAN342
28-1620	063532615010	MAN2615
28-1621	063532615010	MAN2615
28-1629	054022656010	MAN766
28-1633	063321157010	MAN322
28-1657	063321017010	MAN352
28-1680	063534881590	MAN2012
28-1723	063532623010	MAN2623
28-1778	063321087010	MAN370
28-1778	063321152010	MAN327
28-1815	063531446220	MAN2033
28-1832	063321165010	MAN382
28-1835	063534881850	MAN2013
28-1871	063534150080	MAN2029
28-1992	063321157010	MAN322
28-2504	063377001010	MAN7001
28-2504	063321600010	MAN640
28-2554	063532605010	MAN2605
28-2621	063388505010	MAN966
28-2630	063321607010	MAN800
28-2632	063321402010	MAN791
28-2651	063321625010	MAN645
28-2697	063321839010	MAN1119
28-2700	063321625010	MAN645
28-2704	063341695010	MAN833
28-2706	063321615010	MAN807
28-2709	063321328010	MAN784
28-2721	063321800010	MAN1104
28-2721	063321729010	MAN1107
28-2724	063321810010	MAN1147
28-2725	063321340010	MAN646
28-2734	063321600010	MAN640
28-2735	063321747010	MAN1041
28-2735	063321604010	MAN798
28-2747	063321859010	MAN1117
28-2760	063377463010	MAN7463
28-2861	063532611010	MAN2611
28-2885	054022656010	MAN766
28-2906	063532603010	MAN2603
28-2946	063532637010	MAN2637

CROSS REFERENCE	MAGNETI MARELLI	
	LONG	SHORT
ELSTOCK		
28-2987	063321409010	MAN909
28-3524	063533155000	MAN2023
28-3528	063321802010	MAN1102
28-3528	063321729010	MAN1107
28-3543	063532619010	MAN2619
28-3577	063321615010	MAN807
28-3580	063321332010	MAN642
28-3580	063321854010	MAN955
28-3647	063321729010	MAN1107
28-3721	063532608010	MAN2608
28-3737	063533250580	MAN2002
28-3750	063321826010	MAN1127
28-3753	063321605010	MAN939
28-3784	063533250130	MAN2038
28-3797	063377462010	MAN7462
28-3805	063321810010	MAN1147
28-3807	063533200010	MAN2001
28-3852	063532606010	MAN2606
28-3859	063532609010	MAN2609
28-3884	063380007010	MAN8007
28-3940	063534150230	MAN2043
28-3958	063532613010	MAN2613
28-4508	063532604010	MAN2604
28-4522	063321729010	MAN1107
28-4532	063324145010	MAN100
28-4539	063321761010	MAN1150
28-4539	063321763010	MAN1171
28-4545	063532622010	MAN2622
28-4546	063321859010	MAN1117
28-4570	063534150120	MAN2042
28-4603	063310508010	MAN958
28-4613	063321391010	MAN789
28-4634	063535150440	MAN2030
28-4645	063533251000	MAN2028
28-4676	063310506010	MAN956
28-4706	063532624010	MAN2624
28-4746	063377002010	MAN7002
28-4769	063321391010	MAN789
28-4774	063535250200	MAN2031
28-4791	063377300010	MAN7300
28-4820	063358062010	MAN1098
28-4842	063533250530	MAN2039
28-4846	063341896010	MAN1170
28-4889	063377002010	MAN7002
28-4889	063377006010	MAN7006

CROSS REFERENCE	MAGNETI MARELLI	
	LONG	SHORT
ELSTOCK		
28-4914	063358062010	MAN1098
28-4914	063377493010	MAN7493
28-4917	063377010010	MAN7010
28-4917	063377013010	MAN7013
28-4921	063358061010	MAN1097
28-4927	063377490010	MAN7490
28-4935	063358062010	MAN1098
28-4939	063532607010	MAN2607
28-4946	063321760010	MAN1125
28-5560	063377491010	MAN7491
28-5662	063532618010	MAN2618
28-5667	063532622010	MAN2622
28-5674	063377011010	MAN7011
28-5676	063377423010	MAN7423
28-5677	063377424010	MAN7424
28-5678	063377425010	MAN7425
28-5680	063377028010	MAN7028
28-5749	063321919010	MAN1159
28-5790	063533250130	MAN2038
28-5836	063377494010	MAN7494
28-5871	063321859010	MAN1117
28-5876	063377016010	MAN7016
28-5894	063377461010	MAN7461
28-5911	063341778010	MAN1155
28-5914	063377460010	MAN7460
28-5924	063377018010	MAN7018
48-1596	063534696430	MAN2010
48-2545	063534681240	MAN2006
48-2742	063534882530	MAN2015
48-3674	063534690480	MAN2009
48-4563	063535255000	MAN2025
48-4859	063535550050	MAN2003
48-4860	063536550050	MAN2045
48-4993	063536550080	MAN2032
FENDT		
G 205 900 010 011	063534881850	MAN2013
FIAT Group		
4224325	063321042010	MAN283
4257074	063321042010	MAN283
4273601	063321019010	MAN274
4275283	063321042010	MAN283
4275283	063321154010	MAN344
4330483	063321011010	MAN349
4373601	063321154010	MAN344
4379899	063321011010	MAN349

CROSS REFERENCE	MAGNETI MARELLI	
	LONG	SHORT
FIAT Group		
4379901	063321011010	MAN349
4382200	063321409010	MAN909
4383593	063341454010	MAN1014
4386883	063321011010	MAN349
4395131	063321154010	MAN344
4395134	063321155010	MAN320
4405303	063321155010	MAN320
4417595	063341454010	MAN1014
4418109	063321155010	MAN320
4419109	063321155010	MAN320
4419794	063321155010	MAN320
4424346	063321011010	MAN349
4434083	063321155010	MAN320
4450594	063341454010	MAN1014
4451759	063341454010	MAN1014
4456152	063341454010	MAN1014
4458618	063341454010	MAN1014
4460681	063321409010	MAN909
4474525	063321011010	MAN349
4474592	063320025010	MAN261
4474752	063321042010	MAN283
4474902	063304087010	MAN873
4475266	063321019010	MAN274
4475268	063321019010	MAN274
4475303	063321409010	MAN909
4475902	063320025010	MAN261
4478678	063321409010	MAN909
4670238	063321858010	MAN1116
4699242	063304087010	MAN873
4711700	063321021010	MAN354
4711700	063321042010	MAN283
4715786	063320060010	MAN772
4717509	063320025010	MAN261
4717509	063304087010	MAN873
4717871	063320060010	MAN772
4717871	063304087010	MAN873
4717872	063320025010	MAN261
4717872	063304087010	MAN873
4720511	063321042010	MAN283
4721578	063321021010	MAN354
4721578	063321042010	MAN283
4721587	063321042010	MAN283
4721588	063321042010	MAN283
4721589	063321042010	MAN283
4721589	063321041010	MAN284

CROSS REFERENCE	MAGNETI MARELLI	
	LONG	SHORT
FIAT Group		
4721591	063321041010	MAN284
4721591	063321042010	MAN283
4721592	063321041010	MAN284
4721592	063321042010	MAN283
4721890	063320060010	MAN772
4721890	063320025010	MAN261
4722502	063321042010	MAN283
4722724	063320060010	MAN772
4722724	063304087010	MAN873
4731839	063321041010	MAN284
4731839	063321042010	MAN283
4738563	063320025010	MAN261
4738563	063321042010	MAN283
4738568	063320025010	MAN261
4738568	063304087010	MAN873
4738569	063304087010	MAN873
4738569	063320060010	MAN772
4738570	063320060010	MAN772
4738570	063304087010	MAN873
4738571	063304087010	MAN873
4738571	063320060010	MAN772
4738772	063320060010	MAN772
4738772	063304087010	MAN873
4738773	063320025010	MAN261
4738773	063304087010	MAN873
4738775	063304087010	MAN873
4738775	063320060010	MAN772
4746400	063321042010	MAN283
4750583	063321042010	MAN283
4750583	063321041010	MAN284
4765931	063321019010	MAN274
4765931	063320049010	MAN771
4765933	063320049010	MAN771
4765933	063321019010	MAN274
4765934	063320049010	MAN771
4765934	063321019010	MAN274
4769911	063321042010	MAN283
4786913	063320060010	MAN772
4786913	063304087010	MAN873
4786914	063304087010	MAN873
4786914	063320025010	MAN261
4786915	063320025010	MAN261
4786915	063304087010	MAN873
4786916	063304087010	MAN873
4786916	063320025010	MAN261

CROSS REFERENCE	MAGNETI MARELLI	
	LONG	SHORT
FIAT Group		
4786917	063320025010	MAN261
4786917	063304087010	MAN873
4786918	063320025010	MAN261
4786918	063304087010	MAN873
4786919	063304087010	MAN873
4786919	063320025010	MAN261
4786920	063304087010	MAN873
4786920	063320025010	MAN261
4787594	063321042010	MAN283
4787596	063321042010	MAN283
4787597	063321042010	MAN283
4787598	063321042010	MAN283
4787668	063320049010	MAN771
4787668	063321019010	MAN274
4787671	063321019010	MAN274
4787671	063320049010	MAN771
4800504	063321019010	MAN274
4800504	063320049010	MAN771
4803546	063304087010	MAN873
4803546	063320025010	MAN261
4808268	063320025010	MAN261
4808495	063321042010	MAN283
4808497	063321042010	MAN283
4808498	063321042010	MAN283
4808499	063321042010	MAN283
4808502	063321044010	MAN286
4808503	063321041010	MAN284
4808503	063321021010	MAN354
4808505	063321042010	MAN283
4808505	063321041010	MAN284
4808506	063320049010	MAN771
4808506	063321042010	MAN283
4808507	063321044010	MAN286
4808510	063320049010	MAN771
4808510	063321019010	MAN274
4808511	063320049010	MAN771
4808517	063320049010	MAN771
4808517	063321019010	MAN274
4808518	063321019010	MAN274
4808518	063320049010	MAN771
4808519	063320025010	MAN261
4808519	063320060010	MAN772
4808520	063320025010	MAN261
4808520	063304087010	MAN873
4808521	063304087010	MAN873

CROSS REFERENCE	MAGNETI MARELLI	
	LONG	SHORT
FIAT Group		
4808521	063320025010	MAN261
4808522	063320025010	MAN261
4808522	063304087010	MAN873
4808523	063320025010	MAN261
4808523	063304087010	MAN873
4808524	063320025010	MAN261
4808524	063304087010	MAN873
4808525	063320025010	MAN261
4808525	063304087010	MAN873
4808526	063320060010	MAN772
4808526	063304087010	MAN873
4808528	063320060010	MAN772
4808528	063304087010	MAN873
4839558	063304087010	MAN873
4839558	063320025010	MAN261
4849157	063320049010	MAN771
4998353	063321042010	MAN283
5101645	063321019010	MAN274
5895028	063321173010	MAN331
5895028	063321600010	MAN640
5895029	063321616010	MAN808
5895029	063321615010	MAN807
5895030	063321617010	MAN809
5895033	063321604010	MAN798
5895033	063321747010	MAN1041
5895034	063321600010	MAN640
5895036	063321625010	MAN645
5920974	063321011010	MAN349
5920974	063321409010	MAN909
5931926	063321112010	MAN379
5943452	063321011010	MAN349
5947366	063341454010	MAN1014
5947376	063341454010	MAN1014
5952011	063341454010	MAN1014
5955501	063321155010	MAN320
5960287	063321011010	MAN349
5960287	063321409010	MAN909
5960287	063321112010	MAN379
5960292	063321011010	MAN349
5962646	063341454010	MAN1014
5962647	063321409010	MAN909
5962647	063321112010	MAN379
5962647	063321011010	MAN349
5967212	063321000010	MAN342
5972197	063321011010	MAN349

CROSS REFERENCE	MAGNETI MARELLI	
	LONG	SHORT
FIAT Group		
5972197	063321409010	MAN909
5973034	063341454010	MAN1014
5973035	063341454010	MAN1014
5976915	063321112010	MAN379
5976915	063321409010	MAN909
5976915	063321011010	MAN349
5990966	063320025010	MAN261
5991834	063321011010	MAN349
5991835	063321011010	MAN349
5991941	063321011010	MAN349
5991942	063321011010	MAN349
5999868	063321000010	MAN342
5999869	063321000010	MAN342
7546342	063341454010	MAN1014
7546343	063341454010	MAN1014
7547657	063321011010	MAN349
7547680	063320049010	MAN771
7547685	063321017010	MAN352
7547935	063321062010	MAN298
7548143	063321062010	MAN298
7552264	063321017010	MAN352
7552284	063321112010	MAN379
7552284	063321409010	MAN909
7552382	063321017010	MAN352
7552459	063321155010	MAN320
7565560	063321409010	MAN909
7565560	063321112010	MAN379
7565832	063321067010	MAN300
7575998	063321409010	MAN909
7575998	063321112010	MAN379
7580206	063321154010	MAN344
7581226	063321395010	MAN782
7629272	063321191010	MAN330
7631385	063321191010	MAN330
7634024	063321395010	MAN782
7634289	063321087010	MAN370
7634289	063321154010	MAN344
7634289	063321152010	MAN327
7646189	063321062010	MAN298
7646189	063321152010	MAN327
7646189	063321154010	MAN344
7648126	063321155010	MAN320
7650210	063321155010	MAN320
7651050	063321156010	MAN323
7651050	063321157010	MAN322

CROSS REFERENCE	MAGNETI MARELLI	
	LONG	SHORT
FIAT Group		
7651051	063321156010	MAN323
7651070	063321157010	MAN322
7651812	063321112010	MAN379
7651812	063321409010	MAN909
7674685	063321191010	MAN330
7693374	063321165010	MAN382
7697863	063321152010	MAN327
7697863	063321154010	MAN344
7697870	063321152010	MAN327
7697870	063321154010	MAN344
7699408	063321191010	MAN330
7702241	063321155010	MAN320
7702242	063321156010	MAN323
7702245	063321157010	MAN322
7702247	063321157010	MAN322
7702372	063321155010	MAN320
7704356	063321165010	MAN382
7711092	063321165010	MAN382
7712541	063321600010	MAN640
7713141	063321173010	MAN331
7715541	063321173010	MAN331
7715541	063321600010	MAN640
7721122	063321615010	MAN807
7721122	063321616010	MAN808
7754833	063321154010	MAN344
7762899	063321395010	MAN782
7769840	063321854010	MAN955
7769840	063321332010	MAN642
7778020	063321616010	MAN808
7778020	063321615010	MAN807
7779820	063321604010	MAN798
7779821	063321600010	MAN640
7779821	063321604010	MAN798
7779915	063321173010	MAN331
7779915	063321600010	MAN640
7781075	063321729010	MAN1107
7782188	063321859010	MAN1117
7782314	063321729010	MAN1107
7782315	063321859010	MAN1117
7788683	063321625010	MAN645
7788684	063321340010	MAN646
7798011	063321618010	MAN810
42498163	063320025010	MAN261
42498164	063320025010	MAN261
42498165	063321042010	MAN283

CROSS REFERENCE	MAGNETI MARELLI	
	LONG	SHORT
FIAT Group		
42498213	063320025010	MAN261
42498239	063321042010	MAN283
42498240	063321042010	MAN283
42498271	063320025010	MAN261
42758246	063377009010	MAN7009
46000353	063321600010	MAN640
46000357	063321616010	MAN808
46231650	063321165010	MAN382
46231655	063321021010	MAN354
46231657	063321000010	MAN342
46231658	063321173010	MAN331
46231660	063321067010	MAN300
46231670	063321839010	MAN1119
46231671	063321729010	MAN1107
46231680	063321042010	MAN283
46231691	063321157010	MAN322
46231692	063321605010	MAN939
46231693	063321173010	MAN331
46231693	063321600010	MAN640
46231695	063321604010	MAN798
46231695	063321747010	MAN1041
46231698	063321625010	MAN645
46231699	063321615010	MAN807
46231705	063321607010	MAN800
46231705	063321606010	MAN799
46231721	063321156010	MAN323
46231724	063321729010	MAN1107
46231726	063320049010	MAN771
46231740	063321087010	MAN370
46231745	063321087010	MAN370
46231746	063321152010	MAN327
46231751	063321112010	MAN379
46231751	063321011010	MAN349
46231752	063321112010	MAN379
46231753	063321112010	MAN379
46231755	063321011010	MAN349
46231756	063321017010	MAN352
46231758	063320049010	MAN771
46231760	063321409010	MAN909
46231763	063321617010	MAN809
46231786	063321042010	MAN283
46231786	063321021010	MAN354
46231787	063388505010	MAN966
46305329	063321729010	MAN1107
46404143	063321620010	MAN811

CROSS REFERENCE	MAGNETI MARELLI	
	LONG	SHORT
FIAT Group		
46407644	063321173010	MAN331
46407645	063321615010	MAN807
46407645	063321616010	MAN808
46407646	063321604010	MAN798
46407646	063321747010	MAN1041
46407647	063321600010	MAN640
46407647	063321604010	MAN798
46407648	063321625010	MAN645
46412678	063321839010	MAN1119
46412681	063321729010	MAN1107
46413021	063321402010	MAN791
46416343	063321604010	MAN798
46419297	063321605010	MAN939
46419321	063321625010	MAN645
46419911	063321173010	MAN331
46419911	063321067010	MAN300
46420960	063321173010	MAN331
46420961	063321615010	MAN807
46420961	063321616010	MAN808
46420962	063321606010	MAN799
46420963	063321340010	MAN646
46420964	063321615010	MAN807
46420964	063321616010	MAN808
46420965	063321616010	MAN808
46420965	063321615010	MAN807
46420966	063321854010	MAN955
46422107	063321608010	MAN801
46423663	063321813010	MAN1151
46425517	063321618010	MAN810
46428730	063321729010	MAN1107
46428733	063321607010	MAN800
46428733	063321606010	MAN799
46428734	063321328010	MAN784
46430110	063321617010	MAN809
46430110	063321620010	MAN811
46430111	063321620010	MAN811
46430112	063321391010	MAN789
46430524	063321604010	MAN798
46430527	063321839010	MAN1119
46430528	063321729010	MAN1107
46430529	063321729010	MAN1107
46430530	063321859010	MAN1117
46430531	063321729010	MAN1107
46430533	063321800010	MAN1104
46430573	063321395010	MAN782

CROSS REFERENCE	MAGNETI MARELLI	
	LONG	SHORT
FIAT Group		
46431712	063321191010	MAN330
46432411	063321625010	MAN645
46432413	063534150120	MAN2042
46432732	063321625010	MAN645
46432733	063321340010	MAN646
46434930	063321620010	MAN811
46434930	063321617010	MAN809
46434931	063321391010	MAN789
46434932	063321615010	MAN807
46434932	063321616010	MAN808
46434933	063321332010	MAN642
46434935	063321615010	MAN807
46434935	063321616010	MAN808
46436507	063321600010	MAN640
46436507	063321604010	MAN798
46437412	063321605010	MAN939
46437413	063321715010	MAN1039
46445094	063321152010	MAN327
46445099	063321155010	MAN320
46445100	063321156010	MAN323
46445101	063321157010	MAN322
46445102	063321191010	MAN330
46445658	063321729010	MAN1107
46445660	063321803010	MAN1100
46445660	063321800010	MAN1104
46446292	063321409010	MAN909
46446292	063321112010	MAN379
46447117	063321859010	MAN1117
46448433	063321813010	MAN1151
46448434	063321802010	MAN1102
46457327	063321803010	MAN1100
46457327	063321800010	MAN1104
46472225	063321165010	MAN382
46472226	063321391010	MAN789
46516740	063321715010	MAN1039
46521851	063321485010	MAN1021
46530261	063321605010	MAN939
46532667	063533250580	MAN2002
46532668	063533250580	MAN2002
46532669	063534150120	MAN2042
46540293	063321615010	MAN807
46540293	063321616010	MAN808
46540294	063321332010	MAN642
46542889	063377008010	MAN7008
46542889	063377002010	MAN7002

CROSS REFERENCE	MAGNETI MARELLI	
	LONG	SHORT
FIAT Group		
46543023	063321858010	MAN1116
46544329	063321859010	MAN1117
46554402	063321763010	MAN1171
46554405	063321761010	MAN1150
46554405	063321763010	MAN1171
46554408	063321729010	MAN1107
46554408	063321859010	MAN1117
46559015	063321604010	MAN798
46709067	063321858010	MAN1116
46709068	063321859010	MAN1117
46735837	063321803010	MAN1100
46736968	063321760010	MAN1125
46740243	063321806010	MAN1109
46742110	063321600010	MAN640
46748343	063321859010	MAN1117
46758244	063321600010	MAN640
46758246	063377009010	MAN7009
46763532	063321802010	MAN1102
46763533	063321819010	MAN1110
46763533	063321729010	MAN1107
46763534	063321806010	MAN1109
46765835	063321800010	MAN1104
46765836	063321729010	MAN1107
46765837	063321803010	MAN1100
46765837	063321800010	MAN1104
46765838	063321859010	MAN1117
46765842	063321605010	MAN939
46769369	063321729010	MAN1107
46774413	063321854010	MAN955
46774424	063321813010	MAN1151
46774429	063321862010	MAN1162
46774430	063321819010	MAN1110
46774430	063321729010	MAN1107
46782212	063321826010	MAN1127
46782213	063321826010	MAN1127
46782218	063321833010	MAN1128
46782219	063321836010	MAN1121
46782219	063321729010	MAN1107
46791695	063534150120	MAN2042
46800158	063377001010	MAN7001
46813061	063533250580	MAN2002
46813062	063321836010	MAN1121
46813063	063533250590	MAN2040
46813065	063377001010	MAN7001
46816029	063377001010	MAN7001

CROSS REFERENCE	MAGNETI MARELLI	
	LONG	SHORT
FIAT Group		
46816031	063321747010	MAN1041
46816033	063321872010	MAN1154
46823540	063321862010	MAN1162
46823546	063358062010	MAN1098
46823547	063358061010	MAN1097
46830210	063321919010	MAN1159
46832123	063533250590	MAN2040
46835095	063377494010	MAN7494
46843091	063377002010	MAN7002
46843091	063377008010	MAN7008
46843093	063377001010	MAN7001
46843098	063321600010	MAN640
47220501	063321042010	MAN283
48008507	063321044010	MAN286
50500728	063377015010	MAN7015
50502479	063377014010	MAN7014
51700669	063377012010	MAN7012
51700670	063321747010	MAN1041
51700675	063377011010	MAN7011
51709131	063377010010	MAN7010
51709132	063377009010	MAN7009
51709133	063377002010	MAN7002
51709133	063377008010	MAN7008
51714791	063377010010	MAN7010
51714791	063377013010	MAN7013
51714792	063377007010	MAN7007
51714794	063377006010	MAN7006
51718499	063358062010	MAN1098
51718502	063377030010	MAN7030
51727333	063377031010	MAN7031
51727338	063377016010	MAN7016
51734825	063377015010	MAN7015
51764265	063377017010	MAN7017
51784845	063358061010	MAN1097
51784846	063377494010	MAN7494
51784847	063358062010	MAN1098
51787196	063377027010	MAN7027
51787208	063358062010	MAN1098
51787209	063377019010	MAN7019
51787209	063358061010	MAN1097
51787210	063377020010	MAN7020
51788658	063377426010	MAN7426
51793678	063377018010	MAN7018
51805799	063377021010	MAN7021
51805800	063358061010	MAN1097

CROSS REFERENCE	MAGNETI MARELLI	
	LONG	SHORT
FIAT Group		
51805800	063377022010	MAN7022
51805801	063377023010	MAN7023
51805803	063377024010	MAN7024
51810284	063377025010	MAN7025
51829383	063377028010	MAN7028
51854898	063377026010	MAN7026
51854901	063377017010	MAN7017
51854902	063377018010	MAN7018
51854903	063377426010	MAN7426
51854905	063377024010	MAN7024
51854907	063377025010	MAN7025
51854909	063377021010	MAN7021
51854910	063377022010	MAN7022
51854911	063377023010	MAN7023
51854912	063377028010	MAN7028
51854915	063377019010	MAN7019
51854916	063377020010	MAN7020
51855875	063377029010	MAN7029
51859037	063377006010	MAN7006
51859038	063377013010	MAN7013
51859039	063377007010	MAN7007
51859041	063377027010	MAN7027
51859042	063377011010	MAN7011
51859043	063377030010	MAN7030
51859044	063377031010	MAN7031
51859058	063377016010	MAN7016
51859642	063321836010	MAN1121
55185075	063358062010	MAN1098
55185076	063358061010	MAN1097
55185076	063377019010	MAN7019
60699935	063377014010	MAN7014
60807359	063321395010	MAN782
60808791	063321191010	MAN330
60811651	063321191010	MAN330
60812535	063321859010	MAN1117
60812583	063321800010	MAN1104
60812713	063321729010	MAN1107
60812814	063321802010	MAN1102
60812988	063321810010	MAN1147
60812988	063321813010	MAN1151
60812989	063321810010	MAN1147
60815953	063321859010	MAN1117
60816045	063321859010	MAN1117
60816046	063321729010	MAN1107
60816047	063321802010	MAN1102

CROSS REFERENCE	MAGNETI MARELLI	
	LONG	SHORT
FIAT Group		
60816557	063321826010	MAN1127
60816760	063321858010	MAN1116
61146532	063320025010	MAN261
62231786	063321042010	MAN283
63321711	063341711010	MAN1142
71739603	063321800010	MAN1104
71746673	063377005010	MAN7005
71780099	063321863010	MAN1156
73501591	063377005010	MAN7005
73503235	063377004010	MAN7004
77028550	063321042010	MAN283
77028550	063321044010	MAN286
77050550	063320060010	MAN772
77050550	063320025010	MAN261
77110410	063341454010	MAN1014
77110411	063341454010	MAN1014
77110890	063321165010	MAN382
77138410	063321042010	MAN283
77145410	063321019010	MAN274
77250410	063321042010	MAN283
77323410	063321011010	MAN349
77323410	063321409010	MAN909
77337410	063321011010	MAN349
77338410	063321011010	MAN349
77338410	063321409010	MAN909
77340410	063321011010	MAN349
77340411	063321011010	MAN349
77347411	063321067010	MAN300
77412410	063321017010	MAN352
77452410	063320049010	MAN771
77515410	063321042010	MAN283
77515411	063321041010	MAN284
77515411	063321042010	MAN283
77523410	063321011010	MAN349
77523410	063321409010	MAN909
77535410	063321087010	MAN370
77603411	063321157010	MAN322
77612410	063321011010	MAN349
77728410	063321011010	MAN349
77991950	063321813010	MAN1151
88206010	063321042010	MAN283
88206020	063304087010	MAN873
88206020	063320025010	MAN261
91600760	063321600010	MAN640
98490185	063388505010	MAN966

CROSS REFERENCE	MAGNETI MARELLI	
	LONG	SHORT
FIAT Group		
294391300	063321042010	MAN283
294392000	063321042010	MAN283
456431712	063321191010	MAN330
462123705	063321607010	MAN800
786994080	063321191010	MAN330
1304491080	063321391010	MAN789
1305709080	063321617010	MAN809
1312390080	063321391010	MAN789
1315060080	063321617010	MAN809
1315060080	063321620010	MAN811
9638275480	063321734010	MAN963
9642880180	063321734010	MAN963
9649611380	063341734010	MAN1166
116760506000	063321041010	MAN284
116760506000	063321042010	MAN283
116760506100	063321042010	MAN283
116760506100	063321041010	MAN284
116760506100	063321021010	MAN354
FORD		
129259	063377416010	MAN7416
1005245	063324145010	MAN100
1005270	063324145010	MAN100
1005308	054022581010	MAN649
1005348	063534892520	MAN2035
1005349	054022581010	MAN649
1005351	054022604010	MAN662
1005396	054022598010	MAN666
1015821	063341730010	MAN938
1018873	063341730010	MAN938
1058821	063341343010	MAN826
1066047	063341730010	MAN938
1066407	063341730010	MAN938
1071383	063341730010	MAN938
1072455	063321347010	MAN787
1072455	063321753010	MAN1172
1073049	063341343010	MAN826
1074633	063341695010	MAN833
1076005	063535150200	MAN2024
1079312	063377412010	MAN7412
1097306	063377412010	MAN7412
1100711	063533250010	MAN2037
1102820	063341711010	MAN1142
1102821	063341778010	MAN1155
1107444	063341695010	MAN833
1107446	063341730010	MAN938

CROSS REFERENCE	MAGNETI MARELLI	
	LONG	SHORT
FORD		
1108479	063533100540	MAN2022
1117829	063341778010	MAN1155
1120211	063380006010	MAN8006
1120211	063380005010	MAN8005
1120213	063380004010	MAN8004
1122105	063341711010	MAN1142
1124015	063380005010	MAN8005
1124015	063380006010	MAN8006
1126051	063377412010	MAN7412
1128296	063341758010	MAN1143
1131820	063380005010	MAN8005
1131820	063380006010	MAN8006
1136152	063341730010	MAN938
1138231	063377412010	MAN7412
1140135	063380002010	MAN8002
1140694	063380004010	MAN8004
1140696	063380006010	MAN8006
1140696	063388502010	MAN885
1144183	063377412010	MAN7412
1145715	063380001010	MAN8001
1151212	063380005010	MAN8005
1151213	063380004010	MAN8004
1201206	063377412010	MAN7412
1211891	063380005010	MAN8005
1211891	063380006010	MAN8006
1221059	063377412010	MAN7412
1229259	063377416010	MAN7416
1229421	063380009010	MAN8009
1229424	063380001010	MAN8001
1255711	063377416010	MAN7416
1303447	063380002010	MAN8002
1307487	063377412010	MAN7412
1307487	063377414010	MAN7414
1352431	063377418010	MAN7418
1376695	063380010010	MAN8010
1376696	063380009010	MAN8009
1429688	063380010010	MAN8010
1429689	063380009010	MAN8009
1464755	063380001010	MAN8001
1464756	063380002010	MAN8002
1464779	063380005010	MAN8005
1464782	063380004010	MAN8004
1464783	063380006010	MAN8006
1464784	063380009010	MAN8009
1464785	063380008010	MAN8008

CROSS REFERENCE	MAGNETI MARELLI	
	LONG	SHORT
FORD		
1465173	063380010010	**MAN8010**
1477738	063377416010	**MAN7416**
1477740	063377418010	**MAN7418**
1477971	063380010010	**MAN8010**
1478187	063380008010	**MAN8008**
1479818	063380001010	**MAN8001**
1535436	063377011010	**MAN7011**
1553520	054022598010	**MAN666**
1610118	054022581010	**MAN649**
1658023	063324264010	**MAN139**
1668894	054022708010	**MAN1018**
1673520	063377011010	**MAN7011**
1708383	063377418010	**MAN7418**
4041624	063380007010	**MAN8007**
4047102	063380007010	**MAN8007**
4055946	063380007010	**MAN8007**
4069776	063380007010	**MAN8007**
4098414	063380007010	**MAN8007**
4123719	063380007010	**MAN8007**
4170444	063321753010	**MAN1172**
4332279	063380007010	**MAN8007**
4362258	063380007010	**MAN8007**
4371000	063380010010	**MAN8010**
4371001	063380008010	**MAN8008**
4374447	063380010010	**MAN8010**
4374448	063380008010	**MAN8008**
4394204	063380010010	**MAN8010**
4461712	063533251000	**MAN2028**
4531025	063380010010	**MAN8010**
4531026	063380009010	**MAN8009**
4668037	063380007010	**MAN8007**
5007074	063324145010	**MAN100**
5007075	063324199010	**MAN107**
5007077	054022384010	**MAN653**
5008756	063324199010	**MAN107**
5008978	063324145010	**MAN100**
5008989	054022581010	**MAN649**
5011974	063324145010	**MAN100**
5016015	054022604010	**MAN662**
5021161	063324145010	**MAN100**
5021162	054022581010	**MAN649**
5021175	063534892520	**MAN2035**
5021175	063324145010	**MAN100**
5021188	054022585010	**MAN652**
5022265	054022598010	**MAN666**

CROSS REFERENCE	MAGNETI MARELLI	
	LONG	SHORT
FORD		
5023520	054022581010	**MAN649**
5023525	054022585010	**MAN652**
5023528	063324145010	**MAN100**
5023528	054022581010	**MAN649**
5023529	063324145010	**MAN100**
5023529	063534892520	**MAN2035**
5023530	054022581010	**MAN649**
5023530	054022384010	**MAN653**
5023531	054022604010	**MAN662**
5024361	054022585010	**MAN652**
5026096	054022581010	**MAN649**
5026100	054022581010	**MAN649**
5026107	063324145010	**MAN100**
5026112	063324145010	**MAN100**
5026113	054022604010	**MAN662**
5026716	063324264010	**MAN139**
5026721	063324264010	**MAN139**
5026722	063341695010	**MAN833**
5026728	063324264010	**MAN139**
5027810	054022708010	**MAN1018**
5027847	054022585010	**MAN652**
5027848	054022708010	**MAN1018**
5029902	054022708010	**MAN1018**
5029904	063324293010	**MAN1023**
5029905	063341345010	**MAN828**
5029923	054022585010	**MAN652**
5030343	063341343010	**MAN826**
5030589	063341695010	**MAN833**
5128966	063380010010	**MAN8010**
6056325	063324199010	**MAN107**
6071964	063324145010	**MAN100**
6072962	063324145010	**MAN100**
6095319	054022581010	**MAN649**
6136946	054022581010	**MAN649**
6136957	054022604010	**MAN662**
6150023	054022581010	**MAN649**
6150024	054022581010	**MAN649**
6153007	054022581010	**MAN649**
6158225	054022581010	**MAN649**
6159272	054022581010	**MAN649**
6159272	063324145010	**MAN100**
6175182	063324145010	**MAN100**
6181359	054022598010	**MAN666**
6183162	054022581010	**MAN649**
6196157	054022581010	**MAN649**

CROSS REFERENCE	MAGNETI MARELLI	
	LONG	SHORT
FORD		
6196158	054022581010	**MAN649**
6694981	054022585010	**MAN652**
6917885	063341345010	**MAN828**
6961250	063341345010	**MAN828**
6983801	063324264010	**MAN139**
7179742	063341345010	**MAN828**
7197314	063324293010	**MAN1023**
7302659	054022708010	**MAN1018**
7312901	063341343010	**MAN826**
7352057	063341695010	**MAN833**
54022349	063324157010	**MAN102**
54022521	063341345010	**MAN828**
1M5T10300BC	063377413010	**MAN7413**
1S7T10300BA	063388502010	**MAN885**
1S7T10300BB	063388502010	**MAN885**
1S7T10300BC	063380005010	**MAN8005**
1S7T10300CA	063380004010	**MAN8004**
1S7T10300CB	063380004010	**MAN8004**
1S7T10300CC	063380004010	**MAN8004**
1S7T10300CD	063380004010	**MAN8004**
1S7T10300DA	063380006010	**MAN8006**
1S7T10300DB	063380006010	**MAN8006**
1S7T10300DC	063380005010	**MAN8005**
1S7T10300DD	063380006010	**MAN8006**
1S7T10300DE	063380006010	**MAN8006**
2C1T10 300 BA	063533251000	**MAN2028**
2C1T10 300 BA	063380007010	**MAN8007**
2M5T10300AD	063377414010	**MAN7414**
2S6T10300FA	063380001010	**MAN8001**
2S6T10300FB	063380001010	**MAN8001**
2S6T10300FC	063380001010	**MAN8001**
2T1U10300AD	063380010010	**MAN8010**
2T1U10300AE	063380010010	**MAN8010**
2T1U10300AF	063380010010	**MAN8010**
2T1U10300AG	063380010010	**MAN8010**
2T1U10300AH	063380010010	**MAN8010**
2T1U10300AJ	063380010010	**MAN8010**
2T1U10300AK	063380010010	**MAN8010**
2T1U10300AL	063380010010	**MAN8010**
2T1U10300AM	063380010010	**MAN8010**
2T1U10300BB	063380008010	**MAN8008**
2T1U10300BC	063380008010	**MAN8008**
2T1U10300BD	063380008010	**MAN8008**
2T1U10300BE	063380008010	**MAN8008**

CROSS REFERENCE	MAGNETI MARELLI	
	LONG	SHORT
FORD		
2T1U10300CA	063380009010	**MAN8009**
2T1U10300CB	063380009010	**MAN8009**
2T1U10300CC	063380009010	**MAN8009**
2T1U10300CD	063380009010	**MAN8009**
2T1U10300CE	063380009010	**MAN8009**
2T1U10300CF	063380009010	**MAN8009**
3M5T10300AB	063377414010	**MAN7414**
3M5T10300AC	063377414010	**MAN7414**
3M5T10300KB	063377421010	**MAN7421**
3M5T10300KC	063377421010	**MAN7421**
3M5T10300LA	063377421010	**MAN7421**
3M5T10300LB	063377421010	**MAN7421**
3M5T10300LC	063377421010	**MAN7421**
3M5T10300NB	063377420010	**MAN7420**
3M5T10300NC	063377420010	**MAN7420**
3M5T10300XC	063377417010	**MAN7417**
3M5T10300XD	063377417010	**MAN7417**
3M5T10300YB	063377416010	**MAN7416**
3M5T10300YC	063377416010	**MAN7416**
3M5T10300YD	063377416010	**MAN7416**
3S5T10300AA	063380001010	**MAN8001**
3S6T10300AB	063380002010	**MAN8002**
3S6T10300AC	063380002010	**MAN8002**
4M5T10300AA	063377443010	**MAN7443**
4M5T10300AB	063377419010	**MAN7419**
4M5T10300BB	063377419010	**MAN7419**
4M5T10300BC	063377419010	**MAN7419**
4M5T10300CA	063377443010	**MAN7443**
4M5T10300CB	063377443010	**MAN7443**
4M5T10300CC	063377443010	**MAN7443**
4M5T10300LA	063377421010	**MAN7421**
4M5T10300LB	063377421010	**MAN7421**
4M5T10300LC	063377421010	**MAN7421**
4M5T10300UB	063377418010	**MAN7418**
4M5T10300UC	063377418010	**MAN7418**
4M5T10300UD	063377418010	**MAN7418**
65GB10300LA	063321347010	**MAN787**
76BB10300BB	063324145010	**MAN100**
76BB10300CA	054022581010	**MAN649**
76BB10300CA	063324145010	**MAN100**
76BB10300DA	054022581010	**MAN649**
76BB10300DA	063324145010	**MAN100**
76BB10300HA	063324145010	**MAN100**
76BB10300HB	063324145010	**MAN100**
76BB10300HD	054022581010	**MAN649**

CROSS REFERENCE	MAGNETI MARELLI	
	LONG	SHORT
FORD		
76BB10300HD	063324145010	**MAN100**
76BB10300HO	054022581010	**MAN649**
76BB10300HO	063324145010	**MAN100**
76BB10300KA	063324145010	**MAN100**
76BB10300KB	063324145010	**MAN100**
76BB10300KD	063324145010	**MAN100**
76BB10346KB	063324145010	**MAN100**
76BB10346KB	054022581010	**MAN649**
77FB 10300 KA	054022384010	**MAN653**
77FB10300KB	063324145010	**MAN100**
78FB10300AA	063324199010	**MAN107**
78FB10300AB	063324199010	**MAN107**
78FB10300BC	063324199010	**MAN107**
78FB10346AB	063324199010	**MAN107**
78GB10300HB	063324145010	**MAN100**
78GB10300JA	063324145010	**MAN100**
78GB10300JB	063324145010	**MAN100**
78GB10300JC	063324145010	**MAN100**
78GB10300JD	063324145010	**MAN100**
78GB10300KA	063324145010	**MAN100**
78GB10300LA	063324145010	**MAN100**
78GB10300M	063324145010	**MAN100**
78GB10300MA	063324145010	**MAN100**
78GB10300MB	063324145010	**MAN100**
79BB10300AC	054022384010	**MAN653**
79BB10300AD	054022384010	**MAN653**
80BB10300BA	063324145010	**MAN100**
80BB10300BB	063324145010	**MAN100**
80BB10300DA	063324145010	**MAN100**
80BB10300DB	063324145010	**MAN100**
80BB10300FA	063324145010	**MAN100**
80BB10300FB	063324145010	**MAN100**
81BB10300CA	063534892520	**MAN2035**
81BB10300CA	054022598010	**MAN666**
81BB10300DA	063324145010	**MAN100**
81BB10300EA	063324145010	**MAN100**
81BB10300FA	063324145010	**MAN100**
81GB10300AA	063324199010	**MAN107**
825F10300B2A	054022581010	**MAN649**
82AB10300BA	063324199010	**MAN107**
82BB10300BA	063324145010	**MAN100**
82BB10300CA	063534892520	**MAN2035**
82BB10300GA	054022598010	**MAN666**
82BB10300GA	063534892520	**MAN2035**

CROSS REFERENCE	MAGNETI MARELLI	
	LONG	SHORT
FORD		
82BB10300HA	054022581010	**MAN649**
82FB10300BB	054022581010	**MAN649**
82FB10300EA	054022581010	**MAN649**
82HF10300A2A	063324145010	**MAN100**
83BB10300HA	063324145010	**MAN100**
83BB10300HA	054022581010	**MAN649**
84AB 10300 AA	054022581010	**MAN649**
84AB10300MA	063324145010	**MAN100**
84AB10300MA	063534892520	**MAN2035**
84AB10300MB	063324145010	**MAN100**
84AB10300MB	063534892520	**MAN2035**
84AB10346MB	063534892520	**MAN2035**
84BB10300AA	063324145010	**MAN100**
84BB10300AB	063324145010	**MAN100**
84BB10300AB	054022581010	**MAN649**
84BX10300AB	063324145010	**MAN100**
84FB 10300 AA	054022598010	**MAN666**
84FB10300AB	063534892520	**MAN2035**
84FB10300KA	054022581010	**MAN649**
84FB10300MA	063324145010	**MAN100**
84FB10300MB	054022581010	**MAN649**
85BB10300FA	054022384010	**MAN653**
85BB10300GA	063534892520	**MAN2035**
85BB10300GA	054022598010	**MAN666**
864F10K359AF	063324264010	**MAN139**
864F10K359GC	063324264010	**MAN139**
864F10K659GC	063324264010	**MAN139**
86AB10300AA	063534892520	**MAN2035**
86AB10300AA	054022581010	**MAN649**
86AB10300AB	054022581010	**MAN649**
86AB10300AC	054022384010	**MAN653**
86AB10300A-DA	063324145010	**MAN100**
86AB10300A-DA	063534892520	**MAN2035**
86AB10300DB	054022581010	**MAN649**
86AB10300EB	054022581010	**MAN649**
86AB10300MA	054022604010	**MAN662**
86AB10300MB	054022604010	**MAN662**
86AX10300AB	054022581010	**MAN649**
86AX10300DB	054022581010	**MAN649**
86AX10300MB	054022604010	**MAN662**
86FB10300AA	063324145010	**MAN100**

CROSS REFERENCE	MAGNETI MARELLI	
	LONG	SHORT
FORD		
86FB10300AA	063534892520	MAN2035
86FB10300BA	063324145010	MAN100
86FB10300BA	063534892520	MAN2035
86VB10300AA	054022598010	MAN666
870G10300AA	063534892520	MAN2035
870G10300AA	054022598010	MAN666
87BB10300CA	054022581010	MAN649
87BB10300CB	054022581010	MAN649
87BB10300DA	054022581010	MAN649
87BB10300DB	054022581010	MAN649
87BX10300CB	054022581010	MAN649
884F10K359AA	063324264010	MAN139
884F10K359AB	063324264010	MAN139
884FX10K 359AB	063324264010	MAN139
88BB10300GA	054022581010	MAN649
88BB10300HA	054022581010	MAN649
88BB10300HB	054022581010	MAN649
88BB10300LA	054022581010	MAN649
894F10300BA	063324264010	MAN139
894X10300BA	063324264010	MAN139
89BB10300AA	054022581010	MAN649
89BB10300GB	054022581010	MAN649
89FF10300AB	054022598010	MAN666
89FF10300AC	054022598010	MAN666
89FF10300GA	054022598010	MAN666
89FF10300JA	054022585010	MAN652
89FF10300JB	054022585010	MAN652
89FX10300EB	054022585010	MAN652
91FF10300JA	063341695010	MAN833
91FF10300JB	063341695010	MAN833
924F10300AA	054022708010	MAN1018
924F10300AB	054022708010	MAN1018
924F10K 359AA	054022708010	MAN1018
924F10K 359AB	054022708010	MAN1018
924FX10K 359AA	054022708010	MAN1018
924X10300AB	054022708010	MAN1018
93BB10300FA	063341345010	MAN828
93BB10300FB	063341345010	MAN828
93BB10300FC	063341345010	MAN828
93BB10300FD	063341345010	MAN828
93BB10300FE	063341345010	MAN828

CROSS REFERENCE	MAGNETI MARELLI	
	LONG	SHORT
FORD		
93BB10300FF	063341345010	MAN828
93BBFF960 7260K	063341345010	MAN828
944F10300AA	063341345010	MAN828
94GB103 00BB	054022708010	MAN1018
94GB10K 359AC	054022708010	MAN1018
94GB10K 359AO	054022708010	MAN1018
954F10300AA	063341345010	MAN828
954F10300AA	054022708010	MAN1018
954F10K300AA	054022708010	MAN1018
954F10K359AA	054022708010	MAN1018
954F10K359AB	054022708010	MAN1018
95AB10300DC	063533100530	MAN2021
95FF10300AA	063341695010	MAN833
95FF10300AB	063341695010	MAN833
95FF10300AC	063341695010	MAN833
95FF10300AD	063341695010	MAN833
95GB10300LA	063341343010	MAN826
95GB10300LB	063341343010	MAN826
95GB10300MA	063341343010	MAN826
95GB10300MB	063341343010	MAN826
95VB10300BB	063341345010	MAN828
95VB10300BB	063321346010	MAN786
95VB10300BC	063321346010	MAN786
95VB10300BC	063341345010	MAN828
96AB103 00ADA	054022598010	MAN666
96FB 10300 DE	063533100540	MAN2022
96FF10300DC	063341730010	MAN938
97AB10300AB	063341730010	MAN938
97AB10300AC	063341730010	MAN938
97AB10300AD	063341730010	MAN938
97AB10300AE	063341730010	MAN938
97BB10300BB	063341345010	MAN828
97BB10300BC	063341345010	MAN828
97BB10300FD	063341345010	MAN828
97VW 10300 EA	063535150200	MAN2024
98AB10300BC	063377409010	MAN7409
98AB10300DC	063377409010	MAN7409
98AB10300DD	063377409010	MAN7409
98AB10300DE	063377409010	MAN7409

CROSS REFERENCE	MAGNETI MARELLI	
	LONG	SHORT
FORD		
98AB10300DG	063377409010	MAN7409
98AB10300DH	063377409010	MAN7409
98AB10300DJ	063377409010	MAN7409
98AB10300FC	063380006010	MAN8006
98AB10300GC	063377410010	MAN7410
98AB10300GC	063377411010	MAN7411
98AB10300GD	063377411010	MAN7411
98AB10300GD	063377410010	MAN7410
98AB10300GE	063377411010	MAN7411
98AB10300GE	063377410010	MAN7410
98AB10300GF	063377411010	MAN7411
98AB10300GG	063377410010	MAN7410
98AB10300GK	063377411010	MAN7411
98AB10300JA	063377412010	MAN7412
98AB10300JB	063377412010	MAN7412
98AB10300JD	063377412010	MAN7412
98AB10300JE	063377412010	MAN7412
98AB10300JF	063377412010	MAN7412
98AB10300JG	063377412010	MAN7412
98VW10300CA	063533250010	MAN2037
9S5110346AA	063377011010	MAN7011
9S5110346AB	063377011010	MAN7011
D924F10K 359AB	054022708010	MAN1018
D954F10K 359AA	063324264010	MAN139
D954F10K 359AB	063324264010	MAN139
DV94GB 10K359 AC	063324293010	MAN1023
DV94GB10 K359AC	063324293010	MAN1023
E6NN 10B 376 BA	054022384010	MAN653
F0NN10B 376CA	063324145010	MAN100
F2NN10B 376AA	063321347010	MAN787
MGB10 300JA	063324145010	MAN100
R84BX 10300 AB	054022581010	MAN649
R84BX 10300AB	063324145010	MAN100
R86AX10300AB	054022581010	MAN649

CROSS REFERENCE	MAGNETI MARELLI	
	LONG	SHORT
FORD		
R86AX10 300DB	054022581010	**MAN649**
R87BX10 300CB	054022581010	**MAN649**
R894FX10 300BA	063324264010	**MAN139**
R89F-F10300EB	054022585010	**MAN652**
R89F-F10300EC	054022585010	**MAN652**
R89FX10 300BA	063324264010	**MAN139**
R89FX10 300GB	054022598010	**MAN666**
R89FX103 00GB	063532614010	**MAN2614**
R91FF10300JA	063341695010	**MAN833**
R924F10300AA	054022708010	**MAN1018**
R924X10 300AB	054022708010	**MAN1018**
R93BB10300FF	063341345010	**MAN828**
R954F10300AA	054022708010	**MAN1018**
R954F10 K359AA	054022708010	**MAN1018**
R95FF10300AA	063341695010	**MAN833**
R95F-F10300AC	063341695010	**MAN833**
R95GB10 300MA	063341343010	**MAN826**
R95GB10 300MB	063341343010	**MAN826**
R95VB10 300BB	063321347010	**MAN787**
R95VB10 300BB	063341345010	**MAN828**
R98AB10 300JC	063377412010	**MAN7412**
RV946B10 300BB	063324293010	**MAN1023**
RV94GB10 300BB	063324293010	**MAN1023**
V88VG10 K359AA	063324264010	**MAN139**
V94GB10 300AA	063324293010	**MAN1023**

CROSS REFERENCE	MAGNETI MARELLI	
	LONG	SHORT
FORD		
V94GB10 300AA	063341345010	**MAN828**
V94GB10 300BA	063341345010	**MAN828**
V94GB10 300BB	063324293010	**MAN1023**
V94GB10 300BB	063341345010	**MAN828**
V94GB10 K359AB	063324293010	**MAN1023**
V94GB10 K359AC	063324293010	**MAN1023**
YC1T10300BH	063380007010	**MAN8007**
YC1T10300BJ	063380007010	**MAN8007**
YC1U10300AC	063380007010	**MAN8007**
YC1U10300AD	063380007010	**MAN8007**
YC1U10300AE	063380007010	**MAN8007**
YC1U-10300DA	063380007010	**MAN8007**
YC1U10 300DB	063380007010	**MAN8007**
YC1U10 300EA	063380007010	**MAN8007**
YC1U10 300EB	063380007010	**MAN8007**
YS6110300BB	063341711010	**MAN1142**
YS6110300BD	063341711010	**MAN1142**
YS6110300BF	063341711010	**MAN1142**
YS6110300CA	063341758010	**MAN1143**
YS6110300CC	063341758010	**MAN1143**
YS6110300DA	063341778010	**MAN1155**
YS6110300DB	063341778010	**MAN1155**
FRIESEN		
9030760	054022384010	**MAN653**
9030780	054022581010	**MAN649**
9030880	063534881590	**MAN2012**
9030970	063321042010	**MAN283**
9030970	063321041010	**MAN284**
9031340	063320025010	**MAN261**
9032151	063341454010	**MAN1014**
9032341	063341454010	**MAN1014**
9033250	063321409010	**MAN909**
9033250	063321156010	**MAN323**
9033810	063534893260	**MAN2017**
9033860	054022581010	**MAN649**

CROSS REFERENCE	MAGNETI MARELLI	
	LONG	SHORT
FRIESEN		
9033880	063321042010	**MAN283**
9033890	063321112010	**MAN379**
9034470	054022604010	**MAN662**
9035630	063321019010	**MAN274**
9035630	063320049010	**MAN771**
9035641	063321067010	**MAN300**
9035641	063321000010	**MAN342**
9035760	063321044010	**MAN286**
9036060	054022598010	**MAN666**
9036191	054022585010	**MAN652**
9036631	063324264010	**MAN139**
9036631	054022708010	**MAN1018**
9036631	063324293010	**MAN1023**
9036701	063341695010	**MAN833**
9036750	063321062010	**MAN298**
9036750	063321152010	**MAN327**
9036750	063321154010	**MAN344**
9036780	063321395010	**MAN782**
9037120	063321017010	**MAN352**
9037130	063321156010	**MAN323**
9037160	063321157010	**MAN322**
9038621	063321173010	**MAN331**
9039471	063321600010	**MAN640**
9039471	063321173010	**MAN331**
9039501	063321165010	**MAN382**
9039510	063533100540	**MAN2022**
9039881	063324293010	**MAN1023**
9039891	063341343010	**MAN826**
9040621	063321328010	**MAN784**
9040631	063321800010	**MAN1104**
9040631	063321803010	**MAN1100**
9040641	063321802010	**MAN1102**
9040641	063321858010	**MAN1116**
9040641	063321859010	**MAN1117**
9040651	063321607010	**MAN800**
9041300	063535150200	**MAN2024**
9041381	063388505010	**MAN966**
9043680	063533479010	**MAN2801**
9045270	063534150080	**MAN2029**
9045370	063533251000	**MAN2028**
9046090	063321836010	**MAN1121**
9046210	063535250200	**MAN2031**
9051296	063377440010	**MAN7440**
9051527	063532615010	**MAN2615**
9051532	063532623010	**MAN2623**

CROSS REFERENCE	MAGNETI MARELLI	
	LONG	SHORT
FRIESEN		
9060305	063532621010	**MAN2621**
9060501	063532608010	**MAN2608**
9060503	063532603010	**MAN2603**
9060506	063532609010	**MAN2609**
9060514	063532613010	**MAN2613**
9060906	063532631010	**MAN2631**
9060908	063532620010	**MAN2620**
9062108	063377439010	**MAN7439**
9090026	063321858010	**MAN1116**
9090027	063341345010	**MAN828**
9090031	063321617010	**MAN809**
9090040	063377410010	**MAN7410**
9090041	063341730010	**MAN938**
9090047	063532611010	**MAN2611**
9090067	063321747010	**MAN1041**
9090067	063321600010	**MAN640**
9090067	063321616010	**MAN808**
9090071	063321604010	**MAN798**
9090071	063321615010	**MAN807**
9090076	063377409010	**MAN7409**
9090077	063377412010	**MAN7412**
9090086	063341658010	**MAN1009**
9090086	063341896010	**MAN1170**
9090090	063341702010	**MAN1008**
9090092	063321625010	**MAN645**
9090096	063321391010	**MAN789**
9090105	063321402010	**MAN791**
9090129	063532637010	**MAN2637**
9090133	063321618010	**MAN810**
9090143	063532250200	**MAN2027**
9090157	063532636010	**MAN2636**
9090173	063341658010	**MAN1009**
9090177	063380006010	**MAN8006**
9090177	063380005010	**MAN8005**
9090188	063377008010	**MAN7008**
9090188	063377002010	**MAN7002**
9090190	063321760010	**MAN1125**
9090191	063377010010	**MAN7010**
9090194	063377006010	**MAN7006**
9090206	063377005010	**MAN7005**
9090207	063377004010	**MAN7004**
9090215	063321763010	**MAN1171**
9090216	063321620010	**MAN811**
9090216	063321617010	**MAN809**
9090218	063321715010	**MAN1039**

CROSS REFERENCE	MAGNETI MARELLI	
	LONG	SHORT
FRIESEN		
9090322	063377007010	**MAN7007**
9090334	063321819010	**MAN1110**
9090354	063532622010	**MAN2622**
9090395	063532624010	**MAN2624**
9090444	063532604010	**MAN2604**
9090444	063532625010	**MAN2625**
9931260	063534897070	**MAN2019**
9931340	063320060010	**MAN772**
9932191	063320025010	**MAN261**
9932720	063534696430	**MAN2010**
9933330	063534897070	**MAN2019**
9937410	063534699820	**MAN2011**
9937890	063534881850	**MAN2013**
9939130	063534690480	**MAN2009**
9939340	063534681240	**MAN2006**
9941960	063533200010	**MAN2001**
9941970	063533155000	**MAN2023**
9942590	063535255010	**MAN2026**
9942820	063535150440	**MAN2030**
9945160	063535550050	**MAN2003**
9945170	063535255000	**MAN2025**
9990439	063531446220	**MAN2033**
HC-PARTS		
CA1029IR	063324264010	**MAN139**
CA1031IR	054022708010	**MAN1018**
CA1039IR	063388505010	**MAN966**
CA1053IR	063534150080	**MAN2029**
CA1083IR	063341695010	**MAN833**
CA1084IR	063321615010	**MAN807**
CA1085IR	063341343010	**MAN826**
CA1153IR	063321747010	**MAN1041**
CA1153IR	063321604010	**MAN798**
CA1154IR	063321600010	**MAN640**
CA1159IR	063321810010	**MAN1147**
CA1160IR	063321839010	**MAN1119**
CA1161IR	063321332010	**MAN642**
CA1189IR	063321800010	**MAN1104**
CA1189IR	063321803010	**MAN1100**
CA1196IR	063321625010	**MAN645**
CA1199IR	063321854010	**MAN955**
CA1199IR	063321332010	**MAN642**
CA1208IR	063321800010	**MAN1104**
CA1208IR	063321729010	**MAN1107**
CA1216IR	063321802010	**MAN1102**
CA1216IR	063321858010	**MAN1116**

CROSS REFERENCE	MAGNETI MARELLI	
	LONG	SHORT
HC-PARTS		
CA1217IR	063341730010	**MAN938**
CA1219IR	063321340010	**MAN646**
CA1220IR	063321607010	**MAN800**
CA1221IR	063321328010	**MAN784**
CA1222IR	063321402010	**MAN791**
CA1223IR	063321859010	**MAN1117**
CA1223IR	063321729010	**MAN1107**
CA1230IR	063321347010	**MAN787**
CA1230IR	063341345010	**MAN828**
CA1230IR	063321346010	**MAN786**
CA1257IR	063532250220	**MAN2036**
CA1258IR	063321617010	**MAN809**
CA1260IR	063535150200	**MAN2024**
CA127IR	063321154010	**MAN344**
CA127IR	063321155010	**MAN320**
CA128IR	063534881590	**MAN2012**
CA129IR	063321112010	**MAN379**
CA129IR	063321409010	**MAN909**
CA1311IR	063321859010	**MAN1117**
CA1313IR	063321810010	**MAN1147**
CA1313IR	063321813010	**MAN1151**
CA1336IR	063534690480	**MAN2009**
CA1340IR	063377410010	**MAN7410**
CA1340IR	063377411010	**MAN7411**
CA1345IR	063310506010	**MAN956**
CA1348IR	063321391010	**MAN789**
CA1349IR	063321605010	**MAN939**
CA1350IR	063321715010	**MAN1039**
CA1435IR	063321112010	**MAN379**
CA1435IR	063321409010	**MAN909**
CA1437IR	063321391010	**MAN789**
CA1438IR	063534681240	**MAN2006**
CA1446IR	063533250010	**MAN2037**
CA1448IR	063534882530	**MAN2015**
CA1471IR	063533250580	**MAN2002**
CA1475IR	063377413010	**MAN7413**
CA1475IR	063377412010	**MAN7412**
CA1483IR	063377409010	**MAN7409**
CA1494IR	054022656010	**MAN766**
CA1499IR	063341734010	**MAN1166**
CA1542IR	063533250130	**MAN2038**
CA1556IR	063533155000	**MAN2023**
CA1557IR	063533200010	**MAN2001**
CA1558IR	063321859010	**MAN1117**
CA1558IR	063321826010	**MAN1127**

CROSS REFERENCE	MAGNETI MARELLI	
	LONG	SHORT
HC-PARTS		
CA1565IR	063321620010	MAN811
CA1581IR	063534150080	MAN2029
CA1589IR	063321734010	MAN963
CA1625IR	063341896010	MAN1170
CA1635IR	063380004010	MAN8004
CA1638IR	063380006010	MAN8006
CA1638IR	063380005010	MAN8005
CA1639IR	063380007010	MAN8007
CA1643IR	063310508010	MAN958
CA1648IR	063533250590	MAN2040
CA1648IR	063534150120	MAN2042
CA1649IR	063341711010	MAN1142
CA1665IR	063377300010	MAN7300
CA1671IR	063532636010	MAN2636
CA1679IR	063535150440	MAN2030
CA1697IR	063321819010	MAN1110
CA1697IR	063321859010	MAN1117
CA1699IR	063535550050	MAN2003
CA1700IR	063533250530	MAN2039
CA1742IR	063377010010	MAN7010
CA1742IR	063377013010	MAN7013
CA1743IR	063321836010	MAN1121
CA1745IR	063532637010	MAN2637
CA1748IR	063534150230	MAN2043
CA1758IR	063380001010	MAN8001
CA1760IR	063341758010	MAN1143
CA1766IR	063377002010	MAN7002
CA1766IR	063377006010	MAN7006
CA1772IR	063341778010	MAN1155
CA1777IR	063380002010	MAN8002
CA1779IR	063533251000	MAN2028
CA1779IR	063380007010	MAN8007
CA1812IR	063536550050	MAN2045
CA1830IR	063321763010	MAN1171
CA1830IR	063321761010	MAN1150
CA1834IR	063377416010	MAN7416
CA1837IR	063535250200	MAN2031
CA1844IR	063377001010	MAN7001
CA1855IR	063358062010	MAN1098
CA1856IR	063358062010	MAN1098
CA1857IR	063380009010	MAN8009
CA1857IR	063380010010	MAN8010
CA1857IR	063380008010	MAN8008
CA1862IR	063358061010	MAN1097
CA1883IR	063536550080	MAN2032

CROSS REFERENCE	MAGNETI MARELLI	
	LONG	SHORT
HC-PARTS		
CA1885IR	063377490010	MAN7490
CA1885IR	063377004010	MAN7004
CA1886IR	063377011010	MAN7011
CA1890IR	063377491010	MAN7491
CA190IR	063324145010	MAN100
CA1915IR	063533251220	MAN2041
CA1931IR	063377420010	MAN7420
CA1934IR	063377494010	MAN7494
CA1935IR	063377028010	MAN7028
CA1935IR	063377495010	MAN7495
CA1955IR	063377423010	MAN7423
CA1956IR	063377424010	MAN7424
CA1973IR	063377423010	MAN7423
CA1987IR	063377425010	MAN7425
CA1995IR	063377005010	MAN7005
CA1998IR	063377007010	MAN7007
CA1998IR	063377009010	MAN7009
CA1999IR	063377418010	MAN7418
CA2018IR	063532622010	MAN2622
CA2034IR	063380001010	MAN8001
CA2040IR	063535255000	MAN2025
CA212IR	063304087010	MAN873
CA212IR	063320025010	MAN261
CA226IR	054022384010	MAN653
CA226IR	063534892520	MAN2035
CA227IR	063534696430	MAN2010
CA255IR	063321044010	MAN286
CA263IR	063534893260	MAN2017
CA293IR	063324145010	MAN100
CA306IR	063534892520	MAN2035
CA316IR	063321041010	MAN284
CA316IR	063321021010	MAN354
CA345IR	063534893260	MAN2017
CA355IR	063320049010	MAN771
CA506IR	063321152010	MAN327
CA506IR	063321087010	MAN370
CA506IR	063321062010	MAN298
CA513IR	063534881590	MAN2012
CA572IR	063321067010	MAN300
CA596IR	063321157010	MAN322
CA596IR	063321156010	MAN323
CA600IR	063324157010	MAN102
CA60IR	063324145010	MAN100
CA642IR	063321044010	MAN286
CA644IR	063321191010	MAN330

CROSS REFERENCE	MAGNETI MARELLI	
	LONG	SHORT
HC-PARTS		
CA717IR	054022585010	MAN652
CA719IR	054022708010	MAN1018
CA749IR	063534696430	MAN2010
CA856IR	063341695010	MAN833
CA890IR	063321600010	MAN640
CA890IR	063321173010	MAN331
CA893IR	063321165010	MAN382
CA94IR	063324145010	MAN100
JA1539IR	063532617010	MAN2617
JA1708IR	063532622010	MAN2622
JA1795IR	063532621010	MAN2621
JA664IR	063532615010	MAN2615
JA671IR	063532615010	MAN2615
JA684IR	063532623010	MAN2623
HELLA		
8EL 011 360-051	063533250010	MAN2037
8EL 011 360-151	063358061010	MAN1097
8EL 725 573-001	063321011010	MAN349
8EL 725 573-001	063321409010	MAN909
8EL 725 580-001	063324157010	MAN102
8EL 725 580-001	054022384010	MAN653
8EL 725 581-001	063321155010	MAN320
8EL 725 581-001	063321154010	MAN344
8EL 725 582-001	063534881590	MAN2012
8EL 725 583-001	063321112010	MAN379
8EL 725 583-001	063321409010	MAN909
8EL 725 630-001	063324145010	MAN100
8EL 725 640-001	063304087010	MAN873
8EL 725 640-001	063320025010	MAN261
8EL 725 648-001	063534892520	MAN2035

CROSS REFERENCE	MAGNETI MARELLI	
	LONG	SHORT
HELLA		
8EL 725 662-001	063534881850	**MAN2013**
8EL 725 673-001	063321042010	**MAN283**
8EL 725 673-001	063321044010	**MAN286**
8EL 725 694-001	063324145010	**MAN100**
8EL 725 700-001	054022585010	**MAN652**
8EL 725 707-001	063324157010	**MAN102**
8EL 725 707-001	054022384010	**MAN653**
8EL 725 708-001	063324145010	**MAN100**
8EL 725 709-001	063341454010	**MAN1014**
8EL 725 713-001	063324264010	**MAN139**
8EL 725 718-001	063321042010	**MAN283**
8EL 725 718-001	063321041010	**MAN284**
8EL 725 727-001	054022604010	**MAN662**
8EL 725 736-001	063534699820	**MAN2011**
8EL 725 754-001	063321067010	**MAN300**
8EL 725 754-001	063321000010	**MAN342**
8EL 725 757-001	063320049010	**MAN771**
8EL 725 759-001	063320049010	**MAN771**
8EL 725 805-001	063321087010	**MAN370**
8EL 725 805-001	063321152010	**MAN327**
8EL 725 812-001	063534881590	**MAN2012**
8EL 725 820-001	063534893700	**MAN2018**

CROSS REFERENCE	MAGNETI MARELLI	
	LONG	SHORT
HELLA		
8EL 725 852-001	054022598010	**MAN666**
8EL 725 852-001	063324157010	**MAN102**
8EL 725 855-001	054022656010	**MAN766**
8EL 725 855-001	063324157010	**MAN102**
8EL 725 861-001	063321067010	**MAN300**
8EL 725 877-001	054022581010	**MAN649**
8EL 725 879-001	063321156010	**MAN323**
8EL 725 879-001	063321157010	**MAN322**
8EL 725 881-001	063324145010	**MAN100**
8EL 725 882-001	063324157010	**MAN102**
8EL 725 882-001	054022656010	**MAN766**
8EL 725 883-001	063321191010	**MAN330**
8EL 725 883-001	063321017010	**MAN352**
8EL 725 894-001	063324264010	**MAN139**
8EL 725 913-001	063324157010	**MAN102**
8EL 725 926-001	063321044010	**MAN286**
8EL 725 928-001	063321191010	**MAN330**
8EL 725 944-001	063321155010	**MAN320**
8EL 725 957-001	063324145010	**MAN100**
8EL 725 958-001	054022384010	**MAN653**
8EL 726 363-001	063532605010	**MAN2605**
8EL 726 386-001	063532615010	**MAN2615**

CROSS REFERENCE	MAGNETI MARELLI	
	LONG	SHORT
HELLA		
8EL 730 017-001	054022708010	**MAN1018**
8EL 730 017-001	063324293010	**MAN1023**
8EL 730 025-001	063321395010	**MAN782**
8EL 730 036-001	054022585010	**MAN652**
8EL 730 067-001	063532623010	**MAN2623**
8EL 731 695-001	063321157010	**MAN322**
8EL 731 712-001	063321173010	**MAN331**
8EL 731 717-001	063341695010	**MAN833**
8EL 731 724-001	063321600010	**MAN640**
8EL 731 724-001	063321173010	**MAN331**
8EL 731 725-001	063321347010	**MAN787**
8EL 731 727-001	063321165010	**MAN382**
8EL 732 701-001	063324264010	**MAN139**
8EL 732 703-001	054022708010	**MAN1018**
8EL 732 703-001	063324293010	**MAN1023**
8EL 732 709-001	063533100530	**MAN2021**
8EL 732 711-001	063388505010	**MAN966**
8EL 737 003-001	063534150080	**MAN2029**
8EL 737 003-001	063533479010	**MAN2801**
8EL 737 032-001	063341695010	**MAN833**
8EL 737 033-001	063321615010	**MAN807**
8EL 737 034-001	063341343010	**MAN826**

CROSS REFERENCE	MAGNETI MARELLI	
	LONG	SHORT
HELLA		
8EL 737 036-001	063533100540	MAN2022
8EL 737 068-001	063532611010	MAN2611
8EL 737 200-001	063321747010	MAN1041
8EL 737 200-001	063321604010	MAN798
8EL 737 201-001	063321600010	MAN640
8EL 737 201-001	063321604010	MAN798
8EL 737 206-001	063321810010	MAN1147
8EL 737 207-001	063321839010	MAN1119
8EL 737 208-001	063321332010	MAN642
8EL 737 209-001	063321800010	MAN1104
8EL 737 209-001	063321803010	MAN1100
8EL 737 216-001	063321625010	MAN645
8EL 737 219-001	063321485010	MAN1021
8EL 737 219-001	063321854010	MAN955
8EL 737 282-001	063321800010	MAN1104
8EL 737 282-001	063321729010	MAN1107
8EL 737 284-001	063321802010	MAN1102
8EL 737 284-001	063321729010	MAN1107
8EL 737 285-001	063341730010	MAN938
8EL 737 287-001	063321340010	MAN646
8EL 737 295-001	063321607010	MAN800
8EL 737 295-001	063321606010	MAN799

CROSS REFERENCE	MAGNETI MARELLI	
	LONG	SHORT
HELLA		
8EL 737 296-001	063321328010	MAN784
8EL 737 297-001	063321402010	MAN791
8EL 737 298-001	063321858010	MAN1116
8EL 737 298-001	063321859010	MAN1117
8EL 737 307-001	063324157010	MAN102
8EL 737 343-001	063341345010	MAN828
8EL 737 359-001	063321395010	MAN782
8EL 737 360-001	063321395010	MAN782
8EL 737 405-001	063321617010	MAN809
8EL 737 405-001	063321620010	MAN811
8EL 737 423-001	063535150200	MAN2024
8EL 737 453-001	063321859010	MAN1117
8EL 737 457-001	063321810010	MAN1147
8EL 737 457-001	063321813010	MAN1151
8EL 737 529-001	063377410010	MAN7410
8EL 737 529-001	063377411010	MAN7411
8EL 737 549-001	063321391010	MAN789
8EL 737 551-001	063321605010	MAN939
8EL 737 552-001	063321715010	MAN1039
8EL 737 556-001	063532605010	MAN2605
8EL 737 619-001	063321112010	MAN379
8EL 737 619-001	063321409010	MAN909

CROSS REFERENCE	MAGNETI MARELLI	
	LONG	SHORT
HELLA		
8EL 737 632-001	063321391010	MAN789
8EL 737 633-001	063534681240	MAN2006
8EL 737 644-001	063533250010	MAN2037
8EL 737 661-001	063534681400	MAN2007
8EL 737 679-001	063533250580	MAN2002
8EL 737 689-001	063377413010	MAN7413
8EL 737 689-001	063377412010	MAN7412
8EL 737 711-001	063377409010	MAN7409
8EL 737 740-001	054022656010	MAN766
8EL 737 747-001	063533350070	MAN2005
8EL 737 749-001	063341734010	MAN1166
8EL 737 772-001	063532608010	MAN2608
8EL 737 801-001	054022604010	MAN662
8EL 737 812-001	063321826010	MAN1127
8EL 737 812-001	063321859010	MAN1117
8EL 737 829-001	063321620010	MAN811
8EL 737 861-001	063534150080	MAN2029
8EL 737 874-001	063321734010	MAN963
8EL 737 917-001	063532629010	MAN2629
8EL 737 917-001	063532620010	MAN2620
8EL 737 926-001	063380004010	MAN8004
8EL 737 929-001	063380006010	MAN8006

CROSS REFERENCE	MAGNETI MARELLI	
	LONG	SHORT
HELLA		
8EL 737 929-001	063380005010	**MAN8005**
8EL 737 931-001	063341740010	**MAN1163**
8EL 737 932-001	063341740010	**MAN1163**
8EL 737 935-001	063310508010	**MAN958**
8EL 737 947-001	063321605010	**MAN939**
8EL 737 956-001	063534150120	**MAN2042**
8EL 737 957-001	063341711010	**MAN1142**
8EL 737 985-001	063535255010	**MAN2026**
8EL 737 987-001	063377300010	**MAN7300**
8EL 737 997-001	063532636010	**MAN2636**
8EL 737 998-001	063532637010	**MAN2637**
8EL 738 018-001	063532604010	**MAN2604**
8EL 738 018-001	063532625010	**MAN2625**
8EL 738 058-001	063321819010	**MAN1110**
8EL 738 058-001	063321859010	**MAN1117**
8EL 738 065-001	063536250020	**MAN2044**
8EL 738 072-001	063532622010	**MAN2622**
8EL 738 073-001	063532624010	**MAN2624**
8EL 738 086-001	063532609010	**MAN2609**
8EL 738 099-001	063377010010	**MAN7010**
8EL 738 099-001	063377013010	**MAN7013**
8EL 738 100-001	063321836010	**MAN1121**

CROSS REFERENCE	MAGNETI MARELLI	
	LONG	SHORT
HELLA		
8EL 738 102-001	063532613010	**MAN2613**
8EL 738 103-001	063532603010	**MAN2603**
8EL 738 104-001	063532606010	**MAN2606**
8EL 738 114-001	063532637010	**MAN2637**
8EL 738 117-001	063534150230	**MAN2043**
8EL 738 134-001	063380001010	**MAN8001**
8EL 738 141-001	063341758010	**MAN1143**
8EL 738 161-001	063377008010	**MAN7008**
8EL 738 161-001	063377006010	**MAN7006**
8EL 738 161-001	063377002010	**MAN7002**
8EL 738 187-001	063380002010	**MAN8002**
8EL 738 189-001	063533251000	**MAN2028**
8EL 738 189-001	063380007010	**MAN8007**
8EL 738 195-001	063536550050	**MAN2045**
8EL 738 208-001	063532602010	**MAN2602**
8EL 738 211-031	063358062010	**MAN1098**
8EL 738 211-081	063358062010	**MAN1098**
8EL 738 211-081	063358061010	**MAN1097**
8EL 738 211-151	063358061010	**MAN1097**
8EL 738 211-291	063532627010	**MAN2627**
8EL 738 211-321	063321763010	**MAN1171**
8EL 738 211-321	063321761010	**MAN1150**

CROSS REFERENCE	MAGNETI MARELLI	
	LONG	SHORT
HELLA		
8EL 738 211-381	063380008010	**MAN8008**
8EL 738 211-381	063380009010	**MAN8009**
8EL 738 211-381	063380010010	**MAN8010**
8EL 738 211-621	063377492010	**MAN7492**
8EL 738 211-631	063377004010	**MAN7004**
8EL 738 211-631	063377490010	**MAN7490**
8EL 738 211-641	063377011010	**MAN7011**
8EL 738 211-641	063321747010	**MAN1041**
8EL 738 212-231	063377494010	**MAN7494**
8EL 738 212-311	063380001010	**MAN8001**
8EL 738 212-321	063377005010	**MAN7005**
8EL 738 212-421	063532250200	**MAN2027**
8EL 738 229-001	063532621010	**MAN2621**
8EL 738 238-001	063532628010	**MAN2628**
8EL 738 238-001	063532612010	**MAN2612**
8EL 749 555-001	063377001010	**MAN7001**
8EL 749 555-001	063321600010	**MAN640**
HERTH+BUSS ELPARTS		
32000903	063380001010	**MAN8001**
32001005	063380006010	**MAN8006**
32001005	063380005010	**MAN8005**
32001008	063380010010	**MAN8010**
32001008	063380009010	**MAN8009**
32001008	063380008010	**MAN8008**
32001207	063324264010	**MAN139**
32001240	063533479010	**MAN2801**
32030760	054022384010	**MAN653**

CROSS REFERENCE	MAGNETI MARELLI	
	LONG	SHORT
HERTH+BUSS ELPARTS		
32031260	063534897070	**MAN2019**
32033860	063534892520	**MAN2035**
32033860	063324145010	**MAN100**
32033890	063321042010	**MAN283**
32033890	063321112010	**MAN379**
32033890	063321041010	**MAN284**
32034400	063534699820	**MAN2011**
32035630	063320049010	**MAN771**
32036010	063324145010	**MAN100**
32036060	054022598010	**MAN666**
32036060	063532614010	**MAN2614**
32036198	054022585010	**MAN652**
32036631	054022708010	**MAN1018**
32036690	063341695010	**MAN833**
32036701	063341695010	**MAN833**
32037130	063321157010	**MAN322**
32037130	063321156010	**MAN323**
32037160	063321157010	**MAN322**
32037890	063534881850	**MAN2013**
32038990	063533100530	**MAN2021**
32039130	063534690480	**MAN2009**
32039240	063533479010	**MAN2801**
32039471	063321600010	**MAN640**
32039471	063321173010	**MAN331**
32040691	063321839010	**MAN1119**
32041260	063532250220	**MAN2036**
32041300	063535150200	**MAN2024**
32041381	063388505010	**MAN966**
32042000	063533250580	**MAN2002**
32044631	063341730010	**MAN938**
32044651	063377412010	**MAN7412**
32044651	063377414010	**MAN7414**
32045370	063533251000	**MAN2028**
32045370	063380007010	**MAN8007**
32045420	063536250020	**MAN2044**
32063398	063380006010	**MAN8006**
32063398	063380005010	**MAN8005**
32118710	063377416010	**MAN7416**
32118720	063377417010	**MAN7417**
32118730	063377418010	**MAN7418**
32118740	063377419010	**MAN7419**
32118740	063377443010	**MAN7443**
32118750	063377420010	**MAN7420**
32118920	063377421010	**MAN7421**
32118930	063377443010	**MAN7443**

CROSS REFERENCE	MAGNETI MARELLI	
	LONG	SHORT
HERTH+BUSS ELPARTS		
32118930	063377419010	**MAN7419**
32118950	063377423010	**MAN7423**
32118950	063358062010	**MAN1098**
32118960	063377424010	**MAN7424**
32118970	063377495010	**MAN7495**
32118970	063377425010	**MAN7425**
32121242	063534881590	**MAN2012**
32201695	063321600010	**MAN640**
32320001	063321067010	**MAN300**
32320001	063321000010	**MAN342**
32320001	063321173010	**MAN331**
32320042	063321152010	**MAN327**
32320042	063321154010	**MAN344**
32320042	063321087010	**MAN370**
32321077	063321017010	**MAN352**
32321295	063321606010	**MAN799**
32321295	063321607010	**MAN800**
32377490	063377490010	**MAN7490**
32377491	063377491010	**MAN7491**
32437349	063310508010	**MAN958**
32437453	063380001010	**MAN8001**
32437504	063377494010	**MAN7494**
32437504	063358061010	**MAN1097**
32469572	054022604010	**MAN662**
32680806	063321112010	**MAN379**
32680806	063321155010	**MAN320**
32680806	063321154010	**MAN344**
32680806	063321157010	**MAN322**
32997550	063534696430	**MAN2010**
35000195	063341343010	**MAN826**
HERTH+BUSS JAKOPARTS		
J5110308	063532607010	**MAN2607**
J5110500	063532611010	**MAN2611**
J5110501	063532608010	**MAN2608**
J5110503	063532603010	**MAN2603**
J5110506	063532609010	**MAN2609**
J5110508	063532605010	**MAN2605**
J5110514	063532613010	**MAN2613**
J5110519	063532622010	**MAN2622**
J5110520	063532627010	**MAN2627**
J5110524	063532624010	**MAN2624**
J5110526	063532606010	**MAN2606**
J5110906	063532631010	**MAN2631**
J5113021	063532619010	**MAN2619**
J5115027	063532615010	**MAN2615**

CROSS REFERENCE	MAGNETI MARELLI	
	LONG	SHORT
HERTH+BUSS JAKOPARTS		
J5115027	063532623010	**MAN2623**
J5115032	063532623010	**MAN2623**
J5118024	063358061010	**MAN1097**
HYUNDAI		
37300-02503	063532613010	**MAN2613**
37300-02503AT	063532613010	**MAN2613**
37300-02550	063532612010	**MAN2612**
37300-02550	063532628010	**MAN2628**
37300-02551	063532612010	**MAN2612**
37300-02551	063532628010	**MAN2628**
37300-22200	063532611010	**MAN2611**
37300-22650	063532602010	**MAN2602**
37300-23600	063532602010	**MAN2602**
37300-27010	063532622010	**MAN2622**
37300-27011	063532622010	**MAN2622**
37300-27012	063532622010	**MAN2622**
37300-27013	063532622010	**MAN2622**
37300-27020	063532622010	**MAN2622**
37300-32800	063532623010	**MAN2623**
37300-33010	063532615010	**MAN2615**
37300-33013	063532615010	**MAN2615**
37300-33030	063532615010	**MAN2615**
37300-33100	063532623010	**MAN2623**
37300-33101	063532623010	**MAN2623**
37300-33103	063532623010	**MAN2623**
37300-39800	063532618010	**MAN2618**
37300-42114	063532605010	**MAN2605**
37300-42203	063532605010	**MAN2605**
37300-42204	063532605010	**MAN2605**
37300-42206	063532605010	**MAN2605**
37300-42354	063532608010	**MAN2608**
37300-42355	063532608010	**MAN2608**
37300-42356	063532608010	**MAN2608**
37300-42356AT	063532608010	**MAN2608**
37300-42452	063532609010	**MAN2609**
37300-42453	063532609010	**MAN2609**
37300-42454	063532609010	**MAN2609**
37300-42455	063532609010	**MAN2609**
37300-42455AT	063532609010	**MAN2609**
37300-42456	063532609010	**MAN2609**
37300-42502	063532625010	**MAN2625**
37300-42542	063532606010	**MAN2606**

CROSS REFERENCE	MAGNETI MARELLI	
	LONG	SHORT
HYUNDAI		
37300-42620	063532604010	**MAN2604**
37300-42621	063532604010	**MAN2604**
37300-42804	063532605010	**MAN2605**
37300-42860	063532606010	**MAN2606**
37300-42870	063532606010	**MAN2606**
37300-42Q10	063532605010	**MAN2605**
37300-47500	063532603010	**MAN2603**
37300-47501	063532603010	**MAN2603**
37300-4A111	063532627010	**MAN2627**
37300-4A113	063532627010	**MAN2627**
37300-4X000	063532601010	**MAN2601**
37300-4X001	063532601010	**MAN2601**
37300-4X002	063532601010	**MAN2601**
37300-4X003	063532601010	**MAN2601**
37300-4X500	063532624010	**MAN2624**
37300-4X500	063532601010	**MAN2601**
37300-4X501	063532624010	**MAN2624**
37300-4X501	063532601010	**MAN2601**
37300-4X502	063532624010	**MAN2624**
37300-4X502	063532601010	**MAN2601**
37300-4X503	063532601010	**MAN2601**
37300-4X503	063532624010	**MAN2624**
ISKRA		
IA 0055	063320060010	**MAN772**
IA 0069	063534897070	**MAN2019**
IA 0226	063534881850	**MAN2013**
IA 0306	063321409010	**MAN909**
IA 0327	063321041010	**MAN284**
IA 0327	063321021010	**MAN354**
IA 0328	063320049010	**MAN771**
IA 0329	063320049010	**MAN771**
IA 0347	063341454010	**MAN1014**
IA 0355	063321165010	**MAN382**
IA 0358	063321067010	**MAN300**
IA 0405	063321155010	**MAN320**
IA 0437	063534893700	**MAN2018**
IA 0571	063321112010	**MAN379**
IA 0571	063321409010	**MAN909**
IA 0582	063321112010	**MAN379**
IA 0582	063321409010	**MAN909**
IA 0585	063321044010	**MAN286**
IA 0591	063321152010	**MAN327**
IA 0591	063321087010	**MAN370**
IA 0606	063534893700	**MAN2018**
IA 0679	063533350070	**MAN2005**

CROSS REFERENCE	MAGNETI MARELLI	
	LONG	SHORT
ISKRA		
IA 0694	063321839010	**MAN1119**
IA 0696	063321017010	**MAN352**
IA 0697	063321157010	**MAN322**
IA 0698	063321156010	**MAN323**
IA 0699	063321152010	**MAN327**
IA 0699	063321087010	**MAN370**
IA 0701	063321062010	**MAN298**
IA 0759	063534882060	**MAN2014**
IA 0801	063534696430	**MAN2010**
IA 0810	054022384010	**MAN653**
IA 1020	063321753010	**MAN1172**
IA 1146	063533250010	**MAN2037**
IA 1223	063341734010	**MAN1166**
IA 1341	063321734010	**MAN963**
IA 9025	063341730010	**MAN938**
IA 9025	054022585010	**MAN652**
IA 9029	063321600010	**MAN640**
IA 9029	063321173010	**MAN331**
IA 9030	063321810010	**MAN1147**
IA 9406	063534699820	**MAN2011**
IA 9419	063534696430	**MAN2010**
IA 9423	063534690480	**MAN2009**
IA 9426	063533479010	**MAN2801**
IA 9432	063534681240	**MAN2006**
IA 9435	063536895380	**MAN2004**
IAJ0004	063532611010	**MAN2611**
IAJ0010	063532634010	**MAN2634**
IAJ0016	063532621010	**MAN2621**
IAJ0017	063532615010	**MAN2615**
IAJ0017	063532623010	**MAN2623**
IAJ0032	063532613010	**MAN2613**
IAJ0039	063532622010	**MAN2622**
IAJ0050	063532606010	**MAN2606**
IAJ0058	063532603010	**MAN2603**
IAJ0101	063532609010	**MAN2609**
IAJ0104	063532631010	**MAN2631**
IAJ0106	063532630010	**MAN2630**
IAJ0107	063532633010	**MAN2633**
IAJ0108	063532632010	**MAN2632**
IVECO		
2997248	063534690370	**MAN2008**
4474592	063304087010	**MAN873**
4474592	063320025010	**MAN261**
4738563	063304087010	**MAN873**
4738563	063320060010	**MAN772**

CROSS REFERENCE	MAGNETI MARELLI	
	LONG	SHORT
IVECO		
4808268	063304087010	**MAN873**
4808268	063320025010	**MAN261**
4808502	063321044010	**MAN286**
4808507	063321044010	**MAN286**
4808519	063304087010	**MAN873**
4831585	063536895380	**MAN2004**
4892318	063535550050	**MAN2003**
4892320	063536550050	**MAN2045**
42498155	063534897070	**MAN2019**
42498157	063534897070	**MAN2019**
42498163	063320025010	**MAN261**
42498164	063320025010	**MAN261**
42498165	063320025010	**MAN261**
42498213	063320025010	**MAN261**
42498271	063320025010	**MAN261**
42498594	063320060010	**MAN772**
42498628	063320060010	**MAN772**
60187584	063534690370	**MAN2008**
61146532	063304087010	**MAN873**
61146532	063320025010	**MAN261**
97107321	063534690370	**MAN2008**
98417134	063534882530	**MAN2015**
98417208	063320060010	**MAN772**
98417209	063304087010	**MAN873**
98417209	063320060010	**MAN772**
98419034	063534690480	**MAN2009**
98419035	063534690480	**MAN2009**
98424453	063534681240	**MAN2006**
99451752	063533155000	**MAN2023**
99463372	063533200010	**MAN2001**
99473468	063533155000	**MAN2023**
99477271	063535255000	**MAN2025**
500317453	063533200010	**MAN2001**
500331736	063535255000	**MAN2025**
500335719	063535150440	**MAN2030**
500371244	063310508010	**MAN958**
504009977	063533250530	**MAN2039**
504009978	063535250200	**MAN2031**
504010576	063533250530	**MAN2039**
504087183	063533251220	**MAN2041**
JCB LANDPOWER		
2871A168	063377461010	**MAN7461**
2871A302	063377461010	**MAN7461**
714-01003	054022656010	**MAN766**
714-10800	054022656010	**MAN766**

CROSS REFERENCE	MAGNETI MARELLI	
	LONG	SHORT
JCB LANDPOWER		
714-26100	054022656010	**MAN766**
714-31500	063534882060	**MAN2014**
714-32200	063377461010	**MAN7461**
714-40148	054022656010	**MAN766**
714-40153	063377461010	**MAN7461**
714-40154	063377461010	**MAN7461**
714-40155	063377461010	**MAN7461**
714-40476	054022656010	**MAN766**
JOHN DEERE		
AL12148	063534882060	**MAN2014**
AT161324	063534882060	**MAN2014**
TY24322	063534882060	**MAN2014**
TY6774	063534882060	**MAN2014**
KHD		
1170731	063534897070	**MAN2019**
01170731	063534897070	**MAN2019**
1178521	063534881850	**MAN2013**
1178669	063534897070	**MAN2019**
01178669	063534897070	**MAN2019**
20030014	063534881850	**MAN2013**
KIA		
0K011-18300B	063532610010	**MAN2610**
0K011-18-300D	063532610010	**MAN2610**
0K054-18-300C	063532621010	**MAN2621**
0K30C-18-300	063532607010	**MAN2607**
0K30D-18-300	063532607010	**MAN2607**
0K553-18-300A	063532617010	**MAN2617**
0K559-18-300	063532616010	**MAN2616**
37300-02551	063532628010	**MAN2628**
37300-02551	063532612010	**MAN2612**
37300-22650	063532602010	**MAN2602**
37300-23600	063532602010	**MAN2602**
37300-27010	063532622010	**MAN2622**
37300-27011	063532622010	**MAN2622**
37300-27012	063532622010	**MAN2622**
37300-27013	063532622010	**MAN2622**
37300-27020	063532622010	**MAN2622**
37300-2W001	063532621010	**MAN2621**
37300-2X000	063532626010	**MAN2626**
37300-33100	063532623010	**MAN2623**
37300-33101	063532623010	**MAN2623**
37300-33103	063532623010	**MAN2623**

CROSS REFERENCE	MAGNETI MARELLI	
	LONG	SHORT
KIA		
37300-42870	063532606010	**MAN2606**
37300-4A110	063532627010	**MAN2627**
37300-4A112	063532627010	**MAN2627**
37300-4X003	063532601010	**MAN2601**
KK137-18-300	063532619010	**MAN2619**
KK137-18-300B	063532619010	**MAN2619**
KK339-18-300	063532619010	**MAN2619**
OK011-18300B	063532610010	**MAN2610**
OK011-18300C	063532610010	**MAN2610**
LAMBORGHINI		
294390900	063321154010	**MAN344**
294392400	063321041010	**MAN284**
LAND ROVER		
ADU8880	054022656010	**MAN766**
ADU9548	054022656010	**MAN766**
ADU9750	054022656010	**MAN766**
ASU1693	054022656010	**MAN766**
LANDINI		
3477 851 M91	054022656010	**MAN766**
LIEBHERR		
610 40 38	063534897070	**MAN2019**
620 04 43	063534897070	**MAN2019**
LOMBARDINI		
SA049	063341345010	**MAN828**
SA207	063341734010	**MAN1166**
SA401	063324157010	**MAN102**
SA403	063324157010	**MAN102**
SA407	063324157010	**MAN102**
SA873	054022656010	**MAN766**
LUCAS ELECTRICAL		
24129	054022656010	**MAN766**
24480	063377461010	**MAN7461**
LRA00190	063320049010	**MAN771**
LRA00358	063534892520	**MAN2035**
LRA00376	063324157010	**MAN102**
LRA00460	054022656010	**MAN766**
LRA00461	054022656010	**MAN766**
LRA00558	063321067010	**MAN300**
LRA00602	054022656010	**MAN766**
LRA00603	063321154010	**MAN344**
LRA00695	063321000010	**MAN342**
LRA00719	063534893260	**MAN2017**

CROSS REFERENCE	MAGNETI MARELLI	
	LONG	SHORT
LUCAS ELECTRICAL		
LRA00751	063321017010	**MAN352**
LRA00912	063320049010	**MAN771**
LRA00958	054022656010	**MAN766**
LRA01150	063380004010	**MAN8004**
LRA01171	063380010010	**MAN8010**
LRA01306	063532615010	**MAN2615**
LRA01390	063531446220	**MAN2033**
LRA01459	063321157010	**MAN322**
LRA01499	063532605010	**MAN2605**
LRA01539	063321402010	**MAN791**
LRA01547	063321625010	**MAN645**
LRA01572	063321615010	**MAN807**
LRA01574	063321328010	**MAN784**
LRA01583	063321340010	**MAN646**
LRA01596	063321859010	**MAN1117**
LRA01669	054022656010	**MAN766**
LRA01682	063532603010	**MAN2603**
LRA01722	063321112010	**MAN379**
LRA01722	063321409010	**MAN909**
LRA01742	063321802010	**MAN1102**
LRA01742	063321729010	**MAN1107**
LRA01751	063532619010	**MAN2619**
LRA01779	063321332010	**MAN642**
LRA01779	063321854010	**MAN955**
LRA01862	063532608010	**MAN2608**
LRA01864	063321620010	**MAN811**
LRA01874	063533250580	**MAN2002**
LRA01887	063321826010	**MAN1127**
LRA01888	054022656010	**MAN766**
LRA01889	063321605010	**MAN939**
LRA01922	063533200010	**MAN2001**
LRA01956	063532606010	**MAN2606**
LRA01961	063532609010	**MAN2609**
LRA01983	063380007010	**MAN8007**
LRA02027	063534150230	**MAN2043**
LRA02039	063532613010	**MAN2613**
LRA02072	063532604010	**MAN2604**
LRA02083	063321729010	**MAN1107**
LRA02092	063324145010	**MAN100**
LRA02099	063321763010	**MAN1171**
LRA02099	063321761010	**MAN1150**
LRA02104	063532622010	**MAN2622**
LRA02105	063321819010	**MAN1110**
LRA02105	063321859010	**MAN1117**
LRA02125	063534150120	**MAN2042**

CROSS REFERENCE	MAGNETI MARELLI	
	LONG	SHORT
LUCAS ELECTRICAL		
LRA02153	063310508010	**MAN958**
LRA02159	063321391010	**MAN789**
LRA02177	063535150440	**MAN2030**
LRA02180	063321836010	**MAN1121**
LRA02231	063532624010	**MAN2624**
LRA02266	063377002010	**MAN7002**
LRA02288	063321391010	**MAN789**
LRA02292	063535250200	**MAN2031**
LRA02303	063377300010	**MAN7300**
LRA02325	063358062010	**MAN1098**
LRA02342	063533250530	**MAN2039**
LRA02345	063341896010	**MAN1170**
LRA02348	063380001010	**MAN8001**
LRA02469	063534681240	**MAN2006**
LRA02518	063535255000	**MAN2025**
LRA02535	063535550050	**MAN2003**
LRA02536	063536550050	**MAN2045**
LRA02545	063377006010	**MAN7006**
LRA02545	063377002010	**MAN7002**
LRA02580	063321041010	**MAN284**
LRA02580	063321021010	**MAN354**
LRA02581	063321191010	**MAN330**
LRA02646	063532623010	**MAN2623**
LRA02653	063321087010	**MAN370**
LRA02653	063321152010	**MAN327**
LRA02690	054022656010	**MAN766**
LRA02709	063321810010	**MAN1147**
LRA02797	063358062010	**MAN1098**
LRA02797	063377493010	**MAN7493**
LRA02799	063380002010	**MAN8002**
LRA02800	063377010010	**MAN7010**
LRA02800	063377013010	**MAN7013**
LRA02804	063358061010	**MAN1097**
LRA02809	063377490010	**MAN7490**
LRA02815	063377416010	**MAN7416**
LRA02817	063358062010	**MAN1098**
LRA02821	063532607010	**MAN2607**
LRA02826	063321753010	**MAN1172**
LRA02828	063321760010	**MAN1125**
LRA02852	063380009010	**MAN8009**
LRA02853	063380008010	**MAN8008**
LRA02862	063321753010	**MAN1172**
LRA02877	063536550080	**MAN2032**
LRA02911	063377418010	**MAN7418**
LRA02946	063377491010	**MAN7491**

CROSS REFERENCE	MAGNETI MARELLI	
	LONG	SHORT
LUCAS ELECTRICAL		
LRA03039	063380001010	**MAN8001**
LRA03047	063377421010	**MAN7421**
LRA03051	063532618010	**MAN2618**
LRA03055	063532622010	**MAN2622**
LRA03062	063377011010	**MAN7011**
LRA03064	063377423010	**MAN7423**
LRA03065	063377424010	**MAN7424**
LRA03066	063377425010	**MAN7425**
LRA03068	063377028010	**MAN7028**
LRA03068	063377495010	**MAN7495**
LRA03069	063377420010	**MAN7420**
LRA03070	063377417010	**MAN7417**
LRA03095	063377007010	**MAN7007**
LRA03137	063321919010	**MAN1159**
LRA03178	063533250130	**MAN2038**
LRA03208	063377421010	**MAN7421**
LRA03224	063377494010	**MAN7494**
LRA03259	063321859010	**MAN1117**
LRA03264	063377016010	**MAN7016**
LRA03282	063377461010	**MAN7461**
LRA03299	063341778010	**MAN1155**
LRA03302	063377460010	**MAN7460**
LRA03312	063377018010	**MAN7018**
LRA462	063324145010	**MAN100**
LRA602	063324199010	**MAN107**
LRA832	063341454010	**MAN1014**
LRB00104	063534696430	**MAN2010**
LRB00131	063534881590	**MAN2012**
LRB00134	063534881850	**MAN2013**
LRB00148	063321600010	**MAN640**
LRB00148	063321173010	**MAN331**
LRB00153	063532615010	**MAN2615**
LRB00178	063321156010	**MAN323**
LRB00178	063321157010	**MAN322**
LRB00188	063321165010	**MAN382**
LRB00196	063534150080	**MAN2029**
LRB00214	063321747010	**MAN1041**
LRB00214	063321604010	**MAN798**
LRB00215	063321600010	**MAN640**
LRB00216	063321615010	**MAN807**
LRB00232	063532611010	**MAN2611**
LRB00260	063341695010	**MAN833**
LRB00290	054022656010	**MAN766**
LRB00291	063377462010	**MAN7462**
LRB00291	063377461010	**MAN7461**

CROSS REFERENCE	MAGNETI MARELLI	
	LONG	SHORT
LUCAS ELECTRICAL		
LRB00292	063321617010	**MAN809**
LRB00297	063388505010	**MAN966**
LRB00300	063534882530	**MAN2015**
LRB00310	063534690480	**MAN2009**
LRB00326	063321173010	**MAN331**
LRB00327	063321625010	**MAN645**
LRB00328	063321839010	**MAN1119**
LRB00329	063321607010	**MAN800**
LRB00330	063321810010	**MAN1147**
LRB00330	063321813010	**MAN1151**
LRB00359	063377414010	**MAN7414**
LRB00367	063377461010	**MAN7461**
LRB00368	063377463010	**MAN7463**
LRB00368	063377461010	**MAN7461**
LRB00378	063533155000	**MAN2023**
LRB00399	063310506010	**MAN956**
LRB00423	063321800010	**MAN1104**
LRB00423	063321729010	**MAN1107**
LRB00425	063321729010	**MAN1107**
LRB00434	063532637010	**MAN2637**
LRB00444	063533251000	**MAN2028**
LRB00481	063533250130	**MAN2038**
LRB00497	063380006010	**MAN8006**
LRB00497	063380005010	**MAN8005**
LRB178	063321155010	**MAN320**
LRB215	063321747010	**MAN1041**
LRB216	063321616010	**MAN808**
MAGNETI MARELLI		
54022384	054022384010	**MAN653**
54022581	054022581010	**MAN649**
54022585	054022585010	**MAN652**
54022598	054022598010	**MAN666**
54022604	054022604010	**MAN662**
54022656	054022656010	**MAN766**
54022708	054022708010	**MAN1018**
63304087	063304087010	**MAN873**
63310506	063310506010	**MAN956**
63310508	063310508010	**MAN958**
63320025	063320025010	**MAN261**
63320049	063320049010	**MAN771**
63320060	063320060010	**MAN772**
63321000	063321000010	**MAN342**
63321011	063321011010	**MAN349**
63321017	063321017010	**MAN352**
63321019	063321019010	**MAN274**

CROSS REFERENCE	MAGNETI MARELLI	
	LONG	SHORT
MAGNETI MARELLI		
63321021	063321021010	**MAN354**
63321041	063321041010	**MAN284**
63321042	063321042010	**MAN283**
63321044	063321044010	**MAN286**
63321062	063321062010	**MAN298**
63321067	063321067010	**MAN300**
63321087	063321087010	**MAN370**
63321112	063321112010	**MAN379**
63321152	063321152010	**MAN327**
63321154	063321154010	**MAN344**
63321155	063321155010	**MAN320**
63321156	063321156010	**MAN323**
63321157	063321157010	**MAN322**
63321165	063321165010	**MAN382**
63321173	063321173010	**MAN331**
63321191	063321191010	**MAN330**
63321328	063321328010	**MAN784**
63321332	063321332010	**MAN642**
63321340	063321340010	**MAN646**
63321346	063321346010	**MAN786**
63321347	063321347010	**MAN787**
63321391	063321391010	**MAN789**
63321395	063321395010	**MAN782**
63321402	063321402010	**MAN791**
63321409	063321409010	**MAN909**
63321485	063321485010	**MAN1021**
63321600	063321600010	**MAN640**
63321604	063321604010	**MAN798**
63321605	063321605010	**MAN939**
63321606	063321606010	**MAN799**
63321607	063321607010	**MAN800**
63321608	063321608010	**MAN801**
63321615	063321615010	**MAN807**
63321616	063321616010	**MAN808**
63321617	063321617010	**MAN809**
63321618	063321618010	**MAN810**
63321620	063321620010	**MAN811**
63321625	063321625010	**MAN645**
63321715	063321715010	**MAN1039**
63321729	063321729010	**MAN1107**
63321734	063321734010	**MAN963**
63321747	063321747010	**MAN1041**
63321753	063321753010	**MAN1172**
63321760	063321760010	**MAN1125**
63321761	063321761010	**MAN1150**

CROSS REFERENCE	MAGNETI MARELLI	
	LONG	SHORT
MAGNETI MARELLI		
63321763	063321763010	**MAN1171**
63321800	063321800010	**MAN1104**
63321802	063321802010	**MAN1102**
63321803	063321803010	**MAN1100**
63321806	063321806010	**MAN1109**
63321810	063321810010	**MAN1147**
63321813	063321813010	**MAN1151**
63321819	063321819010	**MAN1110**
63321826	063321826010	**MAN1127**
63321833	063321833010	**MAN1128**
63321836	063321836010	**MAN1121**
63321839	063321839010	**MAN1119**
63321854	063321854010	**MAN955**
63321858	063321858010	**MAN1116**
63321859	063321859010	**MAN1117**
63321862	063321862010	**MAN1162**
63321863	063321863010	**MAN1156**
63321872	063321872010	**MAN1154**
63321919	063321919010	**MAN1159**
63324145	063324145010	**MAN100**
63324157	063324157010	**MAN102**
63324199	063324199010	**MAN107**
63324264	063324264010	**MAN139**
63324293	063324293010	**MAN1023**
63341343	063341343010	**MAN826**
63341345	063341345010	**MAN828**
63341454	063341454010	**MAN1014**
63341658	063341658010	**MAN1009**
63341695	063341695010	**MAN833**
63341702	063341702010	**MAN1008**
63341711	063341711010	**MAN1142**
63341730	063341730010	**MAN938**
63341734	063341734010	**MAN1166**
63341740	063341740010	**MAN1163**
63341758	063341758010	**MAN1143**
63341778	063341778010	**MAN1155**
63341896	063341896010	**MAN1170**
63358061	063358061010	**MAN1097**
63358062	063358062010	**MAN1098**
63377001	063377001010	**MAN7001**
63377002	063377002010	**MAN7002**
63377004	063377004010	**MAN7004**
63377005	063377005010	**MAN7005**
63377006	063377006010	**MAN7006**
63377007	063377007010	**MAN7007**

CROSS REFERENCE	MAGNETI MARELLI	
	LONG	SHORT
MAGNETI MARELLI		
63377008	063377008010	**MAN7008**
63377009	063377009010	**MAN7009**
63377010	063377010010	**MAN7010**
63377011	063377011010	**MAN7011**
63377012	063377012010	**MAN7012**
63377013	063377013010	**MAN7013**
63377014	063377014010	**MAN7014**
63377015	063377015010	**MAN7015**
63377016	063377016010	**MAN7016**
63377017	063377017010	**MAN7017**
63377018	063377018010	**MAN7018**
63377019	063377019010	**MAN7019**
63377020	063377020010	**MAN7020**
63377021	063377021010	**MAN7021**
63377022	063377022010	**MAN7022**
63377023	063377023010	**MAN7023**
63377024	063377024010	**MAN7024**
63377025	063377025010	**MAN7025**
63377026	063377026010	**MAN7026**
63377027	063377027010	**MAN7027**
63377028	063377028010	**MAN7028**
63377029	063377029010	**MAN7029**
63377030	063377030010	**MAN7030**
63377031	063377031010	**MAN7031**
63377300	063377300010	**MAN7300**
63377301	063377301010	**MAN7301**
63377409	063377409010	**MAN7409**
63377410	063377410010	**MAN7410**
63377411	063377411010	**MAN7411**
63377412	063377412010	**MAN7412**
63377413	063377413010	**MAN7413**
63377414	063377414010	**MAN7414**
63377416	063377416010	**MAN7416**
63377417	063377417010	**MAN7417**
63377418	063377418010	**MAN7418**
63377419	063377419010	**MAN7419**
63377420	063377420010	**MAN7420**
63377421	063377421010	**MAN7421**
63377423	063377423010	**MAN7423**
63377424	063377424010	**MAN7424**
63377425	063377425010	**MAN7425**
63377426	063377426010	**MAN7426**
63377427	063377427010	**MAN7427**
63377428	063377428010	**MAN7428**
63377429	063377429010	**MAN7429**

CROSS REFERENCE	MAGNETI MARELLI	
	LONG	SHORT
MAGNETI MARELLI		
63377430	063377430010	MAN7430
63377431	063377431010	MAN7431
63377432	063377432010	MAN7432
63377433	063377433010	MAN7433
63377434	063377434010	MAN7434
63377435	063377435010	MAN7435
63377436	063377436010	MAN7436
63377437	063377437010	MAN7437
63377438	063377438010	MAN7438
63377439	063377439010	MAN7439
63377440	063377440010	MAN7440
63377441	063377441010	MAN7441
63377442	063377442010	MAN7442
63377443	063377443010	MAN7443
63377460	063377460010	MAN7460
63377461	063377461010	MAN7461
63377462	063377462010	MAN7462
63377463	063377463010	MAN7463
63377464	063377464010	MAN7464
63377465	063377465010	MAN7465
63377466	063377466010	MAN7466
63377490	063377490010	MAN7490
63377491	063377491010	MAN7491
63377492	063377492010	MAN7492
63377493	063377493010	MAN7493
63377494	063377494010	MAN7494
63377495	063377495010	MAN7495
63377496	063377496010	MAN7496
63380001	063380001010	MAN8001
63380002	063380002010	MAN8002
63380004	063380004010	MAN8004
63380005	063380005010	MAN8005
63380006	063380006010	MAN8006
63380007	063380007010	MAN8007
63380008	063380008010	MAN8008
63380009	063380009010	MAN8009
63380010	063380010010	MAN8010
63388502	063388502010	MAN885
63388505	063388505010	MAN966
63532601	063532601010	MAN2601
63532602	063532602010	MAN2602
63532603	063532603010	MAN2603
63532604	063532604010	MAN2604
63532605	063532605010	MAN2605
63532606	063532606010	MAN2606

CROSS REFERENCE	MAGNETI MARELLI	
	LONG	SHORT
MAGNETI MARELLI		
63532607	063532607010	MAN2607
63532608	063532608010	MAN2608
63532609	063532609010	MAN2609
63532610	063532610010	MAN2610
63532611	063532611010	MAN2611
63532612	063532612010	MAN2612
63532613	063532613010	MAN2613
63532614	063532614010	MAN2614
63532615	063532615010	MAN2615
63532616	063532616010	MAN2616
63532617	063532617010	MAN2617
63532618	063532618010	MAN2618
63532619	063532619010	MAN2619
63532620	063532620010	MAN2620
63532621	063532621010	MAN2621
63532622	063532622010	MAN2622
63532623	063532623010	MAN2623
63532624	063532624010	MAN2624
63532625	063532625010	MAN2625
63532626	063532626010	MAN2626
63532627	063532627010	MAN2627
63532628	063532628010	MAN2628
63532629	063532629010	MAN2629
63532630	063532630010	MAN2630
63532631	063532631010	MAN2631
63532632	063532632010	MAN2632
63532633	063532633010	MAN2633
63532634	063532634010	MAN2634
63532635	063532635010	MAN2635
63532636	063532636010	MAN2636
63532637	063532637010	MAN2637
63533200	063533200010	MAN2001
63533250	063533250010	MAN2037
63533479	063533479010	MAN2801
MAN		
51 26101 7201	063534699820	MAN2011
51 26101 7232	063535255010	MAN2026
51 26101 7234	063535255010	MAN2026
51 26101 7242	063535255010	MAN2026
51 26101 7247	063535255010	MAN2026
51 26101 7265	063535255010	MAN2026
MASSEY FERGUSON		
1447312M91	054022384010	MAN653
1447701R91	054022384010	MAN653
1447706M91	054022598010	MAN666

CROSS REFERENCE	MAGNETI MARELLI	
	LONG	SHORT
MASSEY FERGUSON		
1447706R91	054022598010	MAN666
1693232M91	054022384010	MAN653
1693233M91	054022384010	MAN653
1897695R91	054022384010	MAN653
3478360M91	054022656010	MAN766
3536264M91	063324157010	MAN102
3536264M91	054022384010	MAN653
3536265M91	054022384010	MAN653
3611576M91	054022656010	MAN766
3611931M91	054022656010	MAN766
3701910M91	054022656010	MAN766
3701911M91	054022656010	MAN766
3701913M91	054022656010	MAN766
3714944M1	054022656010	MAN766
3930501R91	054022384010	MAN653
3930504R1	054022656010	MAN766
3930504R91	054022656010	MAN766
MAZDA		
Y60118300	063377416010	MAN7416
MERCEDES-BENZ		
007 154 53 02	063534893260	MAN2017
007 154 54 02	063534893260	MAN2017
007 154 55 02	063534893260	MAN2017
007 154 56 02	063534893260	MAN2017
007 154 58 02	063534893260	MAN2017
007 154 87 02	063534893260	MAN2017
008 154 87 02	063534893260	MAN2017
009 154 07 02	063534699820	MAN2011
011 154 80 02	063532250200	MAN2027
012 154 59 02	063536250020	MAN2044
616 150 00 51	063321617010	MAN809
660 154 09 02	063532250200	MAN2027
A 009 154 07 02	063534699820	MAN2011
A 011 154 80 02	063532250200	MAN2027
A 012 154 59 02	063536250020	MAN2044
A 160 154 01 01	063341896010	MAN1170
A 160 154 02 01	063341896010	MAN1170

CROSS REFERENCE	MAGNETI MARELLI	
	LONG	SHORT
MERCEDES-BENZ		
A 160 154 02 01	063341702010	MAN1008
A 160 154 03 01	063341658010	MAN1009
A 160 154 04 01	063341702010	MAN1008
A 160 154 05 01	063341658010	MAN1009
A 160 154 05 02	063341658010	MAN1009
A 160 154 06 01	063341702010	MAN1008
A 660 154 09 02	063532250200	MAN2027
MITSUBISHI		
A002T14592	063341695010	MAN833
A002TA2292	063341695010	MAN833
A004T01591	063341345010	MAN828
A005T31772	054022384010	MAN653
A2T 14592	063341695010	MAN833
A2T A2292	063341695010	MAN833
A3T 03392	063532615010	MAN2615
A3T 03393	063532615010	MAN2615
A3T 03393ZC	063532615010	MAN2615
A3T 03471	063532615010	MAN2615
A3T 03492	063532615010	MAN2615
A3T 03493	063532615010	MAN2615
A3T 03493ZC	063532615010	MAN2615
A3T 45693	063532623010	MAN2623
A3T 45693ZC	063532623010	MAN2623
A3T 45694	063532623010	MAN2623
A5T 31772	054022384010	MAN653
A5T A6391A	063341734010	MAN1166
A5T A6391B	063341734010	MAN1166
A5T A6391C	063341734010	MAN1166
MD 130329	063532615010	MAN2615
MD 133171	063532615010	MAN2615
MD 133513	063532615010	MAN2615
MD 136838	063532615010	MAN2615
MD 136839	063532615010	MAN2615
MD 149750	063532623010	MAN2623
MD 153843	063532623010	MAN2623
MD 169683	063532615010	MAN2615
NEW HOLLAND		
66021636	054022656010	MAN766

CROSS REFERENCE	MAGNETI MARELLI	
	LONG	SHORT
NEW HOLLAND		
73401608	063321753010	MAN1172
82014508	063321753010	MAN1172
82014508	063321347010	MAN787
82020011	063321753010	MAN1172
84530361	054022656010	MAN766
87361085	063321753010	MAN1172
87751792	063534881850	MAN2013
820157231	063321753010	MAN1172
1C1T10300BB	063321753010	MAN1172
65GB10300LA	063321753010	MAN1172
F2NN10B 376AA	063321753010	MAN1172
R95VB 10300BB	063321753010	MAN1172
NIPPARTS		
J5110305	063532621010	MAN2621
J5110308	063532607010	MAN2607
J5110311	063532616010	MAN2616
J5110312	063532617010	MAN2617
J5110320	063532622010	MAN2622
J5110500	063532611010	MAN2611
J5110501	063532608010	MAN2608
J5110504	063532623010	MAN2623
J5110506	063532609010	MAN2609
J5110508	063532605010	MAN2605
J5110514	063532613010	MAN2613
J5110516	063532606010	MAN2606
J5110516	063532603010	MAN2603
J5110519	063532622010	MAN2622
J5110520	063532627010	MAN2627
J5110524	063532624010	MAN2624
J5110903	063532637010	MAN2637
J5110906	063532631010	MAN2631
J5110908	063532620010	MAN2620
J5110909	063532630010	MAN2630
J5113021	063532619010	MAN2619
J5115027	063532615010	MAN2615
J5115027	063532623010	MAN2623
NISSAN		
773000830	063531446220	MAN2033
23100 LA5MA	063536550050	MAN2045
OPEL		
824189	063377491010	MAN7491
1204069	063534881590	MAN2012
1204072	063320049010	MAN771

CROSS REFERENCE	MAGNETI MARELLI	
	LONG	SHORT
OPEL		
1204145	063533479010	MAN2801
1204336	063534881590	MAN2012
1204344	063320049010	MAN771
1204426	063377423010	MAN7423
1204429	063377494010	MAN7494
1204432	063377493010	MAN7493
1204433	063377492010	MAN7492
1204434	063377491010	MAN7491
1204436	063377492010	MAN7492
1204436	063377490010	MAN7490
3493823	063533479010	MAN2801
3493824	063533479010	MAN2801
6204000	063533479010	MAN2801
6204002	063533479010	MAN2801
6204072	063320049010	MAN771
6204104	063534150230	MAN2043
6204151	063533479010	MAN2801
6204181	063358061010	MAN1097
6204187	063377492010	MAN7492
6204188	063377490010	MAN7490
6204189	063377491010	MAN7491
6204196	063533479010	MAN2801
6204201	063377495010	MAN7495
6204213	063377494010	MAN7494
6204256	063377496010	MAN7496
6204257	063377423010	MAN7423
6204258	063377424010	MAN7424
6204259	063377425010	MAN7425
6204273	063377495010	MAN7495
6204281	063377494010	MAN7494
6204282	063377425010	MAN7425
6204664	063377493010	MAN7493
9133599	063532250220	MAN2036
9192825	063532250220	MAN2036
9200958	063534150230	MAN2043
9201489	063534150080	MAN2029
9512800	063533479010	MAN2801
9562205	063358061010	MAN1097
10480409	063533479010	MAN2801
13117236	063377491010	MAN7491
13117279	063358061010	MAN1097
13117340	063377492010	MAN7492
13117341	063377490010	MAN7490
13153237	063377495010	MAN7495
13197578	063377494010	MAN7494

CROSS REFERENCE	MAGNETI MARELLI	
	LONG	SHORT
OPEL		
13222929	063377496010	MAN7496
13222933	063377423010	MAN7423
13222934	063377423010	MAN7423
13222935	063377424010	MAN7424
13222936	063377425010	MAN7425
13243463	063358061010	MAN1097
13256928	063377495010	MAN7495
13256929	063377494010	MAN7494
13256930	063377493010	MAN7493
13256931	063377425010	MAN7425
13256932	063377424010	MAN7424
13283344	063358061010	MAN1097
24437120	063534150230	MAN2043
24439410	063534150080	MAN2029
90337043	063534881590	MAN2012
90348697	063534881590	MAN2012
90356897	063533479010	MAN2801
90443929	063533479010	MAN2801
93169024	063358061010	MAN1097
93169025	063358061010	MAN1097
93169026	063377493010	MAN7493
93169030	063377491010	MAN7491
93169032	063377490010	MAN7490
93169032	063377492010	MAN7492
93175788	063533479010	MAN2801
93175815	063533479010	MAN2801
93175963	063533479010	MAN2801
93180098	063377492010	MAN7492
93180102	063377490010	MAN7490
93180104	063377491010	MAN7491
93181383	063533479010	MAN2801
93183381	063377495010	MAN7495
93185261	063377494010	MAN7494
93190915	063377495010	MAN7495
PERKINS		
185046360	054022656010	MAN766
185046522	063377461010	MAN7461
2871A141	063324157010	MAN102
2871A141	054022656010	MAN766
2871A147	054022384010	MAN653
2871A148	054022656010	MAN766
2871A154	054022656010	MAN766
2871A160	054022656010	MAN766
2871A163	054022656010	MAN766
2871A301	063377460010	MAN7460

CROSS REFERENCE	MAGNETI MARELLI	
	LONG	SHORT
PERKINS		
2871A302	063377461010	MAN7461
2871A303	063377461010	MAN7461
2871A303	063377462010	MAN7462
2871A304	063377463010	MAN7463
2871A304	063377461010	MAN7461
2871A305	063377464010	MAN7464
2871A309	063377461010	MAN7461
2871A701	063377465010	MAN7465
2871A702	063377466010	MAN7466
2871D031	054022598010	MAN666
PSA Group		
95667742	063533350070	MAN2005
96050629	063533350070	MAN2005
9630204580	063341734010	MAN1166
9633782680	063341734010	MAN1166
9635557780	063341740010	MAN1163
9637075380	063341740010	MAN1163
9637856880	063341740010	MAN1163
9638275380	063341734010	MAN1166
9638275680	063341734010	MAN1166
9638275980	063341734010	MAN1166
9638276280	063341740010	MAN1163
9638543680	063377300010	MAN7300
9641398680	063341734010	MAN1166
9641727480	063341740010	MAN1163
9642879680	063377300010	MAN7300
9642880080	063341734010	MAN1166
9649611480	063341734010	MAN1166
9649611580	063341734010	MAN1166
9649611680	063377300010	MAN7300
9656956380	063341734010	MAN1166
9665067980	063377301010	MAN7301
5702C0	063310508010	MAN958
5702C1	063310508010	MAN958
5702C9	063377301010	MAN7301
5702F0	063377301010	MAN7301
57052A	063321734010	MAN963
57052B	063321734010	MAN963
57054C	063388505010	MAN966
57054G	063533350070	MAN2005
57054J	063341734010	MAN1166
57054P	063341740010	MAN1163
57055A	063321734010	MAN963
57055B	063341734010	MAN1166
57055C	063321734010	MAN963

CROSS REFERENCE	MAGNETI MARELLI	
	LONG	SHORT
PSA Group		
57055P	063341740010	MAN1163
57055Q	063341740010	MAN1163
57055U	063341734010	MAN1166
57055Y	063341740010	MAN1163
57056D	063377301010	MAN7301
57056M	063341740010	MAN1163
57056U	063341740010	MAN1163
57056V	063341740010	MAN1163
57057A	063341734010	MAN1166
57057C	063341734010	MAN1166
57057E	063321734010	MAN963
57057F	063321734010	MAN963
57057G	063341740010	MAN1163
57057H	063341740010	MAN1163
57058C	063377301010	MAN7301
5705AF	063310508010	MAN958
5705AW	063377301010	MAN7301
5705AZ	063341734010	MAN1166
5705CW	063377301010	MAN7301
5705CX	063341734010	MAN1166
5705E1	063533350070	MAN2005
5705EL	063341740010	MAN1163
5705EN	063377301010	MAN7301
5705EV	063310508010	MAN958
5705F9	063533350070	MAN2005
5705FC	063321734010	MAN963
5705GG	063341740010	MAN1163
5705GK	063341740010	MAN1163
5705GP	063341734010	MAN1166
5705GQ	063321734010	MAN963
5705GW	063321854010	MAN955
5705R9	063321620010	MAN811
57655V	063321734010	MAN963
QUINTON HAZELL		
9030560	054022604010	MAN662
9030760	063534892520	MAN2035
9030770	063324145010	MAN100
9030780	063534892520	MAN2035
9030780	054022581010	MAN649
9030790	063324199010	MAN107
9030940	063321155010	MAN320
9030970	063321042010	MAN283
9030970	063321041010	MAN284
9031680	063324145010	MAN100
9033230	063321042010	MAN283

CROSS REFERENCE	MAGNETI MARELLI	
	LONG	SHORT
QUINTON HAZELL		
9033230	063321041010	MAN284
9033250	063321112010	MAN379
9033250	063321157010	MAN322
9033830	063534892520	MAN2035
9033830	063324145010	MAN100
9033850	063324145010	MAN100
9033850	063534892520	MAN2035
9033860	063534892520	MAN2035
9033890	063321112010	MAN379
9033890	063321409010	MAN909
9033940	063324157010	MAN102
9034470	054022604010	MAN662
9035641	063321067010	MAN300
9036020	063324145010	MAN100
9036060	054022598010	MAN666
9036191	054022585010	MAN652
9036701	063341695010	MAN833
9036750	063321154010	MAN344
9037130	063321156010	MAN323
9038621	063321173010	MAN331
9039471	063321173010	MAN331
9039510	063533100540	MAN2022
9040641	063321858010	MAN1116
9041240	063532250220	MAN2036
9041300	063535150200	MAN2024
9041381	063388505010	MAN966
9042650	063380007010	MAN8007
9043680	063533479010	MAN2801
9045270	063534150080	MAN2029
9045370	063533251000	MAN2028
9046060	063533250530	MAN2039
9046210	063535250200	MAN2031
9051001	063532634010	MAN2634
9051527	063532615010	MAN2615
9051532	063532623010	MAN2623
9051533	063532615010	MAN2615
9051534	063532615010	MAN2615
9060501	063532608010	MAN2608
9060503	063532603010	MAN2603
9060506	063532609010	MAN2609
9060514	063532613010	MAN2613
9060906	063532631010	MAN2631
9060908	063532620010	MAN2620
9060909	063532620010	MAN2620
9060910	063532620010	MAN2620

CROSS REFERENCE	MAGNETI MARELLI	
	LONG	SHORT
QUINTON HAZELL		
9090027	063321347010	MAN787
9090027	063321346010	MAN786
9090041	063341730010	MAN938
9090047	063532611010	MAN2611
9090067	063321615010	MAN807
9090076	063377409010	MAN7409
9090077	063377413010	MAN7413
9090092	063321625010	MAN645
9090096	063321391010	MAN789
9090129	063532637010	MAN2637
9090133	063321618010	MAN810
9090147	063321734010	MAN963
9090176	063380004010	MAN8004
9090216	063321620010	MAN811
9090216	063321617010	MAN809
9090232	063341758010	MAN1143
9090233	063341711010	MAN1142
9090322	063377007010	MAN7007
9090334	063321819010	MAN1110
9090354	063532622010	MAN2622
9090395	063532624010	MAN2624
9090424	063532627010	MAN2627
9090451	063532606010	MAN2606
9931340	063320060010	MAN772
9932191	063320025010	MAN261
9939340	063534681240	MAN2006
9941970	063533155000	MAN2023
9942350	063534681400	MAN2007
9942820	063535150440	MAN2030
9945170	063535255000	MAN2025
9945430	063536550050	MAN2045
9990439	063531446220	MAN2033
RENAULT		
7700308989	063534681240	MAN2006
7700869600	063310506010	MAN956
7711134281	063310506010	MAN956
RENAULT TRUCKS		
20409240	063536550080	MAN2032
20849351	063536550080	MAN2032
5010306007	063534681400	MAN2007
5010306801	063534681400	MAN2007
7420849351	063536550080	MAN2032
7421429786	063536550080	MAN2032
ROVER		
ADU7414	054022598010	MAN666

CROSS REFERENCE	MAGNETI MARELLI	
	LONG	SHORT
ROVER		
ADU7414	063324145010	MAN100
ADU7777	054022384010	MAN653
ADU8090	054022384010	MAN653
ADU8880	054022656010	MAN766
ADU9547	054022384010	MAN653
AJU1915	063324145010	MAN100
AJU1915	054022598010	MAN666
AJU1992	054022384010	MAN653
AUU1035	063324145010	MAN100
AUU1035	054022598010	MAN666
GEU2255	054022598010	MAN666
GEU2256	054022384010	MAN653
YLE10011	063324157010	MAN102
YLE10021	063324145010	MAN100
YLE10021	054022598010	MAN666
YLE10050	054022598010	MAN666
YLE10050	063324145010	MAN100
YLE10065	054022656010	MAN766
YLE10066	063324157010	MAN102
YLE10082	054022598010	MAN666
YLE10082	063324145010	MAN100
YLE10100	063377463010	MAN7463
YLE101570	054022656010	MAN766
YLE101580	054022656010	MAN766
SCANIA		
354858	063534696430	MAN2010
357736	063534696430	MAN2010
371972	063534696430	MAN2010
1117252	063534696430	MAN2010
SMART		
0004717V005	063532250200	MAN2027
Q0004717V005	063532250200	MAN2027
STEINBOCK		
031000	063534897070	MAN2019
STEYR		
614S090001	063534897070	MAN2019
STILL		
521526	063534897070	MAN2019
SUZUKI		
31400-85E00	063358061010	MAN1097
31400-85E00000	063358061010	MAN1097
TOYOTA		
27060-0J010	063377439010	MAN7439
27060-0J030	063377439010	MAN7439

CROSS REFERENCE	MAGNETI MARELLI	
	LONG	SHORT
TOYOTA		
27060-21010	063377442010	MAN7442
27060-21011	063377442010	MAN7442
27060-21030	063377438010	MAN7438
27060-21031	063377438010	MAN7438
27060-22030	063377428010	MAN7428
27060-22100	063377431010	MAN7431
27060-22130	063377432010	MAN7432
27060-22140	063377429010	MAN7429
27060-22210	063377430010	MAN7430
27060-23010	063377439010	MAN7439
27060-23030	063377440010	MAN7440
27060-23040	063377441010	MAN7441
27060-27030	063377427010	MAN7427
27060-28080	063377433010	MAN7433
27060-28090	063377433010	MAN7433
27060-28110	063377434010	MAN7434
27060-28260	063377435010	MAN7435
27060-74220	063377010010	MAN7010
27060-74360	063377436010	MAN7436
27060-74410	063377436010	MAN7436
27060-74730	063377437010	MAN7437
27060-74750	063377437010	MAN7437
TRISCAN		
20-214-104-652	054022656010	MAN766
20-218-102-552	063321041010	MAN284
20-218-102-552	063321409010	MAN909
20-218-104-552	063321154010	MAN344
20-218-113-304	063320025010	MAN261
20-218-115-552	063321044010	MAN286
20-218-122-652	063321156010	MAN323
20-218-133-752	063321600010	MAN640
20-218-133-752	063321604010	MAN798
20-218-134-852	063321340010	MAN646
20-218-140-852	063321402010	MAN791

CROSS REFERENCE	MAGNETI MARELLI	
	LONG	SHORT
TRISCAN		
20-218-142-652	063321173010	MAN331
20-218-143-752	063321607010	MAN800
20-218-143-852	063321328010	MAN784
20-218-145-802	063388505010	MAN966
20-218-155-1002	063321395010	MAN782
20-218-158-752	063321620010	MAN811
20-218-171-602	063321605010	MAN939
20-218-172-752	063377002010	MAN7002
20-218-172-752	063377008010	MAN7008
20-219-124-702	063341345010	MAN828
20-219-125-702	063341695010	MAN833
20-219-126-952	063341345010	MAN828
20-219-129-1002	063341345010	MAN828
20-219-130-1002	063341343010	MAN826
20-219-131-1002	063341343010	MAN826
20-219-135-702	063533100540	MAN2022
20-219-137-702	063341730010	MAN938
20-219-138-702	063533100530	MAN2021
20-219-145-902	063377412010	MAN7412
20-219-146-802	063377410010	MAN7410
20-219-149-802	063377409010	MAN7409
20-219-160-902	063380005010	MAN8005

CROSS REFERENCE	MAGNETI MARELLI	
	LONG	SHORT
TRISCAN		
20-226-112-752	063532615010	MAN2615
20-226-112-902	063532623010	MAN2623
20-226-133-752	063532614010	MAN2614
20-226-133-902	063532611010	MAN2611
20-226-141-652	063532605010	MAN2605
20-226-153-652	063532625010	MAN2625
20-226-154-602	063532613010	MAN2613
20-228-110-552	063534881590	MAN2012
20-228-122-1002	063533479010	MAN2801
20-235-147-802	063377436010	MAN7436
20-235-167-702	063377439010	MAN7439
20-235-167-902	063377440010	MAN7440
20-235-184-802	063377431010	MAN7431
20-526-126-1102	063532608010	MAN2608
20-526-127-752	063532606010	MAN2606
20-547-106-852	063532636010	MAN2636
20-547-109-652	063532620010	MAN2620
UNIC-SIMCA		
004699242	063304087010	MAN873
004717509	063304087010	MAN873
004738772	063304087010	MAN873
VAG		
3937951	063321112010	MAN379
0004769911	063321042010	MAN283
028903026G	063535150200	MAN2024
037903025M	063533250130	MAN2038
037903025T	063533250130	MAN2038
038903018R	063533250130	MAN2038

CROSS REFERENCE	MAGNETI MARELLI	
	LONG	SHORT
VAG		
038903023L	063533250010	MAN2037
03D903025J	063533250130	MAN2038
068903029S	063534893700	MAN2018
068903031K	063534893700	MAN2018
SE02290 3020BX	063321011010	MAN349
SE14190 3020A	063341454010	MAN1014
SE14190 3020AX	063341454010	MAN1014
VALEO		
432702	063341454010	MAN1014
432819	054022581010	MAN649
432819	063324145010	MAN100
432825	054022384010	MAN653
432825	063534892520	MAN2035
432836	063324199010	MAN107
432836	063534892520	MAN2035
432868	063321042010	MAN283
433059	063321011010	MAN349
433115	063321155010	MAN320
433115	063321157010	MAN322
433117	063321112010	MAN379
433117	063321409010	MAN909
433415	054022656010	MAN766
434034	063535150440	MAN2030
436103	063321409010	MAN909
436105	063321041010	MAN284
436105	063321021010	MAN354
436108	063341454010	MAN1014
436109	063321042010	MAN283
436112	063321112010	MAN379
436112	063321409010	MAN909
436113	063341454010	MAN1014
436114	063321154010	MAN344
436114	063321155010	MAN320
436117	063320049010	MAN771
436118	063321067010	MAN300
436120	063534893260	MAN2017
436150	063534881590	MAN2012
436166	054022581010	MAN649
436166	063324145010	MAN100
436167	054022598010	MAN666
436167	063534892520	MAN2035
436169	063324145010	MAN100

CROSS REFERENCE	MAGNETI MARELLI	
	LONG	SHORT
VALEO		
436173	054022581010	MAN649
436173	063324145010	MAN100
436179	063324157010	MAN102
436181	054022384010	MAN653
436181	054022581010	MAN649
436181	063534892520	MAN2035
436223	063534892520	MAN2035
436223	063324145010	MAN100
436230	063321000010	MAN342
436237	063320049010	MAN771
436237	063321019010	MAN274
436238	063321112010	MAN379
436239	063321152010	MAN327
436239	063321087010	MAN370
436241	063321017010	MAN352
436242	063321157010	MAN322
436243	063321154010	MAN344
436243	063321087010	MAN370
436243	063321152010	MAN327
436244	063321156010	MAN323
436258	063533350070	MAN2005
436297	063320049010	MAN771
436329	063321062010	MAN298
436412	063534696430	MAN2010
436416	063304087010	MAN873
436481	063321600010	MAN640
436481	063321173010	MAN331
436504	063532615010	MAN2615
436586	063321044010	MAN286
436609	063532615010	MAN2615
436610	063532623010	MAN2623
436635	063388505010	MAN966
436650	063534690480	MAN2009
436674	054022604010	MAN662
436683	063533479010	MAN2801
436685	063341345010	MAN828
436690	054022585010	MAN652
436692	063324157010	MAN102
436692	054022656010	MAN766
436699	063532614010	MAN2614
436699	054022598010	MAN666
436742	063310506010	MAN956
436755	063324264010	MAN139
436774	054022604010	MAN662
436785	063534893260	MAN2017

CROSS REFERENCE	MAGNETI MARELLI	
	LONG	SHORT
VALEO		
437072	063534893260	MAN2017
437111	054022585010	MAN652
437122	063531446220	MAN2033
437148	063532605010	MAN2605
437166	063534699820	MAN2011
437193	063321734010	MAN963
437332	063532619010	MAN2619
437337	063532613010	MAN2613
437338	063532611010	MAN2611
437349	063310508010	MAN958
437356	063321734010	MAN963
437356	063341734010	MAN1166
437357	063321734010	MAN963
437370	063321165010	MAN382
437388	063533100540	MAN2022
437390	054022708010	MAN1018
437390	063324293010	MAN1023
437400	063533250010	MAN2037
437404	063533250130	MAN2038
437427	063341695010	MAN833
437444	063533250130	MAN2038
437446	063534681400	MAN2007
437447	063534681400	MAN2007
437453	063380001010	MAN8001
437461	063377301010	MAN7301
437473	063358062010	MAN1098
437474	063358061010	MAN1097
437475	063358062010	MAN1098
437475	063377493010	MAN7493
437483	063533155000	MAN2023
437485	063533200010	MAN2001
437503	063358061010	MAN1097
437503	063358062010	MAN1098
437504	063358061010	MAN1097
437533	063377494010	MAN7494
437551	063321173010	MAN331
437567	063321729010	MAN1107
437569	063321620010	MAN811
437569	063321617010	MAN809
437594	063534681240	MAN2006
437603	063534150230	MAN2043
437619	063377412010	MAN7412
437619	063377414010	MAN7414
437620	063377409010	MAN7409
437623	063377410010	MAN7410

CROSS REFERENCE	MAGNETI MARELLI	
	LONG	SHORT
VALEO		
437623	063377411010	**MAN7411**
437635	063321802010	**MAN1102**
437635	063321819010	**MAN1110**
437635	063321729010	**MAN1107**
437652	063321800010	**MAN1104**
437652	063321803010	**MAN1100**
437652	063321729010	**MAN1107**
437668	063321328010	**MAN784**
437669	063321607010	**MAN800**
437670	063321839010	**MAN1119**
437672	063533250580	**MAN2002**
437679	063321810010	**MAN1147**
437679	063321813010	**MAN1151**
437690	063380007010	**MAN8007**
437691	063321605010	**MAN939**
437704	063532634010	**MAN2634**
437732	063321191010	**MAN330**
437734	063321347010	**MAN787**
437734	063341345010	**MAN828**
437734	063321346010	**MAN786**
437756	063341730010	**MAN938**
437774	063341343010	**MAN826**
437780	063321391010	**MAN789**
437785	063321402010	**MAN791**
437786	063321402010	**MAN791**
437787	063324293010	**MAN1023**
437814	063321615010	**MAN807**
437815	063321615010	**MAN807**
437815	063321332010	**MAN642**
437828	063532637010	**MAN2637**
437851	063321617010	**MAN809**
439030	063321600010	**MAN640**
439030	063321747010	**MAN1041**
439064	063388505010	**MAN966**
439079	063534690480	**MAN2009**
439215	063310506010	**MAN956**
439339	063310508010	**MAN958**
439342	063532619010	**MAN2619**
439384	063532613010	**MAN2613**
439385	063532611010	**MAN2611**
439427	063533479010	**MAN2801**
439441	063533250010	**MAN2037**
439481	063533250130	**MAN2038**
439488	063380001010	**MAN8001**
439504	063358062010	**MAN1098**

CROSS REFERENCE	MAGNETI MARELLI	
	LONG	SHORT
VALEO		
439505	063358061010	**MAN1097**
439506	063358062010	**MAN1098**
439506	063377493010	**MAN7493**
439524	063358061010	**MAN1097**
439539	063377494010	**MAN7494**
439651	063532602010	**MAN2602**
440001	063321729010	**MAN1107**
440024	063341343010	**MAN826**
440103	063532602010	**MAN2602**
440104	063532602010	**MAN2602**
440119	063532622010	**MAN2622**
440134	063534882530	**MAN2015**
440148	063377412010	**MAN7412**
440191	063377413010	**MAN7413**
440192	063380006010	**MAN8006**
440192	063380005010	**MAN8005**
440193	063380010010	**MAN8010**
440194	054022708010	**MAN1018**
440224	063380004010	**MAN8004**
440259	063533251000	**MAN2028**
440259	063380007010	**MAN8007**
440293	063377442010	**MAN7442**
440294	063377438010	**MAN7438**
456691	063321021010	**MAN354**
456729	063321019010	**MAN274**
456731	063321017010	**MAN352**
457080	054022585010	**MAN652**
510391	063320025010	**MAN261**
510391	063320060010	**MAN772**
516032	063341454010	**MAN1014**
543042	063321156010	**MAN323**
600005	063532601010	**MAN2601**
600010	063532609010	**MAN2609**
600012	063532608010	**MAN2608**
600016	063532616010	**MAN2616**
600017	063532612010	**MAN2612**
600017	063532628010	**MAN2628**
600020	063532607010	**MAN2607**
600022	063532610010	**MAN2610**
600024	063532601010	**MAN2601**
600028	063532628010	**MAN2628**
600028	063532612010	**MAN2612**
600029	063532612010	**MAN2612**
600029	063532628010	**MAN2628**
600096	063532629010	**MAN2629**

CROSS REFERENCE	MAGNETI MARELLI	
	LONG	SHORT
VALEO		
600098	063532626010	**MAN2626**
746003	063533479010	**MAN2801**
746020	063533250010	**MAN2037**
746033	063341730010	**MAN938**
746055	063534893260	**MAN2017**
746056	063321600010	**MAN640**
746063	063534881590	**MAN2012**
746064	063321165010	**MAN382**
746067	063388505010	**MAN966**
746069	063321000010	**MAN342**
2518028	063321000010	**MAN342**
2541135	063321000010	**MAN342**
2541233	063321011010	**MAN349**
2541284	063321000010	**MAN342**
2541423	063320025010	**MAN261**
2541728	063321600010	**MAN640**
436181WO	054022384010	**MAN653**
NA140	063324145010	**MAN100**
NA381	063341454010	**MAN1014**
NA429	063320025010	**MAN261**
NA467	063321391010	**MAN789**
NA482	063321067010	**MAN300**
NA486	063321800010	**MAN1104**
NA491	063321062010	**MAN298**
NA495	063321615010	**MAN807**
NA495	063321618010	**MAN810**
SG12B040	063310508010	**MAN958**
VA140	054022656010	**MAN766**
VALTRA DO BRASIL (VALMET)		
83632800	054022656010	**MAN766**
VAUXHALL		
R1530052	063533479010	**MAN2801**
R1530096	063358061010	**MAN1097**
R1530097	063358062010	**MAN1098**
VISTEON		
2010001001	063380001010	**MAN8001**
2010001002	063380002010	**MAN8002**
2010001004	063380004010	**MAN8004**
2010001005	063380005010	**MAN8005**
2010001006	063380006010	**MAN8006**
2010001007	063380007010	**MAN8007**
2010001008	063380008010	**MAN8008**
2010001009	063380009010	**MAN8009**
2010001010	063380010010	**MAN8010**

CROSS REFERENCE	MAGNETI MARELLI	
	LONG	SHORT
VM		
38 52 0137A	063534690480	**MAN2009**
VOLVO		
2084935	063536550080	**MAN2032**
8603183	063377416010	**MAN7416**
20409240	063536550080	**MAN2032**
21429786	063536550080	**MAN2032**
30667068	063377416010	**MAN7416**
30667072	063377420010	**MAN7420**
30795423	063377416010	**MAN7416**
30795495	063377420010	**MAN7420**
36000599	063377416010	**MAN7416**

Codici ad esaurimento
Part numbers until stocks last
So lange Vorrat reicht
Codes à épuisement
Códigos hasta finalizar stock
códigos em fim de stock
Kod na wyczerpaniu
Stok tükenene kadar aktif olan parça numaraları

MAGNETI MARELLI					kW					
LONG	SHORT								kW	V
063226800010	**MSN138**	LAND ROVER	DEFENDER 90/110	2.5 - 2.5 TD/TDI	62 → 83	9/1985	→	7/1990	1,4	12
063226845010	**MSN157**	NISSAN	PRIMERA	2.0 i - 2.0 16V / 4x4	85 → 110	6/1990	→	6/1996	1,4	12
063227489010	**MSN181**	CARBODIES	FL2 / FX4	2.2 D - 2.3 D - 2.5 D	40 → 50	1/1969	→	12/1989	2,2	12
063227564010	**MSN198**	DAF	45	120 - 130 - 150 - 160	85 → 119	5/1991	→	12/2000	2,8	12
063521070220	**MSN2068**	VAG	A3 - GOLF III / IV PASSAT	1.6 - 1.8 - 2.0	55 → 110	10/1990	→	3/1999	1,1	12
063521070970	**MSN2072**	FIAT	BRAVO I - MAREA	1.6 - 1.6 16V	76	11/1998	→	9/2002	1,1	12
063521210300	**MSN2100**	VAG	AROSA - FABIA - IBIZA IV - LUPO - POLO	1.4 - 1.4 16V - 1.6	40 → 92	10/1998	→	3/2008	1,1	12
063522187030	**MSN2114**	FIAT	DUCATO	2.4 TD /4x4 - 2.5 TD /4x4	68 → 70	1/1987	→	2/1994	2,3	12
063523620730	**MSN2115**	FIAT	DUCATO	2.4 D - 2.5 D /4x4	53 → 55	1/1982	→	2/1994	2,0	12
063220931010	**MSN296**	FIAT	127 - DUNA - FIORINO - UNO	1.0 - 1.1 - 1.3	37 → 49	4/1977	→	12/1994	0,8	12
063102022010	**MSN418**	FGA	CINQUECENTO - PANDA - PALIO - STILO	1.1 - 1.2 - 1.4	40 → 59	10/1994	→		0,9	12
063102008010	**MSN605**	FIAT	PUNTO	90 1.6	65	1/1994	→	4/1997	0,9	12
063223332010	**MSN626**	FIAT	DUNA - ELBA - FIORINO - RITMO - UNO	1.7 D	40 → 44	10/1979	→	12/1999	1,6	12
063293039010	**MSN639**	VAG	AROSA - GOLF III - LUPO - POLO - VENTO	1.0 - 1.3 - 1.4 - 1.4 i /16V - 1.6	→ 74	11/1991	→	7/2005	0,9	12
063293537010	**MSN642**	BMW	3 - 5 / Touring	316i - 318 - 320 - 523/3/5/8	77 → 142	11/1995	→	2/2005	1,4	12
063103023010	**MSN925**	FGA	BRAVO - DEDRA - DELTA II MAREA	1.6 - 1.6 i.e - 1.6 16V	55 → 76	10/1995	→	10/2001	1,0	12

Codici sostituiti
Replaced references
Ersetzte Artikel-Nr.
Références remplacées
Referencias sustituidas
Referências substituídas
Κωδικοί αντικατάστασης
Kody zamienione
Замененные позиции
Değiştirilen referanslar

OLD		NEW	
LONG	SHORT	LONG	SHORT
063101002010	**MSN601**	063101015010	**MSN829**
063101008010	**MSN797**	063101023010	**MSN410**
063102007010	**MSN794**	063102018010	**MSN923**
063103007010	**MSN606**	063103022010	**MSN924**
063103008010	**MSN607**	063103023010	**MSN925 (until stocks last)**
063111000010	**MSN608**	063111007010	**MSN807**
063223303010	**MSN789**	063223101010	**MSN274**
063227409010	**MSN915**	063227488010	**MSN175**
063227412010	**MSN176/EX**	063227485010	**MSN176 (until stocks last)**
063227417010	**MSN916**	063227486010	**MSN180**
063227419010	**MSN181/EX**	063227489010	**MSN181 (until stocks last)**
063227539010	**MSN541**	063227599010	**MSN541**
063227568010	**MSN194**	063227597010	**MSN787 (until stocks last)**
063227570010	**MSN918**	063227592010	**MSN203**
063227586010	**MSN206**	063227604010	**MSN799 (until stocks last)**
063227598010	**63227598**	063227602010	**MSN199**
063521074080	**MSN2075**	063521074920	**MSN2117**
063521082340	**MSN2082**	063521082390	**MSN2119**
063521092502	**MSN2025**	063521092500	**MSN2025**
063522187590	**MSN2031**	063522230130	**MSN2006**
063522187760	**MSN2032**	063521093570	**MSN2120**
063522230240	**MSN2007**	063521093070	**MSN2009**
063522310260	**MSN2047**	063522630200	**MSN2118**
943252227010	**MSR5073**	063216741010	**MSN521**

Applicazione per marca e veicolo
Vehicle application guide
Zuordnung nach Marke und Fahrzeug
Affectations par marques et véhicules
Aplicación por marca y vehículo
Aplicação por marca e veículo
ρμογή ανά μο
Zastosowanie dla marki i pojazdu
Marka ve araca göre uygulama

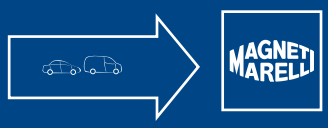

		kW			kW	V	LONG	SHORT
ALFA ROMEO								
145 (930)								
1.4 i.e. 16V T.S.	AR 33503, AR 38501	76	12/1996 → 01/2001		1,4	12	063111007010	**MSN807**
1.4 i.e. 16V T.S.	AR 33503, AR 38501	76	01/1998 → 01/2001		1,3	12	063111027010	**MSN806**
1.6 i.e. 16V T.S.	AR 38201, AR 67601	88	12/1996 → 01/2001		1,4	12	063111007010	**MSN807**
1.8 i.e. 16V	AR 32201	106	03/1998 → 12/2000		1,4	12	063111007010	**MSN807**
1.8 i.e. 16V T.S.	AR 38401, AR 67106	103	12/1996 → 12/1998		1,4	12	063111007010	**MSN807**
1.9 JTD	AR 32302	77	02/1999 → 01/2001		1,8	12	063113002010	**MSN816**
2.0 16V Quadrifoglio	AR 32301	114	03/1998 → 12/2000		1,4	12	063111007010	**MSN807**
2.0 16V T.S.	AR 67204	110	01/1996 → 01/2001		1,4	12	063111007010	**MSN807**
146 (930)								
1.4 i.e. 16V T.S.	AR 33503, AR 38501	76	11/1996 → 01/2001		1,4	12	063111007010	**MSN807**
1.4 i.e. 16V T.S.	AR 33503, AR 38501	76	11/1996 → 01/2001		1,3	12	063111027010	**MSN806**
1.6 i.e. 16V T.S.	AR 38201, AR 67601	88	11/1996 → 01/2001		1,4	12	063111007010	**MSN807**
1.8 i.e. 16V T.S.	AR 32201	106	03/1998 → 01/2001		1,4	12	063111007010	**MSN807**
1.8 i.e. 16V T.S.	AR 38401, AR 67106	103	11/1996 → 02/1999		1,4	12	063111007010	**MSN807**
1.9 JTD	AR 32302	77	02/1999 → 01/2001		1,8	12	063113002010	**MSN816**
1.9 TD	AR 33601, AR 67501	66	12/1994 → 02/1999		1,4	12	063111007010	**MSN807**
2.0 16V Quadrifoglio	AR 32301	114	03/1998 → 12/2000		1,4	12	063111007010	**MSN807**
2.0 16V T.S.	AR 67204	110	01/1996 → 01/2001		1,4	12	063111007010	**MSN807**
147 (937)								
1.6 16V T.SPARK (937AXB1A)	AR 32104	88	01/2001 →		1,4	12	063111007010	**MSN807**
1.6 16V T.SPARK (937AXB1A)	AR 32104	88	01/2001 → 12/2010		1,1	12	063521074110	**MSN2076**
1.6 16V T.SPARK ECO (937AXA1A)	AR 37203	77	01/2001 →		1,4	12	063111007010	**MSN807**
1.6 16V T.SPARK ECO (937AXA1A)	AR 37203	77	01/2001 → 12/2010		1,1	12	063521074110	**MSN2076**
1.9 JTD	182 B9.000	74	06/2003 →		1,8	12	063113002010	**MSN816**
1.9 JTD (937AXD1A)	937 A2.000	85	04/2001 →		1,8	12	063113002010	**MSN816**
2.0 16V T.SPARK (937AXC1_)	AR 32310	110	01/2001 → 09/2004		1,4	12	063111007010	**MSN807**
2.0 16V T.SPARK (937AXC1_)	AR 32310	110	01/2001 → 12/2010		1,1	12	063521074110	**MSN2076**
155 (167)								
1.6 T.S. 16V	AR 67101	88	05/1996 → 01/1998		1,4	12	063111007010	**MSN807**
1.7 T.S. 16V	AR 67106	103	05/1996 → 12/1997		1,4	12	063111007010	**MSN807**
1.8 T.S.	AR 67402	77	01/1996 → 12/1997		1,4	12	063111007010	**MSN807**
2.0 T.S. 16V (167.A2G)	AR 67204	110	01/1996 → 12/1997		1,4	12	063111007010	**MSN807**
156 (932)								
1.6 16V T.SPARK (932A4)	AR 32102, AR 32103, AR 32104, AR 67601	88	09/1997 → 09/2005		1,4	12	063111007010	**MSN807**
1.6 16V T.SPARK (932A4)	AR 32102, AR 32103, AR 32104, AR 67601	88	01/2002 → 09/2005		1,1	12	063521074110	**MSN2076**
1.8 16V T.SPARK (932A3)	AR 32201	106	09/1997 → 10/2000		1,4	12	063111007010	**MSN807**

		kW		i	kW	V	LONG	SHORT
ALFA ROMEO								
156 (932)								
1.8 16V T.SPARK (932A3_)	AR 32205	106	10/2000 → 03/2003		1,4	12	063111007010	**MSN807**
1.8 16V T.SPARK (932A31__)	AR 32205	103	01/2002 → 09/2005		1,1	12	063521074110	**MSN2076**
1.9 JTD (932B2)	AR 32302	77	09/1997 → 10/2000		1,8	12	063113002010	**MSN816**
2.0 16V T.SPARK (932A2)	AR 32301	114	09/1997 → 10/2000		1,4	12	063111007010	**MSN807**
2.0 16V T.SPARK (932A21__)	AR 32310	110	10/2000 → 03/2002		1,4	12	063111007010	**MSN807**
2.0 JTS (932AXA)	937 A1.000	122	03/2002 → 09/2005		1,4	12	063111007010	**MSN807**
2.0 JTS (932AXA)	937 A1.000	122	03/2002 → 09/2005		1,1	12	063521074110	**MSN2076**
156 Sportwagon (932)								
1.6 16V T.SPARK. (932A4)	AR 32102, AR 32103, AR 32104, AR 67601	88	05/2000 → 03/2003		1,4	12	063111007010	**MSN807**
1.6 16V T.SPARK. (932A4)	AR 32102, AR 32103, AR 32104, AR 67601	88	01/2002 → 12/2005		1,1	12	063521074110	**MSN2076**
1.8 16V T.SPARK (932A3)	AR 32201	106	05/2000 → 10/2000		1,4	12	063111007010	**MSN807**
1.8 16V T.SPARK (932B31__)	AR 32205	103	10/2000 → 03/2003		1,4	12	063111007010	**MSN807**
1.8 16V T.SPARK (932B31__)	AR 32205	103	01/2002 → 12/2005		1,1	12	063521074110	**MSN2076**
1.9 JTD (932B2)	AR 32302	77	05/2000 → 10/2000		1,4	12	063111007010	**MSN807**
1.9 JTD (932B2B__)	AR 37101	81	10/2000 → 05/2001		1,8	12	063113002010	**MSN816**
2.0	932 A2.000	119	03/2002 → 03/2003		1,4	12	063111007010	**MSN807**
2.0	932 A2.000	119	03/2002 → 12/2005		1,1	12	063521074110	**MSN2076**
2.0 16V T.SPARK (932A2)	AR 32301	114	05/2000 → 10/2000		1,4	12	063111007010	**MSN807**
2.0 16V T.SPARK (932B21__)	AR 32310	110	10/2000 → 12/2001		1,4	12	063111007010	**MSN807**
2.0 JTS (932BXA)	937 A1.000	122	03/2002 → 05/2006		1,4	12	063111007010	**MSN807**
2.0 JTS (932BXA)	937 A1.000	122	03/2002 → 12/2005		1,1	12	063521074110	**MSN2076**
166 (936)								
2.0 T.Spark (936A3A__)	AR 34103	114	09/1998 → 10/2000		1,4	12	063111007010	**MSN807**
2.0 T.Spark (936A3A__)	AR 34103	114	09/1998 → 10/2000		1,3	12	063111007010	**MSN806**
2.0 T.Spark (936A3A__)	AR 36301	110	10/2000 → 04/2006		1,4	12	063111007010	**MSN807**
2.0 T.Spark (936A3A__)	AR 36301	110	10/2000 →		1,3	12	063111007010	**MSN806**
AR 6 Furgonato (280)								
2.4 D	8144.61.200	53	04/1985 → 02/1986		2,5	12	063217154010	**MSN230**
2.5 D	8144.67.220	55	03/1986 → 12/1989		2,5	12	063217154010	**MSN230**
AR 8 Furgonato (280)								
2.4 D	8140.61.200	53	04/1978 → 08/1986		2,5	12	063217148010	**MSN229**
2.4 D	8140.61.200	53	01/1985 → 08/1986		2,5	12	063217410010	**MSN242**
2.4 TD	8140.21.200 D.I.	68	04/1985 → 12/1989		2,5	12	063217148010	**MSN229**
2.5 D	8144.67.220	55	09/1986 → 12/1989		2,5	12	063217148010	**MSN229**
2.5 D	8144.67.220	55	09/1986 → 12/1989		2,5	12	063217410010	**MSN242**

		kW			kW	V	LONG	SHORT
ALFA ROMEO								
AR 8 Pianale piatto / Telaio (280)								
2.4 D	8140.61.200	53	04/1978 → 08/1986		2,5	12	063217148010	**MSN229**
2.4 D	8140.61.200	53	01/1985 → 08/1986		2,5	12	063217148010	**MSN242**
2.4 TD	8140.21.200 D.I.	68	04/1985 → 12/1988		2,5	12	063217148010	**MSN229**
2.5 D	8144.67.220	55	09/1986 → 12/1989		2,5	12	063217148010	**MSN229**
2.5 D	8144.67.220	55	09/1986 → 12/1989		2,5	12	063217410010	**MSN242**
Giulietta (940)								
1.4 TB		88	04/2010 →		1,0	12	063280060010	**MSN8060**
1.4 TB		125	04/2010 →		1,0	12	063280060010	**MSN8060**
1.4 TB		85	04/2010 →		1,0	12	063280060010	**MSN8060**
1.4 TB		120	04/2010 →		1,0	12	063280060010	**MSN8060**
1.8 TBi		173	04/2010 →		1,0	12	063280060010	**MSN8060**
GT								
1.8 TS	AR 32205	103	11/2003 →		1,1	12	063521074110	**MSN2076**
2.0 JTS	932 A2.000	119	12/2006 →		1,1	12	063521074110	**MSN2076**
2.0 JTS	932 A2.000, 937 A1.000	121	11/2003 →		1,1	12	063521074110	**MSN2076**
GTV (916_)								
1.8 16V (916C3)	AR 32201	106	05/1998 →		1,4	12	063111007010	**MSN807**
2.0 JTS	937 A1.000	121	04/2003 → 12/2005		1,1	12	063521074110	**MSN2076**
2.0 T.SPARK 16V (916. C2__, 916C2C00)	AR 16201, AR 32310	110	06/1995 →		1,4	12	063111007010	**MSN807**
2.0 T.SPARK 16V (916. C2__, 916C2C00)	AR 16201, AR 32310	110	01/1998 →		1,3	12	063111027010	**MSN806**
2.0 T.SPARK 16V (916. C2__, 916C2C00)	AR 16201, AR 32310	110	07/2002 → 12/2005		1,1	12	063521074110	**MSN2076**
2.0 T.SPARK 16V (916C2C)	AR 32301	114	05/1998 → 08/2000		1,4	12	063111007010	**MSN807**
2.0 T.SPARK 16V (916C2C)	AR 32301	114	05/1998 → 08/2000		1,3	12	063111027010	**MSN806**
MITO (955)								
1.3 JTDM	199 A3.000	66	12/2008 →		1,3	12	063280060010	**MSN8045**
1.4		77	08/2010 →		1,0	12	063280060010	**MSN8060**
1.4		70	09/2008 →		1,0	12	063280060010	**MSN8060**
1.4		51	05/2011 →		1,0	12	063280060010	**MSN8060**
1.4		58	09/2008 →		1,0	12	063280060010	**MSN8060**
SPIDER (916S_)								
1.8 16V (916S3)	AR 32201	106	05/1998 → 02/2003		1,4	12	063111007010	**MSN807**
2.0 JTS	937 A1.000	121	04/2003 → 04/2005		1,1	12	063521074110	**MSN2076**
2.0 T.SPARK 16V (916S2B)	AR 32301	114	05/1998 → 08/2000		1,4	12	063111007010	**MSN807**
2.0 T.SPARK 16V (916S2B)	AR 32301	114	05/1998 → 08/2000		1,3	12	063111027010	**MSN806**
2.0 T.SPARK 16V (916S2C00)	AR 16201, AR 32310	110	06/1995 → 04/2005		1,4	12	063111007010	**MSN807**
2.0 T.SPARK 16V (916S2C00)	AR 16201, AR 32310	110	01/1998 → 04/2005		1,3	12	063111027010	**MSN806**
2.0 T.SPARK 16V (916S2C00)	AR 16201, AR 32310	110	07/2002 → 04/2005		1,1	12	063521074110	**MSN2076**

		kW			kW	V	LONG	SHORT
ARO 10								
1.9 D		48	09/1992 →		1,4	12	063521081800	**MSN2020**
1.9 TD	F8QT	69	06/1997 →		1,4	12	063521081800	**MSN2020**
AUDI								
80 (89, 89Q, 8A, B3)								
1.6	ABB	75	08/1990 → 10/1991		1,1	12	063521070680	**MSN2070**
1.6 D	JK	40	10/1987 → 07/1988		1,7	12	063521101060	**MSN2028**
1.6 TD	RA, SB	59	04/1988 → 08/1991		1,7	12	063521101060	**MSN2028**
1.8	RU	55	10/1987 → 01/1990		1,1	12	063521070680	**MSN2070**
1.8	SD	83	09/1986 → 09/1987		1,1	12	063521070680	**MSN2070**
1.8 E	DZ	82	09/1986 → 09/1987		1,1	12	063521070680	**MSN2070**
1.8 E quattro	DZ	82	09/1986 → 08/1991		1,1	12	063521070680	**MSN2070**
1.8 quattro	SD	83	09/1986 → 07/1988		1,1	12	063521070680	**MSN2070**
1.8 S	JN, NE, PM	66	10/1987 → 10/1991		1,1	12	063521070680	**MSN2070**
1.8 S	SF	65	10/1987 → 12/1990		1,1	12	063521070680	**MSN2070**
1.8 S quattro	JN, NE, PM	66	09/1986 → 08/1991		1,1	12	063521070680	**MSN2070**
1.8 S quattro	SF	65	09/1986 → 07/1990		1,1	12	063521070680	**MSN2070**
1.9 D	1Y	50	08/1989 → 08/1991		1,7	12	063521101060	**MSN2028**
2.0	AAD	82	10/1990 → 08/1991		1,1	12	063521070680	**MSN2070**
2.0 E	3A	83	08/1988 → 10/1990		1,1	12	063521070680	**MSN2070**
2.0 E QUATTRO	3A	83	08/1988 → 10/1990		1,1	12	063521070680	**MSN2070**
2.0 QUATTRO	AAD	85	08/1988 → 10/1990		1,1	12	063521070680	**MSN2070**
80 (8C, B4)								
1.6 E	ADA	74	10/1994 → 12/1994		1,1	12	063521070680	**MSN2070**
1.9 TD	AAZ	55	09/1991 → 12/1994		1,7	12	063521101060	**MSN2028**
1.9 TD	AAZ	55	09/1991 → 12/1994		1,8	12	063521101380	**MSN2088**
1.9 TDI	1Z	66	09/1991 → 12/1994		1,7	12	063521101060	**MSN2028**
1.9 TDI	1Z	66	09/1991 → 12/1994		1,8	12	063521101380	**MSN2088**
2.0	ABT	66	09/1991 → 12/1994		1,1	12	063521070680	**MSN2070**
2.0 E	ABK	85	09/1991 → 12/1994		1,1	12	063521070680	**MSN2070**
2.0 E 16V	ACE	103	08/1992 → 12/1994		1,1	12	063521070680	**MSN2070**
2.0 E 16V quattro	ACE	103	08/1992 → 12/1994		1,1	12	063521070680	**MSN2070**
2.0 E quattro	ABK	85	09/1991 → 12/1994		1,1	12	063521070680	**MSN2070**
80 AVANT (8C, B4)								
1.6 E	ADA	74	10/1994 → 07/1995		1,1	12	063521070680	**MSN2070**
1.9 TD	AAZ	55	09/1991 → 12/1994		1,7	12	063521101060	**MSN2028**
1.9 TD	AAZ	55	07/1993 → 12/1994		1,8	12	063521101380	**MSN2088**
1.9 TDI	1Z	66	08/1992 → 07/1995		1,7	12	063521101060	**MSN2028**
1.9 TDI	1Z	66	08/1992 → 07/1995		1,8	12	063521101060	**MSN2028**
2.0	ABT	66	08/1992 → 06/1995		1,1	12	063521070680	**MSN2070**
2.0 E	ABK	85	08/1992 → 07/1995		1,1	12	063521070680	**MSN2070**
2.0 E 16V	ACE	103	02/1993 → 07/1995		1,1	12	063521070680	**MSN2070**
2.0 E 16V quattro	ACE	103	07/1994 → 07/1995		1,1	12	063521070680	**MSN2070**
2.0 quattro	ADW	79	11/1993 → 07/1995		1,1	12	063521070680	**MSN2070**
90 (89, 89Q, 8A, B3)								
1.6 TD	RA, SB	59	07/1987 → 09/1991		1,7	12	063521101060	**MSN2028**

		kW			kW	V	LONG	SHORT
AUDI								
100 (44, 44Q, C3)								
1.8	DS, JW, NP	66	01/1988 → 07/1989		1,1	12	063521070680	**MSN2070**
1.8	SH	65	01/1988 → 07/1988		1,1	12	063521070680	**MSN2070**
1.8 Cat.	4B, PH	66	01/1988 → 11/1990		1,1	12	063521070680	**MSN2070**
1.8 quattro	JW, NP	66	01/1988 → 04/1988		1,1	12	063521070680	**MSN2070**
1.8 quattro	SH	65	01/1988 → 04/1988		1,1	12	063521070680	**MSN2070**
1.8 quattro	4B, PH	66	01/1988 → 04/1988		1,1	12	063521070680	**MSN2070**
100 (4A, C4)								
2.0	AAE	74	08/1991 → 06/1994		1,1	12	063521070680	**MSN2070**
2.0 E	AAD, ABK	85	08/1991 → 06/1994		1,1	12	063521070680	**MSN2070**
2.0 E 16V	ACE	103	01/1992 → 06/1994		1,1	12	063521070680	**MSN2070**
2.0 E 16V quattro	ACE	103	07/1992 → 06/1994		1,1	12	063521070680	**MSN2070**
2.0 E quattro	AAD	85	08/1991 → 07/1992		1,1	12	063521070680	**MSN2070**
100 Avant (44, 44Q, C3)								
1.8	DS, JW, NP	66	01/1988 → 07/1989		1,1	12	063521070680	**MSN2070**
1.8	SH	65	01/1988 → 07/1988		1,1	12	063521070680	**MSN2070**
1.8 Cat.	4B, PH	66	01/1988 → 07/1989		1,1	12	063521070680	**MSN2070**
1.8 quattro	SH	65	01/1988 → 04/1988		1,1	12	063521070680	**MSN2070**
1.8 quattro Cat.	4B, PH	66	01/1988 → 07/1988		1,1	12	063521070680	**MSN2070**
100 Avant (4A, C4)								
2.0 E	AAD, ABK	85	09/1991 → 06/1994		1,1	12	063521070680	**MSN2070**
2.0 E	AAE	74	09/1991 → 07/1993		1,1	12	063521070680	**MSN2070**
2.0 E 16V	ACE	103	09/1991 → 07/1993		1,1	12	063521070680	**MSN2070**
2.0 E quattro	AAD	85	08/1991 → 07/1992		1,1	12	063521070680	**MSN2070**
A2 (8Z0)								
1.2 TDI	ANY	45	10/2003 → 08/2005		1,8	12	063521240260	**MSN2110**
1.4	AUA, BBY	55	06/2002 → 08/2005		0,9	12	063521204000	**MSN2093**
1.4	AUA, BBY	55	11/2001 → 05/2002		1,1	12	063521210160	**MSN2097**
1.4 TDI	AMF, BHC	55	02/2000 → 08/2005		2,0	12	063521250420	**MSN2112**
1.4 TDI	ATL	66	11/2003 → 08/2005		2,0	12	063521250420	**MSN2112**
1.6 FSI	BAD	81	06/2002 → 08/2005		0,9	12	063521204000	**MSN2093**
1.6 FSI	BAD	81	05/2002 → 05/2002		1,1	12	063521210160	**MSN2097**
A3 (8L1)								
1.6	AEH, AKL, APF	74	09/1996 → 06/1998		0,9	12	063521120380	**MSN2089**
1.6	AEH, AKL, APF	74	04/1999 → 08/2000		1,1	12	063521210260	**MSN2098**
1.6	AEH, AKL, APF	74	06/1998 → 08/2000		1,1	12	063521210280	**MSN2099**
1.6	AVU, BFQ	75	08/2000 → 06/2003		1,1	12	063521210280	**MSN2099**
1.8	AGN, APG	92	09/1996 → 06/1998		0,9	12	063521120380	**MSN2089**
1.8	AGN, APG	92	07/1998 → 04/2003		1,1	12	063521210260	**MSN2098**
1.8	AGN, APG	92	06/1998 → 04/2003		1,1	12	063521210280	**MSN2099**
1.8 quattro		92	04/1999 → 06/1999		1,1	12	063521210260	**MSN2098**
1.8 quattro		92	08/1998 → 06/1999		1,1	12	063521210280	**MSN2099**
1.8 T	AGU, AQA, ARZ, AUM	110	12/1996 → 06/1998		0,9	12	063521120380	**MSN2089**
1.8 T	AGU, AQA, ARZ, AUM	110	07/1998 → 06/2003		1,1	12	063521210260	**MSN2098**
1.8 T	AGU, AQA, ARZ, AUM	110	06/1998 → 06/2003		1,1	12	063521210280	**MSN2099**

		kW		i	kW	V	LONG	SHORT
AUDI								
A3 (8L1)								
1.8 T	AJQ, APP, ARY, AUQ	132	04/1999 → 06/2003		1,1	12	063521210260	**MSN2098**
1.8 T	AJQ, APP, ARY, AUQ	132	12/1998 → 06/2003		1,1	12	063521210280	**MSN2099**
1.8 T quattro	AGU, AQA, ARX	110	08/1997 → 06/1998		0,9	12	063521120380	**MSN2089**
1.8 T quattro	AGU, AQA, ARX	110	07/1998 → 06/2003		1,1	12	063521210260	**MSN2098**
1.8 T quattro	AGU, AQA, ARX	110	06/1998 → 06/2003		1,1	12	063521210280	**MSN2099**
1.8 T quattro	AJQ, ARY	132	04/1999 → 06/2003		1,1	12	063521210260	**MSN2098**
1.8 T quattro	AJQ, ARY	132	10/1998 → 06/2003		1,1	12	063521210280	**MSN2099**
1.9 TDI	AGR, ALH	66	09/1996 → 06/2001		2,0	12	063521250350	**MSN2111**
1.9 TDI	AGR, ALH	66	11/1997 → 11/1997		2,0	12	063521250420	**MSN2112**
1.9 TDI	AHF, ASV	81	08/1997 → 06/2001	AUTO	2,0	12	063521250350	**MSN2111**
1.9 TDI	AHF, ASV	81	08/1997 → 06/2001	MAN	2,0	12	063521250420	**MSN2112**
1.9 TDI	ASZ	96	08/2000 → 06/2003		1,1	12	063521210280	**MSN2099**
1.9 TDI	ASZ	96	09/2001 → 09/2001		2,0	12	063521250420	**MSN2112**
1.9 TDI	ATD, AXR	74	10/2000 → 09/2001		2,0	12	063521250420	**MSN2112**
1.9 TDI quattro	ASZ	96	08/2000 → 06/2003		1,1	12	063521210280	**MSN2099**
1.9 TDI quattro	ASZ	96	09/2001 → 09/2001		2,0	12	063521250420	**MSN2112**
S3 quattro	AMK, APY, AUL	154	03/1999 → 04/2002		2,0	12	063521250480	**MSN2113**
S3 quattro	BAM	165	10/2001 → 06/2003		2,0	12	063521250480	**MSN2113**
A3 (8P1)								
1.2 TSI	CBZB	77	04/2010 →		1,0	12	063521204100	**MSN2096**
1.4 TFSI	CAXC, CMSA	92	09/2007 →		1,1	12	063521214080	**MSN2102**
1.6	BGU, BSE, BSF, CCSA, CMXA	75	05/2003 →		1,0	12	063521204080	**MSN2095**
1.6	BGU, BSE, BSF, CCSA, CMXA	75	05/2003 → 05/2005		1,1	12	063521214020	**MSN2101**
1.6 E-Power	CMXA	75	01/2011 →		1,0	12	063521204080	**MSN2095**
1.6 FSI	BAG, BLF, BLP	85	12/2004 → 09/2007		1,0	12	063521204060	**MSN2094**
1.6 FSI	BAG, BLF, BLP	85	08/2003 → 12/2004		1,1	12	063521214020	**MSN2101**
1.8 TFSI	BYT, BZB, CDAA	118	11/2006 → 06/2007		1,1	12	063521214080	**MSN2102**
1.8 TFSI quattro	CDAA	118	07/2008 → →		1,1	12	063521214020	**MSN2101**
1.8 TFSI quattro	CDAA	118	07/2008 → →		1,1	12	063521214080	**MSN2102**
1.9 TDI	BKC, BLS, BXE	77	06/2003 → 05/2009		1,7	12	063521230120	**MSN2104**
2.0		120	06/2006 → 06/2008		1,7	12	063521230140	**MSN2105**
2.0		120	06/2006 → 06/2008		1,7	12	063521230160	**MSN2106**
2.0 FSI	AXW, BLR, BLX, BLY, BMB, BVY,BVZ	110	05/2003 → 06/2008	MAN	1,1	12	063521214020	**MSN2101**

		kW			kW	V	LONG	SHORT
AUDI								
A3 (8P1)								
2.0 FSI	AXW, BLR, BLX, BLY, BMB, BVY,BVZ	110	05/2003 → 06/2008	MAN	1,1	12	063521214080	**MSN2102**
2.0 TDI	AZV, CBAA, CFFA	100	05/2003 → 06/2008		1,7	12	063521230160	**MSN2106**
2.0 TDI	BMM	103	06/2005 → 06/2008		1,7	12	063521230140	**MSN2105**
2.0 TDI	BMM	103	06/2005 → 06/2008		1,7	12	063521230160	**MSN2106**
2.0 TDI	BMN, CBBB, CFGB	125	03/2006 → 06/2008		1,7	12	063521230160	**MSN2106**
2.0 TDI	BUY	120	06/2006 → 06/2008		1,7	12	063521230140	**MSN2105**
2.0 TDI 16V	BKD, CBAB, CFFB, CLJA	103	05/2003 → 06/2008		1,7	12	063521230160	**MSN2106**
2.0 TDI 16V quattro	BKD, CBAB, CFFB	103	11/2004 → 06/2008		1,7	12	063521230160	**MSN2106**
2.0 TDI quattro	AZV	100	05/2003 → 06/2008		1,7	12	063521230140	**MSN2105**
2.0 TDI quattro	AZV	100	05/2003 → 06/2008		1,7	12	063521230160	**MSN2106**
2.0 TDI quattro	BMM	103	01/2006 → 06/2008		1,7	12	063521230140	**MSN2105**
2.0 TDI quattro	BMM	103	01/2006 → 06/2008		1,7	12	063521230160	**MSN2106**
2.0 TDI quattro	BMN, CBBB, CFGB	125	03/2006 → 06/2008		1,7	12	063521230160	**MSN2106**
2.0 TFSI	AXX, BWA, CAWB, CCZA	147	10/2007 → 06/2008		1,1	12	063521214020	**MSN2101**
2.0 TFSI	AXX, BWA, CAWB, CCZA	147	10/2007 → 06/2008		1,0	12	063521214120	**MSN2103**
2.0 TFSI quattro	AXX, BWA, CCZA	147	09/2004 → 06/2008		1,1	12	063521214020	**MSN2101**
2.0 TFSI quattro	AXX, BWA, CCZA	147	07/2008 →		1,0	12	063521214120	**MSN2103**
3.2 V6 quattro	BDB, BMJ, BUB	184	07/2003 →		1,7	12	063521230160	**MSN2106**
S3 quattro	BHZ, CDLA	195	11/2006 →		1,1	12	063521214020	**MSN2101**
S3 quattro	BHZ, CDLA	195	07/2008 →		1,0	12	063521214120	**MSN2103**
S3 quattro	BZC, CDLC	188	02/2007 →		1,1	12	063521214020	**MSN2101**
S3 quattro	BZC, CDLC	188	07/2008 →		1,0	12	063521214120	**MSN2103**
A3 Cabriolet								
1.2 TFSI	CBZB	77	03/2010 →		1,0	12	063521204100	**MSN2096**
1.6	BSE	75	09/2008 → 05/2010		1,0	12	063521204080	**MSN2095**
1.8 TFSI	BZB, CDAA	118	04/2008 → 01/2009		1,1	12	063521214080	**MSN2102**
1.8 TFSI	BZB, CDAA	118	04/2008 → 01/2009		1,0	12	063521214120	**MSN2103**
1.9 TDI	BLS	77	04/2008 → 05/2009		1,7	12	063521230120	**MSN2104**
2.0 TFSI	CAWB, CCZA	147	04/2008 → 01/2009		1,1	12	063521214020	**MSN2101**
2.0 TFSI	CAWB, CCZA	147	04/2008 → 01/2009		1,0	12	063521214120	**MSN2103**
A3 Sportback (8PA)								
1.2 TSI	CBZB	77	04/2010 →		1,0	12	063521204100	**MSN2096**
1.4 TFSI	CAXC, CMSA	92	09/2007 →		1,1	12	063521214080	**MSN2102**
1.6	BGU, BSE, BSF, CCSA, CMXA	75	09/2004 →		1,0	12	063521204080	**MSN2095**
1.6	BGU, BSE, BSF, CCSA, CMXA	75	09/2004 → 05/2005		1,1	12	063521214020	**MSN2101**

		kW		i	kW	V	LONG	SHORT
AUDI								
A3 Sportback (8PA)								
1.6 E-Power	CMXA	75	01/2011 →		1,0	12	063521204080	**MSN2095**
1.6 FSI	BLF, BLP	85	12/2004 → 09/2007		1,0	12	063521204060	**MSN2094**
1.6 FSI	BLF, BLP	85	09/2004 → 12/2004		1,1	12	063521214020	**MSN2101**
1.8 TFSI	BYT, BZB, CDAA	118	11/2006 → 06/2007		1,1	12	063521214080	**MSN2102**
1.8 TFSI	BYT, BZB, CDAA	118	06/2007 → 06/2008		1,0	12	063521214120	**MSN2103**
1.8 TFSI quattro	CDAA	118	07/2008 →		1,1	12	063521214020	**MSN2101**
1.8 TFSI quattro	CDAA	118	07/2008 →		1,1	12	063521214080	**MSN2102**
1.9 TDI	BKC, BLS, BXE	77	09/2004 → 05/2006		1,7	12	063521230120	**MSN2104**
2.0		120	06/2006 → 06/2008		1,7	12	063521230140	**MSN2105**
2.0		120	06/2006 → 06/2008		1,7	12	063521230160	**MSN2106**
2.0 FSI	BLR, BLX, BLY, BMB, BVY, BVZ	110	09/2004 → 06/2008		1,1	12	063521214020	**MSN2101**
2.0 TDI	AZV, CBAA, CFFA	100	09/2004 → 06/2008		1,7	12	063521230160	**MSN2106**
2.0 TDI	BMM	103	06/2005 → 06/2008		1,7	12	063521230140	**MSN2105**
2.0 TDI	BMM	103	06/2005 → 06/2008		1,7	12	063521230160	**MSN2106**
2.0 TDI	BMN, CBBB, CFGB	125	03/2006 → 06/2008		1,7	12	063521230160	**MSN2106**
2.0 TDI	BUY	120	06/2006 → 06/2008		1,7	12	063521230140	**MSN2105**
2.0 TDI 16V	BKD, CBAB, CFFB, CLJA	103	09/2004 → 06/2008		1,7	12	063521230160	**MSN2106**
2.0 TDI 16V quattro	BKD, CBAB, CFFB	103	11/2005 → 05/2007		1,7	12	063521230160	**MSN2106**
2.0 TDI quattro	BMM	103	01/2006 → 06/2008		1,7	12	063521230140	**MSN2105**
2.0 TDI quattro	BMM	103	01/2006 → 06/2008		1,7	12	063521230160	**MSN2106**
2.0 TDI quattro	BMN, CBBB, CFGB	125	03/2006 → 06/2008		1,7	12	063521230160	**MSN2106**
2.0 TFSI	AXX, BPY, BWA, CAWB, CBFA, CCZA	147	09/2004 → 10/2005		1,1	12	063521214020	**MSN2101**
2.0 TFSI	AXX, BPY, BWA, CAWB, CBFA, CCZA	147	09/2004 →		1,0	12	063521214120	**MSN2103**
2.0 TFSI quattro	AXX, BWA, CCZA	147	09/2004 → 06/2008		1,1	12	063521214020	**MSN2101**
2.0 TFSI quattro	AXX, BWA, CCZA	147	09/2005 → 06/2008		1,0	12	063521214120	**MSN2103**
3.2 V6 quattro	BMJ, BUB	184	09/2004 →		1,7	12	063521230160	**MSN2106**
S3 quattro	BHZ, CDLA	195	07/2008 →		1,1	12	063521214020	**MSN2101**
S3 quattro	BHZ, CDLA	195	07/2008 →		1,0	12	063521214120	**MSN2103**
S3 quattro	CDLC	188	07/2008 →		1,1	12	063521214020	**MSN2101**
S3 quattro	CDLC	188	07/2008 →		1,0	12	063521214120	**MSN2103**
A4 (8D2, B5)								
1.6	ADP, AHL, ANA, ARM	74	01/1995 → 07/2000		1,1	12	063521070680	**MSN2070**
1.6	ADP, AHL, ANA, ARM	74	05/1998 → 07/1999		1,1	12	063521070730	**MSN2071**

		kW			kW	V	LONG	SHORT
AUDI								
A4 (8D2, B5)								
1.6	ALZ	75	07/2000 → 10/2000		1,1	12	063521070730	**MSN2071**
1.8	ADR, APT, ARG, AVV	92	01/1995 → 05/1998		1,1	12	063521070680	**MSN2070**
1.8	ADR, APT, ARG, AVV	92	05/1998 → 10/2000		1,1	12	063521070730	**MSN2071**
1.8	AFY	85	04/1995 → 05/1998		1,1	12	063521070680	**MSN2070**
1.8	AFY	85	05/1998 → 06/2000		1,1	12	063521070730	**MSN2071**
1.8 quattro	ADR, APT, ARG	92	01/1995 → 05/1998		1,1	12	063521070680	**MSN2070**
1.8 quattro	ADR, APT, ARG	92	05/1998 → 10/2000		1,1	12	063521070730	**MSN2071**
1.8 quattro	AFY	85	07/1995 → 05/1998		1,1	12	063521070680	**MSN2070**
1.8 quattro	AFY	85	05/1998 → 11/2000		1,1	12	063521070730	**MSN2071**
1.8 T	AEB, ANB, APU, ARK, AWT	110	01/1995 → 05/1998		1,1	12	063521070680	**MSN2070**
1.8 T	AEB, ANB, APU, ARK, AWT	110	05/1998 → 10/2000		1,1	12	063521070730	**MSN2071**
1.8 T	AJL	132	12/1997 → 12/1998		1,1	12	063521070730	**MSN2071**
1.8 T quattro	AEB, ANB, APU, ARK, AWT	110	01/1995 → 05/1998		1,1	12	063521070680	**MSN2070**
1.8 T quattro	AEB, ANB, APU, ARK, AWT	110	05/1998 → 10/2000		1,1	12	063521070730	**MSN2071**
1.8 T quattro	AJL	132	12/1997 → 10/2000		1,1	12	063521070730	**MSN2071**
1.9 TDI	1Z, AHH, AHU	66	01/1995 → 07/1998		1,7	12	063521101060	**MSN2028**
1.9 TDI	AFF	55	03/1996 → 06/2000		1,7	12	063521101060	**MSN2028**
1.9 TDI	AFN, AVG	81	02/1996 → 06/2000		1,7	12	063521101060	**MSN2028**
1.9 TDI	AJM	85	03/2000 → 11/2000		1,7	12	063521101060	**MSN2028**
1.9 TDI	AJM	85	03/2000 → 11/2000		1,8	12	063521240200	**MSN2108**
1.9 TDI quattro	AFN, AVG	81	09/1996 → 01/2000		1,7	12	063521101060	**MSN2028**
1.9 TDI quattro	AJM, ATJ	85	03/2000 → 10/2000		1,7	12	063521101060	**MSN2028**
1.9 TDI quattro	AJM, ATJ	85	03/2000 → 10/2000		1,8	12	063521240200	**MSN2108**
A4 (8E2, B6)								
1.6	ALZ	75	11/2000 → 06/2004		1,1	12	063521070730	**MSN2071**
1.6	ALZ	75	07/2004 → 12/2004		1,2	12	063521074270	**MSN2077**
1.8 T	AMB	125	07/2001 → 06/2002		1,1	12	063521070730	**MSN2071**
1.8 T	AVJ	110	12/2000 → 06/2002		1,1	12	063521070730	**MSN2071**
1.8 T	BEX	140	11/2002 → 06/2004		1,1	12	063521070730	**MSN2071**
1.8 T	BEX	140	07/2004 → 12/2004		1,2	12	063521074270	**MSN2077**
1.8 T	BFB, BKB	120	07/2002 → 06/2004		1,1	12	063521070730	**MSN2071**
1.8 T	BFB, BKB	120	07/2004 → 12/2004		1,2	12	063521074270	**MSN2077**
1.8 T quattro	AMB	125	07/2001 → 06/2002		1,1	12	063521070730	**MSN2071**
1.8 T quattro	AVJ	110	12/2000 → 06/2002		1,1	12	063521070730	**MSN2071**
1.8 T quattro	BEX	140	11/2002 → 06/2004		1,1	12	063521070730	**MSN2071**
1.8 T quattro	BEX	140	07/2004 → 12/2004		1,2	12	063521074270	**MSN2077**
1.8 T quattro	BFB	120	07/2002 → 06/2004		1,1	12	063521070730	**MSN2071**
1.8 T quattro	BFB	120	07/2004 → 12/2004		1,2	12	063521074270	**MSN2077**
1.9 TDI	AVB	74	05/2001 → 05/2004		1,7	12	063521101060	**MSN2028**
1.9 TDI	AVB	74	05/2001 → 05/2004		1,8	12	063521101380	**MSN2088**

		kW			kW	V	LONG	SHORT
AUDI								
A4 (8E2, B6)								
1.9 TDI	AVF, AWX	96	12/2000 → 12/2004		1,8	12	063521240200	**MSN2108**
1.9 TDI	BKE	85	06/2004 → 12/2004		1,7	12	063521101060	**MSN2028**
1.9 TDI	BKE	85	06/2004 → 12/2004		1,8	12	063521101380	**MSN2088**
1.9 TDI quattro	AVF	96	11/2001 → 12/2004		1,8	12	063521240200	**MSN2108**
2.0	ALT	96	12/2000 → 06/2004		1,1	12	063521070730	**MSN2071**
2.0	ALT	96	07/2004 → 12/2004		1,2	12	063521074270	**MSN2077**
2.0 FSI	AWA	110	07/2002 → 06/2004		1,1	12	063521070730	**MSN2071**
2.0 FSI	AWA	110	07/2004 → 12/2004		1,2	12	063521074270	**MSN2077**
3.0	ASN, AVK	162	11/2000 → 12/2004		1,7	12	063521101060	**MSN2028**
3.0	ASN, AVK	162	12/2000 → 12/2004		1,8	12	063521101380	**MSN2088**
3.0 quattro	ASN, AVK	162	12/2000 → 12/2004		1,7	12	063521101060	**MSN2028**
3.0 quattro	ASN, AVK	162	12/2000 → 12/2004		1,8	12	063521101380	**MSN2088**
A4 (8EC)								
1.6	ALZ	75	11/2004 → 06/2008		1,2	12	063521074270	**MSN2077**
1.8 T	BFB	120	11/2004 → 06/2008		1,2	12	063521074270	**MSN2077**
1.8 T quattro	BFB	120	11/2004 → 06/2008		1,2	12	063521074270	**MSN2077**
1.9 TDI	BKE, BRB	85	11/2004 →		1,7	12	063521101060	**MSN2028**
1.9 TDI	BKE, BRB	85	11/2004 → 11/2005		1,8	12	063521101380	**MSN2088**
2.0	ALT	96	11/2004 → 06/2008		1,2	12	063521074270	**MSN2077**
2.0 TFSI	BGB, BPG, BWE, BWT	147	11/2004 → 06/2008		1,2	12	063521074270	**MSN2077**
2.0 TFSI	BUL	162	06/2005 → 06/2008		1,2	12	063521074270	**MSN2077**
2.0 TFSI quattro	BGB, BPG, BWE, BWT	147	11/2004 → 06/2008		1,2	12	063521074270	**MSN2077**
2.0 TFSI quattro	BUL	162	06/2005 → 06/2008		1,2	12	063521074270	**MSN2077**
A4 Avant (8D5, B5)								
1.6	ADP, AHL, ANA, ARM	74	03/1996 → 07/2000		1,1	12	063521070680	**MSN2070**
1.6	ADP, AHL, ANA, ARM	74	05/1998 → 07/1999		1,1	12	063521070730	**MSN2071**
1.6	ALZ	75	07/2000 → 09/2001		1,1	12	063521070730	**MSN2071**
1.8	ADR, APT, ARG, AVV	92	02/1996 → 05/1998		1,1	12	063521070680	**MSN2070**
1.8	ADR, APT, ARG, AVV	92	05/1998 → 07/1999		1,1	12	063521070730	**MSN2071**
1.8	AFY	85	07/1995 → 05/1998		1,1	12	063521070680	**MSN2070**
1.8	AFY	85	05/1998 → 12/1998		1,1	12	063521070730	**MSN2071**
1.8 quattro	ADR, APT, ARG	92	01/1996 → 05/1998		1,1	12	063521070680	**MSN2070**
1.8 quattro	ADR, APT, ARG	92	05/1998 → 09/2001		1,1	12	063521070730	**MSN2071**
1.8 quattro	AFY	85	07/1995 → 05/1998		1,1	12	063521070680	**MSN2070**
1.8 quattro	AFY	85	05/1998 → 09/2001		1,1	12	063521070730	**MSN2071**
1.8 T	AEB, ANB, APU, ARK, AWT	110	03/1996 → 05/1998		1,1	12	063521070680	**MSN2070**
1.8 T	AEB, ANB, APU, ARK, AWT	110	05/1998 → 09/2001		1,1	12	063521070730	**MSN2071**
1.8 T	AJL	132	12/1997 → 09/2001		1,1	12	063521070730	**MSN2071**
1.8 T quattro	AEB, ANB, APU, ARK, AWT	110	02/1996 → 05/1998		1,1	12	063521070680	**MSN2070**
1.8 T quattro	AEB, ANB, APU, ARK, AWT	110	05/1998 → 12/1998		1,1	12	063521070730	**MSN2071**

		kW			kW	V	LONG	SHORT
AUDI								
A4 Avant (8D5, B5)								
1.8 T quattro	AJL	132	12/1997 → 09/2001		1,1	12	063521070730	**MSN2071**
1.9 TDI	1Z, AHH, AHU	66	02/1996 → 12/1998		1,7	12	063521101060	**MSN2028**
1.9 TDI	AFF	55	03/1996 → 09/2001		1,7	12	063521101060	**MSN2028**
1.9 TDI	AFN, AVG	81	02/1996 → 06/2000		1,7	12	063521101060	**MSN2028**
1.9 TDI	AJM	85	03/2000 → 09/2001		1,7	12	063521101060	**MSN2028**
1.9 TDI	AJM	85	03/2000 → 09/2001		1,8	12	063521240200	**MSN2108**
1.9 TDI quattro	AFN, AVG	81	09/1996 → 01/2000		1,7	12	063521101060	**MSN2028**
1.9 TDI quattro	AJM, ATJ	85	03/2000 → 09/2001		1,7	12	063521101060	**MSN2028**
1.9 TDI quattro	AJM, ATJ	85	03/2000 → 09/2001		1,8	12	063521240200	**MSN2108**
A4 Avant (8E5, B6)								
1.6	ALZ	75	09/2001 → 06/2004		1,1	12	063521070730	**MSN2071**
1.6	ALZ	75	07/2004 → 12/2004		1,2	12	063521074270	**MSN2077**
1.8 T	AVJ	110	09/2001 → 06/2002		1,1	12	063521070730	**MSN2071**
1.8 T	BEX	140	11/2002 → 06/2004		1,1	12	063521070730	**MSN2071**
1.8 T	BEX	140	07/2004 → 12/2004		1,2	12	063521074270	**MSN2077**
1.8 T	BFB	120	07/2002 → 06/2004		1,1	12	063521070730	**MSN2071**
1.8 T	BFB	120	07/2004 → 12/2004		1,2	12	063521074270	**MSN2077**
1.8 T quattro	AMB	125	09/2001 → 06/2002		1,1	12	063521070730	**MSN2071**
1.8 T quattro	AVJ	110	09/2001 → 06/2002		1,1	12	063521070730	**MSN2071**
1.8 T quattro	BEX	140	11/2002 → 06/2004		1,1	12	063521070730	**MSN2071**
1.8 T quattro	BEX	140	07/2004 → 12/2004		1,2	12	063521074270	**MSN2077**
1.8 T quattro	BFB	120	07/2002 → 06/2004		1,1	12	063521070730	**MSN2071**
1.8 T quattro	BFB	120	07/2004 → 12/2004		1,2	12	063521074270	**MSN2077**
1.9 TDI	AVB	74	11/2001 → 05/2004		1,7	12	063521101060	**MSN2028**
1.9 TDI	AVB	74	11/2001 → 05/2004		1,8	12	063521101380	**MSN2088**
1.9 TDI	AVF, AWX	96	09/2001 → 12/2004		1,8	12	063521240200	**MSN2108**
1.9 TDI	BKE	85	06/2004 → 12/2004		1,7	12	063521101060	**MSN2028**
1.9 TDI	BKE	85	06/2004 → 12/2004		1,8	12	063521101380	**MSN2088**
1.9 TDI quattro	AVF	96	11/2001 → 12/2004		1,8	12	063521240200	**MSN2108**
2.0	ALT	96	09/2001 → 06/2004		1,1	12	063521070730	**MSN2071**
2.0	ALT	96	07/2004 → 12/2004		1,2	12	063521074270	**MSN2077**
2.0 FSI	AWA	110	07/2002 → 06/2004		1,1	12	063521070730	**MSN2071**
2.0 FSI	AWA	110	07/2004 → 12/2004		1,2	12	063521074270	**MSN2077**
3.0	ASN	162	09/2001 → 12/2004		1,7	12	063521101060	**MSN2028**
3.0	ASN	162	09/2001 → 12/2004		1,8	12	063521101380	**MSN2088**
3.0 quattro	ASN, AVK	162	09/2001 → 12/2004		1,7	12	063521101060	**MSN2028**
3.0 quattro	ASN, AVK	162	09/2001 → 12/2004		1,8	12	063521101380	**MSN2088**
A4 Avant (8ED)								
1.6	ALZ	75	11/2004 → 06/2008		1,2	12	063521074270	**MSN2077**
1.8 T	BFB	120	11/2004 → 06/2008		1,2	12	063521074270	**MSN2077**
1.8 T quattro	BFB	120	11/2004 → 06/2008		1,2	12	063521074270	**MSN2077**
1.9 TDI	BKE, BRB	85	11/2004 →		1,7	12	063521101060	**MSN2028**
1.9 TDI	BKE, BRB	85	11/2004 → 12/2005		1,8	12	063521101380	**MSN2088**
2.0	ALT	96	11/2004 → 06/2008		1,2	12	063521074270	**MSN2077**

		kW			kW	V	LONG	SHORT
AUDI								
A4 Avant (8ED)								
2.0 TFSI	BGB, BWE	147	11/2004 → 06/2008		1,2	12	063521074270	**MSN2077**
2.0 TFSI	BUL	162	06/2005 → 06/2008		1,2	12	063521074270	**MSN2077**
2.0 TFSI quattro	BGB, BWE	147	11/2004 → 06/2008		1,2	12	063521074270	**MSN2077**
2.0 TFSI quattro	BUL	162	06/2005 → 06/2008		1,2	12	063521074270	**MSN2077**
A4 Cabriolet (8H7, 8HE)								
1.8	AMB	125	10/2002 → 08/2004		1,1	12	063521070730	**MSN2071**
1.8	AMB	125	09/2004 → 10/2005		1,2	12	063521074270	**MSN2077**
1.8 T	BFB	120	07/2002 → 06/2004		1,1	12	063521070730	**MSN2071**
1.8 T	BFB	120	07/2004 → 12/2005		1,2	12	063521074270	**MSN2077**
1.8 T quattro	BFB	120	05/2003 → 06/2004		1,1	12	063521070730	**MSN2071**
1.8 T quattro	BFB	120	07/2004 → 12/2005		1,2	12	063521074270	**MSN2077**
2.0	ALT	96	09/2004 → 12/2005		1,2	12	063521074270	**MSN2077**
2.0		147	01/2006 → 03/2009		1,2	12	063521074270	**MSN2077**
2.0 TFSI 16V	BWE, BWT	147	01/2006 → 03/2009		1,2	12	063521074270	**MSN2077**
3.0	ASN	162	04/2002 → 12/2005		1,8	12	063521101380	**MSN2088**
3.0 quattro	ASN	162	05/2003 → 12/2005		1,7	12	063521101060	**MSN2028**
3.0 quattro	ASN	162	06/2003 → 12/2005		1,8	12	063521101380	**MSN2088**
A6 (4A, C4)								
1.8	ADR	92	12/1995 → 10/1997		1,1	12	063521070680	**MSN2070**
1.8 quattro	ADR	92	12/1995 → 10/1997		1,1	12	063521070680	**MSN2070**
1.9 TDI	1Z, AHU	66	06/1994 → 02/1997		1,7	12	063521101060	**MSN2028**
2.0	AAE	74	06/1994 → 08/1996		1,1	12	063521070680	**MSN2070**
2.0	ABK	85	06/1994 → 08/1996		1,1	12	063521070680	**MSN2070**
2.0 16V	ACE	103	06/1994 → 10/1997		1,1	12	063521070680	**MSN2070**
2.0 16V quattro	ACE	103	06/1994 → 10/1997		1,1	12	063521070680	**MSN2070**
A6 (4B, C5)								
1.8	AFY	85	05/1997 → 05/1998		1,1	12	063521070680	**MSN2070**
1.8	AFY	85	05/1998 → 05/2000		1,1	12	063521070730	**MSN2071**
1.8	AJP, ANQ, AQE, ARH	92	12/1997 → 04/2001		1,1	12	063521070730	**MSN2071**
1.8 T	AEB, ANB, APU, ARK, AWL, AWT	110	04/1997 → 05/1998		1,1	12	063521070680	**MSN2070**
1.8 T	AEB, ANB, APU, ARK, AWL, AWT	110	05/1998 → 04/2001		1,1	12	063521070730	**MSN2071**
1.8 T	AJL	132	12/1997 → 05/1998		1,1	12	063521070680	**MSN2070**
1.8 T	AJL	132	05/1998 → 10/2000		1,1	12	063521070730	**MSN2071**
1.8 T quattro	AEB, ANB, APU, ARK, AWT	110	04/1997 → 05/1998		1,1	12	063521070680	**MSN2070**
1.8 T quattro	AEB, ANB, APU, ARK, AWT	110	05/1998 → 05/2004		1,1	12	063521070730	**MSN2071**
1.8 T quattro	AJL	132	12/1997 → 10/2000		1,1	12	063521070730	**MSN2071**
1.9 TDI	AFN, AVG	81	04/1997 → 08/1999		1,7	12	063521101060	**MSN2028**
1.9 TDI	AFN, AVG	81	04/1997 → 10/2000		1,8	12	063521101380	**MSN2088**
1.9 TDI	AJM	85	07/2000 → 04/2001		1,7	12	063521101060	**MSN2028**
1.9 TDI	AJM	85	07/2000 → 04/2001		1,8	12	063521101380	**MSN2088**

		kW			kW	V	LONG	SHORT
AUDI								
A6 (4B, C5)								
1.9 TDI	AVF, AWX	96	08/2001 → 05/2004		1,7	12	063521101060	**MSN2028**
1.9 TDI	AVF, AWX	96	08/2001 → 11/2003		1,8	12	063521240200	**MSN2108**
2.0	ALT	96	08/2001 → 05/2004		1,1	12	063521070730	**MSN2071**
A6 Avant (4A, C4)								
1.8	ADR	92	12/1995 → 10/1997		1,1	12	063521070680	**MSN2070**
1.8 quattro	ADR	92	07/1996 → 10/1997		1,1	12	063521070680	**MSN2070**
1.9 TDI	1Z, AHU	66	07/1994 → 10/1997		1,7	12	063521101060	**MSN2028**
2.0	ABK	85	06/1994 → 06/1996		1,1	12	063521070680	**MSN2070**
2.0 16V	ACE	103	07/1996 → 10/1997		1,1	12	063521070680	**MSN2070**
2.0 16V quattro	ACE	103	06/1994 → 10/1997		1,1	12	063521070680	**MSN2070**
A6 Avant (4B, C5)								
1.8	AFY	85	02/1998 → 05/1998		1,1	12	063521070680	**MSN2070**
1.8	AFY	85	05/1998 → 05/2000		1,1	12	063521070730	**MSN2071**
1.8	AJP, AQE, ARH	92	02/1998 → 04/2001		1,1	12	063521070730	**MSN2071**
1.8 T	AEB, ANB, APU, ARK, AWT	110	02/1998 → 05/1998		1,1	12	063521070680	**MSN2070**
1.8 T	AEB, ANB, APU, ARK, AWT	110	05/1998 → 04/2001		1,1	12	063521070730	**MSN2071**
1.8 T	AJL	132	04/1999 → 10/2000		1,1	12	063521070730	**MSN2071**
1.8 T quattro	AEB, ANB, APU, ARK, AWT	110	02/1998 → 05/1998		1,1	12	063521070680	**MSN2070**
1.8 T quattro	AEB, ANB, APU, ARK, AWT	110	05/1998 → 01/1999		1,1	12	063521070730	**MSN2071**
1.8 T quattro	AJL	132	02/1998 → 10/2000		1,1	12	063521070730	**MSN2071**
1.9 TDI	AFN	81	02/1998 → 04/2001		1,7	12	063521101060	**MSN2028**
1.9 TDI	AJM	85	07/2000 → 01/2005		1,7	12	063521101060	**MSN2028**
1.9 TDI	AJM	85	07/2000 → 04/2001		1,8	12	063521101380	**MSN2088**
1.9 TDI	AVF, AWX	96	08/2001 → 01/2005		1,7	12	063521101060	**MSN2028**
1.9 TDI	AVF, AWX	96	08/2001 → 11/2003		1,8	12	063521240200	**MSN2108**
2.0	ALT	96	08/2001 → 01/2005		1,1	12	063521070730	**MSN2071**
CABRIOLET (8G7, B4)								
1.8	ADR	92	01/1997 → 03/1999		1,1	12	063521070680	**MSN2070**
1.8	ADR	92	04/1999 → 08/2000		1,1	12	063521070730	**MSN2071**
1.9 TDI	1Z, AHU	66	07/1995 → 08/2000		1,7	12	063521101060	**MSN2028**
2.0 16V	ACE	103	06/1995 → 07/1996		1,1	12	063521070680	**MSN2070**
2.0 E	ABK	85	01/1993 → 07/1998		1,1	12	063521070680	**MSN2070**
COUPE (89, 8B)								
1.8	DZ	82	08/1989 → 07/1991		1,1	12	063521070680	**MSN2070**
2.0	3A	82	03/1990 → 07/1990		1,1	12	063521070680	**MSN2070**
2.0	3A	83	05/1989 → 03/1990		1,1	12	063521070680	**MSN2070**
2.0	AAD, ABK	85	08/1990 → 12/1995		1,1	12	063521070680	**MSN2070**
2.0 16 V	6A	101	01/1992 → 07/1992		1,1	12	063521070680	**MSN2070**
2.0 16 V	ACE	103	08/1992 → 12/1995		1,1	12	063521070680	**MSN2070**

		kW		i	kW	V	LONG	SHORT
AUDI								
TT (8J3)								
1.8 TFSI	CDAA	118	06/2008 →		1,1	12	063521214080	**MSN2102**
2.0 quattro	CDLA, CDMA	195	05/2008 →		1,1	12	063521214020	**MSN2101**
2.0 quattro	CDLA, CDMA	195	05/2008 →		1,0	12	063521214120	**MSN2103**
2.0 TDI quattro	CBBB, CFGB	125	05/2010 →		1,1	12	063521214020	**MSN2101**
2.0 TDI quattro	CBBB, CFGB	125	06/2008 →		1,7	12	063521230140	**MSN2105**
2.0 TFSI	BPY, BWA, CCTA, CCZA	147	10/2006 →		1,1	12	063521214020	**MSN2101**
2.0 TFSI	BPY, BWA, CCTA, CCZA	147	10/2006 → 06/2010		1,0	12	063521214120	**MSN2103**
2.0 TFSI	CESA	155	05/2010 →		1,1	12	063521214020	**MSN2101**
2.0 TFSI quattro	CCZA	147	06/2008 → 06/2010		1,1	12	063521214020	**MSN2101**
2.0 TFSI quattro	CDLB	200	06/2008 →		1,1	12	063521214020	**MSN2101**
2.0 TFSI quattro	CDLB	200	06/2008 →		1,0	12	063521214120	**MSN2103**
2.0 TFSI quattro	CESA, CETA	155	05/2010 →		1,1	12	063521214020	**MSN2101**
3.2 V6 quattro	BUB	184	10/2006 →		1,7	12	063521230160	**MSN2106**
TT (8N3)								
1.8 T	AJQ, APP, ARY, ATC, AUQ, AWP	132	09/2000 → 06/2006		1,1	12	063521210260	**MSN2098**
1.8 T	AJQ, APP, ARY, ATC, AUQ, AWP	132	09/2000 → 06/2006		1,7	12	063521230160	**MSN2106**
1.8 T	AUM	110	09/2002 → 06/2006		1,1	12	063521210260	**MSN2098**
1.8 T	AUM	110	09/2002 → 06/2006		1,7	12	063521230160	**MSN2106**
1.8 T	BVP	120	09/2005 → 06/2006		1,1	12	063521210260	**MSN2098**
1.8 T	BVP	120	09/2005 → 06/2006		1,7	12	063521230160	**MSN2106**
1.8 T	BVR	140	09/2005 → 06/2006		1,1	12	063521210260	**MSN2098**
1.8 T	BVR	140	09/2005 → 06/2006		1,7	12	063521230160	**MSN2106**
1.8 T quattro	AJQ, ARY, ATC, AWP	132	10/1998 → 05/2001		2,0	12	063521250480	**MSN2113**
1.8 T quattro	AMU, APX, BAM	165	03/2000 → 08/2002		1,1	12	063521210260	**MSN2098**
1.8 T quattro	AMU, APX, BAM	165	10/1998 → 05/2001		2,0	12	063521250480	**MSN2113**
1.8 T quattro	BFV	176	03/2005 → 06/2006		1,1	12	063521210260	**MSN2098**
TT Roadster (8J9)								
1.8 TFSI	CDAA	118	06/2008 →		1,1	12	063521214080	**MSN2102**
2.0 quattro	CDLA, CDMA	195	05/2008 →		1,1	12	063521214020	**MSN2101**
2.0 quattro	CDLA, CDMA	195	05/2008 →		1,0	12	063521214120	**MSN2103**
2.0 TDI quattro	CBBB, CFGB	125	05/2010 →		1,1	12	063521214020	**MSN2101**
2.0 TDI quattro	CBBB, CFGB	125	06/2008 →		1,7	12	063521230140	**MSN2105**
2.0 TFSI	BPY, BWA, CCTA, CCZA	147	02/2007 →		1,1	12	063521214020	**MSN2101**
2.0 TFSI	BPY, BWA, CCTA, CCZA	147	02/2007 → 06/2010		1,0	12	063521214120	**MSN2103**
2.0 TFSI	CESA	155	05/2010 →		1,1	12	063521214020	**MSN2101**
2.0 TFSI quattro	CCZA	147	06/2008 → 06/2010		1,1	12	063521214020	**MSN2101**
2.0 TFSI quattro	CDLB	200	06/2008 →		1,1	12	063521214020	**MSN2101**
2.0 TFSI quattro	CDLB	200	06/2008 →		1,0	12	063521214120	**MSN2103**
2.0 TFSI quattro	CESA, CETA	155	05/2010 →		1,1	12	063521214020	**MSN2101**
3.2 V6 quattro	BUB	184	02/2007 →		1,7	12	063521230160	**MSN2106**
TT Roadster (8N9)								
1.8 T	AJQ, APP, ATC, AUQ, AWP	132	08/2000 → 06/2006		1,1	12	063521210260	**MSN2098**

		kW			kW	V	LONG	SHORT
AUDI								
TT Roadster (8N9)								
1.8 T	AJQ, APP, ATC, AUQ, AWP	132	08/2000 → 06/2006		1,7	12	063521230160	**MSN2106**
1.8 T	AUM	110	01/2001 → 06/2006		1,1	12	063521210260	**MSN2098**
1.8 T	AUM	110	01/2001 → 06/2006		1,7	12	063521230160	**MSN2106**
1.8 T	BVP	120	09/2005 → 06/2006		1,1	12	063521210260	**MSN2098**
1.8 T	BVP	120	09/2005 → 06/2006		1,7	12	063521230160	**MSN2106**
1.8 T	BVR	140	09/2005 → 06/2006		1,1	12	063521210260	**MSN2098**
1.8 T	BVR	140	09/2005 → 06/2006		1,7	12	063521230160	**MSN2106**
1.8 T quattro	AJQ, ARY, ATC, AWP	132	02/2000 → 08/2002		1,1	12	063521210260	**MSN2098**
1.8 T quattro	AJQ, ARY, ATC, AWP	132	02/2000 → 08/2002		1,7	12	063521230160	**MSN2106**
1.8 T quattro	AJQ, ARY, ATC, AWP	132	02/2000 → 05/2001		2,0	12	063521250480	**MSN2113**
1.8 T quattro	AMU, APX, BAM	165	03/2000 → 08/2002		1,1	12	063521210260	**MSN2098**
1.8 T quattro	AMU, APX, BAM	165	10/1999 → 05/2001		2,0	12	063521250480	**MSN2113**
FAW-AUDI								
A6 Tre volumi (C5)								
1.8	ADR, ANQ	92	09/1999 → 09/2002	Chinese Market	1,1	12	063521070680	**MSN2070**
1.8	ADR, ANQ	92	09/1999 → 09/2002	Chinese Market	1,1	12	063521070730	**MSN2071**
AUTOBIANCHI								
A 112								
0.9	A112A 5.000	32	10/1969 → 12/1972		0,8	12	063222908010	**MSN290**
0.9	A112A 5.000	33	01/1976 → 12/1978		0,8	12	063222908010	**MSN290**
0.9 E	A112A 5.000	34	01/1973 → 12/1977		0,8	12	063222908010	**MSN290**
0.9 Junior	A112A 5.000, A112B2.000	31	07/1975 → 12/1985		0,8	12	063222908010	**MSN290**
1.0 Abarth	A112A1.000	43	09/1971 → 12/1975		0,8	12	063222908010	**MSN290**
1.0 Abarth	A112A2.000	51	01/1974 → 12/1984		0,8	12	063222908010	**MSN290**
1.0 E,Elite,LX	A112B1.000	35	11/1977 → 12/1985		0,8	12	063222908010	**MSN290**
Y10								
1.0	156A.000	41	03/1985 → 12/1988		0,8	12	063101023010	**MSN410**
1.0	156A2.000	33	03/1985 → 12/1988		0,8	12	063101023010	**MSN410**
1.0 4WD	156A3.000	37	12/1986 → 12/1988		0,8	12	063101023010	**MSN410**
1.0 Cat.	156A2.246	33	01/1989 → 09/1992		0,8	12	063101023010	**MSN410**
1.0 Turbo	156A1.000	63	03/1985 → 12/1988		0,8	12	063101023010	**MSN410**
1.1	156C.000	42	06/1989 → 09/1992		0,8	12	063101023010	**MSN410**
1.1 4WD	156C.000	42	06/1989 → 09/1992		0,8	12	063101023010	**MSN410**
1.1 i.e. Cat.	156C.046	42	09/1990 → 09/1992		0,8	12	063101023010	**MSN410**
1.3 i.e. GT	146A5.046	54	06/1989 → 06/1989		0,8	12	063101023010	**MSN410**
1.3 i.e. GT	156B.000	57	06/1989 → 09/1992		0,8	12	063101023010	**MSN410**
BMW								
02 (E10)								
1802	M10 B18	66	05/1971 → 07/1975		1,7	12	063521101060	**MSN2028**

		kW		i	kW	V	LONG	SHORT
BMW								
3 (E30)								
316 i	M10 B18	75	08/1987 → 08/1988		1,4	12	063521074420	**MSN2019**
316 i	M40 B16	75	07/1988 → 06/1991		1,4	12	063521074420	**MSN2019**
316 i	M40 B16 (Kat.)	73	09/1988 → 06/1991		1,4	12	063521074420	**MSN2019**
318 i	M40 B18	85	09/1987 → 06/1991		1,4	12	063521074420	**MSN2019**
318 i	M40 B18	83	09/1987 → 06/1991		1,4	12	063521074420	**MSN2019**
318 is	M42 B18	100	09/1989 → 08/1991		1,4	12	063521074420	**MSN2019**
3 (E36)								
316 i	M40 B16 (Kat.)	73	12/1990 → 09/1993		1,4	12	063521074420	**MSN2019**
316 i	M40 B16, M43 B16	75	12/1990 → 09/1993		1,4	12	063521074420	**MSN2019**
316 i	M43 B16	75	09/1993 → 02/1998		1,4	12	063521074420	**MSN2019**
318 i	M40 B18	83	12/1990 → 10/1993		1,4	12	063521074420	**MSN2019**
318 i	M43 B18	85	10/1993 → 02/1998		1,4	12	063521074420	**MSN2019**
318 is	M42 B18	103	09/1993 → 12/1996		1,4	12	063521074420	**MSN2019**
318 is	M44 B19	103	09/1995 → 02/1998		1,4	12	063521074420	**MSN2019**
320 i	M50 B(20 6 S1), M50 B(20 6 S2) Vanos, M50 B20, M50 B20 TU, M52 B(20 6 S3) Vanos, M52 B20	110	09/1990 → 02/1998		1,4	12	063521074420	**MSN2019**
323 i 2.5	M52 B25 (Vanos)	125	03/1995 → 02/1998		1,4	12	063521074420	**MSN2019**
325 i	M50 B25, M50 B25 (Vanos), M50 B25 TU	141	09/1990 → 09/1995		1,4	12	063521074420	**MSN2019**
328 i	M52 B28, M52 B28 TU	142	01/1995 → 02/1998		1,4	12	063521074420	**MSN2019**
3 (E46)								
316 i	M43 164 E3, M43 B19 TU	77	09/1998 → 09/2002		1,4	12	063521074420	**MSN2019**
316 i	M43 B16, M43 B16 (16 4 E3)	77	04/2000 → 02/2005		1,4	12	063521074420	**MSN2019**
318 d	M47 204 D1, M47 D20	85	09/2001 → 03/2003		1,8	12	063193001010	**MSN808**
318 i	M43 B19, M43 B19 TU	87	04/1998 → 09/2001		1,4	12	063521074420	**MSN2019**
320 d	M47 204 D1, M47 D20	100	04/1998 → 09/2001		1,8	12	063193001010	**MSN808**
320 i	M52 B(20 6 S3) Vanos, M52 B20	110	04/1998 → 09/2000		1,4	12	063521074420	**MSN2019**
320 i	M54 226 S1, M54 B22	125	09/2000 → 02/2005		1,4	12	063521074420	**MSN2019**
323 i	M52 B25 (Vanos), M52 B25 TU	125	04/1998 → 09/2000		1,4	12	063521074420	**MSN2019**
325 i	M54 256 S5, M54 B25	141	09/2000 → 02/2005		1,4	12	063521074420	**MSN2019**
325 xi	M54 256 S5	141	09/2000 → 02/2005		1,4	12	063521074420	**MSN2019**
328 i	M52 B28	142	04/1998 → 06/2000		1,4	12	063521074420	**MSN2019**
330 d	M57N 306 D2	150	03/2003 → 02/2005		2,2	12	063280071010	**MSN8071**
330 i	M54 306 S3, M54 B30	170	06/2000 → 02/2005		1,4	12	063521074420	**MSN2019**
330 xd	M57N 306 D2	150	03/2003 → 02/2005		2,2	12	063280071010	**MSN8071**
330 xi	M54 306 S3	170	07/2000 → 02/2005		1,4	12	063521074420	**MSN2019**
3 Cabriolet (E30)								
318 i	M40 B18	83	09/1990 → 10/1993		1,4	12	063521074420	**MSN2019**

		kW			kW	V	LONG	SHORT
BMW								
3 Cabriolet (E36)								
318 i	M43 B18	85	01/1994 → 04/1999		1,4	12	063521074420	**MSN2019**
320 i	M50 B(20 6 S2) Vanos, M50 B20, M50 B20 TU, M52 B(20 6 S3) Vanos, M52 B20	110	12/1993 → 04/1999		1,4	12	063521074420	**MSN2019**
323 i 2.5	M52 B25 (Vanos)	125	10/1995 → 04/1999		1,4	12	063521074420	**MSN2019**
325 i	M50 B25, M50 B25 TU	141	03/1993 → 03/1995		1,4	12	063521074420	**MSN2019**
328 i	M52 B28, M52 B28 TU	142	03/1995 → 04/1999		1,4	12	063521074420	**MSN2019**
3 Cabriolet (E46)								
320 Ci	M54 226 S1, M54 B22	125	09/2000 → 08/2006		1,4	12	063521074420	**MSN2019**
323 Ci	M52 B25 (Vanos)	125	04/2000 → 09/2000		1,4	12	063521074420	**MSN2019**
325 Ci	M54 256 S5	141	09/2000 → 08/2006		1,4	12	063521074420	**MSN2019**
330 Cd	M57N 306 D2	150	08/2005 → 08/2006		2,2	12	063280071010	**MSN8071**
330 Ci	M54 306 S3	170	06/2000 → 08/2006		1,4	12	063521074420	**MSN2019**
3 Compact (E36)								
316 g		75	12/1995 → 08/2000		1,4	12	063521074420	**MSN2019**
316 i	M43 164 E3, M43 B19 TU	77	01/1999 → 08/2000		1,4	12	063521074420	**MSN2019**
316 i	M43 B16	75	03/1994 → 08/2000		1,4	12	063521074420	**MSN2019**
318 ti	M42 B18	103	11/1994 → 08/1995		1,4	12	063521074420	**MSN2019**
318 ti	M44 B19	103	07/1995 → 08/2000		1,4	12	063521074420	**MSN2019**
323 ti	M52 B25 (Vanos)	125	08/1997 → 08/2000		1,4	12	063521074420	**MSN2019**
3 Compact (E46)								
318 td	M47N 204 D4	85	03/2003 → 02/2005		1,8	12	063193001010	**MSN808**
320 td	M47N 204 D4	110	09/2001 → 02/2005		1,8	12	063193001010	**MSN808**
325 ti	M54 256 S5, M54 B25	141	06/2001 → 02/2005		1,4	12	063521074420	**MSN2019**
3 Coupe (E36)								
316 i	M43 B16	75	09/1993 → 04/1999		1,4	12	063521074420	**MSN2019**
318 is	M42 B18	103	03/1992 → 10/1995		1,4	12	063521074420	**MSN2019**
318 is	M44 B19	103	09/1995 → 04/1999		1,4	12	063521074420	**MSN2019**
320 i	M50 B(20 6 S1), M50 B(20 6 S2) Vanos, M50 B20, M50 B20 TU, M52 B(20 6 S3) Vanos, M52 B20	110	03/1992 → 12/1998		1,4	12	063521074420	**MSN2019**
323 i 2.5	M52 B25 (Vanos)	125	06/1995 → 04/1999		1,4	12	063521074420	**MSN2019**
325 i	M50 B25, M50 B25 (Vanos), M50 B25 TU	141	03/1992 → 12/1995		1,4	12	063521074420	**MSN2019**
328 i	M52 B28, M52 B28 TU	142	03/1995 → 04/1999		1,4	12	063521074420	**MSN2019**
3 Coupe (E46)								
316 Ci	M43 B16 (16 4 E3)	77	04/2000 →		1,4	12	063521074420	**MSN2019**
318 Ci	M43 B19	87	11/1999 → 09/2001		1,4	12	063521074420	**MSN2019**
320 Ci	M52 B(20 6 S4), M52 B20	110	08/1999 → 09/2000		1,4	12	063521074420	**MSN2019**
320 Ci	M54 226 S1, M54 B22	125	09/2000 →		1,4	12	063521074420	**MSN2019**
323 Ci	M52 B25 (Vanos)	125	04/1999 → 09/2000		1,4	12	063521074420	**MSN2019**
325 Ci	M54 256 S5	141	09/2000 →		1,4	12	063521074420	**MSN2019**
328 Ci	M52 B28	142	04/1999 → 06/2000		1,4	12	063521074420	**MSN2019**

		kW		i	kW	V	LONG	SHORT
BMW								
3 Coupe (E46)								
330 Cd	M57N 306 D2	150	03/2003 → 05/2006		2,2	12	063280071010	**MSN8071**
330 Ci	M54 306 S3	170	06/2000 → 05/2006		1,4	12	063521074420	**MSN2019**
330 xi	M54 306 S3	170	06/2000 →		1,4	12	063521074420	**MSN2019**
3 Touring (E30)								
316 i	M40 B16	75	09/1991 → 06/1994		1,4	12	063521074420	**MSN2019**
316 i	M40 B16 (Kat.)	73	09/1991 → 06/1994		1,4	12	063521074420	**MSN2019**
318 i	M40 B18	83	04/1989 → 06/1994		1,4	12	063521074420	**MSN2019**
318 i	M40 B18	85	04/1989 → 06/1991		1,4	12	063521074420	**MSN2019**
3 Touring (E36)								
316 i	M43 B16	75	01/1996 → 10/1999		1,4	12	063521074420	**MSN2019**
318 i	M43 B18	85	07/1995 → 10/1999		1,4	12	063521074420	**MSN2019**
320 i	M50 B20, M50 B20 TU, M52 B(20 6 S3) Vanos, M52 B20	110	03/1995 → 10/1999		1,4	12	063521074420	**MSN2019**
323 i 2.5	M52 B25 (Vanos)	125	12/1995 → 10/1999		1,4	12	063521074420	**MSN2019**
328 i	M52 B28, M52 B28 TU	142	01/1995 → 02/1998		1,4	12	063521074420	**MSN2019**
3 Touring (E46)								
318 d	M47 204 D1, M47 D20	85	03/2002 → 02/2005		1,8	12	063193001010	**MSN808**
318 d	M47N 204 D4	85	03/2003 → 02/2005		1,8	12	063193001010	**MSN808**
318 i	M43 B19, M43 B19 TU	87	10/1999 → 09/2001		1,4	12	063521074420	**MSN2019**
320 d	M47 204 D1, M47 D20	100	03/2000 → 09/2001		1,8	12	063193001010	**MSN808**
320 i	M52 B(20 6 S3) Vanos, M52 B20	110	10/1999 → 09/2000		1,4	12	063521074420	**MSN2019**
320 i	M54 226 S1, M54 B22	125	09/2000 → 02/2005		1,4	12	063521074420	**MSN2019**
325 i	M54 256 S5, M54 B25	141	09/2000 → 02/2005		1,4	12	063521074420	**MSN2019**
325 xi	M54 256 S5	141	09/2000 → 02/2005		1,4	12	063521074420	**MSN2019**
328 i	M52 B28	142	10/1999 → 06/2000		1,4	12	063521074420	**MSN2019**
330 d	M57N 306 D2	150	03/2003 → 02/2005		2,2	12	063280071010	**MSN8071**
330 i	M54 306 S3, M54 B30	170	06/2000 → 02/2005		1,4	12	063521074420	**MSN2019**
330 xd	M57N 306 D2	150	03/2003 → 02/2005		2,2	12	063280071010	**MSN8071**
330 xi	M54 306 S3	170	07/2000 → 02/2005		1,4	12	063521074420	**MSN2019**
5 (E34)								
518 i	M40 B18	83	08/1989 → 09/1995		1,4	12	063521074420	**MSN2019**
518 i	M43 B18	85	08/1989 → 09/1995		1,4	12	063521074420	**MSN2019**
520 i 24V	M50 B(20 6 S1), M50 B(20 6 S2) Vanos, M50 B20, M50 B20 TU	110	09/1989 → 09/1995		1,4	12	063521074420	**MSN2019**
525 i 24V	M50 B25, M50 B25 TU, M52 B25 (Vanos)	141	09/1989 → 09/1995		1,4	12	063521074420	**MSN2019**
525 i X 24V	M52 B25 (Vanos)	141	10/1991 → 09/1995		1,4	12	063521074420	**MSN2019**
5 (E39)								
520 d	M47 204 D1, M47 D20	100	02/2000 → 06/2003		1,8	12	063193001010	**MSN808**
520 i	M52 B(20 6 S3) Vanos	100	04/1999 → 06/2003		1,4	12	063521074420	**MSN2019**
520 i	M52 B(20 6 S3) Vanos, M52 B(20 6 S4), M52 B20	110	01/1996 → 09/2000		1,4	12	063521074420	**MSN2019**

		kW		i	kW	V	LONG	SHORT
BMW								
5 (E39)								
520 i	M54 B22	125	09/2000 → 06/2003		1,4	12	063521074420	**MSN2019**
523 i	M52 B25 (Vanos), M52 B25 TU	125	11/1995 → 09/2000		1,4	12	063521074420	**MSN2019**
525 i	M54 256 S5, M54 B25	141	09/2000 → 06/2003		1,4	12	063521074420	**MSN2019**
528 i	M52 B28, M52 B28 TU	142	11/1995 → 09/2000		1,4	12	063521074420	**MSN2019**
530 i	M54 306 S3, M54 B30	170	09/2000 → 06/2003		1,4	12	063521074420	**MSN2019**
5 (E60)								
520i	M54 226 S1, M54 B22	125	07/2003 → 03/2005		1,4	12	063521074420	**MSN2019**
525d	M57 256 D1	120	12/2004 → 03/2007		2,2	12	063280071010	**MSN8071**
525d	M57 D25 TU, M57N 256 D4	130	06/2004 → 03/2007		2,2	12	063280071010	**MSN8071**
525i	M54 256 S5, M54 B25	141	09/2003 → 03/2005		1,4	12	063521074420	**MSN2019**
530d	N57 306 D2	160	07/2003 → 09/2005		2,2	12	063280071010	**MSN8071**
530i	M54 306 S3, M54 B30	170	07/2003 → 03/2005		1,4	12	063521074420	**MSN2019**
535d	M57 306 D4	200	09/2004 → 03/2007		2,2	12	063280071010	**MSN8071**
5 Touring (E34)								
518 g	M43 B18	85	11/1995 → 06/1996		1,4	12	063521074420	**MSN2019**
518 i	M40 B18	83	03/1993 → 09/1994		1,4	12	063521074420	**MSN2019**
518 i	M43 B18	85	09/1994 → 01/1997		1,4	12	063521074420	**MSN2019**
520 i	M50 B(20 6 S1), M50 B(20 6 S2) Vanos, M50 B20, M50 B20 TU	110	11/1991 → 12/1996		1,4	12	063521074420	**MSN2019**
525 i	M50 B25, M50 B25 TU	141	11/1991 → 12/1996		1,4	12	063521074420	**MSN2019**
525 i X	M50 B25, M52 B25 (Vanos)	141	02/1992 → 12/1996		1,4	12	063521074420	**MSN2019**
5 Touring (E39)								
520 d	M47 204 D1, M47 D20	100	02/2000 → 09/2003		1,8	12	063193001010	**MSN808**
520 d		110	06/2002		1,4	12	063521074420	**MSN2019**
520 i	M52 B(20 6 S3) Vanos	100	04/1999 → 12/2001		1,4	12	063521074420	**MSN2019**
520 i	M52 B(20 6 S3) Vanos, M52 B(20 6 S4), M52 B20	110	01/1997 → 09/2000		1,4	12	063521074420	**MSN2019**
520 i	M54 B22	125	09/2000 → 05/2004		1,4	12	063521074420	**MSN2019**
523 i	M52 B25 (Vanos), M52 B25 TU	125	01/1997 → 09/2000		1,4	12	063521074420	**MSN2019**
525 i	M54 256 S5, M54 B25	141	09/2000 → 05/2004		1,4	12	063521074420	**MSN2019**
528 i	M52 B28, M52 B28 TU	142	01/1997 → 09/2000		1,4	12	063521074420	**MSN2019**
530 i	M54 306 S3, M54 B30	170	09/2000 → 05/2004		1,4	12	063521074420	**MSN2019**
5 Touring (E61)								
525d	M57 D25 TU, M57N 256 D4	130	06/2004 → 03/2007		2,2	12	063280071010	**MSN8071**
525d	M57N 256 D4	120	12/2004 → 03/2007		2,2	12	063280071010	**MSN8071**
525i	M54 256 S5, M54 B25	141	06/2004 → 03/2005		1,4	12	063521074420	**MSN2019**
530d	N57 306 D2	160	06/2004 → 09/2005		2,2	12	063280071010	**MSN8071**
535d	M57 306 D4	200	09/2004 → 03/2007		2,2	12	063280071010	**MSN8071**

		kW			kW	V	LONG	SHORT
BMW								
7 (E38)								
728 i,iL	M52 B28, M52 B28 TU	142	08/1995 → 11/2001		1,4	12	063521074420	**MSN2019**
728i X		142	11/1995 → 09/2001		1,4	12	063521074420	**MSN2019**
7 (E65, E66)								
730 d	M57N2 306 D2	160	10/2002 →		2,2	12	063280071010	**MSN8071**
730 d		155	10/2002 → 03/2005		2,2	12	063280071010	**MSN8071**
730 i,Li	M54 306 S3, M54 B30	170	03/2003 → 03/2005		1,4	12	063521074420	**MSN2019**
X3 (E83)								
2.5 i	M54 256 S5, M54 B25	141	03/2004 → 08/2006		1,4	12	063521074420	**MSN2019**
3.0 d	M54N 306 D2	150	01/2004 → 09/2005		2,2	12	063280071010	**MSN8071**
3.0 i	M54 306 S3, M54 B30	170	01/2004 → 08/2006		1,4	12	063521074420	**MSN2019**
X5 (E53)								
3.0 d	M57N 306 D4	160	12/2003 → 10/2006		2,2	12	063280071010	**MSN8071**
3.0 d		155	08/2004 → 10/2006		2,2	12	063280071010	**MSN8071**
Z3 (E36)								
1.8	M43 B18	85	10/1995 → 10/1998		1,4	12	063521074420	**MSN2019**
1.9	M43 194 E1	85	01/1999 → 09/2002		1,4	12	063521074420	**MSN2019**
1.9	M43 194 E1, M43 B19, M43 B19 TU	87	09/1998 → 01/2003		1,4	12	063521074420	**MSN2019**
1.9	M44 B19	103	10/1995 → 03/1999		1,4	12	063521074420	**MSN2019**
2.0	M52 B(20 6 S4), M52 B20	110	04/1999 → 12/2000		1,4	12	063521074420	**MSN2019**
2.2	M54 226 S1, M54 B22	125	09/2000 → 09/2002		1,4	12	063521074420	**MSN2019**
2.8	M52 B28, M52 B28 TU	141	04/1997 → 06/2000		1,4	12	063521074420	**MSN2019**
3.0	M54 306 S3, M54 B30	170	06/2000 → 01/2003		1,4	12	063521074420	**MSN2019**
Z3 Coupe (E36)								
2.8	M52 B28	141	09/1997 → 06/2000		1,4	12	063521074420	**MSN2019**
3.0	M54 306 S3	170	06/2000 → 06/2003		1,4	12	063521074420	**MSN2019**
Z4 (E85)								
2.2 i	M54 226 S1, M54 B22	125	10/2003 → 11/2005		1,4	12	063521074420	**MSN2019**
2.5 i	M54 256 S5, M54 B25	141	02/2003 →		1,4	12	063521074420	**MSN2019**
3.0 i	M54 306 S3, M54 B30	170	02/2003 →		1,4	12	063521074420	**MSN2019**
CITROEN								
AX (ZA-_)								
10	C1A	32	04/1991 → 06/1992		1,0	12	063521120410	**MSN2029**
10	CDY (TU9M)	33	07/1992 → 03/1997		1,0	12	063521120410	**MSN2029**
10	CDZ (TU9M)	37	07/1992 → 03/1997		1,0	12	063521120410	**MSN2029**
11	H1A, H1B	40	04/1991 → 05/1992		1,0	12	063521120410	**MSN2029**
11	H1B, HDZ (TU1M)	44	04/1991 → 03/1997		1,0	12	063521120410	**MSN2029**
14	K1G	51	04/1991 → 06/1991		1,0	12	063521120410	**MSN2029**
14	K2A	61	04/1991 → 12/1992		1,0	12	063521120410	**MSN2029**
14	K2A, K2B	62	01/1988 → 12/1992		1,0	12	063521120410	**MSN2029**
14	KDX (TU3M/Z), KDY (TU3FM), KDY (TU3M), KDZ (TU3M/Z)	55	04/1991 → 12/1996		1,0	12	063521120410	**MSN2029**
1.3 Sport	M4A	70	04/1987 → 12/1988		1,0	12	063521120410	**MSN2029**

		kW			kW	V	LONG	SHORT
CITROEN								
AX (ZA-_)								
1.4 GTi	KFY (TU3FJ2)	66	08/1991 → 12/1996		1,0	12	063521120410	**MSN2029**
1.4 GTi	KFZ (TU3FJ2)	69	06/1991 → 12/1996		1,0	12	063521120410	**MSN2029**
1.4 GTi	KFZ (TU3FJ2)	74	06/1991 → 12/1992		1,0	12	063521120410	**MSN2029**
11 4x4	H1A	40	06/1991 → 05/1992		1,0	12	063521120410	**MSN2029**
14 4x4	KDX (TU3M/Z), KDY (TU3FM), KDY (TU3M), KDZ (TU3M/Z)	55	08/1991 → 12/1996		1,0	12	063521120410	**MSN2029**
BERLINGO (MF)								
1.1 i (MFHDZ)	HDZ (TU1M), HFX (TU1JP)	44	07/1996 → 11/2002		1,0	12	063521120410	**MSN2029**
1.4 i (MFKFX)	KFW (TU3JP), KFX (TU3JP)	55	07/1996 → 11/2002		1,0	12	063521120410	**MSN2029**
1.6 16V (MFNFU)	NFU (TU5JP4)	80	10/2000 → 11/2002		1,0	12	063521120410	**MSN2029**
1.8 i (MFLFX)	LFX (XU7JB)	66	05/1997 → 11/2002		1,1	12	063521070630	**MSN2015**
1.8 i (MFLFX)	LFX (XU7JB)	66	05/1997 → 11/2002		1,4	12	063521081760	**MSN2079**
1.8 i 4WD (MFLFX)	LFX (XU7JB)	66	04/1997 → 11/2002		1,1	12	063521070630	**MSN2015**
1.8 i 4WD (MFLFX)	LFX (XU7JB)	66	04/1997 → 11/2002		1,4	12	063521081760	**MSN2079**
1.9 D (MFWJZ)	WJY (DW8B), WJZ (DW8)	51	07/1998 → 04/2008		1,4	12	063521084000	**MSN2083**
1.9 D 4WD (MFWJZ)	WJZ (DW8)	51	07/1998 → 11/2002		1,4	12	063521084000	**MSN2083**
2.0 HDi	DW10TD	66	11/2002 → 10/2005		1,4	12	063521084000	**MSN2083**
2.0 HDi 4x4	DW10TD	66	11/2002 → 10/2005		1,4	12	063521084000	**MSN2083**
2.0 HDI 90 (MFRHY)	RHY (DW10TD)	66	12/1999 → 04/2008		1,4	12	063521084000	**MSN2083**
BERLINGO Furgonato (M_)								
1.1 i (MAHDZ, MBHDZ)	HDZ (TU1M)	44	07/1996 → 11/2002		1,0	12	063521120410	**MSN2029**
1.4 i (MBKFX)	KFW (TU3JP), KFX (TU3JP)	55	07/1996 → 11/2002		1,0	12	063521120410	**MSN2029**
1.6 16V	NFU (TU5JP4)	80	10/2000 → 11/2002		1,0	12	063521120410	**MSN2029**
1.8 i	LFX (XU7JB)	66	08/1999 → 10/2002		1,1	12	063521070630	**MSN2015**
1.8 i	LFX (XU7JB)	66	08/1999 → 10/2002		1,4	12	063521081760	**MSN2079**
1.9 D 70 (MBWJZ, MCWJZ)	WJZ (DW8)	51	04/1999 → 11/2002		1,4	12	063521084000	**MSN2083**
1.9 D 70 4WD	WJZ (DW8)	51	07/1998 → 11/2002		1,4	12	063521084000	**MSN2083**
2.0 HDI 90 (MBRHY, MCRHY)	RHY (DW10TD)	66	12/1999 → 04/2008		1,4	12	063521084000	**MSN2083**
2.0 HDI 90 4WD	RHY (DW10TD)	66	11/2000 → 04/2008		1,4	12	063521084000	**MSN2083**
BX (XB-_)								
16 E	BDY (XU5M), BDZ (XU5M)	65	05/1989 → 02/1993		1,1	12	063521070630	**MSN2015**
BX Break (XB-_)								
16	BDY (XU5M), BDZ (XU5M)	65	05/1989 → 12/1994		1,1	12	063521070630	**MSN2015**
C15 (VD-_)								
1.9 D		44	12/2000 → 12/2005		1,4	12	063521084000	**MSN2083**
C2 (JM_)								
1.1	HFX (TU1JP)	44	09/2003 →		1,0	12	063521120410	**MSN2029**

		kW		i	kW	V	LONG	SHORT
CITROEN								
C2 (JM_)								
1.4	KFV (TU3JP)	54	09/2003 →		1,0	12	063521120410	**MSN2029**
1.6	NFU (TU5JP4)	80	09/2003 →		1,0	12	063521120410	**MSN2029**
C3 (FC_)								
1.1 i	HFX (TU1JP)	44	02/2002 → 08/2005		1,0	12	063521120410	**MSN2029**
1.4 16V	KFU (ET3J4)	65	09/2005 → 09/2009		1,0	12	063521120410	**MSN2029**
1.4 i	KFV (TU3JP)	54	02/2002 → 08/2005		1,0	12	063521120410	**MSN2029**
1.4 i Bivalent	KFV (TU3JP)	54	02/2002 → 08/2005		1,0	12	063521120410	**MSN2029**
1.6 16V	NFU (TU5JP4)	80	02/2002 → 08/2005		1,0	12	063521120410	**MSN2029**
C3 Pluriel (HB_)								
1.4	KFV (TU3JP)	54	05/2003 →		1,0	12	063521120410	**MSN2029**
1.4 Hybrid	KFV (TU3JP)	54	05/2005 →		1,0	12	063521120410	**MSN2029**
1.6	NFU (TU5JP4)	80	05/2003 →		1,0	12	063521120410	**MSN2029**
C4 (LC_)								
1.6 16V Bio-Flex	NFU (TU5JP4)	80	09/2007 → 07/2008		1,0	12	063521120410	**MSN2029**
2.0 16V	EW10A, RFJ (EW10A)	103	11/2004 → 07/2008		1,4	12	063521084000	**MSN2083**
2.0 16V	RFN (EW10J4)	100	11/2004 → 10/2005		1,4	12	063521084000	**MSN2083**
2.0 HDi	DW10BTED4, RHR (DW10BTED4)	100	11/2004 →		2,0	12	063280090010	**MSN8090**
2.0 HDi		103	07/2008 →		2,0	12	063280090010	**MSN8090**
C4 Coupe (LA_)								
2.0 16V	EW10J4S, RFK (EW10J4S)	130	11/2004 → 03/2008		1,4	12	063521084000	**MSN2083**
2.0 16V	RFN (EW10J4)	100	11/2004 → 10/2005		1,4	12	063521084000	**MSN2083**
2.0 HDi	DW10BTED4, RHR (DW10BTED4)	100	11/2004 →		2,0	12	063280090010	**MSN8090**
2.0 HDi		103	07/2008 →		2,0	12	063280090010	**MSN8090**
C4 Grand Picasso (UA_)								
1.8 i 16V	6FY-EW7A	92	10/2006 → 07/2008		1,4	12	063521084000	**MSN2083**
2.0 HDi	RHJ-DW10BTED4, RHR (DW10BTED4)	100	10/2006 →		2,0	12	063280090010	**MSN8090**
2.0 HDi 150		110	07/2009 →		2,0	12	063280090010	**MSN8090**
2.0 i 16V	RFJ (EW10A)	103	10/2006 → 10/2008		1,4	12	063521084000	**MSN2083**
C4 Picasso (UD_)								
1.8 i 16V	6FY-EW7A	92	02/2007 → 07/2008		1,4	12	063521084000	**MSN2083**
2.0 HDi	RHJ-DW10BTED4, RHR (DW10BTED4)	100	02/2007 →		2,0	12	063280090010	**MSN8090**
2.0 HDi 150		110	07/2009 →		2,0	12	063280090010	**MSN8090**
2.0 i 16V	RFJ (EW10A)	103	02/2007 → 10/2008		1,4	12	063521084000	**MSN2083**
C4 Tre volumi								
2.0 16V	EW10A	103	07/2006 → 07/2008		1,4	12	063521084000	**MSN2083**
C5 (DC_)								
1.8 16V (DC6FZB, DC6FZE)	6FZ (EW7J4)	85	03/2001 → 08/2004		1,4	12	063521084000	**MSN2083**
2.0 16V (DCRFNC, DCRFNF)	RFN (EW10J4)	100	03/2001 → 08/2004		1,4	12	063521084000	**MSN2083**

		kW		i	kW	V	LONG	SHORT
CITROEN								
C5 (DC_)								
2.0 16V HPi (DCRLZB)	RLZ (EW10D)	103	03/2001 → 08/2004		1,4	12	063521084000	**MSN2083**
2.0 HDi	RHS (DW10ATED), RHZ (DW10ATED)	79	03/2001 → 08/2004		2,0	12	063280090010	**MSN8090**
2.0 HDi (DCRHYB)	RHY (DW10TD)	66	03/2001 → 08/2004		2,0	12	063280090010	**MSN8090**
2.0 HDi (DCRHZB, DCRHZE)	RHZ (DW10ATED)	80	03/2001 → 08/2004		2,0	12	063280090010	**MSN8090**
2.2 HDi (DC4HXB, DC4HXE)	4HX (DW12TED4/FAP)	98	03/2001 → 08/2004		2,0	12	063280090010	**MSN8090**
C5 (RC_)								
1.8 16V	6FY-EW7A	92	09/2005 → 03/2008		1,4	12	063521084000	**MSN2083**
1.8 16V (RC6FZB)	6FZ (EW7J4)	85	10/2004 → 09/2005		1,4	12	063521084000	**MSN2083**
2.0 16V (RCRFJB, RCRFJC)	EW10A, RFJ (EW10A)	103	10/2004 → 03/2008		1,4	12	063521084000	**MSN2083**
2.0 HDi (RCRHRH)	DW10BTED4	100	09/2004 →		2,0	12	063280090010	**MSN8090**
2.2 HDi	4HT (DW12BTED4)	125	04/2006 →		2,0	12	063280090010	**MSN8090**
2.2 HDi (RC4HXE)	4HX (DW12TED4/FAP)	98	09/2004 →		2,0	12	063280090010	**MSN8090**
C5 (RD_)								
1.8 16V	6FY-EW7A	92	04/2008 →		1,4	12	063521084000	**MSN2083**
2.0 16V	EW10A, RFJ (EW10A)	103	04/2008 → 01/2010		1,4	12	063521084000	**MSN2083**
2.0 16V BioFlex	RFJ (EW10A)	103	04/2008 → 01/2010		1,4	12	063521084000	**MSN2083**
2.0 HDi	DW10BTED4	100	02/2008 →		2,0	12	063280090010	**MSN8090**
2.0 HDi 140		103	04/2009 →		2,0	12	063280090010	**MSN8090**
2.0 HDi 165	RHH (DW10CTED4)	120	04/2009 →		2,0	12	063280090010	**MSN8090**
C5 Break (DE_)								
1.8 16V (DE6FZB, DE6FZE)	6FZ (EW7J4)	85	06/2001 → 08/2004		1,4	12	063521084000	**MSN2083**
2.0 16V (DERFNF, DERFNC, RERFNC)	RFN (EW10J4)	100	06/2001 → 08/2004		1,4	12	063521084000	**MSN2083**
2.0 16V HPi (DERLZB)	RLZ (EW10D)	103	06/2001 → 08/2004		1,4	12	063521084000	**MSN2083**
2.0 HDi	RHZ (DW10ATED)	80	06/2001 → 08/2004		2,0	12	063280090010	**MSN8090**
2.0 HDi (DERHSB, DERHSE)	RHS (DW10ATED), RHZ (DW10ATED)	79	06/2001 → 08/2004		2,0	12	063280090010	**MSN8090**
2.0 HDi (DERHYB)	RHY (DW10TD)	66	06/2001 → 08/2004		2,0	12	063280090010	**MSN8090**
2.2 HDi (DE4HXB, DE4HXE)	4HX (DW12TED4/FAP)	98	06/2001 → 08/2004		2,0	12	063280090010	**MSN8090**
C5 Break (RE_)								
1.8 16V	6FY-EW7A	92	09/2005 → 03/2008		1,4	12	063521084000	**MSN2083**
1.8 16V (RE6FZB)	6FZ (EW7J4)	85	10/2004 → 08/2005		1,4	12	063521084000	**MSN2083**
2.0 16V (RERFJB, RERFJC)	RFJ (EW10A)	103	10/2004 → 09/2007		1,4	12	063521084000	**MSN2083**
2.0 HDi (RERHRH)	RHR (DW10BTED4)	100	09/2004 →		2,0	12	063280090010	**MSN8090**
2.2 HDi	4HT (DW12BTED4)	125	04/2006 →		2,0	12	063280090010	**MSN8090**
2.2 HDi (RE4HXE)	4HX (DW12TED4/FAP)	98	09/2004 →		2,0	12	063280090010	**MSN8090**
C5 Break (TD_)								
1.8 16V	6FY-EW7A	92	04/2008 →		1,4	12	063521084000	**MSN2083**

		kW			kW	V	LONG	SHORT
CITROEN								
C5 Break (TD_)								
2.0 16V	EW10A, RFJ (EW10A)	103	04/2008 → 01/2010		1,4	12	063521084000	**MSN2083**
2.0 16V BioFlex		103	04/2008 → 01/2010		1,4	12	063521084000	**MSN2083**
2.0 HDi	DW10BTED4, RHR (DW10BTED4)	100	02/2008 →		2,0	12	063280090010	**MSN8090**
2.0 HDi 140		103	04/2009 →		2,0	12	063280090010	**MSN8090**
2.0 HDi 165	RHH (DW10CTED4)	120	04/2009 →		2,0	12	063280090010	**MSN8090**
C8 (EA_, EB_)								
2.0	RFN (EW10J4)	100	07/2002 → 05/2006		1,4	12	063521084000	**MSN2083**
2.0 16V	RFJ (EW10A)	104	10/2005 → 05/2010		1,4	12	063521084000	**MSN2083**
2.0 16V	RFJ (EW10A)	103	10/2005 →		1,4	12	063521084000	**MSN2083**
2.0 HDi	RHK (DW10UTED4)	88	02/2007 →		2,0	12	063280090010	**MSN8090**
2.0 HDi	RHM (DW10ATED4), RHT (DW10ATED4), RHW (DW10ATED4)	79	01/2004 →		2,0	12	063280090010	**MSN8090**
2.0 HDi 135	RHR (DW10BTED4)	100	03/2006 →		2,0	12	063280090010	**MSN8090**
2.2	3FZ (EW12J4)	116	07/2002 → 05/2006		1,4	12	063521084000	**MSN2083**
2.2 HDi	4HW (DW12TED4)	94	07/2002 →		2,0	12	063280090010	**MSN8090**
EVASION (22, U6)								
1.8	LFZ (XU7JP)	73	05/1997 → 07/2002		1,1	12	063521070630	**MSN2015**
1.8	LFZ (XU7JP)	73	05/1997 → 07/2002		1,4	12	063521081760	**MSN2079**
2.0	RFU (XU10J2/C)	89	06/1994 → 07/2002		1,1	12	063521070630	**MSN2015**
2.0	RFU (XU10J2/C)	89	06/1994 → 07/2002		1,4	12	063521081760	**MSN2079**
2.0 16V	RFN (EW10J4)	100	05/2000 → 07/2002		1,4	12	063521084000	**MSN2083**
2.0 16V	RFV (XU10J4R)	97	05/1998 → 04/2000		1,1	12	063521070630	**MSN2015**
2.0 16V	RFV (XU10J4R)	97	05/1998 → 04/2000		1,4	12	063521081760	**MSN2079**
2.0 Turbo C.T.	RGX (XU10J2TE)	108	06/1994 → 07/2002		1,1	12	063521070630	**MSN2015**
2.0 Turbo C.T.	RGX (XU10J2TE)	108	06/1994 → 07/2002		1,4	12	063521081760	**MSN2079**
JUMPER Autobus (230P)								
2.0	RFW (XU10J2U)	80	02/1994 → 02/2002		1,1	12	063521070630	**MSN2015**
2.0	RFW (XU10J2U)	80	02/1994 → 02/2002		1,4	12	063521081760	**MSN2079**
2.0 4x4	RFW (XU10J2U)	80	08/1996 → 02/2002		1,1	12	063521070630	**MSN2015**
2.0 4x4	RFW (XU10J2U)	80	08/1996 → 02/2002		1,4	12	063521081760	**MSN2079**
2.8 HDi	8140.43S	94	09/2000 → 02/2002		2,5	12	063521093000	**MSN2026**
2.8 HDi	8140.43S	94	09/2000 → 02/2002		2,3	12	063522230130	**MSN2006**
2.8 HDi 4x4	8140.43S	94	09/2000 → 02/2002		2,5	12	063521093000	**MSN2026**
2.8 HDi 4x4	8140.43S	94	09/2000 → 02/2002		2,3	12	063522230130	**MSN2006**
JUMPER Autobus (244, Z_)								
2.0	XU10J2	81	04/2002 → 05/2006		1,1	12	063521070630	**MSN2015**
2.0	XU10J2	81	04/2002 → 05/2006		1,4	12	063521081760	**MSN2079**
2.2 HDi	DW12TED	74	04/2002 →		2,0	12	063280090010	**MSN8090**
2.8 HDi	8140.43S	94	04/2002 →		2,5	12	063521093000	**MSN2026**
2.8 HDi	8140.43S	94	04/2002 → 05/2006		2,3	12	063522230130	**MSN2006**
JUMPER Furgonato (230L)								
2.0	RFW (XU10J2U)	80	03/1994 → 02/2002		1,1	12	063521070630	**MSN2015**

		kW			kW	V	LONG	SHORT
CITROEN								
JUMPER Furgonato (230L)								
2.0	RFW (XU10J2U)	80	03/1994 → 02/2002		1,4	12	063521081760	**MSN2079**
2.0 4x4		80	10/1996 → 01/2002		1,1	12	063521070630	**MSN2015**
2.0 4x4		80	10/1996 → 01/2002		1,4	12	063521081760	**MSN2079**
2.8 HDi	8140.43S	94	09/2000 → 02/2002		2,5	12	063521093000	**MSN2026**
2.8 HDi	8140.43S	94	09/2000 → 02/2002		2,3	12	063522230130	**MSN2006**
2.8 HDi 4x4	8140.43S	94	09/2000 → 02/2002		2,5	12	063521093000	**MSN2026**
2.8 HDi 4x4	8140.43S	94	09/2000 → 02/2002		2,3	12	063522230130	**MSN2006**
JUMPER Furgonato (244)								
2.0	XU10J2	81	04/2002 → 05/2006		1,1	12	063521070630	**MSN2015**
2.0	XU10J2	81	04/2002 → 05/2006		1,4	12	063521081760	**MSN2079**
2.0 bivalent	XU10J2	81	02/2003 → 05/2006		1,1	12	063521070630	**MSN2015**
2.0 bivalent	XU10J2	81	02/2003 → 05/2006		1,4	12	063521081760	**MSN2079**
2.2 HDi	DW12TED	74	04/2002 →		2,0	12	063280090010	**MSN8090**
2.8 HDi	8140.43N	107	08/2004 →		2,5	12	063521093000	**MSN2026**
2.8 HDi	8140.43N	107	08/2004 → 05/2006		2,3	12	063522230130	**MSN2006**
2.8 HDi	8140.43S	94	04/2002 →		2,5	12	063521093000	**MSN2026**
2.8 HDi	8140.43S	94	04/2002 → 05/2006		2,3	12	063522230130	**MSN2006**
2.8 HDi 4x4	8140.43S	94	04/2002 →		2,5	12	063521093000	**MSN2026**
2.8 HDi 4x4	8140.43S	94	04/2002 → 05/2006		2,3	12	063522230130	**MSN2006**
JUMPER Pianale piatto/Telaio (230)								
2.0	RFW (XU10J2U)	80	03/1994 → 02/2002		1,1	12	063521070630	**MSN2015**
2.0	RFW (XU10J2U)	80	03/1994 → 02/2002		1,4	12	063521081760	**MSN2079**
2.8 HDi	8140.43S	93	10/2000 → 01/2002		2,5	12	063521093000	**MSN2026**
2.8 HDi	8140.43S	94	09/2000 → 02/2002		2,5	12	063521093000	**MSN2026**
2.8 HDi	8140.43S	93	10/2000 → 01/2002		2,3	12	063522230130	**MSN2006**
2.8 HDi	8140.43S	94	09/2000 → 02/2002		2,3	12	063522230130	**MSN2006**
JUMPER Pianale piatto/Telaio (244)								
2.2 HDi		74	02/2002 → 06/2006		2,0	12	063280090010	**MSN8090**
2.2 HDi 16V	DW12TED	74	04/2002 →		2,0	12	063280090010	**MSN8090**
2.8 HDi	8140.43N	107	08/2004 →		2,5	12	063521093000	**MSN2026**
2.8 HDi	8140.43N	107	08/2004 → 05/2006		2,3	12	063522230130	**MSN2006**
2.8 HDi	8140.43S	94	04/2002 →		2,5	12	063521093000	**MSN2026**
2.8 HDi	8140.43S	94	04/2002 → 05/2006		2,3	12	063522230130	**MSN2006**
2.8 HDi 4x4	F28TDCR	94	02/2002 → 06/2006		2,5	12	063521093000	**MSN2026**
2.8 HDi 4x4	F28TDCR	94	02/2002 → 05/2006		2,3	12	063522230130	**MSN2006**
JUMPY								
2.0 HDi 120	RHK (DW10UTED4)	88	01/2007 →		2,0	12	063280090010	**MSN8090**
2.0 HDi 140	RHR (DW10BTED4)	100	01/2007 →		2,0	12	063280090010	**MSN8090**
JUMPY (U6U)								
1.9 D 70	WJZ (DW8)	51	10/1998 → 08/2001		1,4	12	063521084000	**MSN2083**
2.0	RFN (EW10J4)	100	04/2000 → 12/2006		1,4	12	063521084000	**MSN2083**
2.0 HDi 110	RHW (DW10ATED4)	80	06/2000 → 01/2007		1,4	12	063521084000	**MSN2083**
2.0 HDi 110	RHZ (DW10ATED)	80	03/2000 → 01/2007		1,4	12	063521084000	**MSN2083**
2.0 HDi 95	RHX	69	10/1999 → 01/2007		1,4	12	063521084000	**MSN2083**

		kW		i	kW	V	LONG	SHORT
CITROEN								
JUMPY (U6U)								
2.0 i 16V		102	04/2000 → 01/2007		1,4	12	063521084000	**MSN2083**
JUMPY Furgonato								
2.0 HDi 120	RHK (DW10UTED4)	88	01/2007 →		2,0	12	063280090010	**MSN8090**
2.0 HDi 140	RHR (DW10BTED4)	100	01/2007 →		2,0	12	063280090010	**MSN8090**
JUMPY Furgonato (BS_, BT_, BY_, BZ_)								
1.9 D 70	WJZ (DW8)	51	10/1998 → 08/2001		1,4	12	063521084000	**MSN2083**
2.0 HDi 110	RHW (DW10ATED4)	80	01/2002 → 01/2007		1,4	12	063521084000	**MSN2083**
2.0 HDi 110	RHZ (DW10ATED)	80	01/2002 → 01/2007		1,4	12	063521084000	**MSN2083**
2.0 HDi 95	RHX (DW10BTED)	69	10/1999 → 01/2007		1,4	12	063521084000	**MSN2083**
2.0 i 16V		102	04/2000 → 01/2007		1,4	12	063521084000	**MSN2083**
JUMPY Pianale piatto/Telaio (BU_, BV_, BW_, BX_)								
2.0	RFN (EW10J4)	100	12/2003 → 10/2006		1,4	12	063521084000	**MSN2083**
2.0 HDi 110	RHW (DW10ATED4)	80	12/2003 → 10/2006		1,4	12	063521084000	**MSN2083**
2.0 HDi 110	RHZ (DW10ATED)	80	12/2003 → 10/2006		1,4	12	063521084000	**MSN2083**
2.0 HDi 95	RHX	69	10/1999 → 01/2007		1,4	12	063521084000	**MSN2083**
SAXO (S0, S1)								
1.0 X	CDZ (TU9M)	33	05/1996 → 09/2003		1,0	12	063521120410	**MSN2029**
1.0 X	CDZ (TU9M)	37	05/1998 → 06/2003		1,0	12	063521120410	**MSN2029**
1.1 X,SX	HDZ (TU1M)	40	05/1996 → 09/2003		1,0	12	063521120410	**MSN2029**
1.1 X,SX	HDZ (TU1M), HFX (TU1JP)	44	05/1996 → 09/2003		1,0	12	063521120410	**MSN2029**
1.4 VTS	KFW (TU3JP), KFX (TU3JP)	55	05/1996 → 09/2003		1,0	12	063521120410	**MSN2029**
1.6	NFT	74	02/2001 → 09/2003		1,0	12	063521120410	**MSN2029**
1.6	NFX (TU5JP4)	88	07/1996 → 09/2003		1,0	12	063521120410	**MSN2029**
1.6	NFZ (TU5JP)	66	02/1996 → 06/2003		1,0	12	063521120410	**MSN2029**
1.6 VTL,VTR	NFZ (TU5JP)	65	05/1996 → 09/2003		1,0	12	063521120410	**MSN2029**
1.6 VTS	NFT	72	09/2000 → 09/2003		1,0	12	063521120410	**MSN2029**
1.6 VTS	NFX (TU5JP4)	87	06/1996 → 09/2003		1,0	12	063521120410	**MSN2029**
XANTIA (X1)								
1.6 i	BFZ (XU5JP)	65	03/1993 → 01/1998		1,1	12	063521070630	**MSN2015**
1.6 i	BFZ (XU5JP)	65	03/1993 → 01/1998		1,4	12	063521081760	**MSN2079**
1.8 i	LFX (XU7JB)	66	04/1997 → 01/1998		1,1	12	063521070630	**MSN2015**
1.8 i	LFX (XU7JB)	66	04/1997 → 01/1998		1,4	12	063521081760	**MSN2079**
1.8 i	LFZ (XU7JP)	74	03/1993 → 01/1998		1,1	12	063521070630	**MSN2015**
1.8 i	LFZ (XU7JP)	74	03/1993 → 01/1998		1,4	12	063521081760	**MSN2079**
1.8 i 16V	LFY (XU7JP4)	81	06/1995 → 01/1998		1,1	12	063521070630	**MSN2015**
1.8 i 16V	LFY (XU7JP4)	81	06/1995 → 01/1998		1,4	12	063521081760	**MSN2079**
2.0 i	RFX (XU10J2C)	89	03/1993 → 01/1998		1,1	12	063521070630	**MSN2015**
2.0 i	RFX (XU10J2C)	89	03/1993 → 01/1998		1,4	12	063521081760	**MSN2079**
2.0 i 16V	RFV (XU10J4R)	97	06/1995 → 01/1998		1,1	12	063521070630	**MSN2015**
2.0 i 16V	RFV (XU10J4R)	97	06/1995 → 01/1998		1,4	12	063521081760	**MSN2079**
2.0 Turbo	RGX (XU10J2TE)	108	06/1995 → 01/1998		1,1	12	063521070630	**MSN2015**
2.0 Turbo	RGX (XU10J2TE)	108	06/1995 → 01/1998		1,4	12	063521081760	**MSN2079**

		kW			kW	V	LONG	SHORT
CITROEN								
XANTIA (X2)								
1.6 i SX		65	03/1998 → 03/2001		1,1	12	063521070630	**MSN2015**
1.6 i SX		65	03/1998 → 03/2001		1,4	12	063521081760	**MSN2079**
1.8 i	LFX (XU7JB)	66	01/1998 → 12/2001		1,1	12	063521070630	**MSN2015**
1.8 i	LFX (XU7JB)	66	01/1998 → 12/2001		1,4	12	063521081760	**MSN2079**
1.8 i 16V	LFY (XU7JP4)	81	01/1998 → 12/2001		1,1	12	063521070630	**MSN2015**
1.8 i 16V	LFY (XU7JP4)	81	01/1998 → 12/2001		1,4	12	063521081760	**MSN2079**
2.0 i	RFX (XU10J2C)	89	01/1998 → 12/2001		1,1	12	063521070630	**MSN2015**
2.0 i	RFX (XU10J2C)	89	01/1998 → 12/2001		1,4	12	063521081760	**MSN2079**
2.0 i 16V	RFV (XU10J4R)	97	01/1998 → 12/2001		1,1	12	063521070630	**MSN2015**
2.0 i 16V	RFV (XU10J4R)	97	01/1998 → 12/2001		1,4	12	063521081760	**MSN2079**
2.0 Turbo	RGX (XU10J2TE)	108	01/1998 → 12/2001		1,1	12	063521070630	**MSN2015**
2.0 Turbo	RGX (XU10J2TE)	108	01/1998 → 12/2001		1,4	12	063521081760	**MSN2079**
XANTIA Break (X1)								
1.8 i	LFX (XU7JB)	66	04/1997 → 01/1998		1,1	12	063521070630	**MSN2015**
1.8 i	LFX (XU7JB)	66	04/1997 → 01/1998		1,4	12	063521081760	**MSN2079**
1.8 i	LFZ (XU7JP)	74	09/1995 → 01/1998		1,1	12	063521070630	**MSN2015**
1.8 i	LFZ (XU7JP)	74	09/1995 → 01/1998		1,4	12	063521081760	**MSN2079**
1.8 i 16V	LFY (XU7JP4)	81	04/1997 → 01/1998		1,1	12	063521070630	**MSN2015**
1.8 i 16V	LFY (XU7JP4)	81	04/1997 → 01/1998		1,4	12	063521081760	**MSN2079**
2.0 i	RFX (XU10J2C)	89	09/1995 → 01/1998		1,1	12	063521070630	**MSN2015**
2.0 i	RFX (XU10J2C)	89	09/1995 → 01/1998		1,4	12	063521081760	**MSN2079**
2.0 i 16V	RFV (XU10J4R)	97	09/1995 → 01/1998		1,1	12	063521070630	**MSN2015**
2.0 i 16V	RFV (XU10J4R)	97	09/1995 → 01/1998		1,4	12	063521081760	**MSN2079**
2.0 Turbo	RGX (XU10J2TE)	108	09/1995 → 01/1998		1,1	12	063521070630	**MSN2015**
2.0 Turbo	RGX (XU10J2TE)	108	09/1995 → 01/1998		1,4	12	063521081760	**MSN2079**
XANTIA Break (X2)								
1.8 i	LFX (XU7JB)	66	01/1998 → 12/2001		1,1	12	063521070630	**MSN2015**
1.8 i	LFX (XU7JB)	66	01/1998 → 12/2001		1,4	12	063521081760	**MSN2079**
1.8 i 16V	LFY (XU7JP4)	81	01/1998 → 12/2001		1,1	12	063521070630	**MSN2015**
1.8 i 16V	LFY (XU7JP4)	81	01/1998 → 12/2001		1,4	12	063521081760	**MSN2079**
2.0 i	RFX (XU10J2C)	89	01/1998 → 12/2001		1,1	12	063521070630	**MSN2015**
2.0 i	RFX (XU10J2C)	89	01/1998 → 12/2001		1,4	12	063521081760	**MSN2079**
2.0 i 16V	RFV (XU10J4R)	97	01/1998 → 12/2001		1,1	12	063521070630	**MSN2015**
2.0 i 16V	RFV (XU10J4R)	97	01/1998 → 12/2001		1,4	12	063521081760	**MSN2079**
2.0 Turbo	RGX (XU10J2TE)	108	01/1998 → 12/2001		1,1	12	063521070630	**MSN2015**
2.0 Turbo	RGX (XU10J2TE)	108	01/1998 → 12/2001		1,4	12	063521081760	**MSN2079**
XM (Y3)								
2.0	R6A	94	05/1989 → 06/1994		1,1	12	063521070630	**MSN2015**
2.0	R6A	94	05/1989 → 06/1994		1,4	12	063521081760	**MSN2079**
2.0		84	05/1989 → 04/1994		1,1	12	063521070630	**MSN2015**
2.0		84	05/1989 → 04/1994		1,4	12	063521081760	**MSN2079**
2.0 i	RDZ (XU10MZ)	79	05/1989 → 04/1994		1,1	12	063521070630	**MSN2015**
2.0 i	RDZ (XU10MZ)	79	05/1989 → 04/1994		1,4	12	063521081760	**MSN2079**
2.0 i	RFZ (XU10J2)	89	05/1989 → 06/1994		1,1	12	063521070630	**MSN2015**

		kW		i	kW	V	LONG	SHORT
CITROEN								
XM (Y3)								
2.0 i	RFZ (XU10J2)	89	05/1989 → 06/1994		1,4	12	063521081760	**MSN2079**
2.0 i Turbo	RGY (XU10J2TE/Z)	104	09/1992 → 06/1994		1,1	12	063521070630	**MSN2015**
2.0 i Turbo	RGY (XU10J2TE/Z)	104	09/1992 → 06/1994		1,4	12	063521081760	**MSN2079**
XM (Y4)								
2.0 i 16V	RFV (XU10J4R)	97	07/1994 → 10/2000		1,1	12	063521070630	**MSN2015**
2.0 i 16V	RFV (XU10J4R)	97	07/1994 → 10/2000		1,4	12	063521081760	**MSN2079**
2.0 Turbo	RGX (XU10J2TE)	108	07/1994 → 09/1995		1,1	12	063521070630	**MSN2015**
2.0 Turbo	RGX (XU10J2TE)	108	07/1994 → 09/1995		1,4	12	063521081760	**MSN2079**
2.5 TD	THY (DK5ATE)	95	05/1994 → 10/2000		2,0	12	063280090010	**MSN8090**
XM Break (Y3)								
2.0	R6A	94	05/1989 → 06/1994		1,1	12	063521070630	**MSN2015**
2.0	R6A	94	05/1989 → 06/1994		1,4	12	063521081760	**MSN2079**
2.0 i	RFZ (XU10J2)	89	11/1991 → 04/1994		1,1	12	063521070630	**MSN2015**
2.0 i	RFZ (XU10J2)	89	11/1991 → 04/1994		1,4	12	063521081760	**MSN2079**
2.0 i (Y3A)	RDZ (XU10MZ), XU102C	79	11/1991 → 04/1994		1,1	12	063521070630	**MSN2015**
2.0 i (Y3A)	RDZ (XU10MZ), XU102C	79	11/1991 → 04/1994		1,4	12	063521081760	**MSN2079**
2.0 Turbo	RGY (XU10J2TE/Z)	104	09/1992 → 04/1994		1,1	12	063521070630	**MSN2015**
2.0 Turbo	RGY (XU10J2TE/Z)	104	09/1992 → 04/1994		1,4	12	063521081760	**MSN2079**
XM Break (Y4)								
2.0 i 16V	RFV (XU10J4R)	97	07/1994 → 10/2000		1,1	12	063521070630	**MSN2015**
2.0 i 16V	RFV (XU10J4R)	97	07/1994 → 10/2000		1,4	12	063521081760	**MSN2079**
2.0 Turbo	RGX (XU10J2TE), RGY (XU10J2TE/Z)	108	07/1994 → 09/1995		1,1	12	063521070630	**MSN2015**
2.0 Turbo	RGX (XU10J2TE), RGY (XU10J2TE/Z)	108	07/1994 → 09/1995		1,4	12	063521081760	**MSN2079**
2.5 TD	THY (DK5ATE)	95	05/1994 → 10/2000		2,0	12	063280090010	**MSN8090**
XSARA (N1)								
1.4 i	KFW (TU3JP), KFX (TU3JP)	55	07/1997 → 08/2000		1,0	12	063521120410	**MSN2029**
1.6 16V	NFU (TU5JP4)	80	09/2000 → 03/2005		1,0	12	063521120410	**MSN2029**
1.6 i	NFZ (TU5JP)	65	07/1997 → 08/2000		1,0	12	063521120410	**MSN2029**
1.8 i	LFX (XU7JB)	66	07/1997 → 09/2000		1,1	12	063521070630	**MSN2015**
1.8 i	LFX (XU7JB)	66	07/1997 → 08/2000		1,4	12	063521081760	**MSN2079**
1.8 i 16V	LFY (XU7JP4)	81	07/1997 → 09/2000		1,1	12	063521070630	**MSN2015**
1.8 i 16V	LFY (XU7JP4)	81	07/1997 → 08/2000		1,4	12	063521081760	**MSN2079**
1.8 i Aut.	LFZ (XU7JP)	74	07/1997 → 09/2000		1,1	12	063521070630	**MSN2015**
1.8 i Aut.	LFZ (XU7JP)	74	07/1997 → 08/2000		1,4	12	063521081760	**MSN2079**
1.9 D	WJY (DW8B), WJZ (DW8)	51	09/2000 → 03/2005		1,4	12	063521084000	**MSN2083**
2.0 16V	RFN (EW10J4)	100	09/2000 → 03/2005		1,4	12	063521084000	**MSN2083**
2.0 16V	RFS (XU10J4RS)	120	07/1997 → 09/2000		1,1	12	063521070630	**MSN2015**
2.0 16V	RFS (XU10J4RS)	120	07/1997 → 08/2000		1,4	12	063521081760	**MSN2079**
2.0 16V	RFV (XU10J4R)	97	07/1998 → 09/2000		1,1	12	063521070630	**MSN2015**
2.0 16V	RFV (XU10J4R)	97	07/1998 → 08/2000		1,4	12	063521081760	**MSN2079**
2.0 HDi 109	RHZ (DW10ATED)	80	05/2001 → 03/2005		1,4	12	063521084000	**MSN2083**

		kW			kW	V	LONG	SHORT
CITROEN								
XSARA (N1)								
2.0 HDi 90	RHY (DW10TD)	66	09/2000 → 03/2005		1,4	12	063521084000	**MSN2083**
XSARA Break (N2)								
1.4 i	KFW (TU3JP), KFX (TU3JP)	55	04/1998 → 08/2000		1,0	12	063521120410	**MSN2029**
1.6 16V	NFU (TU5JP4)	80	09/2000 → 08/2005		1,0	12	063521120410	**MSN2029**
1.6 i	NFZ (TU5JP)	65	10/1997 → 08/2000		1,0	12	063521120410	**MSN2029**
1.8 i	LFX (XU7JB)	66	04/1998 → 09/2000		1,1	12	063521070630	**MSN2015**
1.8 i	LFX (XU7JB)	66	04/1998 → 08/2000		1,4	12	063521081760	**MSN2079**
1.8 i 16V	LFY (XU7JP4)	81	04/1998 → 09/2000		1,1	12	063521070630	**MSN2015**
1.8 i 16V	LFY (XU7JP4)	81	04/1998 → 08/2000		1,4	12	063521081760	**MSN2079**
1.8 i Aut.	LFZ (XU7JP)	74	04/1998 → 09/2000		1,1	12	063521070630	**MSN2015**
1.8 i Aut.	LFZ (XU7JP)	74	04/1998 → 08/2000		1,4	12	063521081760	**MSN2079**
1.9 D	WJY (DW8B), WJZ (DW8)	51	09/2000 → 08/2005		1,4	12	063521084000	**MSN2083**
2.0 16V	RFN (EW10J4)	100	09/2000 → 08/2005		1,4	12	063521084000	**MSN2083**
2.0 16V	RFV (XU10J4R)	97	07/1998 → 09/2000		1,1	12	063521070630	**MSN2015**
2.0 16V	RFV (XU10J4R)	97	07/1998 → 08/2000		1,4	12	063521081760	**MSN2079**
2.0 HDi 109	RHZ (DW10ATED)	80	05/2001 → 08/2005		1,4	12	063521084000	**MSN2083**
2.0 HDI 90	RHY (DW10TD)	66	09/2000 → 08/2005		1,4	12	063521084000	**MSN2083**
XSARA Coupe (N0)								
1.4 i	KFW (TU3JP), KFX (TU3JP)	55	03/1998 → 08/2000		1,0	12	063521120410	**MSN2029**
1.6 16V	NFU (TU5JP4)	80	09/2000 → 03/2005		1,0	12	063521120410	**MSN2029**
1.6 i	NFZ (TU5JP)	65	02/1998 → 09/2000		1,0	12	063521120410	**MSN2029**
1.8 i	LFX (XU7JB)	66	02/1998 → 09/2000		1,1	12	063521070630	**MSN2015**
1.8 i	LFX (XU7JB)	66	02/1998 → 08/2000		1,4	12	063521081760	**MSN2079**
1.8 i	LFZ (XU7JP)	74	02/1998 → 09/2000		1,1	12	063521070630	**MSN2015**
1.8 i	LFZ (XU7JP)	74	02/1998 → 08/2000		1,4	12	063521081760	**MSN2079**
1.8 i 16V	LFY (XU7JP4)	81	02/1998 → 09/2000		1,1	12	063521070630	**MSN2015**
1.8 i 16V	LFY (XU7JP4)	81	02/1998 → 08/2000		1,4	12	063521081760	**MSN2079**
1.8 i 16V	LFY (XU7JP4)	81	02/1998 → 09/2000		1,0	12	063521120410	**MSN2029**
1.9 D	WJY (DW8B), WJZ (DW8)	51	09/2000 → 03/2005		1,4	12	063521084000	**MSN2083**
2.0	RFV (XU10J4R)	97	08/1998 → 08/2000		1,1	12	063521070630	**MSN2015**
2.0	RFV (XU10J4R)	97	08/1998 → 08/2000		1,4	12	063521081760	**MSN2079**
2.0 16V	RFN (EW10J4)	100	09/2000 → 03/2005		1,4	12	063521084000	**MSN2083**
2.0 HDi 109	RHZ (DW10ATED)	80	05/2001 → 03/2005		1,4	12	063521084000	**MSN2083**
2.0 HDI 90	RHY (DW10TD)	66	09/2000 → 03/2005		1,4	12	063521084000	**MSN2083**
2.0 i 16V	RFS (XU10J4RS)	120	02/1998 → 08/2000		1,1	12	063521070630	**MSN2015**
2.0 i 16V	RFS (XU10J4RS)	120	02/1998 → 08/2000		1,4	12	063521081760	**MSN2079**
XSARA PICASSO (N68)								
1.6	NFV (TU5JP)	70	09/2000 →		1,0	12	063521120410	**MSN2029**
1.6	NFZ (TU5JP)	65	01/2000 →		1,0	12	063521120410	**MSN2029**
1.6 16V	NFU (TU5JP4)	80	09/2005 →		1,0	12	063521120410	**MSN2029**
1.6 Chrono		74	04/2001 → 10/2004		1,0	12	063521120410	**MSN2029**
1.8 16V	6FZ (EW7J4), LFY (XU7JP4)	85	02/2000 →		1,4	12	063521084000	**MSN2083**

		kW		i	kW	V	LONG	SHORT
CITROEN								
XSARA PICASSO (N68)								
2.0 16V	RFN (EW10J4)	100	01/2003 →		1,4	12	063521084000	**MSN2083**
2.0 HDi	RHY (DW10TD)	66	01/2000 →		1,4	12	063521084000	**MSN2083**
ZX (N2)								
1.1	HDZ (TU1M)	44	10/1991 → 03/1994		1,0	12	063521120410	**MSN2029**
1.4	KDZ (TU3M/Z)	55	03/1991 → 06/1997		1,0	12	063521120410	**MSN2029**
1.4 i	KDX (TU3M/Z), KDZ (TU3M/Z), KFX (TU3JP)	55	08/1992 → 08/1996		1,0	12	063521120410	**MSN2029**
1.6 i	BDY (XU5M), BFZ (XU5JP)	65	03/1991 → 12/1994		1,1	12	063521070630	**MSN2015**
1.8	LFY (XU7JP4)	82	04/1996 → 10/1997		1,1	12	063521070630	**MSN2015**
1.8 i	LFZ (XU7JP)	74	07/1992 → 06/1997		1,1	12	063521070630	**MSN2015**
1.8 i 16V	LFY (XU7JP4)	81	01/1996 → 06/1997		1,1	12	063521070630	**MSN2015**
1.9	D6E (XU9JA)	93	03/1991 → 06/1997		1,4	12	063521081760	**MSN2079**
1.9		96	03/1991 → 09/1993		1,4	12	063521081760	**MSN2079**
1.9 i	DKZ (XU9JA)	88	03/1991 → 06/1997		1,1	12	063521070630	**MSN2015**
1.9 i	DKZ (XU9JA)	88	03/1991 → 06/1997		1,4	12	063521081760	**MSN2079**
2.0		90	07/1994 → 10/1997		1,4	12	063521081760	**MSN2079**
2.0 i	RFX (XU10J2C)	89	07/1992 → 06/1997		1,4	12	063521081760	**MSN2079**
ZX Break (N2)								
1.4 i	KDX (TU3M/Z), KDY (TU3M), KFX (TU3JP)	55	10/1993 → 08/1996		1,0	12	063521120410	**MSN2029**
1.6 i	BDY (XU5M), BFZ (XU5JP)	65	10/1993 → 10/1997		1,1	12	063521070630	**MSN2015**
1.8 i	LFZ (XU7JP)	74	10/1993 → 10/1997		1,1	12	063521070630	**MSN2015**
1.8 i 16V	LFY (XU7JP4)	81	01/1996 → 02/1998		1,1	12	063521070630	**MSN2015**
DAEWOO								
ESPERO (KLEJ)								
1.5 16V	A15MF	66	02/1995 → 06/1999		0,9	12	063521120350	**MSN2004**
1.5 16V	A15MF	66	02/1995 → 06/1999		1,4	12	063522604010	**MSN2604**
1.5 16V		65	10/1993 → 09/1994		0,9	12	063521120350	**MSN2004**
1.8	C18LE	70	02/1995 → 06/1999		1,2	12	063522601010	**MSN2601**
2.0	C20LZ	74	10/1991 → 09/1993		1,2	12	063522601010	**MSN2601**
EVANDA (KLAL)								
2.0	L88, X 20 SED	96	08/2002 →		1,5	12	063522612010	**MSN2612**
KALOS (KLAS)								
1.2	B12S1	53	04/2003 →		0,8	12	063522629010	**MSN2629**
1.4	F14S3	61	09/2002 →		0,8	12	063522602010	**MSN2602**
1.4 16V	F14D3	69	04/2003 →		0,8	12	063522602010	**MSN2602**
KORANDO (KJ)								
2.3		105	01/1999 → 12/2000		1,1	12	063521074030	**MSN2074**
KORANDO Cabrio (KJ)								
2.0 16V		94	02/1999 → 12/2000		1,1	12	063521074030	**MSN2074**
2.3		105	02/1999 → 12/2000		1,1	12	063521074030	**MSN2074**
LACETTI 2 volumi /Coda spiovente (KLAN)								
1.4	F14D3	70	02/2004 →		0,8	12	063522602010	**MSN2602**

		kW			kW	V	LONG	SHORT
DAEWOO								
LACETTI 2 volumi /Coda spiovente (KLAN)								
1.6	F16D3	80	02/2004 →		0,8	12	063522602010	**MSN2602**
LANOS (KLAT)								
1.4	A14SMS	55	05/1997 →		1,4	12	063522604010	**MSN2604**
1.5	A15SMS	63	05/1997 →		1,4	12	063522604010	**MSN2604**
1.6 16V	A16DMS	78	05/1997 →		1,4	12	063522604010	**MSN2604**
LANOS Tre volumi (KLAT)								
1.4	A14SMS	55	05/1997 →		1,4	12	063522604010	**MSN2604**
1.5	A15SMS, Y15L	63	05/1997 →		1,4	12	063522604010	**MSN2604**
1.6 16V	A16DMS	78	05/1997 →		0,8	12	063522602010	**MSN2602**
1.6 16V	A16DMS	78	05/1997 →		1,4	12	063522604010	**MSN2604**
LEGANZA (KLAV)								
2.0 16V	X 20 SED	98	06/1997 → 12/2002		1,5	12	063522612010	**MSN2612**
MATIZ (KLYA)								
0.8	F8CV	38	09/1998 → 03/2002		0,8	12	063522607010	**MSN2607**
1.0		47	01/2003 → 09/2004		0,8	12	063522607010	**MSN2607**
MUSSO (FJ)								
2.3	M 111.970	103	01/1999 → 12/2000		1,1	12	063521074030	**MSN2074**
NEXIA (KLETN)								
1.5	G15MF	44	08/1996 → 08/1997		0,8	12	063522602010	**MSN2602**
1.5	G15MF	52	02/1995 → 08/1997		0,8	12	063522602010	**MSN2602**
1.5	G15MF	55	02/1995 → 08/1997		0,8	12	063522602010	**MSN2602**
1.5	G15MF	52	02/1995 → 08/1997		1,4	12	063522604010	**MSN2604**
1.5	G15MF	55	02/1995 → 08/1997		1,4	12	063522604010	**MSN2604**
NEXIA Tre volumi (KLETN)								
1.5	G15MF	55	02/1995 → 08/1997		0,8	12	063522602010	**MSN2602**
1.5	G15MF	44	08/1996 → 08/1997		0,8	12	063522602010	**MSN2602**
1.5	G15MF	52	02/1995 → 08/1997		0,8	12	063522602010	**MSN2602**
1.5	G15MF	55	02/1995 → 08/1997		1,4	12	063522604010	**MSN2604**
1.5	G15MF	52	02/1995 → 08/1997		1,4	12	063522604010	**MSN2604**
NUBIRA (KLAJ)								
1.6 16V	A16DMS	78	05/1997 →		1,4	12	063522604010	**MSN2604**
NUBIRA Tre volumi (KLAJ)								
1.6 16V	A16DMS	78	05/1997 →		1,4	12	063522604010	**MSN2604**
NUBIRA Tre volumi (KLAN)								
1.6	F16D3	80	07/2003 →		0,8	12	063522602010	**MSN2602**
1.6	F16D3	80	03/2004 →		1,4	12	063522604010	**MSN2604**
1.8	T18SED	90	04/2004 →		1,5	12	063522612010	**MSN2612**
NUBIRA Wagon (KLAJ)								
1.6 16V	A16DMS	78	05/1997 →		1,4	12	063522604010	**MSN2604**
NUBIRA Wagon (KLAN)								
1.6	F16D3	80	03/2004 →		1,4	12	063522604010	**MSN2604**
1.8	T18SED	90	04/2004 →		1,5	12	063522612010	**MSN2612**
REZZO (KLAU)								
1.8	A18DMS	72	09/2000 →		1,4	12	063522604010	**MSN2604**

		kW		i	kW	V	LONG	SHORT
DAEWOO								
REZZO (KLAU)								
1.8		74	09/2000 →		1,4	12	063522604010	**MSN2604**
2.0		94	09/2000 →		1,5	12	063522612010	**MSN2612**
FIAT								
127								
0.9	100 GL.000	33	06/1973 → 05/1983		0,8	12	063222908010	**MSN290**
0.9	100 GL.048	29	06/1971 → 05/1983		0,8	12	063222908010	**MSN290**
131								
2.0 D	8144.65	44	07/1978 → 08/1984		2,5	12	063217154010	**MSN230**
2.5 Diesel	8144.61	53	06/1978 → 02/1984		2,5	12	063217154010	**MSN230**
131 SW/Panorama								
2.0 D	8144.65	44	07/1978 → 08/1984		2,5	12	063217154010	**MSN230**
2.5 Super Diesel (AF)	8144.61	53	03/1979 → 12/1984		2,5	12	063217154010	**MSN230**
132								
2.0 D	8144.65	44	07/1978 → 12/1981		2,5	12	063217154010	**MSN230**
2.5 D	8144.61	53	07/1978 → 12/1981		2,5	12	063217154010	**MSN230**
500								
1.2	169 A4.000	51	10/2007 →		0,9	12	063102021010	**MSN402**
1.2		51	10/2007 →		1,0	12	063280060010	**MSN8060**
1.2 LPG		51	12/2010 →		1,0	12	063280061010	**MSN8061**
1.3 D Multijet	169 A1.000	55	10/2007 →		1,3	12	063280045010	**MSN8045**
1.4	169 A3.000	74	10/2007 →		0,9	12	063102021010	**MSN402**
1.4		74	10/2007 →		1,0	12	063280060010	**MSN8060**
1.4 Abarth		132	08/2008 →		1,0	12	063280060010	**MSN8060**
1.4 Abarth		118	08/2008 →		1,0	12	063280060010	**MSN8060**
1.4 Abarth		99	08/2008 →		1,0	12	063280060010	**MSN8060**
1.4 Abarth		140	08/2008 →		1,0	12	063280060010	**MSN8060**
500 C								
1.3 D Multijet	169 A1.000	55	09/2009 →		1,3	12	063280045010	**MSN8045**
ARGENTA (132A)								
2500 Diesel	8144.61	53	06/1981 → 11/1985		2,5	12	063217154010	**MSN230**
2500 Turbodiesel	8144.61.500.81	66	07/1983 → 08/1985		2,5	12	063217154010	**MSN230**
BARCHETTA (183)								
1.8 16V	183 A1.000, 188 A6.000	96	04/1995 → 04/2004		1,4	12	063111007010	**MSN807**
1.8 16V	183 A1.000, 188 A6.000	96	04/1995 → 02/2005		1,1	12	063521070660	**MSN2069**
1.8 16V	183 A1.000, 188 A6.000	96	04/1995 → 02/2005		1,1	12	063521074110	**MSN2076**
BRAVA (182)								
1.2 16V 80	182 B2.000	60	12/1998 → 10/2000		0,8	12	063101015010	**MSN829**
1.2 16V 80	182 B2.000	60	12/1998 → 10/2000		0,9	12	063102018010	**MSN923**
1.2 16V 80	182 B2.000	60	12/1998 → 10/2000		1,0	12	063103025010	**MSN927**
1.2 16V 80	188 A5.000	59	10/2000 → 10/2001		0,8	12	063101015010	**MSN829**
1.2 16V 80	188 A5.000	59	10/2000 → 10/2001		0,9	12	063102018010	**MSN923**
1.2 16V 80	188 A5.000	59	10/2000 → 10/2001		1,0	12	063103025010	**MSN927**

		kW			kW	V	LONG	SHORT
FIAT								
BRAVA (182)								
1.4 (182.BG)	182 A5.000	55	10/1995 → 10/1998		0,8	12	063102003010	**MSN603**
1.4 12 V (182.BA)	182 A3.000	59	10/1995 → 10/2001		0,8	12	063102003010	**MSN603**
1.6 16V (182.BB)	182 A4.000	76	02/1996 → 10/2001		1,0	12	063103022010	**MSN924**
1.6 16V (182.BB)	182 A4.000	76	02/1996 → 10/2001		1,4	12	063111033010	**MSN405**
1.6 16V (182.BB)	182 A4.000	76	02/1996 → 12/1998		0,9	12	063223085010	**MSN520**
1.6 16V (182.BB)	182 A4.000	76	06/2000 → 09/2001		1,1	12	063521070910	**MSN2017**
1.6 16V (182.BH)	182 A6.000	66	10/1995 → 10/2001		1,0	12	063103022010	**MSN924**
1.6 16V (182.BH)	182 A6.000	66	10/1995 → 12/1998		0,9	12	063223101010	**MSN274**
1.8 GT 16V (182.BC)	182 A2.000	83	10/1995 → 10/2001		1,0	12	063103022010	**MSN924**
1.8 GT 16V (182.BC)	182 A2.000	83	10/1995 → 10/2001		1,4	12	063111007010	**MSN807**
1.8 GT 16V (182.BC)	182 A2.000	83	10/1995 → 10/2001		0,9	12	063223085010	**MSN520**
1.8 GT 16V (182.BC)	182 A2.000	83	02/1997 → 09/2001		1,1	12	063521070660	**MSN2069**
1.9 JTD 105	182 B4.000	77	12/1998 → 10/2001		1,8	12	063113002010	**MSN816**
1.9 TD 100 S (182.BF)	182 A7.000	74	01/1998 → 10/2001		1,8	12	063113002010	**MSN816**
1.9 TD 75 S (182.BF)	182 A8.000	55	01/1998 → 10/2001		1,8	12	063113002010	**MSN816**
2.0	182 B7.000	113	11/1998 → 08/2000		1,1	12	063521070660	**MSN2069**
BRAVO I (182)								
1.2 16V 80	182 B2.000	60	12/1998 → 10/2000		0,8	12	063101015010	**MSN829**
1.2 16V 80	182 B2.000	60	12/1998 → 10/2000		0,9	12	063102018010	**MSN923**
1.2 16V 80	182 B2.000	60	12/1998 → 10/2000		1,0	12	063103025010	**MSN927**
1.2 16V 80	188 A5.000	59	10/2000 → 10/2001		0,8	12	063101015010	**MSN829**
1.2 16V 80	188 A5.000	59	10/2000 → 10/2001		0,9	12	063102018010	**MSN923**
1.2 16V 80	188 A5.000	59	10/2000 → 10/2001		1,0	12	063103025010	**MSN927**
1.4 (182.AA)	182 A3.000	59	10/1995 → 10/2001		0,8	12	063102003010	**MSN603**
1.4 (182.AG)	182 A5.000	55	10/1995 → 10/2001		0,8	12	063102003010	**MSN603**
1.6 16V (182.AB)	182 A4.000	76	03/1996 → 10/2001		1,0	12	063103022010	**MSN924**
1.6 16V (182.AB)	182 A4.000	76	03/1996 → 12/1998		0,9	12	063223085010	**MSN520**
1.6 16V (182.AB)	182 A4.000	76	06/2000 → 09/2001		1,1	12	063521070910	**MSN2017**
1.6 16V (182.AH)	182 A6.000	66	10/1995 → 10/2001		1,0	12	063103022010	**MSN924**
1.6 16V (182.AH)	182 A6.000	66	10/1995 → 12/1998		0,9	12	063223101010	**MSN274**
1.8 GT (182.AC)	182 A2.000	83	11/1996 → 10/2001		1,0	12	063103022010	**MSN924**
1.8 GT (182.AC)	182 A2.000	83	11/1996 → 10/2001		1,4	12	063111007010	**MSN807**
1.8 GT (182.AC)	182 A2.000	83	11/1996 → 10/2001		0,9	12	063223085010	**MSN520**
1.8 GT (182.AC)	182 A2.000	83	02/1997 → 09/2001		1,1	12	063521070660	**MSN2069**
1.9 JTD 105	182 B4.000	77	12/1998 → 10/2001		1,8	12	063113002010	**MSN816**
1.9 TD 100 S (182.AF)	182 A7.000	74	01/1998 → 10/2001		1,8	12	063113002010	**MSN816**
1.9 TD 75 S (182.AF)	182 A8.000	55	01/1998 → 10/2001		1,8	12	063113002010	**MSN816**
2.0 HGT 20V (182.AD)	182 A1.000	108	11/1996 → 07/1998		1,4	12	063111007010	**MSN807**
2.0 HGT 20V (182AQ)	182 B7.000	113	07/1998 → 10/2001		1,4	12	063111007010	**MSN807**
2.0 HGT 20V (182AQ)	182 B7.000	113	11/1998 → 09/2001		1,1	12	063521070660	**MSN2069**
BRAVO II (198)								
1.4		66	04/2007 →		1,0	12	063280060010	**MSN8060**
1.4 16V		103	03/2008 →		1,0	12	063280060010	**MSN8060**
1.4 LPG		66	11/2009 →		1,0	12	063280061010	**MSN8061**

		kW		i	kW	V	LONG	SHORT
FIAT								
BRAVO II (198)								
1.4 T-Jet		112	06/2011 →		1,0	12	063280060010	**MSN8060**
1.4 T-Jet		110	09/2007 →		1,0	12	063280060010	**MSN8060**
1.4 T-Jet		88	09/2007 →		1,0	12	063280060010	**MSN8060**
1.6 D Multijet	198 A3.000	77	03/2008 →		2,2	12	063521092680	**MSN2085**
1.6 D Multijet	198 A6.000	66	03/2010 →		1,4	12	063521082390	**MSN2119**
1.9 D Multijet	192 A8.000	88	04/2007 →		2,2	12	063521092680	**MSN2085**
1.9 D Multijet	192 B5.000	66	04/2007 → 12/2008		2,2	12	063521092680	**MSN2085**
1.9 D Multijet	937 A5.000	110	04/2007 →		2,2	12	063521092680	**MSN2085**
CAMPAGNOLA								
2.4 D	8144.61.200	53	06/1979 → 10/1986		2,5	12	063217148010	**MSN229**
CINQUECENTO (170)								
0.9 (170AB)	170 A1.000	30	07/1991 → 12/1993		0,8	12	063222908010	**MSN290**
0.9 i.e. (170AC)	170 A1.046	30	07/1991 → 12/1993		0,8	12	063222908010	**MSN290**
0.9 i.e. S (170AF, 170CF)	1170 A1.000, 1170 A1.046	29	07/1991 → 07/1998		0,8	12	063222908010	**MSN290**
1.1 Sporting (170AH)	176 B2.000	40	01/1995 → 01/1998		0,8	12	063101015010	**MSN829**
1.1 Sporting (170AH)	176 B2.000	40	10/1994 → 01/1998		0,9	12	063102022010	**MSN418**
1.1 Sporting (170AH)	176 B2.000	40	06/1995 → 01/1998		0,8	12	063521130060	**MSN2091**
COUPE (FA/175)								
1.8 16V	183 A1.000	96	03/1996 → 08/2000		1,4	12	063111007010	**MSN807**
1.8 16V	183 A1.000	96	10/1996 → 08/2000		1,1	12	063521070660	**MSN2069**
2.0 20V	182 A1.000	108	08/1996 → 04/1998		1,4	12	063111007010	**MSN807**
2.0 20V	182 B3.000	113	10/1998 → 08/2000		1,4	12	063111007010	**MSN807**
2.0 20V	182 B3.000	113	04/1998 → 08/2000		1,1	12	063521070660	**MSN2069**
2.0 20V Turbo	175 A3.000	162	08/1996 → 08/2000		1,4	12	063111007010	**MSN807**
2.0 20V Turbo	175 A3.000	162	04/1998 → 08/2000		1,1	12	063521070660	**MSN2069**
CROMA (194)								
1.9 D Multijet	939 A2.000	110	06/2005 →		2,2	12	063521092680	**MSN2085**
DOBLO (119)								
1.2 (223AXA1A)	223 A5.000	48	03/2001 → 12/2005		0,9	12	063102021010	**MSN402**
1.3 D Multijet	223 A9.000	62	10/2005 →		1,3	12	063280045010	**MSN8045**
1.6	182 B6.000	68	01/2003 → 09/2005		1,1	12	063521070910	**MSN2017**
1.6 16V (223AXD1A)	182 B6.000	76	10/2001 →		0,9	12	063223101010	**MSN274**
1.6 16V (223AXD1A)	182 B6.000	76	10/2001 → 09/2005		1,1	12	063521070910	**MSN2017**
1.6 Natural Power	182 B6.000	76	01/2003 → 09/2005		1,1	12	063521070910	**MSN2017**
1.9 D (223AXB1A)	223 A6.000	46	03/2001 → 12/2005		1,8	12	063113003010	**MSN824**
1.9 D (223AXB1A)	223 A6.000	46	03/2001 → 09/2005		1,7	12	063521082040	**MSN2001**
1.9 JTD (223AXE1A)	182 B9.000, 223 B2.000	74	10/2001 →		1,8	12	063113002010	**MSN816**
DOBLO (152)								
1.4		70	02/2010 →		1,0	12	063280060010	**MSN8060**
1.6 D 16V Multijet	263 A4.000	66	02/2010 →		1,4	12	063521082390	**MSN2119**
1.6 D Multijet	198 A3.000	77	02/2010 →		1,4	12	063521082390	**MSN2119**
DOBLO Cargo (223)								
1.2 (223ZXA1A)	223 A5.000	48	03/2001 → 12/2005		0,9	12	063102021010	**MSN402**
1.3 JTD 16V	188 A9.000	51	05/2004 → 12/2005		1,3	12	063280045010	**MSN8045**

		kW			kW	V	LONG	SHORT
FIAT								
DOBLO Cargo (223)								
1.6 16V (223ZXD1A)	182 B6.000	76	10/2001 →		0,9	12	063223101010	**MSN274**
1.6 16V (223ZXD1A)	182 B6.000	76	10/2001 → 09/2005		1,1	12	063521070910	**MSN2017**
1.6 Natural Power	182 B6.000	76	01/2003 → 09/2005		1,1	12	063521070910	**MSN2017**
1.9 D (223ZXB1A)	223 A6.000	46	01/2004 → 12/2005		1,8	12	063113003010	**MSN824**
1.9 D (223ZXB1A)	223 A6.000	46	03/2001 → 09/2005		1,7	12	063521082040	**MSN2001**
1.9 JTD	223 A7.000, 223 B1.000	77	01/2004 → 08/2005		1,3	12	063280045010	**MSN8045**
DOBLO Cargo (263)								
1.6 D Multijet	198 A3.000	77	02/2010 →		1,4	12	063521082390	**MSN2119**
1.6 D Multijet	263 A3.000	74	02/2010 →		1,4	12	063521082390	**MSN2119**
1.6 D Multijet	263 A4.000	66	02/2010 →		1,4	12	063521082390	**MSN2119**
DOBLO Cargo Pianale piatto/Telaio (263)								
1.6 D Multijet	198 A3.000	77	02/2010 →		1,4	12	063521082390	**MSN2119**
DUCATO Autobus (230)								
2.0 4x4	RFW	80	11/1994 → 11/2001		1,1	12	063521070630	**MSN2015**
2.0 4x4	RFW	80	08/1999 → 11/2001		1,4	12	063521081760	**MSN2079**
2.0 Panorama/Combinato	RFW	80	03/1994 → 03/2002		1,1	12	063521070630	**MSN2015**
2.0 Panorama/Combinato	RFW	80	08/1999 → 03/2002		1,4	12	063521081760	**MSN2079**
2.5 TDI 4x4	8140.47	85	04/1997 → 04/2002		2,6	12	063114014010	**MSN801**
2.5 TDI Combinato	8140.47R	80	01/1997 → 04/2002		2,6	12	063114014010	**MSN801**
2.5 TDI Panorama/Combinato	8140.47	85	01/1997 → 04/2002		2,6	12	063114014010	**MSN801**
2.5 TDI Panorama/Combinato	8140.47R	80	01/1997 → 04/2002		2,6	12	063114014010	**MSN801**
2.8 D	8140.63	64	04/2000 → 03/2002		2,3	12	063522230130	**MSN2006**
2.8 JTD	8140.43S	94	11/2000 → 03/2002		2,3	12	063522230130	**MSN2006**
2.8 JTD 4x4	8140.43S	94	11/2000 → 03/2002		2,3	12	063522230130	**MSN2006**
2.8 TDI	8140.43	90	05/1998 → 09/2001		2,6	12	063114014010	**MSN801**
2.8 TDI	8140.43	90	04/2000 → 02/2002		2,3	12	063522230130	**MSN2006**
2.8 TDI 4x4	8140.43	90	07/1999 → 04/2002		2,6	12	063114014010	**MSN801**
2.8 TDI 4x4	8140.43	90	04/2000 → 02/2002		2,3	12	063522230130	**MSN2006**
DUCATO Autobus (244, Z_)								
2.0	RFL	81	04/2002 → 08/2006		1,1	12	063521070630	**MSN2015**
2.0	RFL	81	04/2002 → 08/2006		1,4	12	063521081760	**MSN2079**
2.0 Bipower	RFL	81	11/2002 → 08/2006		1,1	12	063521070630	**MSN2015**
2.0 JTD	RHV (DW10)	62	04/2002 → 08/2006		1,4	12	063521084000	**MSN2083**
2.3 JTD	F1AE0481C	81	04/2002 → 08/2006		2,5	12	063521093000	**MSN2026**
2.3 JTD	F1AE0481C	81	04/2002 → 08/2006		2,3	12	063522230130	**MSN2006**
2.8 JTD	8140.43S	94	04/2002 → 08/2006		2,5	12	063521093000	**MSN2026**
2.8 JTD	8140.43S	94	04/2002 → 08/2006		2,3	12	063522230130	**MSN2006**
2.8 JTD 4x4	8140.43S	94	07/2002 → 08/2006		2,5	12	063521093000	**MSN2026**
2.8 JTD 4x4	8140.43S	94	07/2002 → 08/2006		2,3	12	063522230130	**MSN2006**
DUCATO Furgonato (230L)								
2.0	RFW	80	03/1994 → 03/2002		1,1	12	063521070630	**MSN2015**
2.0	RFW	80	08/1999 → 03/2002		1,4	12	063521081760	**MSN2079**
2.5 TDI	8140.47R	80	01/1997 → 04/2002		2,6	12	063114014010	**MSN801**
2.5 TDI 4x4	8140.47	85	05/1998 → 04/2002		2,6	12	063114014010	**MSN801**

		kW			kW	V	LONG	SHORT
FIAT								
DUCATO Furgonato (230L)								
2.5 TDI Maxi	8140.47	85	03/1994 → 08/1998		2,6	12	063114014010	**MSN801**
2.8 D	8140.63	64	04/2000 → 02/2002		2,3	12	063522230130	**MSN2006**
2.8 D 4x4	8140.63	64	04/2000 → 02/2002		2,3	12	063522230130	**MSN2006**
2.8 iDTD 4x4	8140.43	90	04/2000 → 09/2001		2,3	12	063522230130	**MSN2006**
2.8 JTD	8140.43S	94	11/2000 → 03/2002		2,3	12	063522230130	**MSN2006**
2.8 JTD 4x4	8140.43S	94	11/2000 → 03/2002		2,3	12	063522230130	**MSN2006**
2.8 TDI	8140.43	90	05/1998 → 09/2001		2,6	12	063114014010	**MSN801**
2.8 TDI	8140.43	90	04/2000 → 02/2002		2,3	12	063522230130	**MSN2006**
2.8 TDI 4x4	8140.43	90	06/1999 → 04/2002		2,6	12	063114014010	**MSN801**
2.8 TDI 4x4	8140.43	90	04/2000 → 02/2002		2,3	12	063522230130	**MSN2006**
DUCATO Furgonato (244)								
2.0	RFL	81	04/2002 → 08/2006		1,1	12	063521070630	**MSN2015**
2.0	RFL	81	04/2002 → 08/2006		1,4	12	063521081760	**MSN2079**
2.0 Bipower	RFL	81	11/2002 → 08/2006		1,1	12	063521070630	**MSN2015**
2.0 Bipower	RFL	81	11/2002 → 08/2006		1,4	12	063521081760	**MSN2079**
2.0 JTD	RHV (DW10)	62	04/2002 → 08/2006		1,4	12	063521084000	**MSN2083**
2.3 JTD	F1AE0481C	81	04/2002 → 08/2006		2,5	12	063521093000	**MSN2026**
2.3 JTD	F1AE0481C	81	04/2002 → 08/2006		2,3	12	063522230130	**MSN2006**
2.8 JTD	8140.43S	94	04/2002 → 08/2006		2,5	12	063521093000	**MSN2026**
2.8 JTD	8140.43S	94	04/2002 → 08/2006		2,3	12	063522230130	**MSN2006**
2.8 JTD 4x4	8140.43S	94	07/2002 → 08/2006		2,5	12	063521093000	**MSN2026**
2.8 JTD 4x4	8140.43S	94	07/2002 → 08/2006		2,3	12	063522230130	**MSN2006**
2.8 JTD Power	8140.43N	107	08/2004 → 08/2006		2,5	12	063521093000	**MSN2026**
2.8 JTD Power	8140.43N	107	05/2004 → 08/2006		2,3	12	063522230130	**MSN2006**
DUCATO Furgonato (280)								
2.0	170 B	55	07/1985 → 08/1990		2,5	12	063217154010	**MSN230**
2.4 D	8144.61	53	01/1982 → 12/1985		2,5	12	063217154010	**MSN230**
2.5 D	8144.67, CRD93L (U25-661)	55	01/1982 → 08/1990		2,5	12	063217154010	**MSN230**
2.5 D 4x4	8144.67	55	03/1989 → 08/1990		2,5	12	063217154010	**MSN230**
DUCATO Furgonato (290)								
2.5 D 4x4	8144.67	55	07/1990 → 03/1994		2,5	12	063217154010	**MSN230**
DUCATO Panorama (280)								
1.9 D	149 B1.000	52	02/1987 → 08/1990		2,5	12	063217154010	**MSN230**
2.0	170 B	55	01/1986 → 08/1990		2,5	12	063217154010	**MSN230**
2.4 D	8144.61	53	07/1982 → 12/1985		2,5	12	063217154010	**MSN230**
2.5 D	8144.67, CRD93L (U25-661)	55	01/1986 → 08/1990		2,5	12	063217154010	**MSN230**
2.5 D 4x4	8144.67	55	01/1987 → 08/1990		2,5	12	063217154010	**MSN230**
DUCATO Panorama (290)								
2.5 D	8144.67	55	07/1990 → 03/1994		2,5	12	063217154010	**MSN230**
2.5 D 4x4	8144.67	55	07/1990 → 03/1994		2,5	12	063217154010	**MSN230**
DUCATO Pianale piatto/Telaio (230)								
2.0	RFW	80	06/1998 → 03/2002		1,1	12	063521070630	**MSN2015**

		kW			kW	V	LONG	SHORT
FIAT								
DUCATO Pianale piatto/Telaio (230)								
2.0	RFW	80	08/1999 → 03/2002		1,4	12	063521081760	**MSN2079**
2.0 4x4		80	06/1998 → 03/2002		1,1	12	063521070630	**MSN2015**
2.0 4x4		80	08/1999 → 03/2002		1,4	12	063521081760	**MSN2079**
2.5 TDI	8140.47	85	01/1997 → 04/2002		2,6	12	063114014010	**MSN801**
2.5 TDI	8140.47R	80	01/1997 → 04/2002		2,6	12	063114014010	**MSN801**
2.5 TDI 4x4	8140.47	85	06/1998 → 04/2002		2,6	12	063114014010	**MSN801**
2.8 D	8140.63	64	04/2000 → 02/2002		2,3	12	063522230130	**MSN2006**
2.8 iDTD 4x4	8140.43	90	04/2000 → 09/2001		2,3	12	063522230130	**MSN2006**
2.8 JTD	8140.43S	94	11/2000 → 03/2002		2,3	12	063522230130	**MSN2006**
2.8 TDI	8140.43	90	04/2000 → 03/2002		2,3	12	063522230130	**MSN2006**
DUCATO Pianale piatto/Telaio (244)								
2.0 JTD	RHV (DW10)	62	04/2002 → 08/2006		1,4	12	063521084000	**MSN2083**
2.3 JTD	F1AE0481C	81	04/2002 → 08/2006		2,5	12	063521093000	**MSN2026**
2.3 JTD	F1AE0481C	81	04/2002 → 08/2006		2,3	12	063522230130	**MSN2006**
2.8 JTD	8140.43	90	11/2003 → 07/2006		2,5	12	063521093000	**MSN2026**
2.8 JTD	8140.43	90	11/2003 → 07/2006		2,3	12	063522230130	**MSN2006**
2.8 JTD	8140.43S	94	04/2002 → 08/2006		2,5	12	063521093000	**MSN2026**
2.8 JTD	8140.43S	94	04/2002 → 08/2006		2,3	12	063522230130	**MSN2006**
2.8 JTD 4x4	8140.43S	94	10/2002 → 08/2006		2,5	12	063521093000	**MSN2026**
2.8 JTD 4x4	8140.43S	94	10/2002 →		2,3	12	063522230130	**MSN2006**
2.8 JTD Power	8140.43N	107	05/2004 → 08/2006		2,5	12	063521093000	**MSN2026**
2.8 JTD Power	8140.43N	107	05/2004 → 08/2006		2,3	12	063522230130	**MSN2006**
DUCATO Pianale piatto/Telaio (280)								
1.9 D	149 B1.000	52	01/1988 → 08/1990		2,5	12	063217154010	**MSN230**
2.5 D	8144.67, CRD93L (U25-661)	55	07/1982 → 08/1990		2,5	12	063217154010	**MSN230**
2.5 D 4x4	8144.67	55	03/1989 → 08/1990		2,5	12	063217154010	**MSN230**
DUCATO Pianale piatto/Telaio (290)								
2.5 D	8144.67	55	07/1990 → 03/1994		2,5	12	063217154010	**MSN230**
2.5 D 4x4	8144.67	55	07/1990 → 03/1994		2,5	12	063217154010	**MSN230**
DUNA (146 B)								
DS 1.7	149 B3.000	44	01/1987 → 12/1990		1,7	12	063521100250	**MSN2027**
DUNA Weekend (146 B)								
DS 1.7	149 B3.000	44	01/1987 → 12/1991		1,4	12	063111007010	**MSN807**
DS 1.7	149 B3.000	44	01/1987 → 12/1990		1,7	12	063521100250	**MSN2027**
ELBA (146_)								
1.6		69	01/1994 → 12/1996		0,9	12	063223085010	**MSN520**
FIORINO (127)								
900	100 GL.000	33	10/1977 → 12/1981		0,8	12	063222908010	**MSN290**
FIORINO (147)								
1.5	149 C1.000	55	01/1988 → 08/1993		0,9	12	063223101010	**MSN274**
1.7 Diesel	149 B2.000	42	01/1988 → 03/1992		1,7	12	063521100250	**MSN2027**
1.7 Diesel	149 B3.000	44	01/1988 → 12/1990		1,7	12	063521100250	**MSN2027**
FIORINO Cassone / Furgonato / Promiscuo								
1.3 D Multijet	199 A2.000, 199 A9.000	55	02/2008 →		1,3	12	063280045010	**MSN8045**

		kW		i	kW	V	LONG	SHORT
FIAT								
FIORINO Cassone / Furgonato / Promiscuo								
1.4	KFT, KFV	54	02/2008 →		1,0	12	063521120410	**MSN2029**
FIORINO Furgonato (146 Uno)								
1.7 D	146 B2.000	44	06/1999 → 10/1999		1,6	12	063112003010	**MSN209**
1.7 D	146 B2.000	44	06/1999 → 10/1999		1,8	12	063521090180	**MSN2084**
1.7 D	146 B2.000	44	01/1988 → 12/1990		1,7	12	063521100250	**MSN2027**
1.7 D	146 B2.000	44	04/1992 → 05/1999		1,7	12	063521101250	**MSN2003**
60 1.7 D	146 B2.000	42	05/1988 → 03/1992		1,7	12	063521100250	**MSN2027**
60 1.7 D	146 B2.000	42	05/1988 → 03/1992		1,7	12	063521101250	**MSN2003**
60 1.7 D	149 B3.000	44	05/1988 → 12/1990		1,7	12	063521100250	**MSN2027**
65 1.7 TD	146 D7.000	46	06/1999 → 05/2001		1,6	12	063112003010	**MSN209**
65 1.7 TD	146 D7.000	46	06/1999 → 05/2001		1,8	12	063521090180	**MSN2084**
65 1.7 TD	146 D7.000	46	02/1997 → 05/1999		1,7	12	063521101250	**MSN2003**
70 i.e. 1.4	146 C5.000, 146 D5.000	49	01/1993 → 05/2001		0,9	12	063223101010	**MSN274**
75 i.e. 1.5	149 C1.000	55	05/1988 → 12/1993		0,9	12	063223101010	**MSN274**
75 i.e. 1.6	146 C6.000, 146 D6.000	55	10/1993 → 05/2001		0,9	12	063223101010	**MSN274**
FIORINO Pick up (146)								
1.4	146 D5.000	49	02/1998 → 12/1998		0,9	12	063223085010	**MSN520**
1.6	146 C6.000, 146 D6.000	55	01/1994 → 12/1995		0,9	12	063223101010	**MSN274**
1.7 D	146 B2.000	42	06/1999 → 10/1999		1,6	12	063112003010	**MSN209**
1.7 D	146 B2.000	42	06/1999 → 10/1999		1,8	12	063521090180	**MSN2084**
1.7 D	146 B2.000	42	10/1993 → 05/1999		1,7	12	063521101250	**MSN2003**
1.7 D	149 B3.000	44	05/1988 → 12/1990		1,7	12	063521100250	**MSN2027**
1.7 TD	146 D7.000	46	01/1997 → 05/2001		1,6	12	063112003010	**MSN209**
1.7 TD	146 D7.000	46	06/1999 → 05/2001		1,8	12	063521090180	**MSN2084**
1.7 TD	146 D7.000	46	02/1997 → 05/1999		1,7	12	063521101250	**MSN2003**
IDEA								
1.2 16V	188 A5.000	59	01/2004 →		0,9	12	063102022010	**MSN418**
1.2 16V	188 A5.000	59	02/2005 →		0,8	12	063520003200	**MSN2116**
1.2 16V		59	11/2010 →		1,0	12	063280060010	**MSN8060**
1.3 D Multijet	199 A3.000	66	10/2005 →		1,3	12	063280045010	**MSN8045**
1.3 JTD	188 A9.000	51	01/2004 →		1,3	12	063280045010	**MSN8045**
1.4 LPG		57	03/2009 →		1,0	12	063280061010	**MSN8061**
LINEA								
1.3 D Multijet	199 A3.000	66	07/2007 →		1,3	12	063280045010	**MSN8045**
1.4		57	11/2010 →		1,0	12	063280060010	**MSN8060**
1.4 T-Jet		88	11/2010 →		1,0	12	063280060010	**MSN8060**
MAREA (185)								
1.2 16V	182 B2.000	60	01/1999 →		0,8	12	063101015010	**MSN829**
1.2 16V	182 B2.000	60	10/1998 →		0,9	12	063102018010	**MSN923**
1.4 80 12V	182 A3.000	59	09/1996 → 02/1999		0,8	12	063102003010	**MSN603**
1.6	182 B6.000	76	09/2000 → 08/2002		1,1	12	063521070910	**MSN2017**
1.6 100 16V	182 A4.000	76	09/1996 → 08/2000		1,0	12	063103022010	**MSN924**

		kW			kW	V	LONG	SHORT
FIAT								
MAREA (185)								
1.6 100 16V	182 A4.000	76	09/1996 →		1,4	12	063111007010	**MSN807**
1.6 100 16V	182 A4.000	76	01/2001 →		1,4	12	063111033010	**MSN405**
1.6 100 16V	182 A4.000	76	09/1996 →		0,9	12	063223101010	**MSN274**
1.6 100 16V	182 A4.000	76	03/1999 → 09/2002		1,1	12	063521070910	**MSN2017**
1.6 100 16V Bipower	185 A3.000, 186 A4.000	76	04/1999 →		1,0	12	063103022010	**MSN924**
1.6 100 16V Bipower	185 A3.000, 186 A4.000	76	04/1999 →		0,9	12	063223101010	**MSN274**
1.6 100 16V Bipower	185 A3.000, 186 A4.000	76	11/1999 → 09/2002		1,1	12	063521070910	**MSN2017**
1.6 16V	185 A3.000	75	04/1997 → 02/1999		0,9	12	063223101010	**MSN274**
1.8 115 16V	182 A2.000	83	09/1996 → 08/2000		1,0	12	063103022010	**MSN924**
1.8 115 16V	182 A2.000	83	09/1996 → 08/2000		1,4	12	063111007010	**MSN807**
1.8 115 16V	182 A2.000	83	10/1996 → 09/2002		1,1	12	063521070660	**MSN2069**
1.9 JTD 105	182 B4.000	77	04/1999 → 01/2001		1,8	12	063113002010	**MSN816**
1.9 JTD 110	186 A6.000	81	01/2001 →		1,8	12	063113002010	**MSN816**
2.0 150 20V	182 A1.000	108	09/1996 → 04/1999		1,4	12	063111007010	**MSN807**
2.0 150 20V	182 A1.000	108	10/1996 → 02/1999		1,1	12	063521070660	**MSN2069**
2.0 150 20V	185 A8.000	110	01/2001 →		1,4	12	063111007010	**MSN807**
2.0 150 20V	185 A8.000	110	01/2001 →		1,1	12	063521070660	**MSN2069**
2.0 155 20V	182 B7.000	113	04/1999 → 08/2000		1,4	12	063111007010	**MSN807**
2.0 155 20V	182 B7.000	113	04/1999 → 01/2001		1,1	12	063521070660	**MSN2069**
2.4 JTD 130	185 A6.000, 839 A5.000	96	04/1999 → 09/2002		2,2	12	063521092680	**MSN2085**
MAREA Weekend (185)								
1.2 16V	182 B2.000	60	01/1999 →		0,8	12	063101015010	**MSN829**
1.2 16V	182 B2.000	60	10/1998 →		0,9	12	063102018010	**MSN923**
1.4 80 12V	182 A3.000	59	09/1996 → 02/1999		0,8	12	063102003010	**MSN603**
1.6	182 B6.000	76	09/2001 → 08/2002		1,1	12	063521070910	**MSN2017**
1.6 100 16V	182 A4.000	76	09/1996 → 08/2000		1,0	12	063103022010	**MSN924**
1.6 100 16V	182 A4.000	76	09/1996 →		1,4	12	063111007010	**MSN807**
1.6 100 16V	182 A4.000	76	01/2001 →		1,4	12	063111033010	**MSN405**
1.6 100 16V	182 A4.000	76	09/1996 → 08/2000		0,9	12	063223085010	**MSN520**
1.6 100 16V	182 A4.000	76	09/1996 →		0,9	12	063223101010	**MSN274**
1.6 100 16V	182 A4.000	76	03/1999 → 03/2002		1,1	12	063521070910	**MSN2017**
1.8 115 16V	182 A2.000	83	09/1996 → 08/2000		1,0	12	063103022010	**MSN924**
1.8 115 16V	182 A2.000	83	09/1996 → 08/2000		1,4	12	063111007010	**MSN807**
1.8 115 16V	182 A2.000	83	10/1996 → 09/2002		1,1	12	063521070660	**MSN2069**
1.9 JTD 105	182 B4.000	77	04/1999 →		1,8	12	063113002010	**MSN816**
1.9 JTD 110	186 A6.000	81	01/2001 →		1,8	12	063113002010	**MSN816**
2.0 150 20V	182 A1.000	108	09/1996 → 04/1999		1,4	12	063111007010	**MSN807**
2.0 150 20V	182 A1.000	108	10/1996 → 02/1999		1,1	12	063521070660	**MSN2069**
2.0 150 20V	185 A8.000	110	01/2001 →		1,4	12	063111007010	**MSN807**
2.0 150 20V	185 A8.000	110	01/2001 →		1,1	12	063521070660	**MSN2069**
2.0 155 20V	182 B7.000	113	04/1999 → 01/2001		1,1	12	063521070660	**MSN2069**
2.4 JTD 130	185 A6.000, 839 A5.000	96	04/1999 → 08/2000		1,4	12	063111007010	**MSN807**
2.4 JTD 130	185 A6.000, 839 A5.000	96	04/1999 → 09/2002		2,2	12	063521092680	**MSN2085**

		kW		i	kW	V	LONG	SHORT
FIAT								
MULTIPLA (186)								
1.6	182 B6.000	74	03/2001 → 08/2005		1,1	12	063521070910	**MSN2017**
1.6	182 B6.000	76	09/2000 → 02/2001		1,1	12	063521070910	**MSN2017**
1.6 100 16V (186AXA1A)	182 A4.000	76	04/1999 →		1,1	12	063521070910	**MSN2017**
1.6 16V (186AGB1A)	182 B6.000	70	04/2002 → 12/2010		1,1	12	063521070910	**MSN2017**
1.6 16V Bipower (186AM-B1A)	186 A4.000	76	04/1999 → 03/2002		1,1	12	063521070910	**MSN2017**
1.6 16V Bipower (186AXC1A)	182 B6.000	76	10/2001 → 12/2010		1,1	12	063521070910	**MSN2017**
1.6 16V Blupower (186AMA1A)	186 A3.000	70	04/1999 → 03/2002		1,1	12	063521070910	**MSN2017**
1.9 JTD 105 (186AXB1A)	182 B4.000	77	04/1999 →		1,8	12	063113002010	**MSN816**
1.9 JTD 110	186 A6.000	81	03/2001 → 07/2002		1,8	12	063113002010	**MSN816**
1.9 JTD 115	186 A8.000	85	07/2002 →		1,8	12	063113002010	**MSN816**
PALIO (178BX)								
1.0		56	04/1996 →		0,8	12	063101023010	**MSN410**
1.1		40	08/2000 → 07/2001		0,9	12	063102018010	**MSN923**
1.1		40	08/2000 → 07/2001		0,8	12	063521130060	**MSN2091**
1.2	176 A8.000, 178 B5.000, 178 E2.000	54	06/1998 →		0,8	12	063101018010	**MSN400**
1.2	188 A5.000	59	09/2001 →		1,0	12	063103022010	**MSN924**
1.3 JTD Multijet	188 A9.000	51	06/2003 →		1,3	12	063280045010	**MSN8045**
1.4	178 B2.000	51	04/1996 →		0,9	12	063102022010	**MSN418**
1.4	178 B2.000	51	04/1996 →	MAN C513 ;	1,0	12	063103022010	**MSN924**
1.4	178 B2.000	51	04/1996 →	MAN C514 ;	1,0	12	063103025010	**MSN927**
1.4		57	10/2005 →		1,0	12	063280060010	**MSN8060**
1.4		60	04/2005 →		1,0	12	063280060010	**MSN8060**
1.4		63	11/2009 →		1,0	12	063280060010	**MSN8060**
1.4 Cat.	178 B2.016	51	04/1996 →	MAN C513 ;	1,0	12	063103022010	**MSN924**
1.4 Cat.	178 B2.016	51	04/1996 →	MAN C514 ;	1,0	12	063103025010	**MSN927**
1.4 Cat.	178 B2.016	51	01/1998 →		0,9	12	063223085010	**MSN520**
1.6 16V	178 B3.000	74	04/1996 → 10/2002		1,0	12	063103022010	**MSN924**
1.6 16V	178 B3.000	74	01/2001 →		1,4	12	063111033010	**MSN405**
1.6 16V	178 B3.000	74	04/1996 →		0,9	12	063223101010	**MSN274**
1.9 D	223 A6.000	46	09/2000 →		1,8	12	063113003010	**MSN824**
PALIO Weekend (178DX)								
1.2 (178DX.G1A)	178 B5.000	54	04/1996 → 02/2001		0,8	12	063101018010	**MSN400**

		kW		i	kW	V	LONG	SHORT
FIAT								
PALIO Weekend (178DX)								
1.2 (178DX.G1A)	178 B5.000	54	11/1999 → 02/2001		1,0	12	063103025010	**MSN927**
1.2 (178DYA1A)	178 C4.066, 188 A4.000	44	02/2001 →		0,8	12	063101018010	**MSN400**
1.2 (178DYA1A)	178 C4.066, 188 A4.000	44	03/2001 → 10/2004		1,0	12	063103022010	**MSN924**
1.2 (178DYA1A)	178 C4.066, 188 A4.000	44	02/2001 →		1,0	12	063103025010	**MSN927**
1.4	178 B2.000	51	07/1997 → 08/2001		1,0	12	063103022010	**MSN924**
1.6	178 C7.098, 178 D2..011	68	07/1997 → 10/2003		1,0	12	063103022010	**MSN924**
1.6 16V (178DX.D1A)	178 B3.000	74	07/1997 → 02/2001		1,0	12	063103022010	**MSN924**
1.6 16V (178DX.D1A)	178 B3.000	74	04/1996 → 02/2001		0,9	12	063223101010	**MSN274**
1.6 16V (178DYC1A06)	182 B6.000	76	02/2001 →		1,4	12	063111033010	**MSN405**
1.6 16V (178DYC1A06)	182 B6.000	76	02/2001 →		0,9	12	063223101010	**MSN274**
1.7 TD (178DX.H1A)	176 A3.000	51	09/1997 → 10/2000		1,6	12	063112003010	**MSN209**
1.7 TD (178DX.H1A)	176 A3.000	51	09/1997 → 10/2000		1,8	12	063521090180	**MSN2084**
1.9 D (178DYD1A07)	223 A6.000	46	03/2001 →		1,8	12	063113003010	**MSN824**
1.9 D (178DYD1A07)	223 A6.000	46	03/2001 → 09/2001		1,7	12	063521082040	**MSN2001**
PANDA (141A_)								
750 (141AA)	156 A4.000	25	01/1986 → 01/1995		0,8	12	063222908010	**MSN290**
750 (141AI)	141 B.000	25	01/1986 → 01/1995		0,8	12	063222908010	**MSN290**
750 (141AM) Cat.	156 A4.048	25	01/1995 → 12/1997		0,8	12	063222908010	**MSN290**
800		25	02/1981 → 12/1985		0,8	12	063222908010	**MSN290**
900	1170 A1.046	29	04/1992 → 12/1996		0,8	12	063222908010	**MSN290**
900	100 GL3.000, 146 A.000	33	09/1982 → 12/1985		0,8	12	063222908010	**MSN290**
950 4x4	A 112 B1.054	35	10/1984 → 09/1985		0,8	12	063222908010	**MSN290**
1000	156 A2.100	32	03/1989 → 06/1990		0,8	12	063101023010	**MSN410**
1000	156 A3.000	37	09/1986 → 06/1990		0,8	12	063101023010	**MSN410**
1000	156 A3.000	37	05/1986 → 04/1991		0,8	12	063222908010	**MSN290**
1000 4x4	141 C2.000, 156 A2.246	33	09/1986 → 04/1992		0,8	12	063101023010	**MSN410**
1000 4x4	156 A2.100, 156 A3.100	32	03/1989 → 07/1989		0,8	12	063101023010	**MSN410**
1000 4x4	156 A3.000	37	09/1986 → 12/1992		0,8	12	063101023010	**MSN410**
1000 i.e. Cat.	141 C2.000, 156 A2.246	33	07/1990 → 09/1995		0,8	12	063101023010	**MSN410**
1100	156 C.046	37	01/1993 → 09/1995		0,8	12	063101023010	**MSN410**
1100	176 B2.000, 187 A1.000	40	02/1995 → 08/2000		0,8	12	063101023010	**MSN410**
1100 4x4	176 B2.000	40	02/1995 → 09/1995		0,8	12	063101023010	**MSN410**
1100 Trekking 4x4	156 C.046	37	03/1992 → 12/1994		0,8	12	063101023010	**MSN410**
PANDA (169)								
1.1	187 A1.000	40	09/2003 →	⎈	0,9	12	063102021010	**MSN402**
1.1	187 A1.000	40	09/2003 →	⎈	0,9	12	063102022010	**MSN418**
1.1	187 A1.000	40	03/2005 → 12/2009		0,8	12	063520003200	**MSN2116**
1.1		40	09/2003 →		1,0	12	063280060010	**MSN8060**
1.2	188 A4.000	44	09/2003 →		0,9	12	063102022010	**MSN418**
1.2	188 A4.000	44	03/2005 → 12/2009		0,8	12	063520003200	**MSN2116**
1.2		51	03/2010 →		1,0	12	063280060010	**MSN8060**
1.2 4x4	188 A4.000	44	10/2004 →		0,9	12	063102022010	**MSN418**
1.2 4x4	188 A4.000	44	03/2005 → 12/2009		0,8	12	063520003200	**MSN2116**

		kW		i	kW	V	LONG	SHORT
FIAT								
PANDA (169)								
1.2 Bi-Power / Natural Power	188 A4.000	44	06/2007 →		0,9	12	063102022010	**MSN418**
1.2 Bi-Power / Natural Power	188 A4.000	44	03/2005 → 12/2009		0,8	12	063520003200	**MSN2116**
1.2 LPG		51	11/2010 →		1,0	12	063280061010	**MSN8061**
1.3 D Multijet	169 A1.000	55	06/2007 → 09/2009		1,3	12	063280045010	**MSN8045**
1.3 D Multijet	188 A9.000	51	09/2003 →		1,3	12	063280045010	**MSN8045**
1.3 D Multijet 4x4	188 A9.000	51	10/2004 →		1,3	12	063280045010	**MSN8045**
1.4 Bi-Power / Natural Power		57	09/2010 →		1,0	12	063280061010	**MSN8061**
PANDA Van (141_)								
750	141 B.000	25	01/1986 → 12/1991		0,8	12	063222908010	**MSN290**
1000	156 A2.100, 156 A3.100	32	03/1989 → 06/1990		0,8	12	063101023010	**MSN410**
1000 i.e	156 A2.246	33	08/1992 → 09/1995		0,8	12	063101023010	**MSN410**
1.2	188 A4.000	44	09/2004 →		0,9	12	063102022010	**MSN418**
1.2	188 A4.000	44	03/2005 →		0,8	12	063520003200	**MSN2116**
1.2 4x4	188 A4.000	44	03/2005 →		0,8	12	063520003200	**MSN2116**
1.3 JTD	169 A1.000	55	01/2006 →		1,3	12	063280045010	**MSN8045**
1.3 JTD	188 A9.000	51	03/2004 →		1,3	12	063280045010	**MSN8045**
PENNY VAN (257)								
1.7 D	149 B3.000	44	10/1986 → 12/1990		1,7	12	063521100250	**MSN2027**
PUNTO (176)								
1.4 GT Turbo	176 A4.000	98	01/1994 → 09/1996		0,9	12	063223101010	**MSN274**
1.4 GT Turbo	176 B6.000	96	09/1996 → 09/1999		0,9	12	063223101010	**MSN274**
1.7 D	176 B3.000	42	04/1994 → 12/1996		1,6	12	063112003010	**MSN209**
1.7 D	176 B3.000	42	12/1996 → 04/1997		1,8	12	063521090180	**MSN2084**
1.7 TD	176 A3.000	51	01/1994 → 04/1997		1,6	12	063112003010	**MSN209**
1.7 TD	176 A3.000	51	01/1994 → 12/1996		1,8	12	063521090180	**MSN2084**
1.7 TD	176 A5.000	52	01/1994 → 04/1997		1,6	12	063112003010	**MSN209**
1.7 TD	176 A5.000	52	01/1994 → 04/1997		1,8	12	063521090180	**MSN2084**
55 1.1	176 A6.000, 176 B2.000	40	09/1993 → 09/1999		0,8	12	063101015010	**MSN829**
55 1.1	176 A6.000, 176 B2.000	40	09/1993 → 08/1999		0,9	12	063102018010	**MSN923**
55 1.1	176 A6.000, 176 B2.000	40	09/1993 → 09/1999		0,9	12	063223085010	**MSN520**
55 1.1	176 A6.000, 176 B2.000	40	09/1993 → 08/1999		0,8	12	063521130060	**MSN2091**
60 1.2	176 A7.000	43	01/1994 → 09/1999		0,8	12	063101015010	**MSN829**
60 1.2	176 A7.000	43	01/1994 → 05/1994		0,9	12	063102018010	**MSN923**
60 1.2	176 A7.000	43	01/1994 → 05/1994		0,8	12	063521130060	**MSN2091**
60 1.2	176 B1.000, 176 B4.000	44	03/1994 → 09/1999		0,8	12	063101015010	**MSN829**
60 1.2	176 B1.000, 176 B4.000	44	06/1995 → 08/1999		0,9	12	063102018010	**MSN923**
60 1.2	176 B1.000, 176 B4.000	44	06/1995 → 08/1999		0,8	12	063521130060	**MSN2091**
60 TD 1.7	176 B7.000	46	09/1996 → 04/1997		1,6	12	063112003010	**MSN209**
60 TD 1.7	176 B7.000	46	05/1997 → 08/1999		1,8	12	063521090180	**MSN2084**
75 1.2	176 A8.000	54	01/1994 → 09/1999		0,8	12	063101015010	**MSN829**
75 1.2	176 A8.000	54	10/1993 → 08/1999		0,9	12	063102018010	**MSN923**

		kW			kW	V	LONG	SHORT
FIAT								
PUNTO (176)								
75 1.2	176 A8.000	54	05/1997 → 08/1999		0,8	12	063521130060	**MSN2091**
85 16V 1.2	176 B9.000	63	04/1997 → 09/1999		0,8	12	063101015010	**MSN829**
85 16V 1.2	176 B9.000	63	05/1997 → 08/1999		0,9	12	063102018010	**MSN923**
PUNTO (188)								
1.2 16V 80 (188.233, .235, .253, .255, .333, .353, .639, .63	188 A5.000	59	09/1999 →		0,8	12	063101018010	**MSN400**
1.2 16V 80 (188.233, .235, .253, .255, .333, .353, .639, .63	188 A5.000	59	09/1999 →		0,9	12	063102018010	**MSN923**
1.2 16V 80 (188.233, .235, .253, .255, .333, .353, .639, .63	188 A5.000	59	09/1999 →		1,0	12	063103025010	**MSN927**
1.2 16V 80 (188.233, .235, .253, .255, .333, .353, .639, .63		59	07/2005 →		1,0	12	063280062010	**MSN8062**
1.2 60 (188.030, .050, .130, .150, .230, .250)	188 A4.000	44	09/1999 →		0,8	12	063101015010	**MSN829**
1.2 60 (188.030, .050, .130, .150, .230, .250)	188 A4.000	44	01/2002 →		0,8	12	063101018010	**MSN400**
1.2 60 (188.030, .050, .130, .150, .230, .250)	188 A4.000	44	07/2003 →		0,9	12	063102018010	**MSN923**
1.2 60 (188.030, .050, .130, .150, .230, .250)	188 A4.000	44	09/1999 →		1,0	12	063103025010	**MSN927**
1.2 60 (188.030, .050, .130, .150, .230, .250)		44	07/2005 →		1,0	12	063280062010	**MSN8062**
1.2 Natural Power	188 A4.000	44	09/2003 →		0,8	12	063101018010	**MSN400**
1.2 Natural Power	188 A4.000	44	09/2003 →		0,9	12	063102018010	**MSN923**
1.2 Natural Power	188 A4.000	44	09/2003 → 02/2005		1,0	12	063103025010	**MSN927**
1.2 Natural Power		44	09/2003 →		1,0	12	063280062010	**MSN8062**
1.3 JTD 16V	188 A9.000	51	06/2003 →		1,3	12	063280045010	**MSN8045**
1.8 130 HGT (188.738, .718)	183 A1.000, 188 A6.000	96	09/1999 → 06/2003		1,4	12	063111007010	**MSN807**
1.8 130 HGT (188.738, .718)	183 A1.000, 188 A6.000	96	09/1999 → 06/2003		1,1	12	063521070660	**MSN2069**
1.8 130 HGT (188.738, .718)	183 A1.000, 188 A6.000	96	09/1999 →		1,1	12	063521074110	**MSN2076**
1.9 DS 60 (188.031, .051, .231, .251)	188 A3.000	44	09/1999 → 06/2003		1,8	12	063113003010	**MSN824**
1.9 DS 60 (188.031, .051, .231, .251)	188 A3.000	44	09/1999 → 06/2003		1,7	12	063521082040	**MSN2001**
1.9 JTD	188 A7.000	63	10/2001 →		1,8	12	063113002010	**MSN816**
1.9 JTD 80 (188.237, .257, .337, .357)	188 A2.000	59	09/1999 →		1,8	12	063113002010	**MSN816**
PUNTO / GRANDE PUNTO (199)								
1.2	199 A4.000	48	10/2005 →		0,9	12	063102021010	**MSN402**
1.2		51	09/2010 →		1,0	12	063280060010	**MSN8060**
1.2		48	10/2005 →		1,0	12	063280060010	**MSN8060**
1.2		50	09/2006 →		1,0	12	063280060010	**MSN8060**
1.3 D Multijet	199 A2.000	55	10/2005 → 07/2010		1,3	12	063280045010	**MSN8045**
1.3 D Multijet	199 A3.000	66	10/2005 → 01/2008		1,3	12	063280045010	**MSN8045**

		kW			kW	V	LONG	SHORT
FIAT								
PUNTO / GRANDE PUNTO (199)								
1.4		57	10/2005 →		1,0	12	063280060010	**MSN8060**
1.4		55	06/2006 →		1,0	12	063280060010	**MSN8060**
1.4 16V		70	10/2005 →		1,0	12	063280060010	**MSN8060**
1.4 16V		66	09/2006 →		1,0	12	063280060010	**MSN8060**
1.4 16V		112	09/2007 →		1,0	12	063280060010	**MSN8060**
1.4 Abarth		114	12/2007 →		1,0	12	063280060010	**MSN8060**
1.4 Abarth		132	12/2007 →		1,0	12	063280060010	**MSN8060**
1.4 LPG		57	12/2008 →		1,0	12	063280061010	**MSN8061**
1.4 Natural Power		57	07/2008 →		1,0	12	063280061010	**MSN8061**
1.4 T-Jet		88	09/2007 →		1,0	12	063280060010	**MSN8060**
PUNTO Cabriolet (176C)								
60 1.2	176 A7.000	43	04/1994 → 06/2000		0,8	12	063101015010	**MSN829**
60 1.2	176 A7.000	43	04/1994 → 04/1997		0,9	12	063102018010	**MSN923**
60 1.2	176 A7.000	43	04/1994 → 04/1997		0,8	12	063521130060	**MSN2091**
60 1.2	176 B1.000, 176 B4.000	44	05/1995 → 06/2000		0,8	12	063101015010	**MSN829**
60 1.2	176 B1.000, 176 B4.000	44	05/1997 → 08/1999		0,9	12	063102018010	**MSN923**
60 1.2	176 B1.000, 176 B4.000	44	05/1997 → 08/1999		0,8	12	063521130060	**MSN2091**
85 16V 1.2	176 B9.000	63	04/1997 → 12/1999		0,8	12	063101015010	**MSN829**
85 16V 1.2	176 B9.000	63	05/1997 → 08/1999		0,9	12	063102018010	**MSN923**
PUNTO EVO								
1.2		51	10/2009 →		1,0	12	063280060010	**MSN8060**
1.2		48	10/2009 →		1,0	12	063280060010	**MSN8060**
1.4		55	07/2009 →		1,0	12	063280060010	**MSN8060**
1.4		57	10/2009 →		1,0	12	063280060010	**MSN8060**
1.4 16V		77	10/2009 →		1,0	12	063280060010	**MSN8060**
1.4 16V		99	10/2009 →		1,0	12	063280060010	**MSN8060**
1.4 Abarth		120	10/2009 →		1,0	12	063280060010	**MSN8060**
1.4 Natural Power		57	10/2009 →		1,0	12	063280061010	**MSN8061**
1.6 D Multijet	955 A3.000	88	10/2009 →		1,4	12	063521082390	**MSN2119**
PUNTO Van (176L)								
1.1	176 B2.000	40	04/1996 → 02/2000		0,8	12	063101015010	**MSN829**
1.1	176 B2.000	40	04/1996 → 08/1999		0,9	12	063102018010	**MSN923**
1.1	176 B2.000	40	05/1997 → 08/1999		0,8	12	063521130060	**MSN2091**
1.7 D	176 B3.000	42	04/1996 → 04/1997		1,6	12	063112003010	**MSN209**
1.7 D	176 B3.000	42	04/1996 → 12/1996		1,8	12	063521090180	**MSN2084**
1.7 TD	176 A5.000	52	05/1997 → 08/1999		1,6	12	063112003010	**MSN209**
1.7 TD	176 A5.000	52	05/1997 → 08/1999		1,8	12	063521090180	**MSN2084**
PUNTO Van (188AX)								
1.2 60	188 A4.000	44	02/2000 →		0,8	12	063101015010	**MSN829**
1.2 60	188 A4.000	44	01/2002 →		0,8	12	063101018010	**MSN400**
1.2 60	188 A4.000	44	02/2000 → 06/2003		0,9	12	063102018010	**MSN923**
1.2 60	188 A4.000	44	02/2000 → 06/2003		0,8	12	063521130060	**MSN2091**
1.3 JTD	188 A9.000	51	07/2003 → 10/2005		1,3	12	063280045010	**MSN8045**
1.9 D 60	188 A3.000	44	02/2000 →		1,8	12	063113003010	**MSN824**

		kW			kW	V	LONG	SHORT
FIAT								
PUNTO Van (188AX)								
1.9 D 60	188 A3.000	44	02/2000	06/2003	1,7	12	063521082040	**MSN2001**
1.9 JTD	188 A7.000	63	02/2000 →		1,8	12	063113002010	**MSN816**
QUBO								
1.3 D Multijet	199 A2.000	55	09/2008 →		1,3	12	063280045010	**MSN8045**
1.4	KFT, KFV	54	09/2008 →		1,0	12	063521120410	**MSN2029**
REGATA (138)								
100 Super 1.6	149 A2.000, 149 A4.000	74	10/1983 →	12/1986	0,9	12	063223085010	**MSN520**
100 Super 1.6	149 A2.000, 149 A4.000	74	10/1983 →	05/1986	0,9	12	063223101010	**MSN274**
60 Diesel 1.7	138 B6.000	43	09/1983 →	12/1986	1,7	12	063521100250	**MSN2027**
60 Diesel 1.7	149 B3.000	44	09/1987 →	03/1989	1,7	12	063521100250	**MSN2027**
75 1.5	138 B3.048, 138 C3.048	55	12/1983 →	12/1987	0,9	12	063223101010	**MSN274**
75 i.e. 1.5	138 C2.048, 149 C1.000	55	07/1985 →	07/1989	0,9	12	063223101010	**MSN274**
85 1.5	149 A5.000	58	05/1985 →	12/1987	0,9	12	063223101010	**MSN274**
85 1.6	149 A.000	60	01/1984 →	12/1987	0,9	12	063223101010	**MSN274**
85 Super 1.5	138 B3.000	60	09/1983 →	04/1985	0,9	12	063223101010	**MSN274**
REGATA Weekend								
100 1.6 (RF)	149 A4.000	74	09/1984 →	12/1986	0,9	12	063223101010	**MSN274**
60 Diesel 1.7	149 B3.000	44	09/1987 →	03/1989	1,7	12	063521100250	**MSN2027**
75 1.5	138 B3.048, 138 C3.048	55	01/1985 →	07/1989	0,9	12	063223101010	**MSN274**
75 1.5 i.e. Cat.	138 C2.048	55	12/1986 →	12/1987	0,9	12	063223101010	**MSN274**
85 1.5	138 B3.000	60	01/1984 →	12/1987	0,9	12	063223101010	**MSN274**
RITMO Bertone Cabriolet								
100 1.6	138 AR.000	77	10/1985 →	12/1987	0,9	12	063223101010	**MSN274**
100 1.6	138 AR.048	74	10/1985 →	12/1987	0,9	12	063223085010	**MSN520**
85 1.5	138 A4.000	63	01/1981 →	04/1985	0,9	12	063223101010	**MSN274**
85 1.5	138 B3.000	60	03/1983 →	12/1985	0,9	12	063223101010	**MSN274**
RITMO I (138A)								
55 Diesel 1.7	138 A5.000	43	10/1979 →	09/1982	1,7	12	063521100250	**MSN2027**
55 Diesel 1.7	138 A5.000	40	10/1979 →	09/1982	1,7	12	063521100250	**MSN2027**
60 1.0	127 A6.000	44	09/1978 →	09/1982	0,9	12	063223101010	**MSN274**
75 1.5	138 A2.000, 138 C3.048	55	01/1981 →	09/1982	0,9	12	063223101010	**MSN274**
75 i.e. 1.5	138 C2.048, 149 C1.000	55	10/1985 →	05/1987	0,9	12	063223085010	**MSN520**
85 1.5	138 A4.000	63	01/1981 →	09/1982	0,9	12	063223101010	**MSN274**
90 i.e. 1.6	149 C2.000	66	05/1987 →	12/1987	0,9	12	063223101010	**MSN274**
RITMO II (138A)								
100 1.6	149 A4.000	74	01/1985 →	12/1987	0,9	12	063223101010	**MSN274**
60 Diesel 1.7	138 C.000, 149 B3.000	44	09/1987 →	12/1987	1,7	12	063521100250	**MSN2027**
60 Diesel 1.7	138 B6.000	43	10/1982 →	10/1985	1,7	12	063521100250	**MSN2027**
75 1.5 Cat.	138 C2.048, 149 C1.000	55	09/1985 →	12/1988	0,9	12	063223101010	**MSN274**
85 1.5	138 B3.000	60	01/1985 →	12/1987	0,9	12	063223101010	**MSN274**
85 1.5	149 A5.000	58	08/1985 →	05/1987	0,9	12	063223101010	**MSN274**
90 1.6 i.e.	138 AR.000	66	05/1987 →	12/1987	0,9	12	063223101010	**MSN274**
SCUDO (270_)								
2.0 D Multijet	RHK	88	01/2007 →		2,0	12	063280090010	**MSN8090**

		kW		i	kW	V	LONG	SHORT
FIAT								
SCUDO (270_)								
2.0 D Multijet	RHR	100	01/2007 →		2,0	12	063280090010	**MSN8090**
SCUDO Combinato (220P)								
1.6	220 A 2.000	58	02/1996 → 12/2003		0,9	12	063223085010	**MSN520**
1.6	220 A 2.000	58	02/1996 → 05/2000		0,9	12	063223101010	**MSN274**
SCUDO Furgonato (220L)								
1.6	220 A 2.000	58	02/1996 → 12/2003		0,9	12	063223085010	**MSN520**
1.6	220 A 2.000	58	02/1996 → 05/2000		0,9	12	063223101010	**MSN274**
SCUDO Furgonato (270_)								
2.0 D Multijet	RHK	88	01/2007 →		2,0	12	063280090010	**MSN8090**
2.0 D Multijet	RHR	100	01/2007 →		2,0	12	063280090010	**MSN8090**
SCUDO Pianale piatto/Telaio (270_)								
2.0 D Multijet	RHK	88	01/2007 →		2,0	12	063280090010	**MSN8090**
2.0 D Multijet	RHR	100	01/2007 →		2,0	12	063280090010	**MSN8090**
SEICENTO (187)								
0.9 (187AXA, 187AXA1A)	1170 A1.046	29	01/1998 → 02/2000		0,8	12	063222908010	**MSN290**
1.1 (187AXB, 187AXB1A)	176 B2.000, 187 A1.000	40	01/1998 →		0,8	12	063101015010	**MSN829**
1.1 (187AXB, 187AXB1A)	176 B2.000, 187 A1.000	40	01/1998 →		0,8	12	063101023010	**MSN410**
1.1 (187AXB, 187AXB1A)	176 B2.000, 187 A1.000	40	03/1998 → 12/2003		0,9	12	063102018010	**MSN923**
1.1 (187AXB, 187AXB1A)	176 B2.000, 187 A1.000	40	09/2000 →		0,9	12	063102021010	**MSN402**
1.1 (187AXB, 187AXB1A)	176 B2.000, 187 A1.000	40	10/1999 →		1,0	12	063103025010	**MSN927**
1.1 (187AXB, 187AXB1A)		40	03/2010 →		1,0	12	063280062010	**MSN8062**
SEICENTO Van (187)								
0.9 (187AXA)	1170 A1.046	29	06/1998 → 08/2000		0,8	12	063222908010	**MSN290**
1.1 (187CXB/C)	176 B2.000	40	01/1998 →		0,8	12	063101015010	**MSN829**
1.1 (187CXB/C)	176 B2.000	40	01/1998 →		0,8	12	063101023010	**MSN410**
1.1 (187CXB/C)	176 B2.000	40	01/1998 → 12/2002		0,9	12	063102021010	**MSN402**
1.1 (187CXB/C)	176 B2.000	40	03/1998 → 12/2003		0,8	12	063521130060	**MSN2091**
SIENA (178_)								
1.0		45	09/1998 →		0,8	12	063101023010	**MSN410**
1.2	178 B5.000	54	01/2000 →		0,8	12	063101015010	**MSN829**
1.2	178 B5.000	54	09/1998 →		0,8	12	063101023010	**MSN410**
1.2	188 A5.000	59	09/2001 →		1,0	12	063103025010	**MSN927**
1.3 JTD	188 A9.000	51	09/2003 →		1,3	12	063280045010	**MSN8045**
1.4	178 B2.000	51	07/1997 → 10/2003		1,0	12	063103022010	**MSN924**
1.4	178 B2.000	51	07/1997 → 10/2003		0,9	12	063223085010	**MSN520**
1.4	178 B2.000	51	04/1996 →		0,9	12	063223101010	**MSN274**
1.4 Cat.	178 B2.016	51	04/1996 →		1,0	12	063103025010	**MSN927**
1.4 Cat.	178 B2.016	51	07/1997 → 10/2003		0,9	12	063223085010	**MSN520**
1.4 Cat.	178 B2.016	51	05/1998 → 05/1999		0,9	12	063223101010	**MSN274**
1.6	182 B6.000	76	01/2002 →		1,0	12	063103022010	**MSN924**

		kW		i	kW	V	LONG	SHORT
FIAT								
SIENA (178_)								
1.6 16V	178 B3.000	78	09/1998 → 12/2001		1,0	12	063103022010	**MSN924**
1.6 16V	178 B3.000	78	01/2001 →		1,4	12	063111033010	**MSN405**
1.6 16V	178 B3.000	78	09/1998 →		0,9	12	063223101010	**MSN274**
STILO (192)								
1.2 16V (192_XA1B)	188 A5.000	59	02/2002 →		0,9	12	063102022010	**MSN418**
1.4 16V	192 B2.000	66	03/2005 →		1,4	12	063111007010	**MSN807**
1.6 16V (192_XB1A)	182 B6.000	76	10/2001 → 12/2003		1,1	12	063521070910	**MSN2017**
1.8 16V (192_XC1A)	192 A4.000	98	10/2001 → 12/2003		1,4	12	063111007010	**MSN807**
1.8 16V (192_XC1A)	192 A4.000	98	10/2001 → 12/2003	👁	1,1	12	063521070660	**MSN2069**
1.8 16V (192_XC1A)	192 A4.000	98	10/2001 → 12/2003	👁	1,1	12	063521074110	**MSN2076**
1.9 JTD (192_XE1A)	192 A1.000, 937 A7.000	85	10/2001 →		1,8	12	063113002010	**MSN816**
1.9 JTD (192_XF1A)	192 A3.000	59	02/2002 →		1,8	12	063113002010	**MSN816**
2.4 20V (192_XD1A)	192 A2.000	125	10/2001 →		1,4	12	063111007010	**MSN807**
STILO Multi Wagon (192)								
1.4 16V	192 B2.000	66	03/2005 →		1,4	12	063111007010	**MSN807**
1.6 16V	182 B6.000	76	01/2003 →		1,1	12	063521070910	**MSN2017**
1.8 16V	192 A4.000	98	01/2003 →		1,4	12	063111007010	**MSN807**
1.8 16V	192 A4.000	98	01/2003 →		1,1	12	063521070660	**MSN2069**
1.8 16V	192 A4.000	98	01/2003 → 12/2007		1,1	12	063521074110	**MSN2076**
STRADA (178E)								
1.2	178 B5.000	54	06/1999 →		0,8	12	063101023010	**MSN410**
1.2	188 A4.000	44	04/2003 →		0,8	12	063101023010	**MSN410**
1.7 TD	176 A3.000	51	06/1999 → 03/2003		1,6	12	063112003010	**MSN209**
1.7 TD	176 A3.000	51	06/1999 → 03/2003		1,8	12	063521090180	**MSN2084**
1.9 D	223 A6.000	46	12/2000 → 01/2006		1,8	12	063113003010	**MSN824**
1.9 D	223 A6.000	46	12/2000 → 03/2003		1,7	12	063521082040	**MSN2001**
1.9 JTD	188 A2.000	59	04/2003 →		1,8	12	063113002010	**MSN816**
TEMPRA (159)								
1.4 i.e. (159.AC)	159 A2.000	57	03/1991 → 12/1993		0,9	12	063223085010	**MSN520**
1.4 i.e. (159.AC, 159.AX)	160 A1.046, 836 A4.000	51	03/1992 → 08/1996		1,0	12	063103022010	**MSN924**
1.4 i.e. (159.AC, 159.AX)	160 A1.046, 836 A4.000	51	03/1992 → 12/1993		0,9	12	063223085010	**MSN520**
1.4 i.e. (159.AC, 159.AX)	160 A1.046, 836 A4.000	51	03/1991 → 12/1993		0,9	12	063223101010	**MSN274**
1.6	159 A3.000	63	03/1990 → 04/1993	👁	0,9	12	063223085010	**MSN520**
1.6	159 A3.000	63	03/1990 → 04/1993	👁	0,9	12	063223101010	**MSN274**
1.6	159 A3.048	51	06/1992 → 03/1993		0,9	12	063223101010	**MSN274**
1.6 i.e. (159.AE)	159 A3.046	57	06/1990 → 07/1992		0,9	12	063223101010	**MSN274**
1.6 i.e. (159.AJ)	159 B9.000	63	06/1994 → 08/1996		0,9	12	063223085010	**MSN520**
1.6 i.e. (159.AJ)	159 B9.000	66	06/1994 → 08/1996		0,9	12	063223085010	**MSN520**
1.6 i.e. (159.AJ)	159 B9.000	63	12/1994 → 08/1996		0,9	12	063223101010	**MSN274**
1.6 i.e. (159.AS, 159.AT)	159 A3.048, 835 C1.000	55	06/1992 → 12/1993		0,9	12	063223085010	**MSN520**

		kW		i	kW	V	LONG	SHORT
FIAT								
TEMPRA (159)								
1.6 i.e. (159.AS, 159.AT)	159 A3.048, 835 C1.000	55	10/1992 → 03/1993		0,9	12	063223101010	**MSN274**
1.8 i.e. (159.AN)	159 A4.046	77	03/1992 → 08/1996		1,0	12	063103022010	**MSN924**
1.8 i.e. (159.AV)	835 C2.000	76	09/1993 → 08/1996		1,0	12	063103022010	**MSN924**
1.8 i.e. (159.AZ)	835 C4.000	66	09/1993 → 08/1996		1,0	12	063103022010	**MSN924**
1.8 i.e. (159.BY)	836 A5.000	74	10/1994 → 08/1996		1,0	12	063103022010	**MSN924**
2.0 i.e. (159.AP)	159 A6.046	83	10/1990 → 06/1993		1,0	12	063103022010	**MSN924**
2.0 i.e. (159.AP)	159 A6.046	83	10/1990 → 06/1993		1,4	12	063111007010	**MSN807**
TEMPRA S.W. (159)								
1.4 i.e. (159.AC)	159 A2.000	57	03/1991 → 12/1993		0,9	12	063223085010	**MSN520**
1.4 i.e. (159.AC)	159 A2.000	57	10/1992 → 03/1993		0,9	12	063223101010	**MSN274**
1.4 i.e. (159.AC, 159.AX)	160 A1.046, 836 A4.000	51	07/1993 → 08/1996		0,9	12	063223085010	**MSN520**
1.4 i.e. (159.AC, 159.AX)	160 A1.046, 836 A4.000	51	10/1992 → 12/1993		0,9	12	063223101010	**MSN274**
1.6	159 A3.000	63	12/1990 → 04/1993		0,9	12	063223101010	**MSN274**
1.6 i.e. (159.AE)	159 A3.046, 835 C1.000	57	01/1991 → 07/1992		0,9	12	063223101010	**MSN274**
1.6 i.e. (159.AJ)	159 B9.000	66	06/1994 → 08/1996		0,9	12	063223085010	**MSN520**
1.6 i.e. (159.AJ)	159 B9.000	66	06/1994 → 08/1996		0,9	12	063223101010	**MSN274**
1.6 i.e. (159.AS, 159.AT)	159 A3.048, 835 C1.000	55	10/1992 → 12/1993		0,9	12	063223085010	**MSN520**
1.8 i.e. (159.AN)	159 A4.046	77	03/1992 → 12/1993		1,0	12	063103022010	**MSN924**
1.8 i.e. (159.AN)	159 A4.046	77	03/1992 → 12/1993		1,4	12	063111007010	**MSN807**
1.8 i.e. (159.AN)		81	03/1990 → 08/1996		1,0	12	063103022010	**MSN924**
1.8 i.e. (159.AN)		81	03/1990 → 08/1996		1,4	12	063111007010	**MSN807**
1.8 i.e. (159.AV)	835 C2.000	76	09/1993 → 08/1996		1,0	12	063103022010	**MSN924**
1.8 i.e. (159.AV)	835 C2.000	76	09/1993 → 08/1996		1,4	12	063111007010	**MSN807**
1.8 i.e. (159.AZ)	835 C4.000	66	09/1993 → 08/1996		1,0	12	063103022010	**MSN924**
1.8 i.e. (159.BY)	836 A5.000	74	10/1994 → 08/1996		1,0	12	063103022010	**MSN924**
2.0 i.e. (159.AP)	159 A6.046	83	01/1991 → 06/1993		1,0	12	063103022010	**MSN924**
2.0 i.e. (159.AP)	159 A6.046	83	01/1991 → 06/1993		1,4	12	063111007010	**MSN807**
2.0 i.e. 4x4 (159.AP)	159 A6.046	83	07/1992 → 03/1995		1,0	12	063103022010	**MSN924**
2.0 i.e. 4x4 (159.AP)	159 A6.046	83	07/1992 → 03/1995		1,4	12	063111007010	**MSN807**
TIPO (160)								
1.1 (160.AA)	160 A3.000	41	01/1988 → 10/1991		0,8	12	063101023010	**MSN410**
1.4 (160.AC)	160 A1.000, 160 A1.048	52	07/1987 → 12/1989		0,9	12	063223101010	**MSN274**
1.4 i.e.	159 A2.000	57	01/1990 → 03/1993		0,9	12	063223085010	**MSN520**
1.4 i.e.	159 A2.000	57	01/1993 → 04/1995		0,9	12	063223101010	**MSN274**
1.4 i.e. (160.AP, 160.AD, 160.EA)	160 A1.046, 836 A4.000	51	05/1989 → 12/1993		0,9	12	063223101010	**MSN274**
1.6 (160.AE)	160 A2.000	61	01/1988 → 12/1990		0,9	12	063223085010	**MSN520**
1.6 i.e.	149 C2.046	66	02/1988 → 05/1991		0,9	12	063223101010	**MSN274**
1.6 i.e. (160.A1, 160.EC, 160.EB)	159 A3.048, 835 C1.000	55	10/1992 → 04/1995		0,9	12	063223085010	**MSN520**
1.6 i.e. (160.A1, 160.EC, 160.EB)	159 A3.048, 835 C1.000	55	01/1993 → 04/1995		0,9	12	063223101010	**MSN274**

		kW		i	kW	V	LONG	SHORT
FIAT								
TIPO (160)								
1.6 i.e. (160.AF)	159 A3.046	57	07/1990 → 01/1993		0,9	12	063223101010	**MSN274**
1.7 D (160.AG)	149 B4.000	43	01/1988 → 09/1991		1,7	12	063521100250	**MSN2027**
1.7 D (160.AG)	149 B4.000	43	01/1988 → 09/1991		1,7	12	063521101250	**MSN2003**
1.7 D (160.AG)		45	07/1987 → 09/1991		1,7	12	063521100250	**MSN2027**
1.7 D (160.AG)		45	10/1991 → 10/1995		1,7	12	063521101250	**MSN2003**
ULYSSE (179AX)								
2.0	RFN(EW10J4)	100	02/2004 → 10/2005		1,4	12	063521084000	**MSN2083**
2.0 D Multijet	RHK	88	05/2006 →		2,0	12	063280090010	**MSN8090**
2.0 D Multijet	RHR	100	05/2006 →		2,0	12	063280090010	**MSN8090**
2.0 JTD	RHM(DW10ATED4)	79	05/2003 →		2,0	12	063280090010	**MSN8090**
2.0 JTD	RHW(DW10ATED4)	80	08/2002 →		2,0	12	063280090010	**MSN8090**
2.2 JTD	4HW(DW12ATED4)	94	08/2002 →		2,0	12	063280090010	**MSN8090**
ULYSSE (220)								
1.8 (220.BB5)	LFW	73	05/1997 → 05/2000		1,1	12	063521070630	**MSN2015**
1.8 (220.BB5)	LFW	73	05/1997 → 05/2000		1,4	12	063521081760	**MSN2079**
1.9 TD (220AH5)	DHX (XUD9TF/L)	66	10/1996 → 12/1999		1,4	12	063521081760	**MSN2079**
2.0 (220.AC5)	RFU (XU10J2C)	89	09/1994 → 05/2000		1,1	12	063521070630	**MSN2015**
2.0 (220.AC5)	RFU (XU10J2C)	89	09/1994 → 05/2000		1,4	12	063521081760	**MSN2079**
2.0 16V	RFV	97	05/1998 → 05/2000		1,1	12	063521070630	**MSN2015**
2.0 16V	RFV	97	05/1998 → 05/2000		1,4	12	063521081760	**MSN2079**
2.0 Turbo (220.AD5)	RGX (XU10J2CTE)	108	09/1994 → 05/2000		1,1	12	063521070630	**MSN2015**
2.0 Turbo (220.AD5)	RGX (XU10J2CTE)	108	09/1994 → 05/2000		1,4	12	063521081760	**MSN2079**
UNO (146A/E)								
1.0	156 A2.000	31	09/1989 → 02/1992		0,8	12	063101023010	**MSN410**
1.3 Super Diesel	127 A5.000, 146 B1.000	33	06/1983 → 03/1992		1,7	12	063521100250	**MSN2027**
1.3 Turbo i.e.	146 A2.000	77	04/1985 → 08/1989		0,9	12	063223085010	**MSN520**
1.3 Turbo i.e.	146 A2.146	73	01/1987 → 12/1987		0,9	12	063223085010	**MSN520**
1.3 Turbo i.e.	146 A2.246	74	09/1989 → 03/1991		0,9	12	063223085010	**MSN520**
1.4	160 A1.046	51	01/1993 → 03/1994		0,9	12	063223101010	**MSN274**
1.4 Turbo i.e.	146 A8.000	87	01/1993 → 12/1996		0,9	12	063223085010	**MSN520**
1.4 Turbo i.e.	146 A8.000	87	12/1989 → 12/1992		0,9	12	063223101010	**MSN274**
1.4 Turbo i.e.	146 A8.046	82	01/1990 → 09/1993		0,9	12	063223101010	**MSN274**
45 0.9	146 A.000, 146 A.1000	33	04/1984 → 12/1988		0,8	12	063222908010	**MSN290**
45 1.0 (146A.ED)	156 A2.048, 156 A2.100	32	10/1987 → 12/1993		0,8	12	063101023010	**MSN410**
45 i.e. 1.0	156 A2.246	33	10/1987 → 03/1994		0,8	12	063101023010	**MSN410**
45 i.e. 1.0	156 A2.246	33	10/1984 → 12/1988		0,8	12	063222908010	**MSN290**
50 1.1	156 C.046	37	01/1990 → 12/1993		0,8	12	063101023010	**MSN410**
60 1.1	160 A3.000	42	09/1989 → 09/1992		0,8	12	063101023010	**MSN410**
60 1.1	160 A3.000	42	04/1989 → 12/1992		0,9	12	063223101010	**MSN274**
60 1.1 (146A.EG)	146 A4.048	43	01/1987 → 08/1989		0,9	12	063223101010	**MSN274**
60 Diesel 1.7	146 B2.000	42	09/1989 → 09/1991		1,7	12	063521100250	**MSN2027**
60 Diesel 1.7	149 B3.000	44	07/1986 → 08/1989		1,7	12	063521100250	**MSN2027**

		kW		i	kW	V	LONG	SHORT
FIAT								
UNO (146A/E)								
70 1.3	138 B2.000	50	01/1984 → 04/1985		0,9	12	063223101010	**MSN274**
70 i.e. 1.4	146 C1.000	53	09/1989 → 12/1992		0,9	12	063223085010	**MSN520**
70 i.e. 1.4	160 A1.046	51	01/1993 → 12/1993		0,9	12	063223101010	**MSN274**
70 S 1.4	160 A1.048	52	09/1989 → 10/1992		0,9	12	063223085010	**MSN520**
70 TD 1.4	146 B.000, 146 B3.000	52	10/1986 → 10/1990		1,7	12	063521100250	**MSN2027**
75 i.e. 1.5	138 C2.048, 149 C1.000	55	10/1985 → 12/1988		0,9	12	063223085010	**MSN520**
75 i.e. 1.5	138 C2.048, 149 C1.000	55	09/1989 → 12/1992		0,9	12	063223101010	**MSN274**
FORD								
C-MAX								
1.6	HWDA, HWDB, SHDA, SHDB, SHDC	74	02/2007 →		1,2	12	063280010010	**MSN8010**
1.6 TDCi	G8DA, G8DB, G8DD	80	02/2007 →		1,2	12	063280029010	**MSN8029**
1.6 TDCi	GPDA, HHDA, HHDB	66	02/2007 →		1,2	12	063280029010	**MSN8029**
1.8	QQDA, QQDB	92	02/2007 →		1,2	12	063280028010	**MSN8028**
1.8 Flexifuel	Q7DA	92	02/2007 →		1,2	12	063280028010	**MSN8028**
2.0	AODA, AODB, AODE, SYDA	107	02/2007 →		1,2	12	063280027010	**MSN8027**
2.0 TDCi	G6DA, G6DB, G6DD, G6DG	100	02/2007 →		2,2	12	063280036010	**MSN8036**
2.0 TDCi	IXDA	81	02/2008 →		2,2	12	063280036010	**MSN8036**
COUGAR (EC_)								
2.0 16V		96	08/1998 → 12/2001		1,4	12	063280005010	**MSN8005**
2.5 V6 24V	LCBA	125	08/1998 → 12/2001		1,4	12	063280032010	**MSN8032**
COURIER Pick-up								
1.8 D		44	06/1999 → 02/2002		2,2	12	063280008010	**MSN8008**
ESCORT '81 Express (AVA)								
1.3	JPA	51	03/1981 → 02/1986		1,4	12	063280014010	**MSN8014**
1.6 D	LTA	40	04/1984 → 12/1985		1,9	12	063521101040	**MSN2086**
ESCORT '86 Express (AVF)								
1.6 D	LTA	40	02/1986 → 12/1988		1,9	12	063521101040	**MSN2086**
1.8 D	RTA, RTB	44	01/1989 → 07/1990		1,9	12	063521101040	**MSN2086**
ESCORT '91 Express (AVL)								
1.4	F6F, F6G	52	07/1990 → 12/1994		1,4	12	063280014010	**MSN8014**
ESCORT '95 Furgonato (AVL)								
1.4	F4B	54	01/1995 →		1,4	12	063280014010	**MSN8014**
1.8 D	RTF, RTH	44	01/1995 → 09/2001		1,9	12	063521101040	**MSN2086**
1.8 D		44	01/1995 →		2,2	12	063280008010	**MSN8008**
1.8 Turbo D	RVA	51	12/1995 → 06/2001		1,9	12	063521101040	**MSN2086**
1.8 Turbo D		51	12/1995 → 06/2001		2,2	12	063280008010	**MSN8008**
ESCORT CLASSIC (AAL, ABL)								
1.8 TD	RFD, RFK	66	10/1998 → 07/2000		1,9	12	063521101040	**MSN2086**
1.8 TD		66	10/1998 → 07/2000		2,2	12	063280008010	**MSN8008**
ESCORT CLASSIC Turnier (ANL)								
1.8 TD	RFD, RFK	66	02/1999 → 07/2000		1,1	12	063280006010	**MSN8006**

		kW			kW	V	LONG	SHORT
FORD								
ESCORT CLASSIC Turnier (ANL)								
1.8 TD	RFD, RFK	66	02/1999 → 07/2000		1,9	12	063521101040	**MSN2086**
1.8 TD		66	02/1999 → 07/2000		2,2	12	063280008010	**MSN8008**
ESCORT III (GAA)								
1.1	GLB, GMA	40	09/1980 → 08/1983		1,4	12	063280014010	**MSN8014**
1.1	GPA	43	09/1980 → 08/1983		1,4	12	063280014010	**MSN8014**
1.1	GSE	37	08/1983 → 12/1985		1,4	12	063280014010	**MSN8014**
1.3	JPA	51	09/1980 → 12/1985		1,4	12	063280014010	**MSN8014**
1.6	LP1, LPA	58	09/1980 → 12/1985		1,4	12	063280014010	**MSN8014**
1.6	LUA	71	09/1980 → 10/1982		1,4	12	063280014010	**MSN8014**
1.6 D	LTA	40	02/1984 → 12/1985		1,9	12	063521101040	**MSN2086**
1.6 i (GAA)	L4B	66	07/1985 → 12/1985		1,4	12	063280014010	**MSN8014**
1.6 RS Turbo	LNA	97	11/1984 → 12/1985		1,4	12	063280014010	**MSN8014**
1.6 XR3i	LR1, LRA	77	10/1982 → 12/1985		1,4	12	063280014010	**MSN8014**
RS 1600i		85	05/1982 → 12/1985		1,4	12	063280014010	**MSN8014**
ESCORT III Cabriolet (ALD)								
1.3	JPA	51	09/1983 → 12/1985		1,4	12	063280014010	**MSN8014**
1.6	LP1, LPA	58	09/1983 → 12/1985		1,4	12	063280014010	**MSN8014**
1.6 i	LR1, LRA	77	09/1983 → 12/1985		1,4	12	063280014010	**MSN8014**
ESCORT III Station wagon (AWA)								
1.3	JPA	51	03/1981 → 12/1985		1,4	12	063280014010	**MSN8014**
1.6	LP1, LPA	58	09/1980 → 12/1985		1,4	12	063280014010	**MSN8014**
1.6 D	LTA	40	02/1984 → 12/1985		1,9	12	063521101040	**MSN2086**
ESCORT IV (GAF, AWF, ABFT)								
1.1	GSG	37	12/1985 → 07/1990		1,4	12	063280014010	**MSN8014**
1.4	FUAA	51	10/1985 → 10/1990		1,4	12	063280014010	**MSN8014**
1.6	LUG	65	04/1989 → 07/1990		1,4	12	063280014010	**MSN8014**
1.6 D	LTC	40	01/1986 → 12/1988		1,9	12	063521101040	**MSN2086**
1.8 D	RTA, RTB	44	01/1989 → 07/1990		1,9	12	063521101040	**MSN2086**
ESCORT IV Station wagon (AWF, AVF)								
1.6 D	LTC	40	01/1986 → 12/1988		1,9	12	063521101040	**MSN2086**
1.8 D	RTA, RTB	44	01/1989 → 07/1990		1,9	12	063521101040	**MSN2086**
ESCORT V (GAL)								
1.4	F6F, F6G	52	07/1990 → 09/1992		1,4	12	063280014010	**MSN8014**
1.6	LJF	77	07/1990 → 12/1992		1,4	12	063280014010	**MSN8014**
1.6	LUJ, LUK	66	07/1990 → 08/1992		1,4	12	063280014010	**MSN8014**
1.8 16V XR3i	RDA	77	02/1992 → 12/1992		1,4	12	063280014010	**MSN8014**
ESCORT V Cabriolet (ALL)								
1.4	F6F, F6G	52	07/1990 → 12/1992		1,4	12	063280014010	**MSN8014**
1.6	LJF	77	07/1990 → 12/1992		1,4	12	063280014010	**MSN8014**
ESCORT V Station wagon (GAL, AVL)								
1.4	F6F, F6G	52	07/1990 → 09/1992		1,4	12	063280014010	**MSN8014**
1.6	LJF	77	07/1990 → 09/1992		1,4	12	063280014010	**MSN8014**
1.6	LUJ, LUK	66	07/1990 → 08/1992		1,4	12	063280014010	**MSN8014**

		kW		i	kW	V	LONG	SHORT
FORD								
ESCORT VI (GAL)								
1.3	J4B, J6A	44	09/1992 → 01/1995		1,1	12	063280006010	**MSN8006**
1.4	F4B, FUH	55	01/1994 → 01/1995		1,4	12	063280014010	**MSN8014**
1.4	F6F, F6G	52	09/1992 → 01/1995		1,4	12	063280014010	**MSN8014**
1.8 D		44	09/1992 → 01/1995		2,2	12	063280008010	**MSN8008**
1.8 TD	RFD, RFK, RFS	66	06/1993 → 12/1994		1,9	12	063521101040	**MSN2086**
1.8 TD		66	02/1993 → 01/1995		2,2	12	063280008010	**MSN8008**
ESCORT VI Cabriolet (ALL)								
1.4	F6F, F6G	52	12/1992 → 04/1994		1,4	12	063280014010	**MSN8014**
1.4 i	F4B	55	07/1993 → 01/1995		1,4	12	063280014010	**MSN8014**
ESCORT VI Station wagon (GAL)								
1.4	F4B, FUH	55	01/1994 → 01/1995		1,4	12	063280014010	**MSN8014**
1.4	F6F, F6G	52	09/1992 → 01/1994		1,4	12	063280014010	**MSN8014**
1.8 TD	RFD, RFK	66	06/1993 → 12/1994		1,9	12	063521101040	**MSN2086**
ESCORT VI Tre volumi (GAL)								
1.4	F4B, FUH	55	08/1993 → 01/1995		1,4	12	063280014010	**MSN8014**
1.4	F6F, F6G	52	08/1993 → 04/1994		1,4	12	063280014010	**MSN8014**
1.8 D		44	08/1993 → 01/1995		2,2	12	063280008010	**MSN8008**
1.8 TD	RFD, RFK	66	08/1993 → 12/1994		1,9	12	063521101040	**MSN2086**
1.8 TD		66	08/1993 → 01/1995		2,2	12	063280008010	**MSN8008**
ESCORT VII (GAL, AAL, ABL)								
1.3	J4B, J6A	44	01/1995 → 10/1998		1,1	12	063280006010	**MSN8006**
1.4	F4B	55	01/1995 → 10/1998		1,4	12	063280014010	**MSN8014**
1.8 D	RTE, RTF, RTH	44	01/1995 → 12/1996		1,9	12	063521101040	**MSN2086**
1.8 D		44	01/1995 → 12/1996		2,2	12	063280008010	**MSN8008**
1.8 TD	RFD, RFK	66	01/1995 → 10/1998		1,1	12	063280006010	**MSN8006**
1.8 TD	RFD, RFK	66	01/1995 → 10/1998		1,9	12	063521101040	**MSN2086**
1.8 Turbo D	RVA	51	12/1995 → 10/1998		1,1	12	063280006010	**MSN8006**
1.8 Turbo D	RVA	51	12/1995 → 10/1998		1,9	12	063521101040	**MSN2086**
ESCORT VII Cabriolet (ALL)								
1.4	F4B	55	02/1995 → 08/1998		1,4	12	063280014010	**MSN8014**
1.8 TD	RFD, RFK	66	09/1995 → 08/1998		1,1	12	063280006010	**MSN8006**
1.8 TD	RFD, RFK	66	09/1995 → 08/1998		1,9	12	063521101040	**MSN2086**
1.8 TD		66	09/1995 → 08/1998		2,2	12	063280008010	**MSN8008**
1.8 Turbo D	RVA	51	10/1996 → 08/1999		1,1	12	063280006010	**MSN8006**
1.8 Turbo D	RVA	51	10/1996 → 08/1999		1,9	12	063521101040	**MSN2086**
ESCORT VII Station wagon (GAL, ANL)								
1.3	J4B, J6A	44	01/1995 → 10/1998		1,1	12	063280006010	**MSN8006**
1.4	F4B, FUH	55	01/1995 → 02/1999		1,4	12	063280014010	**MSN8014**
1.8 D	RTE, RTF, RTH	44	01/1995 → 02/1999		1,9	12	063521101040	**MSN2086**
1.8 D		44	01/1995 → 02/1999		2,2	12	063280008010	**MSN8008**
1.8 TD	RFD, RFK	66	01/1995 → 02/1999		1,1	12	063280006010	**MSN8006**
1.8 TD	RFD, RFK	66	01/1995 → 02/1999		1,9	12	063521101040	**MSN2086**
1.8 TD		66	01/1995 → 02/1999		2,2	12	063280008010	**MSN8008**
1.8 Turbo D	RVA	51	12/1995 → 02/1999		1,1	12	063280006010	**MSN8006**

		kW			kW	V	LONG	SHORT
FORD								
ESCORT VII Station wagon (GAL, ANL)								
1.8 Turbo D	RVA	51	12/1995 → 02/1999		1,9	12	063521101040	**MSN2086**
ESCORT VII Tre volumi (GAL, AFL)								
1.3	J4B, J6A	44	01/1995 → 02/1999		1,1	12	063280006010	**MSN8006**
1.4	F4B, FUH	55	01/1995 → 02/1999		1,4	12	063280014010	**MSN8014**
1.8 D	RTE, RTF, RTH	44	01/1995 → 12/1996		1,9	12	063521101040	**MSN2086**
1.8 D		44	01/1995 → 12/1996		2,2	12	063280008010	**MSN8008**
1.8 TD	RFD, RFK	66	01/1995 → 10/1998		1,1	12	063280006010	**MSN8006**
1.8 TD	RFD, RFK	66	01/1995 → 10/1998		1,9	12	063521101040	**MSN2086**
1.8 TD		66	01/1995 → 10/1998		2,2	12	063280008010	**MSN8008**
1.8 Turbo D	RVA	51	12/1995 → 02/1999		1,1	12	063280006010	**MSN8006**
1.8 Turbo D	RVA	51	12/1995 → 02/1999		1,9	12	063521101040	**MSN2086**
1.8 Turbo D		51	12/1995 → 02/1999		2,2	12	063280008010	**MSN8008**
FIESTA Furgonato (FVD)								
1.4		52	09/1986 → 09/1989		1,4	12	063280014010	**MSN8014**
1.6 D		40	04/1984 → 02/1989		1,9	12	063521101040	**MSN2086**
1.8 D (FVJ)	RTC, RTD, RTG	43	03/1989 → 12/1995		1,9	12	063521101040	**MSN2086**
1.8 D (FVJ)		43	03/1989 → 12/1995		2,2	12	063280008010	**MSN8008**
1.8 TD		55	07/1993 → 08/1995		2,2	12	063280008010	**MSN8008**
FIESTA Furgonato (J5_, J3_)								
1.4 i	FHA	66	04/1996 → 10/1999		1,2	12	063280010010	**MSN8010**
1.8 D	RTK	44	02/1996 → 06/2001		1,9	12	063521101040	**MSN2086**
FIESTA Furgonato (JV_)								
D 1.8	RTJ, RTK	44	05/1998 →		1,1	12	063280006010	**MSN8006**
D 1.8	RTJ, RTK	44	05/1998 → 06/2001		1,9	12	063521101040	**MSN2086**
D 1.8		44	05/1998 →		2,2	12	063280008010	**MSN8008**
TD 1.8	RTN, RTP, RTQ	55	03/2000 →		1,1	12	063280006010	**MSN8006**
TD 1.8		55	03/2000 →		2,2	12	063280008010	**MSN8008**
FIESTA II (FBD)								
1.0 (FBD)	TKB	33	09/1983 → 02/1989		1,4	12	063280014010	**MSN8014**
1.1 (FBD)	GSH	36	05/1986 → 02/1989		1,4	12	063280014010	**MSN8014**
1.3 (FBD)	JPC	51	09/1983 → 01/1987		1,4	12	063280014010	**MSN8014**
1.4	FUBA	51	09/1983 → 01/1987		1,4	12	063280014010	**MSN8014**
1.4 (FBD)	F6A, F6C	52	10/1986 → 02/1989		1,4	12	063280014010	**MSN8014**
1.4 (FBD)	FUB	55	10/1985 → 11/1989		1,4	12	063280014010	**MSN8014**
1.4 (FBD)	FUD	54	02/1987 → 02/1989		1,4	12	063280014010	**MSN8014**
1.6		58	01/1985 → 11/1989		1,4	12	063280014010	**MSN8014**
1.6 D (FBD)	LTB	40	04/1984 → 02/1989		1,9	12	063521101040	**MSN2086**
1.6 XR2 (FBD)	LUD	70	03/1984 → 02/1989		1,4	12	063280014010	**MSN8014**
FIESTA III (GFJ)								
1.1	G6A	37	03/1989 → 12/1995		1,4	12	063280014010	**MSN8014**
1.4	F6E	52	03/1989 → 12/1995		1,4	12	063280014010	**MSN8014**
1.4	FUG, FUJ	54	03/1989 → 12/1995		1,4	12	063280014010	**MSN8014**
1.6	LUH	65	01/1989 → 01/1994		1,4	12	063280014010	**MSN8014**
1.6		66	03/1989 → 12/1992		1,4	12	063280014010	**MSN8014**

		kW		i	kW	V	LONG	SHORT
FORD								
FIESTA III (GFJ)								
1.6 XR2i	LJC	81	03/1989 → 01/1994		1,4	12	063280014010	**MSN8014**
1.6 XR2i	LJD	76	03/1989 → 03/1993		1,4	12	063280014010	**MSN8014**
1.8 16V	RDB	77	02/1992 → 12/1995		1,4	12	063280014010	**MSN8014**
1.8 D	RTC, RTD, RTG	44	03/1989 → 12/1995		1,9	12	063521101040	**MSN2086**
1.8 D		44	03/1989 → 12/1995		2,2	12	063280008010	**MSN8008**
1.8 TD		57	03/1993 → 12/1995		2,2	12	063280008010	**MSN8008**
FIESTA IV (JA_, JB_)								
1.25 i 16V	DHA, DHB, DHC, DHD, DHE, DHF,DHG	55	08/1995 → 01/2002		1,2	12	063280010010	**MSN8010**
1.3 i	J4C, J4J, J4L, J4Q, J4R, J4T	44	08/1995 → 01/2002		1,1	12	063280006010	**MSN8006**
1.3 i	JJA, JJC, JJE, JJJ, JJK, JJM	37	08/1995 → 01/2002		1,1	12	063280006010	**MSN8006**
1.4 i 16V	FHA, FHE	66	04/1996 → 01/2002		1,2	12	063280010010	**MSN8010**
1.6 16V Sport	L1T, L1V	76	02/2000 → 01/2002		1,2	12	063280010010	**MSN8010**
1.8 D	RTJ, RTK	44	08/1995 → 04/2000		1,1	12	063280006010	**MSN8006**
1.8 D	RTJ, RTK	44	10/1995 → 04/2000		1,9	12	063521101040	**MSN2086**
1.8 D		44	08/1995 → 04/2000		2,2	12	063280008010	**MSN8008**
1.8 DI		55	04/2000 → 01/2002		2,2	12	063280008010	**MSN8008**
FIESTA V (JH_, JD_)								
1.25 16V	FUJA, FUJB	55	05/2002 →		1,2	12	063280010010	**MSN8010**
1.25 16V	M7JA, M7JB	51	03/2003 →		1,2	12	063280010010	**MSN8010**
1.4 16V	FXJA, FXJB	59	11/2001 →		1,2	12	063280010010	**MSN8010**
1.4 TDCi	F6JA, F6JB	50	11/2001 →		1,4	12	063280021010	**MSN8021**
1.6 16V	FYJA, FYJB	74	11/2001 →		1,2	12	063280010010	**MSN8010**
1.6 TDCi	HHJA, HHJB	66	11/2004 →		1,4	12	063280021010	**MSN8021**
FIESTA Van								
1.4 TDCi	F6JA, F6JB	50	10/2003 →		1,4	12	063280021010	**MSN8021**
FOCUS (DAW, DBW)								
1.4 16V	FXDA, FXDB, FXDC, FXDD	55	10/1998 → 11/2004		1,2	12	063280010010	**MSN8010**
1.6 16V	FYDA, FYDB, FYDC, FYDD, FYDH	74	10/1998 → 11/2004		1,2	12	063280010010	**MSN8010**
1.8 16V	EYDB, EYDC, EYDD, EYDE, EYDF, EYDG, EYDI, EYDJ, EYDL	85	10/1998 → 11/2004		2,8	12	063227602010	**MSN199**
1.8 16V		85	10/1998 → 11/2004		1,4	12	063280005010	**MSN8005**
1.8 DI / TDDi		55	08/1999 → 11/2004		2,2	12	063280008010	**MSN8008**
1.8 TDCi		85	03/2001 → 11/2004		2,2	12	063280008010	**MSN8008**
1.8 TDCi		74	09/2002 → 11/2004		2,2	12	063280008010	**MSN8008**
1.8 Turbo DI / TDDi		66	10/1998 → 11/2004		2,2	12	063280008010	**MSN8008**
2.0 16V	EDDB, EDDC, EDDD, EDDF	96	10/1998 → 11/2004		2,8	12	063227602010	**MSN199**
2.0 16V		96	10/1998 → 11/2004		1,4	12	063280005010	**MSN8005**

		kW		i	kW	V	LONG	SHORT
FORD								
FOCUS (DAW, DBW)								
RS		158	10/2002 → 11/2004		1,4	12	063280005010	**MSN8005**
ST170	ALDA	127	03/2002 → 11/2004		2,8	12	063227602010	**MSN199**
FOCUS C-MAX								
1.6	HWDA, HWDB	74	10/2003 → 03/2007		1,2	12	063280010010	**MSN8010**
1.6 TDCi	G8DA, G8DB	80	10/2003 → 03/2007		1,2	12	063280029010	**MSN8029**
1.6 TDCi	HHDA, HHDB	66	02/2005 → 03/2007		1,2	12	063280029010	**MSN8029**
1.6 Ti	HXDA, SIDA	85	08/2004 → 03/2007		1,2	12	063280010010	**MSN8010**
1.8	CSDA, CSDB	88	10/2003 → 03/2007		1,2	12	063280027010	**MSN8027**
1.8	CSDA, CSDB	88	10/2003 → 03/2007		1,2	12	063280028010	**MSN8028**
1.8	Q7DA, QQDA, QQDB	92	04/2004 → 03/2007		1,2	12	063280028010	**MSN8028**
1.8 Flexifuel	Q7DA	92	01/2006 → 03/2007		1,2	12	063280028010	**MSN8028**
2.0	AODA, AODB, SYDA	107	04/2004 → 03/2007		1,2	12	063280027010	**MSN8027**
2.0 TDCi	G6DA, G6DB, G6DD	100	10/2003 → 03/2007		2,2	12	063280036010	**MSN8036**
FOCUS II (DA_)								
1.4	ASDA, ASDB	59	11/2004 →		1,2	12	063280010010	**MSN8010**
1.6	HWDA, HWDB, SHDA	74	11/2004 →		1,2	12	063280010010	**MSN8010**
1.6 TDCi	G8DA, G8DB	80	11/2004 →		1,2	12	063280029010	**MSN8029**
1.6 TDCi	GPDA, GPDC, HHDA, HHDB	66	01/2005 →		1,2	12	063280029010	**MSN8029**
1.6 Ti	HXDA, HXDB	85	11/2004 →		1,2	12	063280010010	**MSN8010**
1.8 Flexifuel	Q7DA	92	01/2006 →		1,2	12	063280028010	**MSN8028**
2.0	AODA, AODB	107	11/2004 →		1,2	12	063280027010	**MSN8027**
2.0 TDCi	G6DA, G6DB, G6DD	100	11/2004 →		2,2	12	063280036010	**MSN8036**
2.0 TDCi	IXDA	81	02/2008 →		2,2	12	063280036010	**MSN8036**
FOCUS II Cabriolet								
1.6	HWDA, HWDB	74	10/2006 →		1,2	12	063280010010	**MSN8010**
2.0 TDCi	G6DA, G6DB, G6DD	100	10/2006 →		2,2	12	063280036010	**MSN8036**
FOCUS II Station wagon (DAW_)								
1.4	ASDA, ASDB	59	11/2004 →		1,2	12	063280010010	**MSN8010**
1.6	HWDA, HWDB, SHDA	74	11/2004 →		1,2	12	063280010010	**MSN8010**
1.6 TDCi	G8DA, G8DB	80	11/2004 →		1,2	12	063280029010	**MSN8029**
1.6 TDCi	GPDA, GPDC, HHDA, HHDB	66	11/2004 →		1,2	12	063280029010	**MSN8029**
1.6 Ti	HXDA, HXDB	85	11/2004 →		1,2	12	063280010010	**MSN8010**
1.8 Flexifuel	Q7DA	92	01/2006 →		1,2	12	063280028010	**MSN8028**
2.0	AODA, AODB	107	11/2004 →		1,2	12	063280027010	**MSN8027**
2.0 TDCi	G6DA, G6DB, G6DD	100	11/2004 →		2,2	12	063280036010	**MSN8036**
2.0 TDCi	IXDA	81	02/2008 →		2,2	12	063280036010	**MSN8036**
FOCUS II Tre volumi (DA_)								
1.4	ASDA, ASDB	59	04/2005 →		1,2	12	063280010010	**MSN8010**
1.6	HWDA, HWDB, SHDA	74	04/2005 →		1,2	12	063280010010	**MSN8010**
1.6 TDCi	G8DA, G8DB	80	04/2005 →		1,2	12	063280029010	**MSN8029**

		kW		i	kW	V	LONG	SHORT
FORD								
FOCUS II Tre volumi (DA_)								
1.6 TDCi	HHDA, HHDB	66	04/2005 →		1,2	12	063280029010	**MSN8029**
1.6 Ti	HXDA, HXDB	85	04/2005 →		1,2	12	063280010010	**MSN8010**
1.8 Flexifuel	Q7DA	92	06/2006 →		1,2	12	063280028010	**MSN8028**
2.0	AODA, AODB	107	04/2005 →		1,2	12	063280027010	**MSN8027**
2.0 TDCi	G6DA, G6DB, G6DD	100	04/2005 →		2,2	12	063280036010	**MSN8036**
2.0 TDCi	IXDA	81	02/2008 →		2,2	12	063280036010	**MSN8036**
FOCUS Station wagon (DNW)								
1.4 16V	FXDA, FXDB, FXDC, FXDD	55	02/1999 → 11/2004		1,2	12	063280010010	**MSN8010**
1.6 16V	FYDA, FYDB, FYDC, FYDD, FYDH	74	02/1999 → 11/2004		1,2	12	063280010010	**MSN8010**
1.8 16V	EYDB, EYDC, EYDD, EYDE, EYDF, EYDG, EYDI, EYDJ, EYDL	85	02/1999 → 11/2004		2,8	12	063227602010	**MSN199**
1.8 16V		85	02/1999 → 11/2004		1,4	12	063280005010	**MSN8005**
1.8 DI / TDDi		55	08/1999 → 11/2004		2,2	12	063280008010	**MSN8008**
1.8 TDCi		85	03/2001 → 11/2004		2,2	12	063280008010	**MSN8008**
1.8 TDCi		74	09/2002 → 11/2004		2,2	12	063280008010	**MSN8008**
1.8 Turbo DI / TDDi		66	02/1999 → 11/2004		2,2	12	063280008010	**MSN8008**
2.0 16V	EDDB, EDDC, EDDD, EDDF	96	02/1999 → 11/2004		2,8	12	063227602010	**MSN199**
2.0 16V		96	02/1999 → 11/2004		1,4	12	063280005010	**MSN8005**
ST170	ALDA	127	08/2002 → 11/2004		2,8	12	063227602010	**MSN199**
FOCUS Tre volumi (DFW)								
1.4 16V	FXDA, FXDB, FXDC, FXDD	55	02/1999 → 11/2004		1,2	12	063280010010	**MSN8010**
1.6		74	09/2000 → 08/2003		1,2	12	063280010010	**MSN8010**
1.6 16V	FYDA, FYDB, FYDC, FYDD, FYDH	74	02/1999 → 11/2004		1,2	12	063280010010	**MSN8010**
1.8		85	09/2002 → 08/2003		1,4	12	063280005010	**MSN8005**
1.8 16V	EYDB, EYDC, EYDD, EYDE, EYDF, EYDG, EYDI, EYDJ, EYDL	85	02/1999 → 11/2004		2,8	12	063227602010	**MSN199**
1.8 16V		85	02/1999 → 11/2004		1,4	12	063280005010	**MSN8005**
1.8 TDCi		74	09/2002 → 11/2004		2,2	12	063280008010	**MSN8008**
1.8 TDCi		85	03/2001 → 11/2004		2,2	12	063280008010	**MSN8008**
1.8 Turbo DI / TDDi		66	02/1999 → 11/2004		2,2	12	063280008010	**MSN8008**
2.0 16V	EDDB, EDDC, EDDD, EDDF	96	02/1999 → 11/2004		2,8	12	063227602010	**MSN199**
2.0 16V		96	02/1999 → 11/2004		1,4	12	063280005010	**MSN8005**
FUSION (JU_)								
1.25	FUJA, FUJB	55	08/2004 →		1,2	12	063280010010	**MSN8010**
1.4	FXJA, FXJB	59	08/2002 →		1,2	12	063280010010	**MSN8010**
1.4 TDCi	F6JA, F6JB	50	08/2002 →		1,4	12	063280021010	**MSN8021**

		kW			kW	V	LONG	SHORT
FORD								
FUSION (JU_)								
1.6	FYJA, FYJB	74	08/2002 →		1,2	12	063280010010	**MSN8010**
1.6 TDCi	HHJA, HHJB	66	11/2004 →		1,4	12	063280021010	**MSN8021**
GALAXY								
2.0 TDCi	AZWA	96	05/2006 →		2,2	12	063280036010	**MSN8036**
2.0 TDCi	KLWA, TYWA	85	11/2007 →		2,2	12	063280036010	**MSN8036**
2.0 TDCi	QXWA, QXWB, QXWC, UFWA	103	05/2006 →		2,2	12	063280036010	**MSN8036**
GALAXY (WGR)								
1.9 TDI	1Z, AHU, ANU	66	04/2000 → 08/2006		2,0	12	063521250480	**MSN2113**
1.9 TDI	ASZ	96	02/2003 → 08/2006		2,0	12	063521250480	**MSN2113**
1.9 TDI	AUY	85	04/2000 → 08/2006		2,0	12	063521250480	**MSN2113**
1.9 TDI	BTB	110	05/2005 → 08/2006		2,0	12	063521250480	**MSN2113**
2.0 i	NSE, ZVSA	85	11/1995 → 06/1998		0,9	12	063521120380	**MSN2089**
2.8 i V6	AAA, AMY	128	11/1995 → 03/2000		2,0	12	063521250350	**MSN2111**
2.8 i V6 4x4	AAA, AMY	128	07/1996 → 03/2000		2,0	12	063521250350	**MSN2111**
2.8 V6	AYL	150	04/2000 → 08/2006		2,0	12	063521250480	**MSN2113**
KA (RB_)								
1.3 i	BAA, J4D, J4K, J4M, J4N, J4P,J4S	44	09/1996 → 11/2008		1,1	12	063280006010	**MSN8006**
1.3 i	JJB	37	09/1996 → 10/2002		1,1	12	063280006010	**MSN8006**
1.3 i	JJD, JJF, JJG, JJH, JJL	36	06/1998 → 11/2008		1,1	12	063280006010	**MSN8006**
KUGA								
2.0 TDCi	G6DG, UKDA	100	03/2008 →		2,2	12	063280036010	**MSN8036**
2.0 TDCi 4x4	G6DG, UKDA	100	03/2008 →		2,2	12	063280036010	**MSN8036**
MAVERICK								
3.0 V6 24V	AJ	145	02/2001 →		1,4	12	063280032010	**MSN8032**
MONDEO I (GBP)								
1.6 i 16V		65	07/1994 → 08/1996		1,4	12	063280005010	**MSN8005**
1.6 i 16V		66	02/1993 → 08/1996		1,4	12	063280005010	**MSN8005**
1.8 i 16V		82	07/1994 → 08/1996		1,4	12	063280005010	**MSN8005**
1.8 i 16V		85	02/1993 → 08/1996		1,4	12	063280005010	**MSN8005**
1.8 i 16V 4x4		85	02/1993 → 08/1996		1,4	12	063280005010	**MSN8005**
1.8 TD	RFM, RFN	66	10/1995 → 07/1996		1,9	12	063521101040	**MSN2086**
1.8 TD	RFM, RFN	65	06/1993 → 07/1996		1,9	12	063521101040	**MSN2086**
1.8 TD		65	06/1993 → 08/1996		2,2	12	063280008010	**MSN8008**
1.8 TD		66	10/1995 → 08/1996		2,2	12	063280008010	**MSN8008**
2.0 i 16V		100	02/1993 → 08/1996		1,4	12	063280005010	**MSN8005**
2.0 i 16V 4x4		97	12/1994 → 08/1996		1,4	12	063280005010	**MSN8005**
2.5 i 24V	SEA	125	07/1994 → 08/1996		1,4	12	063280032010	**MSN8032**
MONDEO I Station wagon (BNP)								
1.6 i 16V		65	07/1994 → 08/1996		1,4	12	063280005010	**MSN8005**
1.6 i 16V		66	04/1993 → 08/1996		1,4	12	063280005010	**MSN8005**
1.8 i 16V		85	04/1993 → 08/1996		1,4	12	063280005010	**MSN8005**
1.8 i 16V		82	07/1994 → 08/1996		1,4	12	063280005010	**MSN8005**

		kW			kW	V	LONG	SHORT
FORD								
MONDEO I Station wagon (BNP)								
1.8 i 16V 4x4		85	04/1993 → 08/1996		1,4	12	063280005010	**MSN8005**
1.8 TD	RFM, RFN	66	11/1995 → 07/1996		1,9	12	063521101040	**MSN2086**
1.8 TD	RFM, RFN	65	06/1993 → 07/1996		1,9	12	063521101040	**MSN2086**
1.8 TD		66	11/1995 → 08/1996		2,2	12	063280008010	**MSN8008**
1.8 TD		65	06/1993 → 08/1996		2,2	12	063280008010	**MSN8008**
2.0 i 16V		100	04/1993 → 08/1996		1,4	12	063280005010	**MSN8005**
2.0 i 16V		97	01/1993 → 08/1996		1,4	12	063280005010	**MSN8005**
2.0 i 16V 4x4		97	12/1994 → 08/1996		1,4	12	063280005010	**MSN8005**
2.5 i 24V	SEA	125	07/1994 → 08/1996		1,4	12	063280032010	**MSN8032**
MONDEO I Tre volumi (GBP)								
1.6 i 16V		65	07/1994 → 08/1996		1,4	12	063280005010	**MSN8005**
1.6 i 16V		66	02/1993 → 08/1996		1,4	12	063280005010	**MSN8005**
1.8 i 16V		82	01/1994 → 08/1996		1,4	12	063280005010	**MSN8005**
1.8 i 16V		85	02/1993 → 08/1996		1,4	12	063280005010	**MSN8005**
1.8 TD	RFM, RFN	65	06/1993 → 07/1996		1,9	12	063521101040	**MSN2086**
1.8 TD	RFM, RFN	66	10/1995 → 07/1996		1,9	12	063521101040	**MSN2086**
1.8 TD		65	06/1993 → 08/1996		2,2	12	063280008010	**MSN8008**
1.8 TD		66	10/1995 → 08/1996		2,2	12	063280008010	**MSN8008**
2.0 i 16V		100	02/1993 → 08/1996		1,4	12	063280005010	**MSN8005**
2.0 i 16V 4x4		97	12/1994 → 08/1996		1,4	12	063280005010	**MSN8005**
2.5 i 24V	SEA	125	07/1994 → 08/1996		1,4	12	063280032010	**MSN8032**
MONDEO II (BAP)								
1.6 i		66	09/1996 → 11/2000		1,4	12	063280005010	**MSN8005**
1.6 i 16V		70	05/1998 → 11/2000		1,4	12	063280005010	**MSN8005**
1.8 i		85	09/1996 → 11/2000		1,4	12	063280005010	**MSN8005**
1.8 TD	RFN	66	09/1996 → 11/2000		1,1	12	063280006010	**MSN8006**
1.8 TD		66	09/1996 → 11/2000		2,2	12	063280008010	**MSN8008**
2.0 i		96	09/1996 → 11/2000		1,4	12	063280005010	**MSN8005**
2.5 24V	SEA	125	09/1996 → 11/2000		1,4	12	063280032010	**MSN8032**
2.5 24V	SEB, SEC	125	06/2000 → 11/2000		1,4	12	063280032010	**MSN8032**
MONDEO II Station wagon (BNP)								
1.6 i		66	09/1996 → 11/2000		1,4	12	063280005010	**MSN8005**
1.6 i 16V		70	05/1998 → 11/2000		1,4	12	063280005010	**MSN8005**
1.8 i		85	09/1996 → 11/2000		1,4	12	063280005010	**MSN8005**
1.8 TD	RFN	66	09/1996 → 11/2000		1,1	12	063280006010	**MSN8006**
1.8 TD		66	09/1996 → 11/2000		2,2	12	063280008010	**MSN8008**
2.0 i		96	09/1996 → 11/2000		1,4	12	063280005010	**MSN8005**
2.5 24V	SEA	125	09/1996 → 11/2000		1,4	12	063280032010	**MSN8032**
2.5 24V	SEB, SEC	125	06/2000 → 11/2000		1,4	12	063280032010	**MSN8032**
MONDEO II Tre volumi (BFP)								
1.6 i		66	09/1996 → 11/2000		1,4	12	063280005010	**MSN8005**
1.6 i 16V		70	05/1998 → 11/2000		1,4	12	063280005010	**MSN8005**
1.8 i		85	09/1996 → 11/2000		1,4	12	063280005010	**MSN8005**
1.8 TD	RFN	66	09/1996 → 11/2000		1,1	12	063280006010	**MSN8006**

		kW			kW	V	LONG	SHORT
FORD								
MONDEO II Tre volumi (BFP)								
1.8 TD		66	09/1996 → 11/2000		2,2	12	063280008010	**MSN8008**
2.0 i		96	09/1996 → 11/2000		1,4	12	063280005010	**MSN8005**
2.5 24V	SEA	125	09/1996 → 11/2000		1,4	12	063280032010	**MSN8032**
2.5 24V	SEB, SEC	125	06/2000 → 11/2000		1,4	12	063280032010	**MSN8032**
MONDEO III (B5Y)								
1.8 16V	CGBA, CGBB	81	11/2000 → 08/2007		1,4	12	063280023010	**MSN8023**
1.8 16V	CHBA, CHBB	92	11/2000 → 08/2007		1,4	12	063280023010	**MSN8023**
1.8 SCi	CFBA	96	06/2003 → 08/2007		1,4	12	063280023010	**MSN8023**
2.0 16V	CJBA, CJBB	107	11/2000 → 08/2007		1,4	12	063280023010	**MSN8023**
2.0 16V DI / TDDi / TDCi	D5BA, SDBA	66	11/2000 → 08/2007		1,9	12	063280022010	**MSN8022**
2.0 16V TDDi / TDCi	D6BA, HJBA, HJBB, HJBC	85	11/2000 → 08/2007		1,9	12	063280022010	**MSN8022**
2.0 TDCi	FMBA, N7BA	96	10/2001 → 08/2007		1,9	12	063280022010	**MSN8022**
2.2 TDCi	QJBA, QJBB	114	09/2004 → 08/2007		1,9	12	063280022010	**MSN8022**
2.5 V6 24V	LCBD	125	11/2000 → 08/2007		2,2	12	063280031010	**MSN8031**
2.5 V6 24V	LCBD	125	11/2000 → 08/2007		1,4	12	063280032010	**MSN8032**
3.0 V6 24V	REBA	150	09/2004 → 08/2007		2,2	12	063280031010	**MSN8031**
ST220	MEBA	166	04/2002 → 08/2007		2,2	12	063280031010	**MSN8031**
ST220	MEBA	166	04/2002 → 08/2007		1,4	12	063280032010	**MSN8032**
MONDEO III Station wagon (BWY)								
1.8 16V	CGBA, CGBB	81	11/2000 → 08/2007		1,4	12	063280023010	**MSN8023**
1.8 16V	CHBA, CHBB	92	11/2000 → 08/2007		1,4	12	063280023010	**MSN8023**
1.8 SCi	CFBA	96	06/2003 → 08/2007		1,4	12	063280023010	**MSN8023**
2.0 16V	CJBA, CJBB	107	11/2000 → 08/2007		1,4	12	063280023010	**MSN8023**
2.0 16V DI / TDDi / TDCi	D5BA, SDBA	66	11/2000 → 08/2007		1,9	12	063280022010	**MSN8022**
2.0 16V TDDi / TDCi	D6BA, HJBA, HJBB, HJBC	85	11/2000 → 08/2007		1,9	12	063280022010	**MSN8022**
2.0 TDCi	FMBA, N7BA	96	10/2001 → 08/2007		1,9	12	063280022010	**MSN8022**
2.2 TDCi	QJBA, QJBB	114	09/2004 → 08/2007		1,9	12	063280022010	**MSN8022**
2.5 V6 24V	LCBD	125	11/2000 → 08/2007		2,2	12	063280031010	**MSN8031**
2.5 V6 24V	LCBD	125	11/2000 → 08/2007		1,4	12	063280032010	**MSN8032**
3.0 V6 24V	REBA	150	09/2004 → 08/2007		2,2	12	063280031010	**MSN8031**
ST220	MEBA	166	04/2002 → 08/2007		2,2	12	063280031010	**MSN8031**
ST220	MEBA	166	04/2002 → 08/2007		1,4	12	063280032010	**MSN8032**
MONDEO III Tre volumi (B4Y)								
1.8 16V	CGBA, CGBB	81	11/2000 → 08/2007		1,4	12	063280023010	**MSN8023**
1.8 16V	CHBA, CHBB	92	11/2000 → 08/2007		1,4	12	063280023010	**MSN8023**
1.8 SCi	CFBA	96	06/2003 → 08/2007		1,4	12	063280023010	**MSN8023**
2.0 16V	CJBA, CJBB	107	11/2000 → 08/2007		1,4	12	063280023010	**MSN8023**
2.0 16V DI / TDDi / TDCi	D5BA, SDBA	66	11/2000 → 08/2007		1,9	12	063280022010	**MSN8022**
2.0 16V TDDi / TDCi	D6BA, HJBA, HJBB, HJBC	85	11/2000 → 08/2007		1,9	12	063280022010	**MSN8022**
2.0 TDCi	FMBA, N7BA	96	10/2001 → 08/2007		1,9	12	063280022010	**MSN8022**
2.2 TDCi	QJBA, QJBB	114	09/2004 → 08/2007		1,9	12	063280022010	**MSN8022**

		kW		i	kW	V	LONG	SHORT
FORD								
MONDEO III Tre volumi (B4Y)								
2.5 V6 24V	LCBD	125	11/2000 → 08/2007		2,2	12	063280031010	**MSN8031**
2.5 V6 24V	LCBD	125	11/2000 → 08/2007		1,4	12	063280032010	**MSN8032**
3.0 V6 24V	REBA	150	09/2004 → 08/2007		2,2	12	063280031010	**MSN8031**
ST220	MEBA	166	04/2002 → 08/2007		2,2	12	063280031010	**MSN8031**
ST220	MEBA	166	04/2002 → 08/2007		1,4	12	063280032010	**MSN8032**
MONDEO IV								
2.0 TDCi	AZBA	96	03/2007 →		2,2	12	063280036010	**MSN8036**
2.0 TDCi	KLBA, LPBA, TYBA	85	11/2007 →		2,2	12	063280036010	**MSN8036**
2.0 TDCi	QXBB, UFBA	103	03/2007 →		2,2	12	063280036010	**MSN8036**
MONDEO IV Tre volumi								
2.0 TDCi	AZBA	96	03/2007 →		2,2	12	063280036010	**MSN8036**
2.0 TDCi	KLBA, LPBA, TYBA	85	11/2007 →		2,2	12	063280036010	**MSN8036**
2.0 TDCi	QXBB, UFBA	103	03/2007 →		2,2	12	063280036010	**MSN8036**
MONDEO IV Turnier								
2.0 TDCi	AZBA	96	03/2007 →		2,2	12	063280036010	**MSN8036**
2.0 TDCi	KLBA, LPBA, TYBA	85	11/2007 →		2,2	12	063280036010	**MSN8036**
2.0 TDCi	QXBB, UFBA	103	03/2007 →		2,2	12	063280036010	**MSN8036**
ORION I (AFD)								
1.3	JPA	51	07/1983 → 03/1986		1,4	12	063280014010	**MSN8014**
1.6	LP1, LPA	58	07/1983 → 03/1986		1,4	12	063280014010	**MSN8014**
1.6 D	LTA	40	04/1984 → 12/1985		1,9	12	063521101040	**MSN2086**
1.6 i	LR1, LRA	77	07/1983 → 03/1986		1,4	12	063280014010	**MSN8014**
ORION II (AFF)								
1.6 D	LTC	40	04/1986 → 01/1989		1,9	12	063521101040	**MSN2086**
1.8 D	RTA, RTB	44	01/1989 → 07/1990		1,9	12	063521101040	**MSN2086**
ORION III (GAL)								
1.4	F6F, F6G	52	07/1990 → 12/1993		1,4	12	063280014010	**MSN8014**
1.4	FUH	54	07/1990 → 12/1993		1,4	12	063280014010	**MSN8014**
1.6	LUJ, LUK	66	07/1990 → 12/1992		1,4	12	063280014010	**MSN8014**
1.6 i	LJF	77	07/1990 → 09/1992		1,4	12	063280014010	**MSN8014**
1.8 TD	RFD, RFK	66	03/1993 → 12/1993		1,9	12	063521101040	**MSN2086**
PUMA (EC_)								
1.6 16V	L1W	76	08/2000 →		1,2	12	063280010010	**MSN8010**
1.7 16V	MHA, MHB	92	03/1997 →		1,2	12	063280010010	**MSN8010**
ST 160		118	06/1999 →		1,2	12	063280010010	**MSN8010**
S-MAX								
2.0 TDCi	AZWA	96	05/2006 →		2,2	12	063280036010	**MSN8036**
2.0 TDCi	KLWA, TYWA	85	11/2007 →		2,2	12	063280036010	**MSN8036**
2.0 TDCi	QXWA, QXWB, QXWC, UFWA	103	05/2006 →		2,2	12	063280036010	**MSN8036**
TOURNEO CONNECT								
1.8 16V		85	06/2002 →		1,4	12	063280005010	**MSN8005**
1.8 Di	BHPA, P7PA, P7PB, R2PA	55	06/2002 →		1,4	12	063280034010	**MSN8034**

		kW			kW	V	LONG	SHORT
FORD								
TOURNEO CONNECT								
1.8 TDCi	RWPA	81	08/2006 →		1,4	12	063280034010	**MSN8034**
1.8 Turbo Di	HCPA, HCPB	66	06/2002 →		1,4	12	063280034010	**MSN8034**
TRANSIT Autobus								
2.4 TDCi	H9FD	103	07/2006 →		1,9	12	063280022010	**MSN8022**
2.4 TDCi	JXFA, JXFC	85	07/2006 →		1,9	12	063280022010	**MSN8022**
2.4 TDCi	PHFA, PHFC	74	07/2006 →		1,9	12	063280022010	**MSN8022**
2.4 TDCi 4 ruote motrici	H9FB	103	11/2006 →		1,9	12	063280022010	**MSN8022**
TRANSIT Autobus (72E, 73E)								
2.3 D FT 100 (72E2X)		46	11/1971 → 09/1978		3,0	12	063280020010	**MSN8020**
TRANSIT Autobus (E_ _)								
2.5 DI (EBL, ECL, EDS, EDL)	4HB, 4HC	56	07/1994 → 12/1996		2,8	12	063227501010	**MSN207**
2.5 DI (EBL, ECL, EDS, EDL)	4HB, 4HC	56	07/1994 → 03/2000		3,0	12	063280020010	**MSN8020**
2.5 DI (EBL, EDL, EDS, ESL, ESS)	4ED	85	08/1997 → 03/2000		3,0	12	063280020010	**MSN8020**
2.5 DI (EBL, EDS, ESL, ESS, EUS)	4FA, 4FB, 4FC, 4FD	51	08/1994 → 12/1996		2,8	12	063227501010	**MSN207**
2.5 DI (EBL, EDS, ESL, ESS, EUS)	4FA, 4FB, 4FC, 4FD	51	08/1994 → 03/2000		3,0	12	063280020010	**MSN8020**
2.5 DI (EBS, EDS, EDL, ESS, EUS)	4BC, 4CC, 4FA	51	08/1991 → 07/1994		2,8	12	063227501010	**MSN207**
2.5 DI (EBS, EDS, EDL, ESS, EUS)	4BC, 4CC, 4FA	51	08/1991 → 07/1994		3,0	12	063280020010	**MSN8020**
2.5 DI (EBS, EDS, EGL, ESS, EUS)	4DA	59	09/1991 → 07/1994		2,8	12	063227501010	**MSN207**
2.5 DI (EBS, EDS, EGL, ESS, EUS)	4DA	59	09/1991 → 07/1994		3,0	12	063280020010	**MSN8020**
2.5 TD (EB_, ED_, ES_)	4HA, 4HD	55	08/1994 → 06/2000		3,0	12	063280020010	**MSN8020**
2.5 TD (EBL, EDL, EDS, EGL, ESL, ESS, EUS)	4GA, 4GB, 4GC, 4GD, 4GE, 4GF	63	01/1995 → 03/2000		3,0	12	063280020010	**MSN8020**
2.5 TD (EBS, EBL, ECL, EDS, EDL, ESS, EUS)	4GA, 4GB, 4GC	63	10/1992 → 07/1994		3,0	12	063280020010	**MSN8020**
2.5 TD (ECL, EDL, EDS, ESL, ESS, EUS)	4EB, 4EC	74	07/1994 → 03/2000		3,0	12	063280020010	**MSN8020**
2.5 TD (ECL, EDS, EDL, EGL, ESS, EUS)	4EA	74	09/1991 → 07/1994		3,0	12	063280020010	**MSN8020**
TRANSIT Autobus (FD_ _, FB_ _, FS_ _, FZ_ _, FC_ _)								
2.0 DI (F_E_, F_F_, F_G_)	ABFA	74	08/2000 → 05/2006		1,9	12	063280022010	**MSN8022**
2.0 DI (F_E_, F_F_, F_G_)	D3FA	55	08/2000 → 05/2006		1,9	12	063280022010	**MSN8022**
2.0 DI (F_E_, F_F_, F_G_)	F3FA	63	08/2000 → 05/2006		1,9	12	063280022010	**MSN8022**
2.0 TDCi (F_F_, F_E_, F_G_)	FIFA	92	08/2002 → 05/2006		1,9	12	063280022010	**MSN8022**

		kW			kW	V	LONG	SHORT
FORD								
TRANSIT Autobus (FD_ _, FB_ _, FS_ _, FZ_ _, FC_ _)								
2.4 DI (F_B_, F_C_, F_A_)	D2FA, D2FB, D2FE	66	01/2000 → 05/2006		1,9	12	063280022010	**MSN8022**
2.4 DI (RWD) (F_B_, F_C_)	F4FA	55	01/2000 → 05/2006		1,9	12	063280022010	**MSN8022**
2.4 DI (RWD) (F_B_, F_C_, F_A_)	D4FA	88	01/2000 → 05/2006		1,9	12	063280022010	**MSN8022**
2.4 TD	F4FA	55	08/2000 → 08/2003		1,9	12	063280022010	**MSN8022**
2.4 TDCi	H9FA	101	03/2004 → 05/2006		1,9	12	063280022010	**MSN8022**
2.4 TDdi	D2FE	66	10/2001 → 03/2006		1,9	12	063280022010	**MSN8022**
2.4 TDdi	D4FA	88	08/2000 → 08/2003		1,9	12	063280022010	**MSN8022**
2.4 TDE	FXFA	85	03/2004 → 05/2006		1,9	12	063280022010	**MSN8022**
2.4 TDE (F_C_, F_B_, F_A_)	DOFA	92	07/2001 → 05/2006		1,9	12	063280022010	**MSN8022**
TRANSIT Autobus (T_ _)								
2.5 D (TBS, TCL, TCS, TEL, TES)	4AB	50	12/1985 → 01/1989		3,0	12	063280020010	**MSN8020**
2.5 D (TBS, TEL, TES)	4AB, 4BA, 4CA	52	09/1988 → 09/1992		3,0	12	063280020010	**MSN8020**
TRANSIT Autobus (V_ _)								
2.4 D (VAS, VBL, VIL, VUL, VZS)	4AA	46	12/1977 → 10/1986		3,0	12	063280020010	**MSN8020**
2.5 D (VAS, VBL, VIL, VUL, VZS)	4AB	50	10/1983 → 10/1986		3,0	12	063280020010	**MSN8020**
TRANSIT CONNECT (P65_, P70_, P80_)								
1.8 16V		85	09/2002 →		1,8	12	063187051010	**MSN870**
1.8 16V		85	06/2002 →		1,4	12	063280005010	**MSN8005**
1.8 Di	BHPA, P7PA, P7PB, R2PA	55	06/2002 →		1,4	12	063280034010	**MSN8034**
1.8 Di		55	09/2002 →		1,8	12	063187051010	**MSN870**
1.8 TDCi	HCPA, HCPB	66	06/2002 →		1,4	12	063280034010	**MSN8034**
1.8 TDCi	RWPA	81	08/2006 →		1,4	12	063280034010	**MSN8034**
1.8 TDCi		66	09/2002 →		1,8	12	063187051010	**MSN870**
TRANSIT Furgonato								
2.3 16V	GZFA, GZFC	107	07/2006 →		1,2	12	063280027010	**MSN8027**
TRANSIT Furgonato (E_ _)								
2.5 DI (EAL, EAS)	4BC, 4CC, 4FA	51	05/1991 → 06/1994		2,8	12	063227501010	**MSN207**
2.5 DI (EAL, EAS)	4ED	85	05/1999 → 03/2000		3,0	12	063280020010	**MSN8020**
2.5 DI (EAL, EAS)	4FA, 4FB, 4FC, 4FD	51	06/1994 → 12/1996		2,8	12	063227501010	**MSN207**
2.5 DI (EAL, EAS)	4FA, 4FB, 4FC, 4FD	51	06/1994 → 03/2000		3,0	12	063280020010	**MSN8020**
2.5 DI (EAL, EAS)	4GA	63	10/1992 → 06/1994		2,8	12	063227501010	**MSN207**
2.5 DI (EAL, EAS)	4HB, 4HC	56	06/1994 → 12/1996		2,8	12	063227501010	**MSN207**
2.5 DI (EAL, EAS)	4HB, 4HC	56	06/1994 → 03/2000		3,0	12	063280020010	**MSN8020**
2.5 DI (EAS, EAL)	4DA	59	05/1991 → 06/1994		2,8	12	063227501010	**MSN207**
2.5 TD (EAL, EAS)	4GA, 4GB, 4GC, 4GD, 4GE, 4GF	63	06/1994 → 03/2000		3,0	12	063280020010	**MSN8020**
2.5 TD (EAS)	4HA, 4HD	55	10/1998 → 03/2000		3,0	12	063280020010	**MSN8020**
2.5 TDI (EAL, EAS)	4EB, 4EC	74	06/1994 → 03/2000		3,0	12	063280020010	**MSN8020**

		kW			kW	V	LONG	SHORT
FORD								
TRANSIT Furgonato (FA_ _)								
2.0 DI (FAE_, FAF_, FAG_)	D3FA	55	08/2000 → 05/2006		1,9	12	063280022010	**MSN8022**
2.0 DI (FAE_, FAF_, FAG_)	F3FA	63	08/2000 → 05/2006		1,9	12	063280022010	**MSN8022**
2.0 DI (FAE_, FAF_, FAG_)		74	08/2000 → 05/2006		1,9	12	063280022010	**MSN8022**
2.0 TDCi	FIFA	92	08/2002 → 05/2006		1,9	12	063280022010	**MSN8022**
2.4 DI (FAA_, FAB_, FAC_, FAD_)	D2FA, D2FB, D2FE	66	01/2000 → 05/2006		1,9	12	063280022010	**MSN8022**
2.4 DI (RWD) (FAA_, FAB_, FAC_, FAD_)	F4FA	55	01/2000 → 05/2006		1,9	12	063280022010	**MSN8022**
2.4 DI (RWD) (FAA_, FAB_, FAC_, FAD_)		88	01/2000 → 05/2006		1,9	12	063280022010	**MSN8022**
2.4 TD	F4FA	55	08/2000 → 08/2003		1,9	12	063280022010	**MSN8022**
2.4 TD 4 ruote motrici	F4FA	55	08/2000 → 08/2003		1,9	12	063280022010	**MSN8022**
2.4 TDCi	H9FA	101	03/2004 → 05/2006		1,9	12	063280022010	**MSN8022**
2.4 TDdi	D4FA	88	08/2000 → 08/2003		1,9	12	063280022010	**MSN8022**
2.4 TDdi		66	10/2000 → 03/2006		1,9	12	063280022010	**MSN8022**
2.4 TDdi		88	08/2000 → 08/2003		1,9	12	063280022010	**MSN8022**
2.4 TDE	DOFA	92	07/2001 → 05/2006		1,9	12	063280022010	**MSN8022**
2.4 TDE	FXFA	85	03/2004 → 05/2006		1,9	12	063280022010	**MSN8022**
TRANSIT Furgonato (T_ _)								
2.5 D (TAL, TAS, TGL, TWS)	4AB	50	01/1986 → 09/1991		2,8	12	063227501010	**MSN207**
2.5 D (TAL, TAS, TGL, TWS)	4AB	50	01/1986 → 09/1991		3,0	12	063280020010	**MSN8020**
2.5 D (TAL, TAS, TGL, TWS)	4BA, 4CA	52	10/1988 → 09/1991		3,0	12	063280020010	**MSN8020**
TRANSIT Furgonato (V_ _)								
2.4 D (VVS)	4AA	46	04/1978 → 05/1984		2,8	12	063227501010	**MSN207**
2.4 D (VVS)	4AA	46	11/1977 → 10/1986		3,0	12	063280020010	**MSN8020**
2.5 D (VVL)	4AB	50	01/1984 → 10/1986		2,8	12	063227501010	**MSN207**
2.5 D (VVL)	4AB	50	10/1983 → 10/1986		3,0	12	063280020010	**MSN8020**
TRANSIT Pianale piatto/Telaio								
2.4 TDCi	H9FD	103	07/2006 →		1,9	12	063280022010	**MSN8022**
2.4 TDCi	JXFA, JXFC	85	07/2006 →		1,9	12	063280022010	**MSN8022**
2.4 TDCi	PHFA, PHFC	74	07/2006 →		1,9	12	063280022010	**MSN8022**
2.4 TDCi 4 ruote motrici	H9FB	103	11/2006 →		1,9	12	063280022010	**MSN8022**
TRANSIT Pianale piatto/Telaio (E_ _)								
2.5 DI (EME/L/S, ENE/L/S)	4DA	59	09/1991 → 08/1994		2,8	12	063227501010	**MSN207**
2.5 DI (EME/L/S, ENE/L/S)	4HB, 4HC	56	08/1994 → 12/1996		2,8	12	063227501010	**MSN207**
2.5 DI (EME/L/S, ENE/L/S)	4HB, 4HC	56	08/1994 → 03/2000		3,0	12	063280020010	**MSN8020**
2.5 DI (EML, ENE/L)	4ED	85	05/1999 → 03/2000		3,0	12	063280020010	**MSN8020**
2.5 DI (EML/S, ENL/S)	4BC, 4CC, 4FA	51	09/1991 → 08/1994		2,8	12	063227501010	**MSN207**
2.5 DI (EML/S, ENL/S)	4FA, 4FB, 4FC, 4FD	51	08/1994 → 12/1996		2,8	12	063227501010	**MSN207**
2.5 DI (EML/S, ENL/S)	4FA, 4FB, 4FC, 4FD	51	08/1994 → 03/2000		3,0	12	063280020010	**MSN8020**
2.5 TD (EME/L/S, ENE/L/S)	4EB, 4EC	74	08/1994 → 03/2000		3,0	12	063280020010	**MSN8020**
2.5 TD (EME/L/S, ENE/L/S)	4GA, 4GB, 4GC, 4GD, 4GE, 4GF	63	08/1994 → 03/2000		3,0	12	063280020010	**MSN8020**
2.5 TD (EME/L/S, ENE/L/S)	4HA, 4HD	55	10/1998 →		3,0	12	063280020010	**MSN8020**

		kW		i	kW	V	LONG	SHORT
FORD								
TRANSIT Pianale piatto/Telaio (FM_ _, FN_ _)								
2.0 DI (F_E_, F_F_)	ABFA	74	08/2000 → 05/2006		1,9	12	063280022010	**MSN8022**
2.0 DI (F_E_, F_F_)	D3FA	55	08/2000 → 05/2006		1,9	12	063280022010	**MSN8022**
2.0 DI (F_E_, F_F_)	F3FA	63	08/2000 → 05/2006		1,9	12	063280022010	**MSN8022**
2.0 TDCi (F_E_, F_F_)	FIFA	92	08/2002 → 05/2006		1,9	12	063280022010	**MSN8022**
2.3	E5FC	105	03/2001 → 03/2006		1,2	12	063280027010	**MSN8027**
2.3 16V (F_A_, F_B_, F_C_, F_D_)	E5FA, E5FC	107	04/2001 → 05/2006		1,2	12	063280027010	**MSN8027**
2.4 DI (F_A_, F_B_, F_C_, F_D_)	D2FA, D2FB, D2FE	66	01/2000 → 05/2006		1,9	12	063280022010	**MSN8022**
2.4 DI (F_A_, F_B_, F_C_, F_D_)	D4FA	88	01/2000 → 05/2006		1,9	12	063280022010	**MSN8022**
2.4 DI (F_A_, F_B_, F_C_, F_D_)	F4FA	55	01/2000 → 05/2006		1,9	12	063280022010	**MSN8022**
2.4 TDCi	H9FA	101	03/2004 → 05/2006		1,9	12	063280022010	**MSN8022**
2.4 TDdi	D4FA	88	08/2000 → 08/2003		1,9	12	063280022010	**MSN8022**
2.4 TDE	DOFA	92	07/2001 → 05/2006		1,9	12	063280022010	**MSN8022**
2.4 TDE	FXFA	85	03/2004 → 05/2006		1,9	12	063280022010	**MSN8022**
TRANSIT Pianale piatto/Telaio (T_ _)								
2.5 D (TTL, TTS, TUL, TUS, TTE) Cat.	4AB	50	01/1986 → 01/1989		2,8	12	063227501010	**MSN207**
2.5 D (TTL, TTS, TUL, TUS, TTE) Cat.	4AB	50	01/1986 → 01/1989		3,0	12	063280020010	**MSN8020**
2.5 DI (TTE, TTL, TTS, TUL)	4BA, 4CA	52	09/1988 → 12/1991		2,8	12	063227501010	**MSN207**
2.5 DI (TTE, TTL, TTS, TUL)	4BA, 4CA	52	09/1988 → 09/1992		3,0	12	063280020010	**MSN8020**
TRANSIT Pianale piatto/Telaio (V_ _)								
2.4 D (VGL, VSL, VTL, VCS, VDS)	4AA	46	04/1978 → 05/1984		2,8	12	063227501010	**MSN207**
2.4 D (VGL, VSL, VTL, VCS, VDS)	4AA	46	11/1977 → 09/1985		3,0	12	063280020010	**MSN8020**
2.5 D (VGL, VSL, VTL, VCS, VDS)	4AB	50	01/1984 → 10/1986		2,8	12	063227501010	**MSN207**
2.5 D (VGL, VSL, VTL, VCS, VDS)	4AB	50	10/1983 → 10/1986		3,0	12	063280020010	**MSN8020**
TRANSIT TOURNEO								
2.5 DI	4FA, 4FB, 4FC, 4FD	51	11/1994 → 12/2000		3,0	12	063280020010	**MSN8020**
2.5 DI	4HA, 4HB, 4HC	56	11/1994 → 12/2000		3,0	12	063280020010	**MSN8020**
2.5 TD	4GA, 4GB, 4GC	63	11/1994 → 12/2000		3,0	12	063280020010	**MSN8020**
FSO								
127P								
0.9		33	04/1971 → 10/1976		0,8	12	063222908010	**MSN290**
HYUNDAI								
ACCENT II (LC)								
1.3	G4E-A	55	01/2000 →		1,0	12	063280901010	**MSN882**
1.3	G4E-A	63	01/2000 →		1,0	12	063280901010	**MSN882**

		kW			kW	V	LONG	SHORT
HYUNDAI								
ACCENT II (LC)								
1.3	G4E-A	55	01/2000 → 12/2003		0,9	12	063522620010	**MSN2620**
1.3		62	08/2002 →		1,0	12	063280901010	**MSN882**
1.3		61	01/2000 →		1,0	12	063280901010	**MSN882**
1.3		62	08/2002 →		1,0	12	063280902010	**MSN883**
1.3		61	01/2000 →		1,0	12	063280902010	**MSN883**
1.3		55	01/2000 →		1,0	12	063280902010	**MSN883**
1.3		63	01/2000 →		1,0	12	063280902010	**MSN883**
1.3		62	02/2003 →		0,9	12	063522605010	**MSN2605**
1.3		61	01/2000 → 12/2003		0,9	12	063522620010	**MSN2620**
1.5	G4EB	66	01/2000 →		1,0	12	063280901010	**MSN882**
1.5	G4EC-G	75	09/2000 →		1,0	12	063280901010	**MSN882**
1.5		75	09/2000 →		1,0	12	063280902010	**MSN883**
1.5		66	01/2000 →		1,0	12	063280902010	**MSN883**
1.6	G4ED-G	77	12/2002 →		1,0	12	063280901010	**MSN882**
1.6		77	12/2002 →		1,0	12	063280902010	**MSN883**
ACCENT III (MC)								
1.4 GL	G4EE	71	11/2005 →		1,0	12	063280901010	**MSN882**
1.4 GL		71	11/2005 →		1,0	12	063280902010	**MSN883**
1.5 CRDi GLS		81	11/2005 →		1,0	12	063280902010	**MSN883**
1.6 GLS	G4ED	82	11/2005 →		1,0	12	063280901010	**MSN882**
1.6 GLS		82	11/2005 →		1,0	12	063280902010	**MSN883**
ACCENT Tre volumi (LC)								
1.3	G4E-A	55	01/2000 → 11/2005		1,0	12	063280901010	**MSN882**
1.3	G4E-A	63	01/2000 → 11/2005		1,0	12	063280901010	**MSN882**
1.3		63	01/2000 → 11/2005		1,0	12	063280902010	**MSN883**
1.3		55	01/2000 → 11/2005		1,0	12	063280902010	**MSN883**
1.5	G4EB	66	01/2000 → 11/2005		1,0	12	063280901010	**MSN882**
1.5		66	01/2000 → 11/2005		1,0	12	063280902010	**MSN883**
1.5		75	09/1999 → 10/2002		1,0	12	063280902010	**MSN883**
1.6	G4ED-G	77	12/2002 → 11/2005		1,0	12	063280901010	**MSN882**
1.6		77	12/2002 → 11/2005		1,0	12	063280902010	**MSN883**
ACCENT Tre volumi (MC)								
1.4 GL	G4EE	71	11/2005 →		1,0	12	063280901010	**MSN882**
1.4 GL		71	11/2005 →		1,0	12	063280902010	**MSN883**
1.5 CRDi GLS		81	11/2005 →		1,0	12	063280902010	**MSN883**
1.6 GLS	G4ED	82	11/2005 →		1,0	12	063280901010	**MSN882**
1.6 GLS		82	11/2005 →		1,0	12	063280902010	**MSN883**
ATOS (MX)								
1.0 i	G4HC-E	43	03/2001 →		0,9	12	063522611010	**MSN2611**
1.1	G4HG	46	03/2004 →		0,9	12	063522611010	**MSN2611**
ATOS PRIME (MX)								
1.0 i	G4HC-E	43	03/2001 →		0,9	12	063522611010	**MSN2611**

		kW		i	kW	V	LONG	SHORT
HYUNDAI								
ATOS PRIME (MX)								
1.1	G4HD	43	06/2003 →		0,9	12	063522611010	**MSN2611**
1.1		43	06/2003 →		1,0	12	063280902010	**MSN883**
COUPE (GK)								
1.6 16V	G4ED-G	79	03/2002 →		1,0	12	063280901010	**MSN882**
1.6 16V	G4ED-G	77	03/2002 →		1,0	12	063280901010	**MSN882**
1.6 16V	G4ED-G	77	03/2002 →		0,9	12	063522605010	**MSN2605**
1.6 16V	G4ED-G	79	03/2002 →		0,9	12	063522605010	**MSN2605**
COUPE (RD)								
1.6 i 16V	4G61	84	12/1996 → 12/2000		0,9	12	063522620010	**MSN2620**
2.0 16V	G4GF	102	08/1996 → 04/2002		1,2	12	063522621010	**MSN2621**
ELANTRA (XD)								
1.6	G4ED-G	79	06/2000 →		1,0	12	063280901010	**MSN882**
1.6	G4ED-G	77	05/2003 →		1,0	12	063280901010	**MSN882**
1.6	G4ED-G	79	06/2000 →		0,9	12	063522605010	**MSN2605**
1.6	G4ED-G	79	06/2000 →		0,9	12	063522620010	**MSN2620**
1.6	G4GA	82	09/2003 →		1,0	12	063280901010	**MSN882**
1.6		82	09/2003 →		1,0	12	063280902010	**MSN883**
1.6		77	05/2003 →		1,0	12	063280902010	**MSN883**
2.0 CRDi	D4EA	83	04/2001 →		2,0	12	063522609010	**MSN2609**
ELANTRA Tre volumi (XD)								
1.6	G4ED-G	79	06/2000 →		1,0	12	063280901010	**MSN882**
1.6	G4ED-G	77	05/2003 →		1,0	12	063280901010	**MSN882**
1.6	G4ED-G	79	06/2000 →		0,9	12	063522605010	**MSN2605**
1.6		77	05/2003 →		1,0	12	063280902010	**MSN883**
2.0 CRDi	D4EA	83	04/2001 →		2,0	12	063522609010	**MSN2609**
GALLOPER II (JK-01)								
2.5 TD		65	08/1998 → 10/2002		2,0	12	063522623010	**MSN2623**
GETZ (TB)								
1.1	G4HD	46	09/2002 →		0,9	12	063522611010	**MSN2611**
1.3	G4E-A	63	09/2003 →		1,0	12	063280901010	**MSN882**
1.3		63	09/2003 →		1,0	12	063280902010	**MSN883**
1.3 i	G4E-A	60	09/2002 →		1,0	12	063280901010	**MSN882**
1.3 i	G4E-A	60	09/2002 →		0,9	12	063522605010	**MSN2605**
1.3 i		60	09/2002 →		1,0	12	063280902010	**MSN883**
1.4 i	G4EE	71	08/2005 →		1,0	12	063280901010	**MSN882**
1.4 i		71	08/2005 →		1,0	12	063280902010	**MSN883**
1.6	G4ED-G	77	09/2002 →		1,0	12	063280901010	**MSN882**
1.6	G4ED-G	78	08/2005 →		1,0	12	063280901010	**MSN882**
1.6	G4ED-G	77	09/2002 →		0,9	12	063522605010	**MSN2605**
1.6		77	09/2002 →		1,0	12	063280902010	**MSN883**

		kW			kW	V	LONG	SHORT
HYUNDAI								
GETZ (TB)								
1.6		78	08/2005 →		1,0	12	063280902010	**MSN883**
H-1 Autobus (KMF)								
2.4	G4CS	82	10/1997 →		1,2	12	063522617010	**MSN2617**
2.4 4WD	G4CS	82	10/1997 →		1,2	12	063522617010	**MSN2617**
H-1 Furgonato								
2.4	G4CS	82	03/2000 →		1,2	12	063522617010	**MSN2617**
2.5 TD	D4BH	74	10/2001 → 07/2003		2,0	12	063522603010	**MSN2603**
2.5 TD	D4BH	74	04/2002 → 05/2004		2,0	12	063522613010	**MSN2613**
H100 Autobus (P)								
2.4	G4CS	90	07/1993 → 03/2000		1,2	12	063522617010	**MSN2617**
2.4	G4CS	84	01/1997 → 03/2000		1,2	12	063522617010	**MSN2617**
H100 Furgonato								
2.6 D		57	10/1999 →		1,4	12	063522627010	**MSN2627**
i30								
2.0	G4GC, G4GC-G	105	10/2007 →		1,2	12	063522626010	**MSN2626**
LANTRA I (J-1)								
1.6 i.e. 16V	G4CR	84	10/1990 → 11/1995		1,2	12	063522617010	**MSN2617**
1.6 i.e. 16V	G4CR	78	10/1990 → 11/1995		1,2	12	063522617010	**MSN2617**
1.8 i.e. 16V	G4CN	93	10/1990 → 04/1995		1,2	12	063522617010	**MSN2617**
LANTRA II (J-2)								
1.5 12V	G4EK	65	12/1996 → 09/2000		0,9	12	063522620010	**MSN2620**
1.6 i	G4GR	66	07/1996 → 09/2000		1,2	12	063522621010	**MSN2621**
1.8 16V	G4GM	94	07/1996 → 09/2000		1,2	12	063522621010	**MSN2621**
2.0 16V	G4GF	102	08/1996 → 09/2000		1,2	12	063522621010	**MSN2621**
MATRIX (FC)								
1.6	G4ED-G	76	06/2001 →		1,0	12	063280901010	**MSN882**
1.6	G4ED-G	76	04/2002 →		0,9	12	063522605010	**MSN2605**
1.6		76	06/2001 →		1,0	12	063280902010	**MSN883**
1.8	G4GB-G	90	06/2001 →		1,2	12	063522621010	**MSN2621**
SANTA FE (SM)								
2.0	G4BP	99	08/2001 →		1,2	12	063522619010	**MSN2619**
2.0 CRDi	D4EA	83	08/2001 →		2,0	12	063522609010	**MSN2609**
2.0 CRDi 4x4	D4EA	83	04/2001 →		2,0	12	063522609010	**MSN2609**
2.4 16V	G4JS-G	100	02/2001 →		1,2	12	063522619010	**MSN2619**
2.4 16V	G4JS-G	107	02/2001 →		1,2	12	063522619010	**MSN2619**
2.4 16V 4x4	G4JS-G	107	02/2001 →		1,2	12	063522619010	**MSN2619**
2.4 16V 4x4	G4JS-G	100	02/2001 →		1,2	12	063522619010	**MSN2619**
SANTAMO								
2.0 16V		102	05/1999 →		1,2	12	063522617010	**MSN2617**
2.0 16V		102	05/1999 → 12/2002		0,9	12	063522620010	**MSN2620**
2.0 16V 4x4		102	05/1999 →		1,2	12	063522617010	**MSN2617**
SONATA II (Y-2)								
1.8 i		70	09/1988 → 10/1993		1,2	12	063522617010	**MSN2617**
2.0 i	G4CP	74	09/1988 → 08/1991		1,2	12	063522617010	**MSN2617**

		kW		i	kW	V	LONG	SHORT
HYUNDAI								
SONATA II (Y-2)								
2.0 i	G4CP-U	80	01/1991 → 10/1993		1,2	12	063522617010	**MSN2617**
2.4 i	G4CS	83	09/1988 → 08/1991		1,2	12	063522617010	**MSN2617**
SONATA III (Y-3)								
2.0 i		70	08/1996 → 06/1998		1,2	12	063522617010	**MSN2617**
2.0 i 16V	G4CP-D	102	05/1993 → 04/1996		1,2	12	063522617010	**MSN2617**
2.0 i 16V	G4CP-DM	92	06/1996 → 06/1998		1,2	12	063522617010	**MSN2617**
SONATA IV (EF)								
2.0 16V	G4JP-G	100	06/1998 → 10/2001		1,2	12	063522619010	**MSN2619**
2.4 16V		105	03/1998 → 10/2001		1,2	12	063522619010	**MSN2619**
2.5 V6 24V	G6BV-G	118	06/1998 → 10/2001		1,2	12	063522618010	**MSN2618**
SONATA VI (YF)								
2.0 16V	G4JP-EG	96	03/2002 → 11/2004		1,2	12	063522619010	**MSN2619**
2.7 V6	G6BA	129	11/2002 → 11/2004		1,2	12	063522618010	**MSN2618**
STAREX (H1)								
2.4		101	02/2003 → 04/2004		1,8	12	063187001010	**MSN872**
2.5 TCi	D4BH	74	05/2004 →		1,8	12	063187001010	**MSN872**
2.5 TCi		103	02/2003 → 04/2004		1,8	12	063187001010	**MSN872**
2.5 TD	D4BF	59	06/1997 →		2,0	12	063522613010	**MSN2613**
2.5 TD 4WD	D4BF	59	02/1998 →		2,0	12	063522613010	**MSN2613**
TERRACAN (HP)								
2.9 CRDi 4WD		110	12/2001 →		2,2	12	063522616010	**MSN2616**
TRAJET (FO)								
2.0	G4GC-G	103	01/2004 →		1,2	12	063522619010	**MSN2619**
2.0	G4JP-G	100	03/2000 →		1,2	12	063522621010	**MSN2621**
2.0 CRDi	D4EA	83	04/2001 →		2,0	12	063522609010	**MSN2609**
2.7 V6	G6BA-G	127	09/2000 →		1,2	12	063522618010	**MSN2618**
TUCSON (JM)								
2.0	G4GC	104	08/2004 →		1,2	12	063522621010	**MSN2621**
2.0 CRDi	D4EA	83	08/2004 →		2,0	12	063522622010	**MSN2622**
2.0 CRDi 4 ruote motrici	D4EA	83	08/2004 →		2,0	12	063522622010	**MSN2622**
XG (XG)								
30/300	G6CT-G	138	12/1998 →		1,2	12	063522618010	**MSN2618**
INNOCENTI								
ELBA (146)								
1.4 i.e. (146EN, 146EQ)	146 C5.000, 146 D5.000	49	09/1994 → 12/1996		0,9	12	063223101010	**MSN274**
1.6 i.e. (146EO, 146ER)	146 C6.000, 146 D6.000	55	09/1994 → 12/1996		0,9	12	063223101010	**MSN274**
KORAL								
45	100 GL 064	33	01/1990 → 12/1992		0,8	12	063222908010	**MSN290**
IVECO								
DAILY I Autobus								
A 40-10 (95719111, 95719131, 95719311, 95719315, 95719317,..)	8140.23.	76	09/1996 → 05/1999		2,3	12	063522187740	**MSN2005**
A 40-12 (95819311, 95819315, 95819317, 95819331)	8140.43.	90	05/1996 → 05/1999		2,3	12	063522187740	**MSN2005**

		kW			kW	V	LONG	SHORT
IVECO								
DAILY I Autobus								
A 45-10 (94159111, 94159131, 94159211, 94159311, 94159315,..)	8140.27.2720	76	01/1991 → 04/1996		2,5	12	063217148010	**MSN229**
A 45-10 (94159111, 94159131, 94159211, 94159311, 94159315,..)	8140.27.2720	76	01/1991 → 04/1996		2,5	12	063217410010	**MSN242**
A 45-10 (95739111, 95739131, 95739311, 95739317, 95739331)	8140.23.	76	05/1996 → 05/1999		2,3	12	063522187740	**MSN2005**
A 45-12 (94179211, 94179231, 94179311, 94179317, 94179331,..)	8140.47.2711, 8140.47.2721	85	06/1990 → 04/1996		2,5	12	063217148010	**MSN229**
DAILY I Cassone / Furgonato / Promiscuo								
30-8 (10014131, 10014132, 10014137, 10014231, 10014232, 1001..)	8140.61.200	53	01/1978 → 12/1989		3,5	12	063216896010	**MSN224**
30-8 (10014131, 10014132, 10014137, 10014231, 10014232, 1001..)	8140.61.200	53	08/1980 → 02/1989		2,5	12	063217148010	**MSN229**
30-8 (10014131, 10014132, 10014137, 10014231, 10014232, 1001..)	8140.61.200	53	01/1978 → 12/1989		2,3	12	063522187740	**MSN2005**
30-8 (12914111, 12914112, 12914117, 12914131, 12914137, 1291..)	8140.07.2700, 8140.07.2712	55	01/1989 → 08/1998		3,5	12	063216896010	**MSN224**
30-8 (12914111, 12914112, 12914117, 12914131, 12914137, 1291..)	8140.07.2700, 8140.07.2712	55	01/1989 → 08/1998		3,5	12	063216896010	**MSN224**
30-8 (12914111, 12914112, 12914117, 12914131, 12914137, 1291..)	8140.07.2700, 8140.07.2712	55	01/1989 → 08/1998		2,5	12	063217410010	**MSN242**
30-8 (12914111, 12914112, 12914117, 12914131, 12914137, 1291..)	8140.07.2700, 8140.07.2712	55	01/1989 → 08/1998		2,5	12	063217410010	**MSN242**
30-8 (12914111, 12914112, 12914117, 12914131, 12914137, 1291..)	8140.07.2700, 8140.07.2712	55	05/1996 → 03/1998		2,3	12	063522187740	**MSN2005**
30-8 (12914111, 12914112, 12914117, 12914131, 12914137, 1291..)	8140.07.2700, 8140.07.2712	55	05/1996 → 03/1998		2,3	12	063522187740	**MSN2005**
30-8 (12914111, 12914112, 12914117, 12914131, 12914137, 1291..)	8140.67F.	60	01/1989 → 08/1998		3,5	12	063216896010	**MSN224**
30-8 (12914111, 12914112, 12914117, 12914131, 12914137, 1291..)	8140.67F.	60	01/1989 → 08/1998		3,5	12	063216896010	**MSN224**

		kW		i	kW	V	LONG	SHORT
IVECO								
DAILY I Cassone / Furgonato / Promiscuo								
30-8 (12914111, 12914112, 12914117, 12914131, 12914137, 1291..)	8140.67F.	60	01/1989 → 08/1998		2,5	12	063217410010	**MSN242**
30-8 (12914111, 12914112, 12914117, 12914131, 12914137, 1291..)	8140.67F.	60	01/1989 → 08/1998		2,5	12	063217410010	**MSN242**
30-8 (12914111, 12914112, 12914117, 12914131, 12914137, 1291..)	8140.67F.	60	05/1996 → 03/1998		2,3	12	063522187740	**MSN2005**
30-8 (12914111, 12914112, 12914117, 12914131, 12914137, 1291..)	8140.67F.	60	05/1996 → 03/1998		2,3	12	063522187740	**MSN2005**
30-8 (14914111, 14914117, 14914211, 14914217, 14915111, 1491..)	8140.63.	62	09/1998 → 09/1998		3,5	12	063216896010	**MSN224**
30-8 (14914111, 14914117, 14914211, 14914217, 14915111, 1491..)	8140.63.	62	09/1998 → 09/1998		2,5	12	063217410010	**MSN242**
30-8 (14914111, 14914117, 14914211, 14914217, 14915111, 1491..)	8140.63.	62	09/1998 → 05/1999		2,3	12	063522187740	**MSN2005**
30-8 (14914111, 14914117, 14914211, 14914217, 14915111, 1491..)	8140.67F.	60	01/1996 → 08/1998		3,5	12	063216896010	**MSN224**
30-8 (14914111, 14914117, 14914211, 14914217, 14915111, 1491..)	8140.67F.	60	01/1996 → 08/1998		2,5	12	063217410010	**MSN242**
30-8 (14914111, 14914117, 14914211, 14914217, 14915111, 1491..)	8140.67F.	60	09/1998 → 05/1999		2,3	12	063522187740	**MSN2005**
30-8 V (14914111, 14914117, 14914211, 14914217, 14915111, 14..)	8140.63.	62	09/1998 → 09/1998		3,5	12	063216896010	**MSN224**
30-8 V (14914111, 14914117, 14914211, 14914217, 14915111, 14..)	8140.63.	62	09/1998 → 09/1998		2,5	12	063217410010	**MSN242**
30-8 V (14914111, 14914117, 14914211, 14914217, 14915111, 14..)	8140.63.	62	09/1998 → 05/1999		2,3	12	063522187740	**MSN2005**
30-10	8140.23.	76	01/1997 → 05/1999		2,3	12	063522187740	**MSN2005**
30-10 C	8140.23.	76	01/1997 → 05/1999		2,3	12	063522187740	**MSN2005**
30-10 C	8140.23.	76	01/1998 → 05/1999		2,3	12	063522187740	**MSN2005**
35-8 (10034131, 10034132, 10034137, 10034224, 10034231, 1003..)	8140.61.200	53	01/1978 → 12/1989		3,5	12	063216896010	**MSN224**

		kW			kW	V	LONG	SHORT
IVECO								
DAILY I Cassone / Furgonato / Promiscuo								
35-8 (10034131, 10034132, 10034137, 10034224, 10034231, 1003..)	8140.61.200	53	01/1985 → 02/1989		2,5	12	063217148010	**MSN229**
35-8 (10034131, 10034132, 10034137, 10034224, 10034231, 1003..)	8140.61.200	53	04/1978 → 06/1989		2,3	12	063522187740	**MSN2005**
35-8 (12934104, 12934111, 12934112, 12934117, 12934124, 1293..)	8140.07.2700, 8140.07.2712	55	01/1991 → 08/1998		3,5	12	063216896010	**MSN224**
35-8 (12934104, 12934111, 12934112, 12934117, 12934124, 1293..)	8140.07.2700, 8140.07.2712	55	01/1991 → 08/1998		3,5	12	063216896010	**MSN224**
35-8 (12934104, 12934111, 12934112, 12934117, 12934124, 1293..)	8140.07.2700, 8140.07.2712	55	01/1991 → 08/1998		2,5	12	063217410010	**MSN242**
35-8 (12934104, 12934111, 12934112, 12934117, 12934124, 1293..)	8140.07.2700, 8140.07.2712	55	01/1991 → 08/1998		2,5	12	063217410010	**MSN242**
35-8 (12934104, 12934111, 12934112, 12934117, 12934124, 1293..)	8140.07.2700, 8140.07.2712	55	05/1996 → 03/1998		2,3	12	063522187740	**MSN2005**
35-8 (12934104, 12934111, 12934112, 12934117, 12934124, 1293..)	8140.07.2700, 8140.07.2712	55	05/1996 → 03/1998		2,3	12	063522187740	**MSN2005**
35-8 (12934104, 12934111, 12934112, 12934117, 12934124, 1293..)	8140.67F.	60	01/1991 → 08/1998		3,5	12	063216896010	**MSN224**
35-8 (12934104, 12934111, 12934112, 12934117, 12934124, 1293..)	8140.67F.	60	01/1991 → 08/1998		3,5	12	063216896010	**MSN224**
35-8 (12934104, 12934111, 12934112, 12934117, 12934124, 1293..)	8140.67F.	60	01/1991 → 08/1998		2,5	12	063217410010	**MSN242**
35-8 (12934104, 12934111, 12934112, 12934117, 12934124, 1293..)	8140.67F.	60	01/1991 → 08/1998		2,5	12	063217410010	**MSN242**
35-8 (12934104, 12934111, 12934112, 12934117, 12934124, 1293..)	8140.67F.	60	05/1996 → 03/1998		2,3	12	063522187740	**MSN2005**
35-8 (12934104, 12934111, 12934112, 12934117, 12934124, 1293..)	8140.67F.	60	05/1996 → 03/1998		2,3	12	063522187740	**MSN2005**
35-8 (14934104, 14934111, 14934204, 14934205, 14934211, 1493..)	8140.63.	62	09/1998 → 09/1998		3,5	12	063216896010	**MSN224**

		kW		i	kW	V	LONG	SHORT
IVECO								
DAILY I Cassone / Furgonato / Promiscuo								
35-8 (14934104, 14934111, 14934204, 14934205, 14934211, 1493..)	8140.63.	62	09/1998 → 09/1998		2,5	12	063217410010	**MSN242**
35-8 (14934104, 14934111, 14934204, 14934205, 14934211, 1493..)	8140.63.	62	09/1998 → 05/1999		2,3	12	063522187740	**MSN2005**
35-10 (10314204, 10314211, 10314212, 10314217, 10314411, 103..)	8140.21.200	68	01/1985 → 12/1989		2,5	12	063217148010	**MSN229**
35-10 (10314204, 10314211, 10314212, 10314217, 10314411, 103..)	8140.21.200	68	02/1985 → 06/1989		2,3	12	063522187740	**MSN2005**
35-10 (12974212, 12974217, 13014111, 13014131, 13014204, 130..)	8140.47R	80	07/1992 → 04/1997		2,5	12	063217148010	**MSN229**
35-10 (12974212, 12974217, 13014111, 13014131, 13014204, 130..)	8140.47R	80	07/1992 → 04/1997		2,5	12	063217410010	**MSN242**
35-10 (12974212, 12974217, 13014111, 13014131, 13014204, 130..)	8140.47R	80	01/1989 → 08/1998		2,3	12	063522187740	**MSN2005**
35-10 (12974212, 12974217, 13014111, 13014131, 13014204, 130..)	8140.47R.2790	76	07/1992 → 04/1997		2,5	12	063217148010	**MSN229**
35-10 (15034111, 15034204, 15034211, 15034215, 15034217, 150..)	8140.23.	76	01/1996 → 05/1999		2,3	12	063522187740	**MSN2005**
35-12 (13114131, 13114204, 13114211, 13114212, 13114217, 131..)	8140.47.2700	85	01/1990 → 04/1996		2,5	12	063217148010	**MSN229**
40-10 4x4 (15214104, 15214111, 15214117, 15215111)	8140.23.	76	01/1997 → 01/1997		2,5	12	063217410010	**MSN242**
40-10 4x4 (15214104, 15214111, 15214117, 15215111)	8140.23.	76	01/1997 → 05/1999		2,3	12	063522187740	**MSN2005**
40-8 V	8140.61.200	53	01/1983 → 06/1989		3,5	12	063216896010	**MSN224**
40-8 V	8140.61.200	53	01/1983 → 06/1989		2,3	12	063522187740	**MSN2005**
40-10 V	8140.27 S	68	09/1989 → 12/1989		2,5	12	063217148010	**MSN229**
40-10 V	8140.27 S	68	09/1989 → 12/1989		2,5	12	063217410010	**MSN242**

		kW			kW	V	LONG	SHORT
IVECO								
DAILY I Cassone / Furgonato / Promiscuo								
40-10 V	8140.27.2720	76	01/1990 → 04/1996		2,5	12	063217410010	**MSN242**
45-10 V (10334204, 10334211, 10334212, 10334217, 10334404)	8140.21.200	68	01/1985 → 12/1989		2,5	12	063217148010	**MSN229**
45-10 V (10334204, 10334211, 10334212, 10334217, 10334404)	8140.21.200	68	02/1985 → 06/1989		2,3	12	063522187740	**MSN2005**
45-10 V (13034204, 13034211, 13034212, 13034224, 13034231, 1..)	8140.27.2720	76	01/1989 → 04/1996		2,5	12	063217148010	**MSN229**
49-10 V (10354204, 10354211, 10354212, 10354217, 10354404, 1..)	8140.21.200	68	01/1985 → 12/1989		2,5	12	063217148010	**MSN229**
49-10 V (10354204, 10354211, 10354212, 10354217, 10354404, 1..)	8140.21.200	68	02/1985 → 06/1989		2,3	12	063522187740	**MSN2005**
49-10 V (13054204, 13054211, 13054212, 13054215, 13054217, 1..)	8140.27.2700, 8140.47R.2790	76	07/1992 → 04/1996		2,5	12	063217148010	**MSN229**
49-10 V (13054204, 13054211, 13054212, 13054215, 13054217, 1..)	8140.27.2700, 8140.47R.2790	76	07/1992 → 04/1996		2,5	12	063217410010	**MSN242**
49-12 V (13134124, 13134204, 13134211, 13134212, 13134217, 1..)	8140.47.2711, 8140.47.2721	85	06/1990 → 04/1996		2,5	12	063217148010	**MSN229**
49-12 V (13134124, 13134204, 13134211, 13134212, 13134217, 1..)	8140.47.2711, 8140.47.2721	85	06/1990 → 04/1996		2,5	12	063217410010	**MSN242**
49-12 V (15154204, 15154211, 15154215, 15154217, 15154404, 1..)	8140.43.	90	05/1996 → 05/1999		2,3	12	063522187740	**MSN2005**
59-12 V (13154404, 13154411, 13154412, 13154417, 13154424, 1..)	8140.47.2700, 8140.47.2711	85	05/1991 → 04/1996		2,5	12	063217148010	**MSN229**
59-12 V (13154404, 13154411, 13154412, 13154417, 13154424, 1..)	8140.47.2700, 8140.47.2711	85	05/1991 → 04/1996		2,5	12	063217410010	**MSN242**
59-12 V (15174404, 15174411, 15174415, 15174417)	8140.43.	90	05/1996 → 05/1999		2,3	12	063522187740	**MSN2005**
DAILY I Pianale piatto/Telaio								
30-8 (10011131, 10011132, 10011231, 10011232, 10011237, 1001..)	8140.61.200	53	01/1978 → 12/1989		3,5	12	063216896010	**MSN224**

		kW		i	kW	V	LONG	SHORT
IVECO								
DAILY I Pianale piatto/Telaio								
30-8 (10011131, 10011132, 10011231, 10011232, 10011237, 1001..)	8140.61.200	53	08/1980 → 02/1989		2,5	12	063217148010	**MSN229**
30-8 (10011131, 10011132, 10011231, 10011232, 10011237, 1001..)	8140.61.200	53	01/1978 → 12/1989		2,3	12	063522187740	**MSN2005**
30-8 (10011131, 10011132, 10011231, 10011232, 10011237, 1001..)	8140.63.	62	09/1998 → 09/1998		3,5	12	063216896010	**MSN224**
30-8 (10011131, 10011132, 10011231, 10011232, 10011237, 1001..)	8140.63.	62	09/1998 → 09/1998		2,5	12	063217410010	**MSN242**
30-8 (10011131, 10011132, 10011231, 10011232, 10011237, 1001..)	8140.63.	62	09/1998 → 05/1999		2,3	12	063522187740	**MSN2005**
30-8 (10011131, 10011132, 10011231, 10011232, 10011237, 1001..)	8140.67F.	60	01/1996 → 08/1998		3,5	12	063216896010	**MSN224**
30-8 (10011131, 10011132, 10011231, 10011232, 10011237, 1001..)	8140.67F.	60	01/1996 → 08/1998		2,5	12	063217410010	**MSN242**
30-8 (10011131, 10011132, 10011231, 10011232, 10011237, 1001..)	8140.67F.	60	05/1996 → 03/1998		2,3	12	063522187740	**MSN2005**
30-8 (12910211, 12911111, 12911112, 12911117, 12911131, 1291..)	8140.07.2700	55	01/1992 → 08/1998		3,5	12	063216896010	**MSN224**
30-8 (12910211, 12911111, 12911112, 12911117, 12911131, 1291..)	8140.07.2700	55	01/1992 → 08/1998		3,5	12	063216896010	**MSN224**
30-8 (12910211, 12911111, 12911112, 12911117, 12911131, 1291..)	8140.07.2700	55	01/1992 → 08/1998		2,5	12	063217410010	**MSN242**
30-8 (12910211, 12911111, 12911112, 12911117, 12911131, 1291..)	8140.07.2700	55	01/1992 → 08/1998		2,5	12	063217410010	**MSN242**
30-8 (12910211, 12911111, 12911112, 12911117, 12911131, 1291..)	8140.07.2700	55	05/1996 → 03/1998		2,3	12	063522187740	**MSN2005**
30-8 (12910211, 12911111, 12911112, 12911117, 12911131, 1291..)	8140.07.2700	55	05/1996 → 03/1998		2,3	12	063522187740	**MSN2005**
30-8 (12910211, 12911111, 12911112, 12911117, 12911131, 1291..)	8140.67F.	60	01/1992 → 08/1998		3,5	12	063216896010	**MSN224**

		kW			kW	V	LONG	SHORT
IVECO								
DAILY I Pianale piatto/Telaio								
30-8 (12910211, 12911111, 12911112, 12911117, 12911131, 1291..)	8140.67F.	60	01/1992 → 08/1998		3,5	12	063216896010	**MSN224**
30-8 (12910211, 12911111, 12911112, 12911117, 12911131, 1291..)	8140.67F.	60	01/1992 → 08/1998		2,5	12	063217410010	**MSN242**
30-8 (12910211, 12911111, 12911112, 12911117, 12911131, 1291..)	8140.67F.	60	01/1992 → 08/1998		2,5	12	063217410010	**MSN242**
30-8 (12910211, 12911111, 12911112, 12911117, 12911131, 1291..)	8140.67F.	60	05/1996 → 03/1998		2,3	12	063522187740	**MSN2005**
30-8 (12910211, 12911111, 12911112, 12911117, 12911131, 1291..)	8140.67F.	60	05/1996 → 03/1998		2,3	12	063522187740	**MSN2005**
30-8 (14911111, 14911117, 14911211, 14911215, 14911217, 1491..)	8140.63.	62	09/1998 → 09/1998		3,5	12	063216896010	**MSN224**
30-8 (14911111, 14911117, 14911211, 14911215, 14911217, 1491..)	8140.63.	62	09/1998 → 09/1998		2,5	12	063217410010	**MSN242**
30-8 (14911111, 14911117, 14911211, 14911215, 14911217, 1491..)	8140.63.	62	09/1998 → 05/1999		2,3	12	063522187740	**MSN2005**
30-10	8140.23.	76	01/1998 → 05/1999		2,3	12	063522187740	**MSN2005**
35-8 (10031131, 10031132, 10031137, 10031224, 10031231, 1003..)	8140.61.200	53	01/1978 → 12/1989		3,5	12	063216896010	**MSN224**
35-8 (10031131, 10031132, 10031137, 10031224, 10031231, 1003..)	8140.61.200	53	01/1985 → 02/1989		2,5	12	063217148010	**MSN229**
35-8 (10031131, 10031132, 10031137, 10031224, 10031231, 1003..)	8140.61.200	53	04/1978 → 06/1989		2,3	12	063522187740	**MSN2005**
35-8 (12931102, 12931104, 12931111, 12931112, 12931117, 1293..)	8140.07.2700, 8140.07.2712	55	01/1989 → 08/1998		3,5	12	063216896010	**MSN224**
35-8 (12931102, 12931104, 12931111, 12931112, 12931117, 1293..)	8140.07.2700, 8140.07.2712	55	01/1989 → 08/1998		3,5	12	063216896010	**MSN224**
35-8 (12931102, 12931104, 12931111, 12931112, 12931117, 1293..)	8140.07.2700, 8140.07.2712	55	01/1989 → 08/1998		2,5	12	063217410010	**MSN242**

		kW			kW	V	LONG	SHORT
IVECO								
DAILY I Pianale piatto/Telaio								
35-8 (12931102, 12931104, 12931111, 12931112, 12931117, 1293..)	8140.07.2700, 8140.07.2712	55	01/1989 → 08/1998		2,5	12	063217410010	**MSN242**
35-8 (12931102, 12931104, 12931111, 12931112, 12931117, 1293..)	8140.07.2700, 8140.07.2712	55	05/1996 → 03/1998		2,3	12	063522187740	**MSN2005**
35-8 (12931102, 12931104, 12931111, 12931112, 12931117, 1293..)	8140.07.2700, 8140.07.2712	55	05/1996 → 03/1998		2,3	12	063522187740	**MSN2005**
35-8 (12931102, 12931104, 12931111, 12931112, 12931117, 1293..)	8140.67F.	60	01/1989 → 08/1998		3,5	12	063216896010	**MSN224**
35-8 (12931102, 12931104, 12931111, 12931112, 12931117, 1293..)	8140.67F.	60	01/1989 → 08/1998		3,5	12	063216896010	**MSN224**
35-8 (12931102, 12931104, 12931111, 12931112, 12931117, 1293..)	8140.67F.	60	01/1989 → 08/1998		2,5	12	063217410010	**MSN242**
35-8 (12931102, 12931104, 12931111, 12931112, 12931117, 1293..)	8140.67F.	60	01/1989 → 08/1998		2,5	12	063217410010	**MSN242**
35-8 (12931102, 12931104, 12931111, 12931112, 12931117, 1293..)	8140.67F.	60	05/1996 → 03/1998		2,3	12	063522187740	**MSN2005**
35-8 (12931102, 12931104, 12931111, 12931112, 12931117, 1293..)	8140.67F.	60	05/1996 → 03/1998		2,3	12	063522187740	**MSN2005**
35-8 (14930304, 14931104, 14931111, 14931115, 14931204, 1493..)	8140.63.	62	09/1998 → 09/1998		3,5	12	063216896010	**MSN224**
35-8 (14930304, 14931104, 14931111, 14931115, 14931204, 1493..)	8140.63.	62	09/1998 → 09/1998		2,5	12	063217410010	**MSN242**
35-8 (14930304, 14931104, 14931111, 14931115, 14931204, 1493..)	8140.63.	62	09/1998 → 05/1999		2,3	12	063522187740	**MSN2005**
35-10	8140.47R	80	07/1992 → 12/1996		2,5	12	063217148010	**MSN229**
35-10	8140.47R	80	07/1992 → 12/1996		2,5	12	063217410010	**MSN242**
35-10	8140.47R	80	01/1989 → 12/1996		2,3	12	063522187740	**MSN2005**
35-10 (10310311, 10311111, 10311112, 10311117, 10311211, 103..)	8140.21.200	68	01/1985 → 12/1989		2,5	12	063217148010	**MSN229**

		kW			kW	V	LONG	SHORT
IVECO								
DAILY I Pianale piatto/Telaio								
35-10 (10310311, 10311111, 10311112, 10311117, 10311211, 103..)	8140.21.200	68	02/1985 → 06/1989		2,3	12	063522187740	**MSN2005**
35-10 (12971112, 12971212, 12971312, 12971317, 12976112, 129..)	8140.47R.2790	76	07/1992 → 12/1996		2,5	12	063217148010	**MSN229**
35-10 (12971112, 12971212, 12971312, 12971317, 12976112, 129..)	8140.47R.2790	76	01/1989 → 12/1996		2,3	12	063522187740	**MSN2005**
35-10 (12971112, 12971212, 12971312, 12971317, 12976112, 129..)	8140.97.2781	68	07/1992 → 12/1996		2,5	12	063217148010	**MSN229**
35-10 (12971112, 12971212, 12971312, 12971317, 12976112, 129..)	8140.97.2781	68	01/1989 → 12/1996		2,3	12	063522187740	**MSN2005**
35-10 (15030111, 15030211, 15030311, 15031111, 15031117, 150..)	8140.23.	76	05/1996 → 05/1999		2,3	12	063522187740	**MSN2005**
35-12 (13110131, 13110211, 13110231, 13110311, 13110312, 131..)	8140.47.2700	85	01/1990 → 04/1996		2,5	12	063217148010	**MSN229**
35-12 (13110131, 13110211, 13110231, 13110311, 13110312, 131..)	8140.47.2700	85	01/1990 → 04/1996		2,3	12	063522187740	**MSN2005**
35-12 (15130311, 15130411, 15131111, 15131204, 15131211, 151..)	8140.43.	90	05/1996 → 05/1999		2,3	12	063522187740	**MSN2005**
40-8	8140.61.200	53	01/1983 → 06/1989		3,5	12	063216896010	**MSN224**
40-8	8140.61.200	53	01/1983 → 06/1989		2,3	12	063522187740	**MSN2005**
40-10	8140.27 S	68	09/1989 → 12/1989		2,5	12	063217148010	**MSN229**
40-10	8140.27 S	68	09/1989 → 12/1989		2,5	12	063217410010	**MSN242**
40-10 W 4x4	8140.23.	76	01/1997 → 01/1997		2,5	12	063217410010	**MSN242**
40-10 W 4x4	8140.23.	76	01/1997 → 05/1999		2,3	12	063522187740	**MSN2005**
45-10 (10331211, 10331212, 10331217, 10331304, 10331311, 103..)	8140.21.200	68	01/1985 → 12/1989		2,5	12	063217148010	**MSN229**
45-10 (10331211, 10331212, 10331217, 10331304, 10331311, 103..)	8140.21.200	68	02/1985 → 06/1989		2,3	12	063522187740	**MSN2005**
45-10 (13031204, 13031211, 13031212, 13031224, 13031231, 130..)	8140.27.2720	76	01/1989 → 04/1996		2,5	12	063217148010	**MSN229**

		kW		i	kW	V	LONG	SHORT
IVECO								
DAILY I Pianale piatto/Telaio								
49-10 (10350211, 10350304, 10350311, 10350404, 10350411, 103..)	8140.21.200	68	01/1985 → 12/1989		2,5	12	063217148010	**MSN229**
49-10 (10350211, 10350304, 10350311, 10350404, 10350411, 103..)	8140.21.200	68	02/1985 → 06/1989		2,3	12	063522187740	**MSN2005**
49-10 (13050211, 13050231, 13050304, 13050311, 13050331, 130..)	8140.27.2700, 8140.47R.2790	76	07/1992 → 04/1996		2,5	12	063217148010	**MSN229**
49-10 (13050211, 13050231, 13050304, 13050311, 13050331, 130..)	8140.27.2700, 8140.47R.2790	76	07/1992 → 04/1996		2,5	12	063217410010	**MSN242**
49-10 (13050211, 13050231, 13050304, 13050311, 13050331, 130..)	8140.27.2700, 8140.47R.2790	76	01/1989 → 04/1996		2,3	12	063522187740	**MSN2005**
49-10 (15050304, 15050404, 15050411, 15051204, 15051211, 150..)	8140.23.	76	05/1996 → 05/1999		2,3	12	063522187740	**MSN2005**
49-12 (13130211, 13130231, 13130304, 13130311, 13130312, 131..)	8140.47.2711, 8140.47.2721	85	06/1990 → 04/1996		2,5	12	063217148010	**MSN229**
49-12 (13130211, 13130231, 13130304, 13130311, 13130312, 131..)	8140.47.2711, 8140.47.2721	85	06/1990 → 04/1996		2,5	12	063217410010	**MSN242**
49-12 (15150211, 15150311, 15150404, 15150411, 15151204, 151..)	8140.43.	90	05/1996 → 05/1999		2,3	12	063522187740	**MSN2005**
59-12 (13150204, 13150211, 13150231, 13150311, 13150312, 131..)	8140.47.2700, 8140.47.2711	85	05/1991 → 04/1996		2,5	12	063217148010	**MSN229**
59-12 (13150204, 13150211, 13150231, 13150311, 13150312, 131..)	8140.47.2700, 8140.47.2711	85	05/1991 → 04/1996		2,5	12	063217410010	**MSN242**
59-12 (15170211, 15170304, 15170311, 15170504, 15170511, 151..)	8140.43.	90	05/1996 → 05/1999		2,3	12	063522187740	**MSN2005**
DAILY I Ribaltabile								
35-8 K (14930304, 14931104, 14931111, 14931115, 14931204, 14..)	8140.63.	62	09/1998 → 09/1998		3,5	12	063216896010	**MSN224**
35-8 K (14930304, 14931104, 14931111, 14931115, 14931204, 14..)	8140.63.	62	09/1998 → 09/1998		2,5	12	063217410010	**MSN242**
35-8 K (14930304, 14931104, 14931111, 14931115, 14931204, 14..)	8140.63.	62	09/1998 → 05/1999		2,3	12	063522187740	**MSN2005**

		kW			kW	V	LONG	SHORT
IVECO								
DAILY I Ribaltabile								
35-10 K (15030111, 15030211, 15030311, 15031111, 15031117, 1..)	8140.23.	76	01/1997 → 05/1999		2,3	12	063522187740	**MSN2005**
35-12 K (15130311, 15130411, 15131111, 15131204, 15131211, 1..)	8140.43.	90	09/1996 → 08/1998		2,3	12	063522187740	**MSN2005**
45-10 (13031204, 13031211, 13031212, 13031224, 13031231, 130..)	8140.27.2720	76	01/1992 → 04/1996		2,5	12	063217148010	**MSN229**
49-10 K (13056212, 13056224, 13056231, 13056237, 13056304, 1..)	8140.27.2700, 8140.47R.2790	76	07/1992 → 04/1996		2,5	12	063217148010	**MSN229**
49-10 K (13056212, 13056224, 13056231, 13056237, 13056304, 1..)	8140.27.2700, 8140.47R.2790	76	07/1992 → 04/1996		2,5	12	063217410010	**MSN242**
49-10 K (15056204, 15056211, 15056304, 15056311)	8140.23.	76	05/1996 → 05/1999		2,3	12	063522187740	**MSN2005**
49-12 K	8140.43.	90	05/1996 → 05/1999		2,3	12	063522187740	**MSN2005**
49-12 K (13136204, 13136211, 13136212, 13136224, 13136231, 1..)	8140.47.2711, 8140.47.2721	85	06/1990 → 04/1996		2,5	12	063217148010	**MSN229**
49-12 K (13136204, 13136211, 13136212, 13136224, 13136231, 1..)	8140.47.2711, 8140.47.2721	85	06/1990 → 04/1996		2,5	12	063217410010	**MSN242**
59-12 K (13156211, 13156212, 13156231, 13156311, 13156312, 1..)	8140.47.2700, 8140.47.2711	85	05/1991 → 04/1996		2,5	12	063217148010	**MSN229**
59-12 K (13156211, 13156212, 13156231, 13156311, 13156312, 1..)	8140.47.2700, 8140.47.2711	85	05/1991 → 04/1996		2,5	12	063217410010	**MSN242**
59-12 K (15176211, 15176304, 15176311, 15176315, 15176317, 1..)	8140.43.	90	05/1996 → 05/1999		2,3	12	063522187740	**MSN2005**
DAILY II Cassone / Furgonato / Promiscuo								
29 L 11 V	8140.43C	78	05/1999 → 12/2001		2,3	12	063521093070	**MSN2009**
29 L 12 V (ALKA41A2, ALLA52A2, ALKA42A2)	F1AE0481B	85	09/2002 → 03/2006		2,3	12	063521093070	**MSN2009**
29 L 9 V	8140.63.	62	05/1999 → 09/2002		2,3	12	063521093070	**MSN2009**
35 C 12 V, 35 S 12 V (AGKA43A2, AGKB43A2, AGKB46A2, AGKC43A2)	F1AE0481B	85	09/2002 → 03/2006		2,3	12	063521093070	**MSN2009**
35 S 10 (ANJA41A1, ANJA42A2, ANJA42AB, ANJA43A, ANJAV1A, AGJ..)	F1AE0481A	70	09/2002 → 09/2004		2,3	12	063521093070	**MSN2009**

		kW		i	kW	V	LONG	SHORT
IVECO								
DAILY II Cassone / Furgonato / Promiscuo								
35 S 11 V,35 C 11 V	8140.43C	78	05/1999 → 03/2006		2,3	12	063521093070	**MSN2009**
35 S 13 V,35 C 13 V	8140.43S	92	05/1999 → 03/2006		2,3	12	063521093070	**MSN2009**
35 S 15 V, 35 C 15 V (A6HCV3B2, A6HBV4B2, A6HC41B2, A6HC42B2)	8140.43N	107	11/2002 → 03/2006		2,3	12	063521093070	**MSN2009**
35 S 9 V,35 C 9 V	8140.63.	62	05/1999 → 05/1999		2,3	12	063521093070	**MSN2009**
50 C 11	8140.43C	78	05/1999 → 09/2004		2,3	12	063521093070	**MSN2009**
50 C 13	8140.43S	92	05/1999 → 05/1999		2,3	12	063521093070	**MSN2009**
DAILY II Pianale piatto/Telaio								
29 L 10 (ALJAV1A1, ALJA41AA, ALJA41A1, AHJA64A1, AHJA14A1, A..)	F1AE0481A	70	09/2002 → 03/2006		2,3	12	063521093070	**MSN2009**
29 L 11	8140.43B, 8140.43C	78	05/1999 → 12/2001		2,3	12	063521093070	**MSN2009**
29 L 12 (ALKA41A1, AHKA64A1, ALLA51A1)	F1AE0481B	85	09/2002 → 03/2006		2,3	12	063521093070	**MSN2009**
29 L 13	8140.43S	92	11/2001 → 03/2006		2,3	12	063521093070	**MSN2009**
29 L 9	8140.63.	62	05/1999 → 09/2002		2,3	12	063521093070	**MSN2009**
35 C 10 V , 35 S 10 V (AMJA11A1, AMJA14A1, AMJA64A1, AMJA65A..)	F1AE0481A	70	09/2002 → 03/2006		2,3	12	063521093070	**MSN2009**
35 C 12 , 35 S 12 (AEKA14A1, AEKA14AA, AEKA64A1, AEKB11A1, A..)	F1AE0481B	85	09/2002 → 03/2006		2,3	12	063521093070	**MSN2009**
35 C 15	8140.43N	107	11/2001 → 03/2006		2,3	12	063521093070	**MSN2009**
35 S 11,35 C 11	8140.43C	78	05/1999 → 03/2006		2,3	12	063521093070	**MSN2009**
35 S 13,35 C 13	8140.43S	92	05/1999 → 03/2006		2,3	12	063521093070	**MSN2009**
35 S 9,35 C 9	8140.63.	62	05/1999 → 05/1999		2,3	12	063521093070	**MSN2009**
50 C 11	8140.43C	78	05/1999 → 09/2004		2,3	12	063521093070	**MSN2009**
50 C 13	8140.43S	92	05/1999 → 05/1999		2,3	12	063521093070	**MSN2009**
50 C 15	8140.43N	107	05/2001 → 09/2004		2,3	12	063521093070	**MSN2009**
65 C 15	8140.43N	107	11/2001 → 09/2004		2,3	12	063521093070	**MSN2009**
DAILY III Cassone / Furgonato / Promiscuo								
29L10 V	F1AE0481FA	70	05/2006 → 05/2006		2,3	12	063521093070	**MSN2009**
29L12 V, 29L12 V/P	F1AE0481GA	85	05/2006 → 05/2006		2,3	12	063521093070	**MSN2009**
29L14 C, 29L14 C/P, 29L14 V, 29L14 V/P	F1AE0481HA	100	05/2006 → 05/2006		2,3	12	063521093070	**MSN2009**
35C10, 35S10	F1AE0481FA	70	05/2006 → 05/2006		2,3	12	063521093070	**MSN2009**
35C12 V, 35C12 V/P, 35S12 V, 35S12 V/P	F1AE0481GA	85	05/2006 → 05/2006		2,3	12	063521093070	**MSN2009**
35C15 V, 35C15 V/P	F1CE0481FA	107	05/2006 → 05/2006		2,3	12	063521093070	**MSN2009**
35C18 V, 35C18 V/P, 35S18 V, 35S18 V/P	F1CE0481HA	130	05/2006 → 05/2006		2,3	12	063521093070	**MSN2009**
35S14 C, 35S14 C/P, 35S14 V, 35S14 V/P, 35C14 V, 35C14 V/P	F1AE0481HA	100	05/2006 → 05/2006		2,3	12	063521093070	**MSN2009**

		kW			kW	V	LONG	SHORT
IVECO								
DAILY III Cassone / Furgonato / Promiscuo								
40C15 V, 40C15 V/P	F1CE0481FA	107	05/2006 → 05/2006		2,3	12	063521093070	**MSN2009**
40C18 V, 40C18 V/P	F1CE0481HA	130	05/2006 → 05/2006		2,3	12	063521093070	**MSN2009**
50C15	F1CE0481FA	107	05/2006 → 05/2006		2,3	12	063521093070	**MSN2009**
50C18	F1CE0481HA	130	05/2006 → 05/2006		2,3	12	063521093070	**MSN2009**
60C18	F1CE0481HC	130	05/2006 → 05/2006		2,3	12	063521093070	**MSN2009**
65C18	F1CE0481HC	130	05/2006 → 05/2006		2,3	12	063521093070	**MSN2009**
DAILY III Pianale piatto/Telaio								
29L10	F1AE0481FA	70	05/2006 → 05/2006		2,3	12	063521093070	**MSN2009**
29L12	F1AE0481GA	85	05/2006 → 05/2006		2,3	12	063521093070	**MSN2009**
29L14	F1AE0481HA	100	05/2006 → 05/2006		2,3	12	063521093070	**MSN2009**
35C10, 35S10	F1AE0481FA	70	05/2006 → 05/2006		2,3	12	063521093070	**MSN2009**
35C12, 35S12	F1AE0481GA	85	05/2006 → 05/2006		2,3	12	063521093070	**MSN2009**
35C15	F1CE0481FA	107	05/2006 → 05/2006		2,3	12	063521093070	**MSN2009**
35C18, 35S18	F1CE0481HA	130	05/2006 → 05/2006		2,3	12	063521093070	**MSN2009**
35S14	F1AE0481HA	100	05/2006 → 05/2006		2,3	12	063521093070	**MSN2009**
40C15	F1CE0481FA	107	05/2006 → 05/2006		2,3	12	063521093070	**MSN2009**
40C18	F1CE0481HA	130	05/2006 → 05/2006		2,3	12	063521093070	**MSN2009**
50C15	F1CE0481FA	107	05/2006 → 05/2006		2,3	12	063521093070	**MSN2009**
50C18	F1CE0481HA	130	05/2006 → 05/2006		2,3	12	063521093070	**MSN2009**
60C18	F1CE0481HC	130	05/2006 → 05/2006		2,3	12	063521093070	**MSN2009**
65C18	F1CE0481HC	130	05/2006 → 05/2006		2,3	12	063521093070	**MSN2009**
DAILY III Ribaltabile								
35C10 K	F1AE0481FA	70	05/2006 → 05/2006		2,3	12	063521093070	**MSN2009**
35C12	F1AE0481GA	85	05/2006 → 05/2006		2,3	12	063521093070	**MSN2009**
35C15	F1CE0481FA	107	05/2006 → 05/2006		2,3	12	063521093070	**MSN2009**
35C18	F1CE0481HA	130	05/2006 → 05/2006		2,3	12	063521093070	**MSN2009**
50C15	F1CE0481FA	107	05/2006 → 05/2006		2,3	12	063521093070	**MSN2009**
50C18	F1CE0481HA	130	05/2006 → 05/2006		2,3	12	063521093070	**MSN2009**
60C18	F1CE0481HC	130	05/2006 → 05/2006		2,3	12	063521093070	**MSN2009**
JAGUAR								
X-TYPE (CF1)								
2.2 D	LJ46G	114	10/2005 →		1,9	12	063280022010	**MSN8022**
X-TYPE Estate								
2.2 D	LJ46G	114	10/2005 →		1,9	12	063280022010	**MSN8022**
KIA								
CARENS I (FC)								
1.8 i	T8	81	11/2000 → 07/2002		1,2	12	063522624010	**MSN2624**
1.8 i	T8	81	11/2000 → 07/2002		0,9	12	063522625010	**MSN2625**
CARENS II (FJ)								
1.6		77	07/2002 →		1,2	12	063522606010	**MSN2606**
1.6		77	07/2002 →		1,2	12	063522624010	**MSN2624**
1.6		77	07/2002 →		0,9	12	063522625010	**MSN2625**
1.8		93	07/2002 →		1,2	12	063522624010	**MSN2624**
1.8		93	07/2002 →		0,9	12	063522625010	**MSN2625**

		kW			kW	V	LONG	SHORT
KIA								
CARENS II (FJ)								
2.0 CRDi	D4EA	83	07/2002 →		2,0	12	063522609010	**MSN2609**
CARNIVAL (UP)								
2.5 V6		121	08/1999 → 10/2001		1,4	12	063522627010	**MSN2627**
2.9 TD		93	08/1999 → 10/2001		2,2	12	063522615010	**MSN2615**
CARNIVAL II (GQ)								
2.5 V6	K5	110	03/2002 →		1,4	12	063522627010	**MSN2627**
2.9 CRDi		106	10/2001 →		2,2	12	063522615010	**MSN2615**
CEE'D 2 volumi /Coda spiovente (ED)								
2.0	G4GC	105	12/2006 →		1,2	12	063522626010	**MSN2626**
CERATO (LD)								
1.6	G4ED	77	07/2004 →		1,0	12	063280901010	**MSN882**
1.6	G4ED	77	07/2004 →		0,9	12	063522605010	**MSN2605**
1.6		77	07/2004 →		1,0	12	063280902010	**MSN883**
2.0	G4GC	105	04/2004 →		1,2	12	063522621010	**MSN2621**
CERATO Tre volumi (LD)								
1.6	G4ED	77	04/2004 →		1,0	12	063280901010	**MSN882**
1.6	G4ED	77	04/2004 →		0,9	12	063522605010	**MSN2605**
1.6		77	04/2004 →		1,0	12	063280902010	**MSN883**
CLARUS (K9A)								
1.8 i 16V	T8	85	07/1996 →		1,2	12	063522624010	**MSN2624**
1.8 i 16V	T8	85	07/1996 →		0,9	12	063522625010	**MSN2625**
2.0 i 16V	FE (16 V)	98	07/1996 →		1,2	12	063522624010	**MSN2624**
2.0 i 16V	FE (16 V)	98	07/1996 →		0,9	12	063522625010	**MSN2625**
CLARUS Station wagon (GC)								
1.8 i 16V	T8	85	05/1998 →		1,2	12	063522624010	**MSN2624**
1.8 i 16V	T8	85	05/1998 →		0,9	12	063522625010	**MSN2625**
2.0 i 16V	FE (16 V)	98	05/1998 →		1,2	12	063522624010	**MSN2624**
2.0 i 16V	FE (16 V)	98	05/1998 →		0,9	12	063522625010	**MSN2625**
JOICE								
2.0		102	02/2000 →		1,0	12	063280901010	**MSN882**
2.0		88	09/2001 →		1,0	12	063280901010	**MSN882**
2.0		88	02/2004 →		1,2	12	063522617010	**MSN2617**
2.0		88	01/2004 →		0,9	12	063522620010	**MSN2620**
MAGENTIS (GD)								
2.0	G4JP	100	05/2001 →		1,2	12	063522619010	**MSN2619**
2.5 V6	G6BV	124	05/2001 →		1,2	12	063522618010	**MSN2618**
PICANTO (BA)								
1.0	G4HE	45	09/2005 →		0,9	12	063522611010	**MSN2611**
1.1	G4HG	48	04/2004 →		0,9	12	063522611010	**MSN2611**
RETONA (CE)								
2.0 16V	FE (16 V)	94	05/2000 →		1,2	12	063522624010	**MSN2624**
2.0 16V	FE (16 V)	94	05/2000 →		0,9	12	063522625010	**MSN2625**
RIO (DC_)								
1.3		55	09/2000 → 02/2005		0,85	12	063522606010	**MSN2606**
1.5 16V		72	09/2000 → 02/2005		0,85	12	063522606010	**MSN2606**

		kW			kW	V	LONG	SHORT
KIA								
RIO Station wagon (DC)								
1.3		55	08/2000 → 02/2005		0,85	12	063522606010	**MSN2606**
1.5 16V		72	08/2000 → 02/2005		0,85	12	063522606010	**MSN2606**
SEPHIA (FA)								
1.5 i	B5	59	02/1996 →		0,9	12	063522625010	**MSN2625**
1.6 i	B6	59	01/1995 →		0,9	12	063522625010	**MSN2625**
1.8 i 16V	OK24N, OK26Y	82	01/1995 →		1,2	12	063522624010	**MSN2624**
SEPHIA Tre volumi (FA)								
1.5 i	B5	59	02/1996 → 10/1997		0,9	12	063522625010	**MSN2625**
1.6 i	B6	59	09/1993 →		0,9	12	063522625010	**MSN2625**
1.8 i 16V	OK24N, OK26Y	82	01/1995 →		1,2	12	063522624010	**MSN2624**
SHUMA (FB)								
1.5 i 16V		65	10/1997 → 03/2001		0,9	12	063522625010	**MSN2625**
1.8 i 16V	T8	81	10/1997 → 03/2001		0,9	12	063522625010	**MSN2625**
SHUMA II (FB)								
1.6		75	05/2001 → 08/2004		0,85	12	063522606010	**MSN2606**
1.8	T8	84	04/2003 → 08/2004		1,2	12	063522624010	**MSN2624**
1.8	T8	84	04/2003 → 08/2004		0,9	12	063522625010	**MSN2625**
SHUMA II Tre volumi (FB)								
1.6		75	05/2001 → 05/2004		0,85	12	063522606010	**MSN2606**
SHUMA Tre volumi (FB)								
1.5	OK280	59	03/1996 → 12/1998		0,9	12	063522625010	**MSN2625**
1.5 i 16V		65	10/1997 → 10/2001		0,9	12	063522625010	**MSN2625**
SORENTO (JC)								
2.4	G4JS	102	08/2002 →		1,2	12	063522619010	**MSN2619**
2.5 CRDi	D4CB	103	08/2002 →		2,0	12	063522628010	**MSN2628**
SPORTAGE (JE_)								
2.0 16V 4WD	G4GC	104	09/2004 →		1,2	12	063522626010	**MSN2626**
2.0 CRDi	D4EA	83	02/2005 →		2,0	12	063522622010	**MSN2622**
2.0 i 16V	G4GC	104	09/2004 →		0,9	12	063522625010	**MSN2625**
2.0 i 16V	G4GC	104	09/2004 →		1,2	12	063522626010	**MSN2626**
SPORTAGE (K00)								
2.0		87	10/2000 → 08/2003		1,2	12	063522624010	**MSN2624**
2.0		87	10/2000 → 08/2003		0,9	12	063522625010	**MSN2625**
2.0 4WD		87	10/2000 → 08/2003		1,2	12	063522624010	**MSN2624**
2.0 4WD		87	10/2000 → 08/2003		0,9	12	063522625010	**MSN2625**
2.0 i 16V	FE (16 V)	94	10/2000 → 08/2003		0,9	12	063522625010	**MSN2625**
2.0 i 16V 4WD	FE (16 V)	94	04/1994 → 08/2003		1,2	12	063522624010	**MSN2624**
2.0 i 16V 4WD	FE (16 V)	94	12/1998 → 08/2003		0,9	12	063522625010	**MSN2625**
2.0 i 4WD	FE	70	04/1994 → 08/1999		1,2	12	063522624010	**MSN2624**
2.0 i 4WD	FE	70	04/1994 → 08/1999		0,9	12	063522625010	**MSN2625**
2.0 TD 4WD	RF	61	12/1998 → 08/2003		2,0	12	063522610010	**MSN2610**
2.0 TD 4WD	RF	61	10/1997 → 11/1998		2,0	12	063522614010	**MSN2614**

		kW		i	kW	V	LONG	SHORT
LANCIA								
DEDRA (835)								
1.6 16V (835EI)	182 A4.000	76	02/1997 → 07/1999		0,9	12	063223085010	**MSN520**
1.6 i.e. (835AA)	835 A1.000	66	08/1989 → 12/1992		0,9	12	063223085010	**MSN520**
1.6 i.e. (835AB)	835 A1.046	57	08/1989 → 03/1993		0,9	12	063223101010	**MSN274**
1.6 i.e. (835AN)	835 C1.000	55	04/1993 → 07/1999		0,9	12	063223085010	**MSN520**
1.6 LE (835EB) Cat.	159 B9.000	66	07/1994 → 08/1997		0,9	12	063223085010	**MSN520**
1.6 LE (835EB) Cat.	159 B9.000	66	07/1994 → 12/1998		0,9	12	063223101010	**MSN274**
1.8 16V LE (835FG)	182 A2.000	83	03/1996 → 07/1999		1,4	12	063111007010	**MSN807**
1.8 16V LE (835FG)	182 A2.000	83	03/1996 → 10/1998		0,9	12	063223085010	**MSN520**
1.8 GT 16V (835EH)	183 A1.000	96	03/1996 → 07/1999		1,4	12	063111007010	**MSN807**
1.8 GT 16V (835EH)	183 A1.000	96	03/1996 → 07/1999		1,1	12	063521070660	**MSN2069**
1.9 TDS (835EE, 835EF)	160 D1.000, 835 A4.000, 835 A4.046	66	09/1989 → 07/1999		0,9	12	063223085010	**MSN520**
DEDRA SW (835)								
1.6 (835EB)	159 B9.000	66	10/1994 → 08/1997		0,9	12	063223085010	**MSN520**
1.6 (835EB)	159 B9.000	66	10/1994 → 12/1998		0,9	12	063223101010	**MSN274**
1.6 16V (835EI)	182 A4.000	76	02/1997 → 07/1999		0,9	12	063223085010	**MSN520**
1.8 16V LE (835FG)	182 A2.000	83	03/1996 → 07/1999		1,4	12	063111007010	**MSN807**
1.8 16V LE (835FG)	182 A2.000	83	03/1996 → 04/1997		0,9	12	063223085010	**MSN520**
1.8 GT 16V (835EH)	183 A1.000	96	03/1996 → 07/1999		1,4	12	063111007010	**MSN807**
1.8 GT 16V (835EH)	183 A1.000	96	03/1996 → 07/1999		1,1	12	063521070660	**MSN2069**
DELTA I (831AB0)								
1.5 (831AB.025)	831 A1.000, 831 B1.000	63	09/1982 → 06/1987		0,9	12	063223085010	**MSN520**
2.0 16V HF Evo Integrale (831AB.027)	831 E5.000, 831 E5.046	155	06/1993 → 01/1994		0,9	12	063223101010	**MSN274**
DELTA II (836)								
1.4 i.e. (836AF, 836AH)	160 A1.046, 836 A4.000	51	01/1995 → 08/1999		0,9	12	063223085010	**MSN520**
1.4 i.e. (836AF, 836AH)	160 A1.046, 836 A4.000	51	04/1995 → 08/1999		0,9	12	063223101010	**MSN274**
1.6 i.e. (836AD)	835 C1.000	55	11/1993 → 08/1996		0,9	12	063223085010	**MSN520**
1.6 i.e. (836AD)	835 C1.000	55	01/1995 → 08/1999		0,9	12	063223101010	**MSN274**
1.6 i.e. (836AP)	182 A6.000	66	03/1996 → 08/1999		1,0	12	063103022010	**MSN924**
1.6 i.e. (836AP)	182 A6.000	66	03/1996 → 08/1999		0,9	12	063223085010	**MSN520**
1.6 i.e. (836AP)	182 A6.000	66	03/1996 → 08/1999		0,9	12	063223101010	**MSN274**
1.6 i.e. 16V (836AO)	182 A4.000	76	01/1996 → 08/1999		1,0	12	063103022010	**MSN924**
1.6 i.e. 16V (836AO)	182 A4.000	76	01/1996 → 08/1999		1,4	12	063111007010	**MSN807**
1.6 i.e. 16V (836AO)	182 A4.000	76	01/1996 → 08/1999		0,9	12	063223101010	**MSN274**
1.8 i.e. 16V (836AQ)	182 A2.000	83	03/1996 → 04/1998		1,0	12	063103022010	**MSN924**
1.8 i.e. 16V (836AQ)	182 A2.000	83	03/1996 → 08/1999		1,4	12	063111007010	**MSN807**
1.8 i.e. 16V (836AQ)	182 A2.000	83	03/1996 → 04/1998		0,9	12	063223085010	**MSN520**

		kW			kW	V	LONG	SHORT
LANCIA								
DELTA II (836)								
1.8 i.e. 16V (836AQ)	182 A2.000	83	03/1996 → 08/1999		1,1	12	063521070660	**MSN2069**
1.8 i.e. 16V GT (836AR)	183 A1.000	96	03/1996 → 08/1999		1,4	12	063111007010	**MSN807**
1.8 i.e. 16V GT (836AR)	183 A1.000	96	03/1996 → 08/1999		1,1	12	063521070660	**MSN2069**
DELTA III (844)								
1.4		88	09/2008 →		1,0	12	063280060010	**MSN8060**
1.4		110	09/2008 →		1,0	12	063280060010	**MSN8060**
1.4 16V		103	07/2010 →		1,0	12	063280060010	**MSN8060**
2.0 D Multijet	198 A5.000	121	09/2008 →		2,2	12	063521092680	**MSN2085**
2.0 D Multijet		120	09/2008 →		2,2	12	063521092680	**MSN2085**
KAPPA (838A)								
2.0 20V (838AA1AA)	838 A1.000	107	01/1995 → 10/2001		1,4	12	063111007010	**MSN807**
2.0 20V (838AG1AA, 838AG11A)	838 A6.000	114	07/1996 → 10/2001		1,4	12	063111007010	**MSN807**
2.0 20V Turbo (838AM1AA)	175 A3.000	162	06/1998 → 10/2001		1,4	12	063111007010	**MSN807**
2.4 20V (838AC1AA, 838AC11A)	838 A2.000, 838 A2.027	129	01/1995 → 10/2001		1,4	12	063111007010	**MSN807**
KAPPA Coupe (838)								
2.0 20V	838 A6.000	114	03/1998 → 10/2000		1,4	12	063111007010	**MSN807**
2.0 20V Turbo (838CM)	175 A3.000	162	06/1998 → 10/2000		1,4	12	063111007010	**MSN807**
2.4 20V (838CC)	838 A2.000	129	11/1996 → 03/2001		1,4	12	063111007010	**MSN807**
KAPPA SW (838B)								
2.0 20V (838BG1AA)	838 A6.000	114	07/1996 → 10/2001		1,4	12	063111007010	**MSN807**
2.0 20V Turbo (838BM1AA)	175 A3.000	162	06/1998 → 10/2001		1,4	12	063111007010	**MSN807**
2.4 20V (838BC1AA, 838BC11A)	838 A2.000	129	07/1996 → 10/2001		1,4	12	063111007010	**MSN807**
LYBRA (839AX)								
1.6	182 B6.000	76	10/2000 → 09/2005		1,1	12	063521070910	**MSN2017**
1.6 16V (839AXA1A)	182 A4.000	76	06/2000 →		1,1	12	063521070910	**MSN2017**
1.8 16V (839AXB1A, 839AXG1A)	839 A4.000, 839 A7.000, 839 A9.000	96	07/1999 → 12/2006		1,4	12	063111007010	**MSN807**
1.8 16V (839AXB1A, 839AXG1A)	839 A4.000, 839 A7.000, 839 A9.000	96	10/1999 → 02/2002		1,1	12	063521070660	**MSN2069**
1.8 16V (839AXB1A, 839AXG1A)	839 A4.000, 839 A7.000, 839 A9.000	96	03/2002 → 09/2005		1,1	12	063521074110	**MSN2076**
1.9 JTD	937 A2.000	85	06/2001 → 11/2006		1,4	12	063521082390	**MSN2119**
1.9 JTD (839AXD1A)	AR 32302	77	07/1999 → 09/2000		1,8	12	063113002010	**MSN816**
2.0 20V (839AXC11, 839AXC1A)	182 B7.000	113	07/1999 → 09/2000		1,4	12	063111007010	**MSN807**
2.0 20V (839AXC11, 839AXC1A)	182 B7.000	113	10/1999 → 09/2000		1,1	12	063521070660	**MSN2069**
2.0 20V (839AXH1A)	185 A8.000	110	09/2000 → 07/2002		1,4	12	063111007010	**MSN807**
2.0 20V (839AXH1A)	185 A8.000	110	10/2000 → 09/2005		1,1	12	063521074110	**MSN2076**
2.4 JTD (839AXE1A)	839 A5.000, AR 32501	99	10/1999 → 09/2000		2,2	12	063521092680	**MSN2085**
2.4 JTD (839AXL1A)	839 A6.000	103	09/2000 → 05/2002		2,2	12	063521092680	**MSN2085**

		kW			kW	V	LONG	SHORT
LANCIA								
LYBRA SW (839BX)								
1.6	182 B6.000	76	10/2000 → 09/2005		1,1	12	063521070910	**MSN2017**
1.6 16V (839BXA1A)	182 A4.000	76	06/2000		1,1	12	063521070910	**MSN2017**
1.8 16V (839BXB1A, 839BXG1A)	839 A4.000, 839 A7.000	96	07/1999 → 12/2006		1,4	12	063111007010	**MSN807**
1.8 16V (839BXB1A, 839BXG1A)	839 A4.000, 839 A7.000	96	10/1999 → 02/2002		1,1	12	063521070660	**MSN2069**
1.8 16V (839BXB1A, 839BXG1A)	839 A4.000, 839 A7.000	96	03/2002 → 09/2005		1,1	12	063521074110	**MSN2076**
1.9 JTD	937 A2.000	85	06/2001 → 11/2006		1,4	12	063521082390	**MSN2119**
1.9 JTD (839BXD1A)	AR 32302	77	07/1999 → 09/2000		1,8	12	063113002010	**MSN816**
2.0 20V (839BXC11, 839BXC1A)	182 B7.000	113	07/1999 → 09/2000		1,4	12	063111007010	**MSN807**
2.0 20V (839BXC11, 839BXC1A)	182 B7.000	113	10/1999 → 09/2000		1,1	12	063521070660	**MSN2069**
2.0 20V (839BXH1A)	185 A8.000	110	09/2000 → 07/2002		1,4	12	063111007010	**MSN807**
2.0 20V (839BXH1A)	185 A8.000	110	10/2000 → 09/2005		1,1	12	063521074110	**MSN2076**
2.4 JTD (839BXE1A)	839 A5.000, AR 32501	99	10/1999 → 09/2000		2,2	12	063521092680	**MSN2085**
2.4 JTD (839BXL1A)	839 A6.000	103	09/2000 → 05/2002		2,2	12	063521092680	**MSN2085**
MUSA (350)								
1.3 D Multijet	188 A9.000	51	10/2004 → 09/2007		1,3	12	063280045010	**MSN8045**
1.3 D Multijet	199 A3.000	66	09/2006 →		1,3	12	063280045010	**MSN8045**
1.4		70	10/2004 →		1,0	12	063280060010	**MSN8060**
1.4		57	09/2005 →		1,0	12	063280060010	**MSN8060**
1.4		66	10/2007 →		1,0	12	063280060010	**MSN8060**
1.4 LPG		57	11/2010 →		1,0	12	063280061010	**MSN8061**
1.6 D Multijet	350 A2.000	88	07/2008 →		1,4	12	063521082390	**MSN2119**
1.6 D Multijet	350 A2.000	85	09/2008 →		1,4	12	063521082390	**MSN2119**
1.9 D Multijet	188 B2.000	74	10/2004 →		1,4	12	063521082390	**MSN2119**
PHEDRA (179)								
2.0 (179AXA11)	RFN(EW10J4)	100	09/2002 → 09/2005		1,4	12	063521084000	**MSN2083**
2.0 D Multijet	RHR	100	07/2006 →		2,0	12	063280090010	**MSN8090**
2.0 JTD	RHK	88	06/2006 →		2,0	12	063280090010	**MSN8090**
2.0 JTD	RHM	79	07/2003 →		2,0	12	063280090010	**MSN8090**
2.0 JTD (179AXB1A)	RHW(DW10ATED4)	80	09/2002 →		2,0	12	063280090010	**MSN8090**
2.2 JTD (179AXC1A)	4HW(DW12ATED4)	94	09/2002 →		2,0	12	063280090010	**MSN8090**
PRISMA (831AB0)								
1.5	138 C2.048, 831 B1.048	55	12/1985 → 12/1986		0,9	12	063223101010	**MSN274**
1.5	831 A1.000	63	01/1983 → 04/1986		0,9	12	063223085010	**MSN520**
1.5	831 B1.000	59	08/1986 → 12/1989		0,9	12	063223085010	**MSN520**
THESIS (841AX)								
2.0 Turbo (841AXA1B03)	841 E.000	136	07/2002 → 06/2009		1,4	12	063111007010	**MSN807**
2.4 (841AXB1B00)	841 D.000	125	07/2002 → 08/2006		1,4	12	063111007010	**MSN807**
2.4 JTD (841AXD1B02)	841 C.000	110	07/2002 → 02/2005		2,2	12	063521092680	**MSN2085**

		kW			kW	V	LONG	SHORT
LANCIA								
Y (840A)								
1.1 (840AE)	176 B2.000	40	01/2000 → 09/2003		0,8	12	063101015010	**MSN829**
1.1 (840AE)	176 B2.000	40	04/1997 → 06/2000		0,9	12	063102018010	**MSN923**
1.1 (840AE)	176 B2.000	40	04/1997 → 06/2000		0,8	12	063521130060	**MSN2091**
1.2 (840AA, 840AF1A)	188 A4.000, 840 A3.000	44	01/2000 → 09/2003		0,8	12	063101015010	**MSN829**
1.2 (840AA, 840AF1A)	188 A4.000, 840 A3.000	44	03/1996 → 06/2000		0,9	12	063102018010	**MSN923**
1.2 (840AA, 840AF1A)	188 A4.000, 840 A3.000	44	06/2000 → 06/2003		1,0	12	063103025010	**MSN927**
1.2 (840AA, 840AF1A)	188 A4.000, 840 A3.000	44	04/1997 → 06/2000		0,8	12	063521130060	**MSN2091**
1.2 16V (840AD)	176 B9.000	63	04/1997 → 09/2003		0,8	12	063101015010	**MSN829**
1.2 16V (840AD)	176 B9.000	63	04/1997 → 06/2000		0,9	12	063102018010	**MSN923**
1.2 16V (840AG1A)	188 A5.000	59	10/2000 → 09/2003		0,9	12	063102018010	**MSN923**
1.2 16V (840AG1A)	188 A5.000	59	10/2000 → 09/2003		1,0	12	063103025010	**MSN927**
Y10 (156)								
1.0 Fire	156 A 2.000	37	07/1989 → 02/1990		0,8	12	063101023010	**MSN410**
1.0 Fire (156AA)	156 A 2.000	33	03/1985 → 06/1989		0,8	12	063101023010	**MSN410**
1.0 Fire (156AE) Cat.	156 A2.246	33	10/1987 → 12/1990		0,8	12	063101023010	**MSN410**
1.0 Fire (156B, 156AD)	156 A 2.100	32	03/1989 → 06/1991		0,8	12	063101023010	**MSN410**
1.0 Fire 4WD	156 A 2.000	37	12/1987 → 07/1989		0,8	12	063101023010	**MSN410**
1.0 Fire 4WD	156 A 2.100	32	12/1986 → 02/1989		0,8	12	063101023010	**MSN410**
1.0 Fire 4WD (156AE)	156 A2.246	33	12/1987 → 12/1989		0,8	12	063101023010	**MSN410**
1.0 Turbo (156D)	156 A 1.000	62	03/1985 → 02/1989		0,9	12	063223101010	**MSN274**
1.1 Avenue (156AG)	176 B2.000	40	01/1995 → 12/1995		0,8	12	063101023010	**MSN410**
1.1 Avenue (156AG)	176 B2.000	40	01/1995 → 12/1995		0,9	12	063102018010	**MSN923**
1.1 Avenue 4WD (156AG)	176 B2.000	40	01/1995 → 12/1995		0,8	12	063101023010	**MSN410**
1.1 Avenue 4WD (156AG)	176 B2.000	40	01/1995 → 12/1995		0,9	12	063102018010	**MSN923**
1.1 i.e (156AC)	156 C.000	42	08/1989 → 06/1992		0,8	12	063101023010	**MSN410**
1.1 i.e 4WD (156AC)	156 C.000	42	08/1989 → 06/1992		0,8	12	063101023010	**MSN410**
1.1 i.e. Fire (156AG)	156 C.046	37	01/1993 → 09/1995		0,8	12	063101015010	**MSN829**
1.1 i.e. Fire (156AG)	156 C.046	37	09/1992 → 09/1995		0,8	12	063101023010	**MSN410**
1.1 i.e. Fire (156AG)	156 C.046	37	07/1989 → 09/1995		0,9	12	063102018010	**MSN923**
1.1 i.e. Fire 4WD (156AG)	156 C.046	37	09/1992 → 12/1995		0,8	12	063101023010	**MSN410**
1.1 i.e. Fire 4WD (156AG)	156 C.046	37	09/1992 → 12/1995		0,9	12	063102018010	**MSN923**
1.3 i.e. Fire (156AF)	146 A 5.046, 156 B.000	53	02/1989 → 12/1995		0,9	12	063223101010	**MSN274**
YPSILON (843)								
1.2	188 A4.000	44	10/2003 →		0,9	12	063102022010	**MSN418**
1.2	188 A4.000	44	02/2005 →		0,8	12	063520003200	**MSN2116**
1.2	188 A5.000	59	10/2003 → 06/2006		0,9	12	063102022010	**MSN418**
1.2	188 A5.000	59	02/2005 → 09/2006		0,8	12	063520003200	**MSN2116**
1.2		51	08/2010 →		1,0	12	063280060010	**MSN8060**
1.2		59	10/2003 →		1,0	12	063280060010	**MSN8060**
1.2		44	10/2003 →		1,0	12	063280060010	**MSN8060**
1.3 D Multijet	199 A2.000	55	09/2006 →		1,3	12	063280045010	**MSN8045**
1.3 D Multijet	199 A3.000	77	12/2007 →		1,3	12	063280045010	**MSN8045**
1.3 D Multijet	199 A3.000	66	09/2006 →		1,3	12	063280045010	**MSN8045**
1.3 JTD	188 A9.000	51	10/2003 →		1,3	12	063280045010	**MSN8045**
1.4 LPG		57	11/2010 →		1,0	12	063280061010	**MSN8061**

		kW			kW	V	LONG	SHORT
LANCIA								
YPSILON (846)								
1.2		51	05/2011 →		1,0	12	063280060010	**MSN8060**
1.2 Bifuel		49	05/2011 →		1,0	12	063280061010	**MSN8061**
ZETA (220)								
2.0 16V (220AL5)	RFV	97	06/1999 → 07/2000		1,1	12	063521070630	**MSN2015**
2.0 Turbo (220AD5, 220CD5)	RGX	108	05/1995 → 06/1999		1,1	12	063521070630	**MSN2015**
LAND ROVER								
88/109								
3.5		68	01/1980 → 03/1983		1,4	12	063226801010	**MSN139**
90/110 (DHMC)								
3.5 V8		100	11/1983 → 07/1990		1,4	12	063226801010	**MSN139**
DEFENDER (LD)								
3.5 4x4		100	01/1993 → 12/1998		1,4	12	063226801010	**MSN139**
DEFENDER Station Wagon (LD)								
3.5 4x4		100	01/1993 → 12/1998		1,4	12	063226801010	**MSN139**
3.9 V8		136	11/1998 → 12/2001		1,4	12	063226801010	**MSN139**
DISCOVERY I (LJ, LG)								
3.5 (SALLJG)	22 D	113	10/1989 → 06/1994		1,4	12	063226801010	**MSN139**
3.9 V8	35 D, 36 D	134	10/1993 → 10/1998		1,4	12	063226801010	**MSN139**
DISCOVERY II (LJ, LT)								
3.9 V8		134	06/1994 → 11/1998		1,4	12	063226801010	**MSN139**
4.0 V8		136	01/1999 → 06/2004		1,4	12	063226801010	**MSN139**
DISCOVERY III (TAA)								
4.0 V6 4x4	406PN	156	10/2004 → 08/2009		1,4	12	063226801010	**MSN139**
RANGE ROVER I (AE, AN, HAA, HAB, HAM, HBM, RE, RN)								
3.5	31 D	107	01/1987 → 09/1990		1,4	12	063226801010	**MSN139**
3.5 Vogue	24 D, 25 D	120	10/1985 → 09/1990		1,4	12	063226801010	**MSN139**
3.9 Cat.	37 D, 38 D	127	11/1988 → 08/1992		1,4	12	063226801010	**MSN139**
3.9 Vogue SEI	35 D, 36 D	134	11/1988 → 07/1994		1,4	12	063226801010	**MSN139**
4.3 Vogue LSE	40 D	149	09/1992 → 07/1994		1,4	12	063226801010	**MSN139**
RANGE ROVER II (LP)								
3.9	42 D	140	09/1994 → 03/2002		1,4	12	063226801010	**MSN139**
4.0		136	06/1998 → 03/2002		1,4	12	063226801010	**MSN139**
4.6	46 D	165	09/1994 → 03/2002		1,4	12	063226801010	**MSN139**
4.6		160	06/1998 → 03/2002		1,4	12	063226801010	**MSN139**
LDV								
CONVOY Furgonato								
2.5 TDI	ET 70	74	10/1998 →		3,0	12	063280020010	**MSN8020**
LEXUS								
IS II (_XE2_, _SE2_)								
220 d (ALE20)	2AD-FHV	130	10/2005 →		2,0	12	063280059010	**MSN8059**
MAZDA								
121 III (JASM, JBSM)								
1.3	J4R, J4T	44	03/1996 →		1,1	12	063280006010	**MSN8006**

		kW			kW	V	LONG	SHORT
MAZDA								
2 (DY)								
1.25	FUJA	55	04/2003 →		1,2	12	063280010010	**MSN8010**
1.4	FXJA	59	04/2003 →		1,2	12	063280010010	**MSN8010**
1.6	FYJA	74	04/2003 →		1,2	12	063280010010	**MSN8010**
3 (BK)								
1.6 DI Turbo	Y601	80	06/2004 →		1,2	12	063280029010	**MSN8029**
3 Tre volumi (BK)								
1.6 DI Turbo	Y601	80	06/2004 →		1,2	12	063280029010	**MSN8029**
323 C IV (BG)								
1.3	B3E	49	09/1989 → 07/1994		0,9	12	063522625010	**MSN2625**
1.3 16V		54	09/1989 → 07/1994		0,9	12	063522625010	**MSN2625**
1.6	B6E	62	09/1989 → 06/1991		0,9	12	063522625010	**MSN2625**
1.6 16V	B6	65	03/1991 → 10/1994		0,9	12	063522625010	**MSN2625**
1.8 16V	BP22, BP31	103	09/1989 → 03/1993		0,9	12	063522625010	**MSN2625**
1.8 16V 4WD	BP	76	11/1991 → 12/1993		0,9	12	063522625010	**MSN2625**
1.8 16V GT	BP (DOHC)	94	09/1989 → 03/1993		0,9	12	063522625010	**MSN2625**
1.8 16V Turbo 4WD	BP Turbo	120	09/1990 → 12/1992		0,9	12	063522625010	**MSN2625**
1.8 16V Turbo 4WD		136	01/1993 → 07/1994		0,9	12	063522625010	**MSN2625**
323 C V (BA)								
1.3 16V	B3 (16V)	54	08/1994 → 09/1998		0,9	12	063522625010	**MSN2625**
1.5 16V	Z5-DE	65	08/1994 → 09/1998		0,9	12	063522625010	**MSN2625**
1.8 16V	BP-ZE	84	08/1994 → 09/1998		0,9	12	063522625010	**MSN2625**
323 F IV (BG)								
1.6	B6E	62	09/1989 → 06/1991		0,9	12	063522625010	**MSN2625**
1.6 16V	B6	65	03/1991 → 10/1994		0,9	12	063522625010	**MSN2625**
1.8 16V	BP	76	08/1989 → 07/1994		0,9	12	063522625010	**MSN2625**
1.8 16V	BP31	103	09/1989 → 03/1993		1,4	12	063280014010	**MSN8014**
1.8 16V	BP31	103	09/1989 → 03/1993		0,9	12	063522625010	**MSN2625**
1.8 16V GT	BP (DOHC)	94	08/1989 → 07/1994		0,9	12	063522625010	**MSN2625**
1.8 4WD		76	01/1991 → 04/1994		0,9	12	063522625010	**MSN2625**
323 F V (BA)								
1.5 16V	Z5-DE	65	07/1994 → 09/1998		0,9	12	063522625010	**MSN2625**
1.8 16V	BP-ZE	84	08/1994 → 09/1998		0,9	12	063522625010	**MSN2625**
323 F VI (BJ)								
1.4 16V	B3 ME	54	09/1998 → 01/2001		0,9	12	063522625010	**MSN2625**
1.6	ZM	70	01/2001 → 05/2004		0,9	12	063522625010	**MSN2625**
1.6	ZM	72	01/2001 → 05/2004		0,9	12	063522625010	**MSN2625**
2.0	FS7E, FS7G	96	01/2001 → 05/2004		1,2	12	063522624010	**MSN2624**
323 III (BF)								
1.1	E1	40	08/1985 → 04/1990		0,9	12	063522625010	**MSN2625**
1.3	E3	44	08/1985 → 05/1989		0,9	12	063522625010	**MSN2625**
1.4	B3	44	04/1987 → 07/1989		0,9	12	063522625010	**MSN2625**
1.5	B5	54	09/1987 → 10/1989		0,9	12	063522625010	**MSN2625**
1.5	E5	55	08/1985 → 05/1989		0,9	12	063522625010	**MSN2625**
1.5 i	E5E3	70	08/1985 → 05/1989		0,9	12	063522625010	**MSN2625**

		kW		i	kW	V	LONG	SHORT
MAZDA								
323 III (BF)								
1.6 GLX	B68	54	06/1986 → 03/1987		0,9	12	063522625010	**MSN2625**
1.6 GT	B6	63	11/1986 → 10/1989		0,9	12	063522625010	**MSN2625**
1.6 GT	B6 (SOHC)	77	01/1986 → 12/1988		0,9	12	063522625010	**MSN2625**
1.6 GT Turbo	B6T	103	10/1985 → 11/1991		0,9	12	063522625010	**MSN2625**
323 III Hatchback (BF)								
1.1	E1	40	09/1985 → 10/1989		0,9	12	063522625010	**MSN2625**
1.3 i		49	09/1985 → 08/1989		0,9	12	063522625010	**MSN2625**
1.4	B3	44	09/1987 → 10/1989		0,9	12	063522625010	**MSN2625**
1.5	B5	54	09/1987 → 10/1989		0,9	12	063522625010	**MSN2625**
1.5	E5	55	08/1985 → 05/1989		0,9	12	063522625010	**MSN2625**
1.5 i	E5E3	70	08/1985 → 05/1989		0,9	12	063522625010	**MSN2625**
1.6	B68	54	09/1987 → 10/1989		0,9	12	063522625010	**MSN2625**
1.6 GT	B6	63	09/1987 → 10/1989		0,9	12	063522625010	**MSN2625**
1.6 GT	B6 (SOHC)	77	08/1985 → 12/1988		0,9	12	063522625010	**MSN2625**
1.6 GT Turbo (BF1)	B6T	103	10/1985 → 11/1991		0,9	12	063522625010	**MSN2625**
1.6 GT Turbo 4WD (BF2)	B6T	103	10/1987 → 11/1991		0,9	12	063522625010	**MSN2625**
1.6 GT Turbo 4WD (BF2)		110	08/1987 → 10/1989		0,9	12	063522625010	**MSN2625**
323 III Station Wagon (BW)								
1.3	E3	44	07/1986 → 04/1990		0,9	12	063522625010	**MSN2625**
1.5	B5, B50, B53	54	01/1987 → 05/1989		0,9	12	063522625010	**MSN2625**
1.5	B50, B53, E5	55	05/1986 → 05/1989		0,9	12	063522625010	**MSN2625**
1.6	B6, B65M, B6E	63	09/1986 → 10/1995		0,9	12	063522625010	**MSN2625**
1.6	B68	54	09/1987 → 10/1989		0,9	12	063522625010	**MSN2625**
1.6 4x4	B65M, B6E	63	05/1990 → 03/1993		0,9	12	063522625010	**MSN2625**
323 P V (BA)								
1.3 16V	B3 (16V)	54	10/1996 →		0,9	12	063522625010	**MSN2625**
1.5 16V	Z5-DE	65	10/1996 →		0,9	12	063522625010	**MSN2625**
323 S IV (BG)								
1.3	B383, B3E	49	09/1989 → 06/1991		0,9	12	063522625010	**MSN2625**
1.3 16V	B3 (16V)	54	04/1991 → 07/1994		0,9	12	063522625010	**MSN2625**
1.6	B6E	62	09/1989 → 06/1991		0,9	12	063522625010	**MSN2625**
1.6 16V	B6	65	08/1989 → 10/1994		0,9	12	063522625010	**MSN2625**
1.8 16V	BP52	76	08/1989 → 07/1994		0,9	12	063522625010	**MSN2625**
1.8 16V 4WD	BP52	76	09/1991 → 07/1994		0,9	12	063522625010	**MSN2625**
1.8 16V GT	BP (DOHC)	94	06/1989 → 07/1994		0,9	12	063522625010	**MSN2625**
1.8 16V Turbo 4WD	BP Turbo	120	01/1991 → 07/1994		0,9	12	063522625010	**MSN2625**
323 S V (BA)								
1.3 16V	B3 (16V)	54	08/1994 → 09/1998		0,9	12	063522625010	**MSN2625**
1.5 16V	Z5-DE	65	08/1994 → 09/1998		0,9	12	063522625010	**MSN2625**
1.8 16V	BP-ZE	84	08/1994 → 09/1998		0,9	12	063522625010	**MSN2625**
323 S VI (BJ)								
1.5 16V		65	09/1998 → 01/2001		0,9	12	063522625010	**MSN2625**
1.6	ZM	72	01/2001 → 05/2004		0,9	12	063522625010	**MSN2625**
2.0	FS7E, FS7G	96	01/2001 → 05/2004		1,2	12	063522624010	**MSN2624**

		kW		i	kW	V	LONG	SHORT
MAZDA								
626 II (GC)								
1.6	F6	59	11/1982 → 06/1987		0,9	12	063522625010	**MSN2625**
2.0	FE	74	03/1983 → 09/1987		0,9	12	063522625010	**MSN2625**
2.0	FE	88	01/1986 → 09/1987		0,9	12	063522625010	**MSN2625**
2.0		68	11/1986 → 09/1987		0,9	12	063522625010	**MSN2625**
626 II Hatchback (GC)								
1.6	F6	59	03/1983 → 09/1987		0,9	12	063522625010	**MSN2625**
1.6		55	03/1983 → 09/1987		0,9	12	063522625010	**MSN2625**
2.0	FE	74	03/1983 → 09/1987		0,9	12	063522625010	**MSN2625**
2.0	FE	88	01/1986 → 09/1987		0,9	12	063522625010	**MSN2625**
2.0		68	01/1985 → 09/1987		0,9	12	063522625010	**MSN2625**
626 III (GD)								
1.6		60	06/1987 → 05/1992		0,9	12	063522625010	**MSN2625**
1.8	F8 (12V)	65	11/1987 → 05/1992		0,9	12	063522625010	**MSN2625**
2.0	FE	66	09/1987 → 10/1990		0,9	12	063522625010	**MSN2625**
2.0 12V	FE (12V)	79	09/1987 → 05/1992		0,9	12	063522625010	**MSN2625**
2.0 16V	FE Kat. (16V)	103	11/1987 → 05/1992		0,9	12	063522625010	**MSN2625**
2.0 16V	FE Kat. (16V)	109	07/1987 → 09/1989		0,9	12	063522625010	**MSN2625**
2.2 12V	F2	85	11/1987 → 07/1991		1,2	12	063522624010	**MSN2624**
2.2 12V	F2	85	11/1987 → 07/1991		0,9	12	063522625010	**MSN2625**
626 III Coupe (GD)								
1.6		60	06/1987 → 05/1992		0,9	12	063522625010	**MSN2625**
1.8	F8 (12V)	65	09/1987 → 08/1991		0,9	12	063522625010	**MSN2625**
2.0	FE	66	09/1987 → 10/1990		0,9	12	063522625010	**MSN2625**
2.0 12V	FE (12V)	79	09/1987 → 12/1988		0,9	12	063522625010	**MSN2625**
2.0 16V	FE Kat. (16V)	109	06/1987 → 09/1989		0,9	12	063522625010	**MSN2625**
2.0 16V	FE Kat. (16V)	103	12/1987 → 10/1990		0,9	12	063522625010	**MSN2625**
2.2 12V	F2	85	04/1988 → 12/1991		1,2	12	063522624010	**MSN2624**
626 III Hatchback (GD)								
1.6		60	06/1987 → 05/1992		0,9	12	063522625010	**MSN2625**
1.8	F8 (12V)	65	11/1987 → 05/1992		0,9	12	063522625010	**MSN2625**
1.8		69	11/1987 → 05/1992		0,9	12	063522625010	**MSN2625**
2.0	FE	66	09/1987 → 10/1990		0,9	12	063522625010	**MSN2625**
2.0 12V	FE (12V)	79	11/1987 → 05/1992		0,9	12	063522625010	**MSN2625**
2.0 16V	FE Kat. (16V)	109	06/1987 → 08/1989		0,9	12	063522625010	**MSN2625**
2.0 16V	FE Kat. (16V)	103	11/1987 → 10/1990		0,9	12	063522625010	**MSN2625**
2.2 12V	F2	85	06/1988 → 04/1992		1,2	12	063522624010	**MSN2624**
2.2 12V	F2	85	06/1988 → 04/1992		0,9	12	063522625010	**MSN2625**
2.2 12V 4WD	F2	85	11/1987 → 07/1990		0,9	12	063522625010	**MSN2625**
626 III Station Wagon (GV)								
1.8	F8 (12V)	65	01/1988 → 03/1992		0,9	12	063522625010	**MSN2625**
2.0	FE	66	10/1988 → 09/1997		1,2	12	063522624010	**MSN2624**
2.0 12V	FE (12V)	81	09/1987 → 01/1990		0,9	12	063522625010	**MSN2625**
2.0 16V	FE Kat. (16V)	103	01/1988 → 03/1992		1,2	12	063522624010	**MSN2624**
2.0 GLX		86	04/1992 → 02/1995		1,2	12	063522624010	**MSN2624**
2.0 i 16V		110	11/1994 → 09/1997		0,9	12	063522625010	**MSN2625**

		kW		i	kW	V	LONG	SHORT
MAZDA								
626 III Station Wagon (GV)								
2.2 12V	F2	85	03/1989 → 11/1996		1,2	12	063522624010	**MSN2624**
2.2 12V 4WD	F2, F2L1	85	05/1991 → 11/1992		1,2	12	063522624010	**MSN2624**
929 II (HB)								
2.0	FE	74	03/1984 → 07/1987		0,9	12	063522625010	**MSN2625**
2.0 i GLX	FE	88	10/1984 → 07/1987		0,9	12	063522625010	**MSN2625**
929 II Coupe (HB)								
2.0	FE	74	03/1984 → 07/1987		0,9	12	063522625010	**MSN2625**
2.0 i Turbo	FE	88	10/1984 → 07/1987		0,9	12	063522625010	**MSN2625**
929 III (HC)								
2.0	FE, FEFA	85	06/1987 → 12/1988		0,9	12	063522625010	**MSN2625**
2.2 12V	F2, F21, F2E	85	01/1988 → 04/1989		1,2	12	063522624010	**MSN2624**
2.2 12V	F2-C	94	04/1989 → 06/1991		1,2	12	063522624010	**MSN2624**
2.2 i	F2-EGI	100	05/1987 → 12/1988		1,2	12	063522624010	**MSN2624**
B-SERIE (UF)								
2.2	F2L8	68	08/1991 → 12/1996		0,9	12	063522625010	**MSN2625**
2.6 4x4		73	01/1987 → 10/1990		1,2	12	063522617010	**MSN2617**
DEMIO (DW)								
1.3 16V	B3 ME	46	08/1998 →		0,9	12	063522625010	**MSN2625**
1.3 i 16V	B3 (16V)	53	08/1998 → 04/2000		0,9	12	063522625010	**MSN2625**
E-SERIE Autobus (SR1)								
E2000	FE18, FEV4	63	11/1984 → 02/1988		0,9	12	063522625010	**MSN2625**
E2000 4WD	FEBN	60	10/1988 → 09/1989		0,9	12	063522625010	**MSN2625**
E-SERIE Furgonato (SR2)								
E2000	FE, FE60, FE61	60	03/1991 → 05/1994		0,9	12	063522625010	**MSN2625**
E2000	FE18, FE58	63	05/1985 → 04/1989		0,9	12	063522625010	**MSN2625**
MPV II (LW)								
2.0	FS	88	08/2000 → 07/2002		1,2	12	063522624010	**MSN2624**
MX-3 (EC)								
1.6 i	B69	65	07/1991 →		0,9	12	063522625010	**MSN2625**
PREMACY (CP)								
2.0	LFF7	107	02/2005 →		1,2	12	063522624010	**MSN2624**
2.3 SVT		122	02/2005 →		1,2	12	063522624010	**MSN2624**
TRIBUTE (EP)								
3.0 V6 24V 4WD	AJ	145	03/2000 →		1,4	12	063280032010	**MSN8032**
XEDOS 9 (TA)								
2.5 V6	KL	120	07/2000 →		1,2	12	063522624010	**MSN2624**
MERCEDES								
CLASSE A (W169)								
A 160 CDI (169.006, 169.306)	OM 640.942	60	09/2004 →		1,6	12	063521082170	**MSN2081**
A 180 CDI (169.007, 169.307)	OM 640.940	80	09/2004 →		1,6	12	063521082170	**MSN2081**
A 200 CDI (169.008, 169.308)	OM 640.941	103	09/2004 →		1,6	12	063521082170	**MSN2081**

		kW			kW	V	LONG	SHORT
MERCEDES								
CLASSE B (W245)								
B 180 CDI (245.207)	OM 640.940	80	04/2005 →		1,6	12	063521082170	**MSN2081**
B 200 CDI (245.208)	OM 640.941	103	04/2005 →		1,6	12	063521082170	**MSN2081**
CLASSE C (W202)								
C 180 (202.018)	M 111.920, M 111.921	90	03/1993 → 04/2000		1,1	12	063521074030	**MSN2074**
C 180 (202.018)	M 111.921	89	09/1995 → 04/2000		1,1	12	063521074030	**MSN2074**
C 200 (202.020)	M 111.941, M 111.945	100	01/1994 → 04/2000		1,1	12	063521074030	**MSN2074**
C 200 CDI (202.134)	OM 611.960	75	03/1998 → 04/2000		2,0	12	063521092500	**MSN2025**
C 200 D (202.120)	OM 601.913	55	03/1993 → 08/1995		2,0	12	063521092500	**MSN2025**
C 200 D (202.122)	OM 604.915	65	10/1996 → 06/1999		2,0	12	063521092500	**MSN2025**
C 200 Kompressor (202.025)	M 111.944	141	11/1996 → 04/2000		1,1	12	063521074030	**MSN2074**
C 200 Kompressor (202.025)	M 111.944	132	10/1995 → 04/2000		1,1	12	063521074030	**MSN2074**
C 220 (202.022)	M 111.961	110	03/1993 → 09/1996		1,1	12	063521074030	**MSN2074**
C 220 CDI (202.133)	OM 611.960	92	12/1997 → 04/2000		2,0	12	063521092500	**MSN2025**
C 220 D	OM 604.910	55	07/1996 → 06/1999		2,0	12	063521092500	**MSN2025**
C 220 D (202.121)	OM 604.910	70	08/1993 → 06/1999		2,0	12	063521092500	**MSN2025**
C 230 (202.023)	M 111.974	110	09/1996 → 06/1997		1,1	12	063521074030	**MSN2074**
C 230 Kompressor (202.024)	M 111.975	142	10/1995 → 04/2000		1,1	12	063521074030	**MSN2074**
C 250 D (202.125)	OM 605.910	83	05/1993 → 08/1995		2,0	12	063521092500	**MSN2025**
C 250 Turbo-D (202.128)	OM 605.960	110	10/1995 → 05/2000		2,0	12	063521092500	**MSN2025**
CLASSE C (W203)								
C 200 CDI	OM 646.962	75	03/2003 →		2,0	12	063521092500	**MSN2025**
C 200 CDI (203.004)	OM 611.962	85	10/2000 → 02/2003		2,0	12	063521092500	**MSN2025**
C 200 CDI (203.007)	OM 646.962	90	04/2003 →		2,0	12	063521092500	**MSN2025**
C 220 CDI (203.006)	OM 611.962	105	05/2000 → 02/2003		2,0	12	063521092500	**MSN2025**
C 220 CDI (203.008)	OM 646.963	110	04/2003 →		2,0	12	063521092500	**MSN2025**
C 270 CDI (203.016)	OM 612.962	125	12/2000 → 08/2004		2,0	12	063521092500	**MSN2025**
C 30 CDI AMG (203.018)	OM 612.990	170	01/2003 → 08/2004		2,0	12	063521092500	**MSN2025**
CLASSE C Coupe (CL203)								
C 200 CDI (203.707)	OM 646.962	90	07/2003 →		2,0	12	063521092500	**MSN2025**
C 220 CDI (203.706)	OM 611.962	105	03/2001 → 02/2003		2,0	12	063521092500	**MSN2025**
C 220 CDI (203.708)	OM 646.963	110	02/2004 →		2,0	12	063521092500	**MSN2025**
C 30 CDI AMG (203.718)	OM 612.990	170	09/2002 → 08/2004		2,0	12	063521092500	**MSN2025**
CLASSE C Station wagon (S202)								
C 180 T (202.078)	M 111.920, M 111.921	90	06/1996 → 06/2000		1,1	12	063521074030	**MSN2074**
C 200 T (202.080)	M 111.941, M 111.945	100	06/1996 → 06/2000		1,1	12	063521074030	**MSN2074**
C 200 T CDI (202.194)	OM 611.960	75	03/1998 → 02/2001		2,0	12	063521092500	**MSN2025**
C 200 T D (202.180)	OM 604.915	65	10/1996 → 03/2001		2,0	12	063521092500	**MSN2025**
C 200 T Kompressor (202.082)	M 111.944	141	09/1997 → 03/2000		1,1	12	063521074030	**MSN2074**
C 220 T CDI (202.193)	OM 611.960	92	12/1997 → 02/2001		2,0	12	063521092500	**MSN2025**
C 220 T D	OM 604.910	55	06/1996 → 06/1999		2,0	12	063521092500	**MSN2025**

		kW			kW	V	LONG	SHORT
MERCEDES								
CLASSE C Station wagon (S202)								
C 220 T D (202.182)	OM 604.910	70	06/1996 → 09/1998		2,0	12	063521092500	**MSN2025**
C 230 T (202.083)	M 111.974	110	06/1996 → 05/1997		1,1	12	063521074030	**MSN2074**
C 230 T Kompressor (202.085)	M 111.975	142	06/1997 → 06/2000		1,1	12	063521074030	**MSN2074**
C 250 T Turbo-D (202.188)	OM 605.960	110	06/1996 → 03/2001		2,0	12	063521092500	**MSN2025**
CLASSE C T-Model (S203)								
C 200 CDI	OM 646.962	75	03/2003 →		2,0	12	063521092500	**MSN2025**
C 200 CDI (203.204)	OM 611.962	85	10/2001 → 02/2003		2,0	12	063521092500	**MSN2025**
C 200 CDI (203.207)	OM 646.962	90	04/2003 → 08/2007		2,0	12	063521092500	**MSN2025**
C 220 CDI (203.206)	OM 611.962	105	03/2001 → 02/2003		2,0	12	063521092500	**MSN2025**
C 220 CDI (203.208)	OM 646.963	110	02/2004 → 08/2007		2,0	12	063521092500	**MSN2025**
C 270 CDI (203.216)	OM 612.962	125	03/2001 → 08/2004		2,0	12	063521092500	**MSN2025**
C 30 CDI AMG (203.218)	OM 612.990	170	01/2003 → 08/2004		2,0	12	063521092500	**MSN2025**
CLASSE E (W124)								
E 200 (124.019)	M 111.940	100	07/1993 → 06/1995		1,1	12	063521074030	**MSN2074**
E 220 (124.022)	M 111.960	110	07/1993 → 06/1995		1,1	12	063521074030	**MSN2074**
E 250 D (124.126, 124.129)	OM 605.911	83	07/1993 → 06/1995		2,0	12	063521092500	**MSN2025**
CLASSE E (W210)								
E 200 (210.035)	M 111.942	100	06/1995 → 06/2000		1,1	12	063521074030	**MSN2074**
E 200 CDI (210.007)	OM 611.961	75	07/1998 → 03/2002		2,0	12	063521092500	**MSN2025**
E 200 CDI (210.007)	OM 611.961	85	07/1999 → 03/2002		2,0	12	063521092500	**MSN2025**
E 200 D (210.003)	OM 604.917	65	03/1997 → 05/1999		2,0	12	063521092500	**MSN2025**
E 200 Kompressor (210.045)	M 111.947	137	09/1997 → 06/2000		1,1	12	063521074030	**MSN2074**
E 220 CDI (210.006)	OM 611.961	92	07/1998 → 05/1999		2,0	12	063521092500	**MSN2025**
E 220 CDI (210.006)	OM 611.961	105	07/1999 → 03/2002		2,0	12	063521092500	**MSN2025**
E 220 D	OM 604.912	55	05/1996 → 03/2002		2,0	12	063521092500	**MSN2025**
E 220 D (210.004)	OM 604.912	70	06/1995 → 05/1999		2,0	12	063521092500	**MSN2025**
E 230 (210.037)	M 111.970	110	06/1995 → 06/1997		1,1	12	063521074030	**MSN2074**
E 250 D (210.010)	OM 605.912	83	06/1995 → 05/1999		2,0	12	063521092500	**MSN2025**
E 250 Turbo-D (210.015)	OM 605.962	110	09/1997 → 05/1999		2,0	12	063521092500	**MSN2025**
E 270 CDI (210.016)	OM 612.961	125	07/1999 → 03/2002		2,0	12	063521092500	**MSN2025**
E 290 Turbo-D (210.017)	OM 602.982	95	03/1996 → 05/1999		2,0	12	063521092500	**MSN2025**
E 320 CDI (210.026)	OM 613.961	145	07/1999 → 03/2002		2,0	12	063521092500	**MSN2025**
CLASSE E (W211)								
E 200 CDI (211.004)	OM 646.951	75	07/2002 → 09/2008		2,0	12	063521092500	**MSN2025**
E 200 CDI (211.004)	OM 646.951	90	07/2002 → 03/2006		2,0	12	063521092500	**MSN2025**
E 220 CDI (211.006)	OM 646.961	100	03/2002 →		2,0	12	063521092500	**MSN2025**
E 220 CDI (211.006)	OM 646.961	110	03/2002 →		2,0	12	063521092500	**MSN2025**
E 270 CDI (211.016)	OM 647.961	130	03/2002 → 03/2005		2,0	12	063521092500	**MSN2025**
E 280 CDI (211.023)	OM 648.961	130	05/2004 → 03/2005		2,0	12	063521092500	**MSN2025**
E 320 CDI (211.026)	OM 648.961	150	11/2002 →		2,0	12	063521092500	**MSN2025**
CLASSE E Cabriolet (A124)								
E 200 (124.060)	807.04	100	07/1993 → 03/1998		1,1	12	063521074030	**MSN2074**

		kW			kW	V	LONG	SHORT
MERCEDES								
CLASSE E Cabriolet (A124)								
E 220 (124.062)	M 111.960	110	07/1993 → 03/1998		1,1	12	063521074030	**MSN2074**
CLASSE E Coupe (C124)								
E 200 (124.040)	M 111.940	100	07/1993 → 06/1997		1,1	12	063521074030	**MSN2074**
E 220 (124.042)	M 111.960	110	07/1993 → 06/1997		1,1	12	063521074030	**MSN2074**
CLASSE E Station wagon (S124)								
E 200 T (124.079)	M 111.940	100	07/1993 → 05/1996		1,1	12	063521074030	**MSN2074**
E 220 T (124.082)	M 111.960	110	07/1993 → 05/1996		1,1	12	063521074030	**MSN2074**
E 250 T D (124.186)	OM 605.911	83	06/1993 → 06/1996		2,0	12	063521092500	**MSN2025**
CLASSE E Station wagon (S210)								
E 200 T (210.235)	M 111.942	100	06/1996 → 08/2000		1,1	12	063521074030	**MSN2074**
E 200 T Kompressor (210.245)	M 111.947	137	06/1997 → 03/2003		1,1	12	063521074030	**MSN2074**
E 220 T CDI (210.206)	OM 611.961	92	07/1998 → 05/1999		2,0	12	063521092500	**MSN2025**
E 220 T CDI (210.206)	OM 611.961	105	07/1999 → 01/2003		2,0	12	063521092500	**MSN2025**
E 230 T (210.237)	M 111.970	110	06/1996 → 06/1997		1,1	12	063521074030	**MSN2074**
E 250 T D (210.210)	OM 605.912	83	06/1996 → 06/1998		2,0	12	063521092500	**MSN2025**
E 250 T Turbo-D (210.215)	OM 605.962	110	09/1997 → 07/1999		2,0	12	063521092500	**MSN2025**
E 270 T CDI (210.216)	OM 612.961	125	07/1999 → 01/2003		2,0	12	063521092500	**MSN2025**
E 290 T Turbo-D (210.217)	OM 602.982	95	06/1996 → 05/1999		2,0	12	063521092500	**MSN2025**
E 320 T CDI (210.226)	OM 613.961	145	07/1999 → 01/2003		2,0	12	063521092500	**MSN2025**
CLASSE E T-Model (S211)								
E 220 CDI (211.206)	OM 646.961	100	03/2003 → 08/2009		2,0	12	063521092500	**MSN2025**
E 220 T CDI (211.206)	OM 646.961	110	03/2003 → 03/2006		2,0	12	063521092500	**MSN2025**
E 270 T CDI (211.216)	OM 647.961	130	03/2003 → 03/2005		2,0	12	063521092500	**MSN2025**
E 280 T CDI (211.223)	OM 648.961	130	05/2004 → 03/2005		2,0	12	063521092500	**MSN2025**
E 320 T CDI (211.226)	OM 648.961	150	03/2003 → 03/2005		2,0	12	063521092500	**MSN2025**
CLASSE G (W463)								
G 270 CDI (463.322, 463.323)	OM 612.965	115	10/2001 → 08/2006		2,0	12	063521092500	**MSN2025**
CLASSE M (W163)								
ML 230 (163.136)	M 111.977	110	03/1998 → 06/2000		1,1	12	063521074030	**MSN2074**
ML 270 CDI (163.113)	OM 612.963	120	12/1999 → 06/2005		2,0	12	063521092500	**MSN2025**
CLASSE S (W220)								
S 320 CDI (220.025, 220.125)	OM 648.960	150	09/2002 → 08/2005		2,0	12	063521092500	**MSN2025**
S 320 CDI (220.026, 220.126)	OM 613.960	145	08/1999 → 08/2002		2,0	12	063521092500	**MSN2025**
CLASSE V (638/2)								
V 200 (638.214, 638.294)	M 111.948, M 111.950	95	02/1997 → 06/2000		1,1	12	063521074030	**MSN2074**
V 200 CDI (638.294)	OM 611.980	75	06/1999 → 07/2003		2,0	12	063521092500	**MSN2025**
V 220 CDI (638.294)	OM 611.980	90	06/1999 → 07/2003		2,0	12	063521092500	**MSN2025**
V 230 (638.234, 638.294)	M 111.978, M 111.980	105	10/1996 → 06/2000		1,1	12	063521074030	**MSN2074**
V 230 TD (638.274)	OM 601.970	72	09/1996 → 07/2003		2,0	12	063521092500	**MSN2025**

		kW			kW	V	LONG	SHORT
MERCEDES								
CLK (C208)								
200 (208.335)	M 111.941, M 111.945	100	06/1997 → 06/2000		1,1	12	063521074030	**MSN2074**
200 Kompressor (208.345)	M 111.944	141	06/1997 → 06/2000		1,1	12	063521074030	**MSN2074**
230 Kompressor (208.347)	M 111.973, M 111.975	142	06/1997 → 06/2000		1,1	12	063521074030	**MSN2074**
CLK (C209)								
220 CDI (209.308)	OM 646.966	110	04/2005 → 09/2006		2,0	12	063521092500	**MSN2025**
270 CDI (209.316)	OM 612.962, OM 612.967	125	10/2002 → 03/2005		2,0	12	063521092500	**MSN2025**
CLK Cabriolet (A208)								
200 (208.435)	M 111.941, M 111.945	100	06/1998 → 06/2000		1,1	12	063521074030	**MSN2074**
200 Kompressor (208.445)	M 111.944	141	03/1998 → 05/2000		1,1	12	063521074030	**MSN2074**
230 Kompressor (208.447)	M 111.973, M 111.975	142	06/1998 → 05/2000		1,1	12	063521074030	**MSN2074**
COUPE (C124)								
220 CE (124.042)	M 111.960	110	10/1992 → 05/1993		1,1	12	063521074030	**MSN2074**
KOMBI Station wagon (S124)								
200 TE (124.079)	M 111.940	100	10/1992 → 06/1993		1,1	12	063521074030	**MSN2074**
220 TE (124.082)	M 111.960	110	10/1992 → 05/1993		1,1	12	063521074030	**MSN2074**
SLK (R170)								
200 (170.435)	M 111.946	100	09/1996 → 01/2000		1,1	12	063521074030	**MSN2074**
200 Kompressor (170.444)	M 111.958	120	03/2000 → 06/2000		1,1	12	063521074030	**MSN2074**
200 Kompressor (170.445)	M 111.943	141	10/1996 → 01/2000		1,1	12	063521074030	**MSN2074**
230 Kompressor (170.447)	M 111.973	142	09/1996 → 01/2000		1,1	12	063521074030	**MSN2074**
230 Kompressor (170.449)	M 111.983	145	03/2000 → 06/2000		1,1	12	063521074030	**MSN2074**
SPRINTER 2-t Autobus (901, 902)								
208 CDI	OM 611.987	60	04/2000 → 05/2006		2,0	12	063521092500	**MSN2025**
208 D	OM 601.943	58	02/1995 → 04/2000		2,0	12	063521092500	**MSN2025**
210 D	OM 602.980	75	03/1997 → 03/2000		2,0	12	063521092500	**MSN2025**
211 CDI	OM 611.981	80	04/2000 → 05/2006		2,0	12	063521092500	**MSN2025**
212 D	OM 602.980	90	02/1995 → 03/2000		2,0	12	063521092500	**MSN2025**
213 CDI	OM 611.981	95	04/2000 → 05/2006		2,0	12	063521092500	**MSN2025**
214	M 111.979, M 111.984	105	02/1995 → 03/2000		1,1	12	063521074030	**MSN2074**
214 NGT	M 111.984	92	04/2000 → 06/2000		1,1	12	063521074030	**MSN2074**
216 CDI	OM 612.981	115	04/2000 → 05/2006		2,0	12	063521092500	**MSN2025**
SPRINTER 2-t Furgonato (901, 902)								
208 CDI	OM 611.987	60	04/2000 → 05/2006		2,0	12	063521092500	**MSN2025**
208 D	OM 601.943	58	02/1995 → 03/2000		2,0	12	063521092500	**MSN2025**
208 D		60	10/1996 → 03/2000		2,0	12	063521092500	**MSN2025**
210 D	OM 602.980	75	01/1997 → 03/2000		2,0	12	063521092500	**MSN2025**
211 CDI	OM 611.981	80	04/2000 → 05/2006		2,0	12	063521092500	**MSN2025**
212 D	OM 602.980	90	02/1995 → 03/2000		2,0	12	063521092500	**MSN2025**
213 CDI	OM 611.981	95	04/2000 → 05/2006		2,0	12	063521092500	**MSN2025**
214	M 111.979, M 111.984	105	02/1995 → 03/2000		1,1	12	063521074030	**MSN2074**
214 NGT	M 111.984	92	04/2000 → 06/2000		1,1	12	063521074030	**MSN2074**
216 CDI	OM 612.981	115	04/2000 → 05/2006		2,0	12	063521092500	**MSN2025**
SPRINTER 2-t Pianale piatto/Telaio (901, 902)								
208 CDI	OM 611.987	60	04/2000 → 05/2006		2,0	12	063521092500	**MSN2025**

		kW			kW	V	LONG	SHORT
MERCEDES								
SPRINTER 2-t Pianale piatto/Telaio (901, 902)								
208 D	OM 601.943	58	02/1995 → 03/2000		2,0	12	063521092500	**MSN2025**
208 D		60	09/1996 → 03/2000		2,0	12	063521092500	**MSN2025**
210 D	OM 602.980	75	01/1997 → 03/2000		2,0	12	063521092500	**MSN2025**
211 CDI	OM 611.981	80	04/2000 → 05/2006		2,0	12	063521092500	**MSN2025**
212 D	OM 602.980	90	02/1995 → 03/2000		2,0	12	063521092500	**MSN2025**
213 CDI	OM 611.981	95	04/2000 → 05/2006		2,0	12	063521092500	**MSN2025**
214	M 111.979, M 111.984	105	02/1995 → 03/2000		1,1	12	063521074030	**MSN2074**
214 NGT		92	04/2000 → 06/2000		1,1	12	063521074030	**MSN2074**
216 CDI	OM 612.981	115	04/2000 → 05/2006		2,0	12	063521092500	**MSN2025**
SPRINTER 3,5 Pianale piatto/Telaio (906)								
309 CDI	OM 646.984	65	06/2006 → 03/2009		2,0	12	063521092500	**MSN2025**
SPRINTER 3,5-t Furgonato (906)								
309 CDI	OM 646.984	65	06/2006 → 03/2009		2,0	12	063521092500	**MSN2025**
SPRINTER 3-t Autobus (903)								
2.9 TDi	OM 602.980	75	01/1997 → 12/1999		2,0	12	063521092500	**MSN2025**
308 CDI	OM 611.987	60	04/2000 → 05/2006		2,0	12	063521092500	**MSN2025**
308 D	OM 601.943	58	02/1995 → 03/2000		2,0	12	063521092500	**MSN2025**
310 D 4x4	OM 602.980	75	05/1997 → 03/2000		2,0	12	063521092500	**MSN2025**
311 CDI	OM 611.981	80	04/2000 → 05/2006		2,0	12	063521092500	**MSN2025**
311 CDI 4x4	OM 611.981	80	08/2002 → 05/2006		2,0	12	063521092500	**MSN2025**
312 D 2.9	OM 602.980	90	02/1995 → 03/2000		2,0	12	063521092500	**MSN2025**
312 D 2.9 4x4	OM 602.980	90	05/1997 → 03/2000		2,0	12	063521092500	**MSN2025**
313 CDI	OM 611.981	95	04/2000 → 05/2006		2,0	12	063521092500	**MSN2025**
313 CDI 4x4	OM 611.981	95	08/2002 → 05/2006		2,0	12	063521092500	**MSN2025**
314	M 111.979, M 111.984	105	02/1995 → 06/2000		1,1	12	063521074030	**MSN2074**
314 NGT	M 111.984	92	04/2000 → 06/2000		1,1	12	063521074030	**MSN2074**
316 CDI	OM 612.981	115	04/2000 → 05/2006		2,0	12	063521092500	**MSN2025**
316 CDI 4x4	OM 612.981	115	08/2002 → 05/2006		2,0	12	063521092500	**MSN2025**
SPRINTER 3-t Furgonato (903)								
308 CDI	OM 611.987	60	04/2000 → 05/2006		2,0	12	063521092500	**MSN2025**
308 D 2.3	OM 601.943	58	02/1995 → 03/2000		2,0	12	063521092500	**MSN2025**
308 D 2.3		60	02/1995 → 03/2000		2,0	12	063521092500	**MSN2025**
310 D 2.9	OM 602.980	75	01/1997 → 03/2000		2,0	12	063521092500	**MSN2025**
311 CDI	OM 611.981	80	04/2000 → 05/2006		2,0	12	063521092500	**MSN2025**
311 CDI 4x4	OM 611.981	80	08/2002 → 05/2006		2,0	12	063521092500	**MSN2025**
312 D 2.9	OM 602.980	90	02/1995 → 03/2000		2,0	12	063521092500	**MSN2025**
312 D 2.9 4x4	OM 602.980	90	05/1997 → 08/2002		2,0	12	063521092500	**MSN2025**
313 CDI	OM 611.981	95	04/2000 → 05/2006		2,0	12	063521092500	**MSN2025**
313 CDI 4x4	OM 611.981	95	08/2002 → 05/2006		2,0	12	063521092500	**MSN2025**
314	M 111.979, M 111.984	105	02/1995 → 06/2000		1,1	12	063521074030	**MSN2074**
314 NGT		92	04/2000 → 06/2000		1,1	12	063521074030	**MSN2074**
316 CDI	OM 612.981	115	04/2000 → 05/2006		2,0	12	063521092500	**MSN2025**
316 CDI 4x4	OM 612.981	115	08/2002 → 05/2006		2,0	12	063521092500	**MSN2025**
SPRINTER 3-t Furgonato (906)								
209 CDI	OM 646.984	65	06/2006 → 03/2009		2,0	12	063521092500	**MSN2025**

		kW		i	kW	V	LONG	SHORT
MERCEDES								
SPRINTER 3-t Pianale piatto/Telaio (903)								
308 CDI	OM 611.987	60	04/2000 → 05/2006		2,0	12	063521092500	**MSN2025**
308 D 2.3	OM 601.943	58	02/1995 → 03/2000		2,0	12	063521092500	**MSN2025**
308 D 2.3		60	11/1996 → 03/2000		2,0	12	063521092500	**MSN2025**
310 D 2.9	OM 602.980	75	01/1997 → 03/2000		2,0	12	063521092500	**MSN2025**
311 CDI	OM 611.981	80	04/2000 → 05/2006		2,0	12	063521092500	**MSN2025**
311 CDI 4x4	OM 611.981	80	08/2002 → 05/2006		2,0	12	063521092500	**MSN2025**
312 D 2.9	OM 602.980	90	02/1995 → 03/2000		2,0	12	063521092500	**MSN2025**
313 CDI	OM 611.981	95	04/2000 → 05/2006		2,0	12	063521092500	**MSN2025**
313 CDI 4x4	OM 611.981	95	08/2002 → 05/2006		2,0	12	063521092500	**MSN2025**
314	M 111.979, M 111.984	105	02/1995 → 06/2000		1,1	12	063521074030	**MSN2074**
314 NGT		92	04/2000 → 06/2000		1,1	12	063521074030	**MSN2074**
316 CDI	OM 612.981	115	04/2000 → 05/2006		2,0	12	063521092500	**MSN2025**
316 CDI 4x4	OM 612.981	115	08/2002 → 05/2006		2,0	12	063521092500	**MSN2025**
SPRINTER 3-t Pianale piatto/Telaio (906)								
209 CDI	OM 646.984	65	06/2006 → 03/2009		2,0	12	063521092500	**MSN2025**
SPRINTER 4-t Autobus (904)								
408 CDI	OM 611.987	60	04/2000 → 05/2006		2,0	12	063521092500	**MSN2025**
411 CDI	OM 611.981	80	04/2000 → 05/2006		2,0	12	063521092500	**MSN2025**
413 CDI	OM 611.981	95	04/2000 → 05/2006		2,0	12	063521092500	**MSN2025**
414	M 111.979, M 111.984	105	02/1996 → 03/2000		1,1	12	063521074030	**MSN2074**
416 CDI	OM 612.981	115	04/2000 → 05/2006		2,0	12	063521092500	**MSN2025**
SPRINTER 4-t Furgonato (904)								
408 CDI	OM 611.987	60	04/2000 → 05/2006		2,0	12	063521092500	**MSN2025**
408 D	OM 601.943	58	02/1996 → 05/2006		2,0	12	063521092500	**MSN2025**
410 D	OM 602.980	75	02/1996 → 05/2006		2,0	12	063521092500	**MSN2025**
410 D 4x4	OM 602.980	75	05/1997 → 05/2006		2,0	12	063521092500	**MSN2025**
411 CDI	OM 611.981	80	04/2000 → 05/2006		2,0	12	063521092500	**MSN2025**
411 CDI 4x4	OM 611.981	80	04/2000 → 05/2006		2,0	12	063521092500	**MSN2025**
412 D	OM 602.980	85	02/1996 → 05/2006		2,0	12	063521092500	**MSN2025**
412 D	OM 602.980	90	02/1996 → 05/2006		2,0	12	063521092500	**MSN2025**
412 D 4x4	OM 602.980	90	05/1997 → 05/2006		2,0	12	063521092500	**MSN2025**
412 D 4x4	OM 602.980	85	05/1997 → 05/2006		2,0	12	063521092500	**MSN2025**
413 CDI	OM 611.981	95	04/2000 → 05/2006		2,0	12	063521092500	**MSN2025**
413 CDI 4x4	OM 611.981	95	04/2000 → 05/2006		2,0	12	063521092500	**MSN2025**
414	M 111.979, M 111.984	105	02/1996 → 03/2000		1,1	12	063521074030	**MSN2074**
414 4x4	M 111.979, M 111.984	105	05/1997 → 03/2000		1,1	12	063521074030	**MSN2074**
416 CDI	OM 612.981	115	04/2000 → 05/2006		2,0	12	063521092500	**MSN2025**
416 CDI 4x4	OM 612.981	115	04/2000 → 05/2006		2,0	12	063521092500	**MSN2025**
SPRINTER 4-t Pianale piatto/Telaio (904)								
408 CDI	OM 611.987	60	04/2000 → 05/2006		2,0	12	063521092500	**MSN2025**
408 D	OM 601.943	58	02/1996 → 05/2006		2,0	12	063521092500	**MSN2025**
410 D	OM 602.980	75	02/1996 → 05/2006		2,0	12	063521092500	**MSN2025**
410 D 4x4	OM 602.980	75	05/1997 → 05/2006		2,0	12	063521092500	**MSN2025**
411 CDI	OM 611.981	80	04/2000 → 05/2006		2,0	12	063521092500	**MSN2025**

		kW			kW	V	LONG	SHORT
MERCEDES								
SPRINTER 4-t Pianale piatto/Telaio (904)								
411 CDI 4x4	OM 611.981	80	04/2000 → 05/2006		2,0	12	063521092500	**MSN2025**
412 D	OM 602.980	85	02/1996 → 05/2006		2,0	12	063521092500	**MSN2025**
412 D	OM 602.980	90	02/1996 → 05/2006		2,0	12	063521092500	**MSN2025**
412 D 4x4	OM 602.980	85	05/1997 → 05/2006		2,0	12	063521092500	**MSN2025**
412 D 4x4	OM 602.980	90	05/1997 → 05/2006		2,0	12	063521092500	**MSN2025**
413 CDI	OM 611.981	95	04/2000 → 05/2006		2,0	12	063521092500	**MSN2025**
413 CDI 4x4	OM 611.981	95	04/2000 → 05/2006		2,0	12	063521092500	**MSN2025**
414	M 111.979, M 111.984	105	02/1996 → 03/2000		1,1	12	063521074030	**MSN2074**
414 4x4	M 111.979, M 111.984	105	05/1997 → 03/2000		1,1	12	063521074030	**MSN2074**
416 CDI	OM 612.981	115	04/2000 → 05/2006		2,0	12	063521092500	**MSN2025**
416 CDI 4x4	OM 612.981	115	04/2000 → 05/2006		2,0	12	063521092500	**MSN2025**
SPRINTER 5-t Furgonato (906)								
509 CDI	OM 646.984	65	06/2006 → 03/2009		2,0	12	063521092500	**MSN2025**
SPRINTER 5-t Pianale piatto/Telaio (906)								
509 CDI	OM 646.984	65	06/2006 → 03/2009		2,0	12	063521092500	**MSN2025**
SPRINTER Pianale piatto/Telaio								
616 CDI (905.612, 905.613, 905.622, 905.623)	OM 612.981	115	04/2001 → 05/2006		2,0	12	063521092500	**MSN2025**
SPRINTER Ribaltabile								
616 CDI (905.612, 905.622, 905.623)	OM 612.981	115	04/2001 → 05/2006		2,0	12	063521092500	**MSN2025**
T2/L Cassone / Furgonato / Promiscuo								
L 408 DG (309.311, 309.312, 309.313, 309.314, 309.315, 309.3..)	OM 314.948	63	02/1974 → 12/1974		4,0	24	063523683090	**MSN2059**
L 508 DG (309.411, 309.412, 309.413, 309.414, 309.415, 309.4..)	OM 314.946, OM 314.948	60	01/1970 → 12/1988		4,0	24	063523683090	**MSN2059**
L 508 DG (309.411, 309.412, 309.413, 309.414, 309.415, 309.4..)	OM 314.946, OM 314.948	63	01/1970 → 12/1988		4,0	24	063523683090	**MSN2059**
L 613 D (310.510, 313.424, 313.427, 313.429)	OM 353.963, OM 353.966	96	04/1977 → 12/1988		3,0	12	063523673030	**MSN2054**
T2/L Pianale piatto/Telaio								
L 408 DG (309.300, 309.301, 309.302, 309.303)	OM 314.948	63	02/1974 → 12/1974		4,0	24	063523683090	**MSN2059**
L 508 DG (309.400, 309.401, 309.402, 309.403, 309.404, 309.4..)	OM 314.946, OM 314.948	60	01/1970 → 12/1988		4,0	24	063523683090	**MSN2059**
L 508 DG (309.400, 309.401, 309.402, 309.403, 309.404, 309.4..)	OM 314.946, OM 314.948	63	01/1970 → 12/1988		4,0	24	063523683090	**MSN2059**
L 613 D (313.402, 313.404)	OM 353.963, OM 353.966	96	04/1977 → 12/1988		3,0	12	063523673030	**MSN2054**

		kW		i	kW	V	LONG	SHORT
MERCEDES								
T2/L Ribaltabile								
LKO 508 DG (309.440, 309.441, 309.442, 309.444, 309.445)	OM 314.946, OM 314.948, OM 314.959, OM 314.961, OM 314.962, OM 314.963	63	09/1972 → 06/1988		4,0	24	063523683090	**MSN2059**
LKO 508 DG (309.440, 309.441, 309.442, 309.444, 309.445)	OM 314.946, OM 314.948, OM 314.959, OM 314.961, OM 314.962, OM 314.963	63	09/1972 → 06/1988		4,0	24	063523683090	**MSN2059**
T2/L Veicolo municipale								
LKO 508 DG (309.430, 309.431, 309.432, 309.433, 309.435)		0	02/1974 →		4,0	24	063523683090	**MSN2059**
T2/LN1 Cabina con motore								
809 DT (670.199)		0	02/1992 → 12/1994		4,0	24	063522310030	**MSN2042**
809 DT (670.199)		0	02/1992 → 12/1994		4,0	24	063522310030	**MSN2042**
809 DT (670.199)		0	→		4,0	24	063523683090	**MSN2059**
T2/LN1 Cassone / Furgonato / Promiscuo								
609 D (668.061, 668.062, 668.063)	OM 354.902	77	06/1994 → 12/1994		4,0	24	063522310030	**MSN2042**
609 D (668.061, 668.062, 668.063)	OM 364.906	66	04/1986 → 12/1994		4,0	24	063522310030	**MSN2042**
609 D (668.061, 668.062, 668.063)	OM 364.919	63	04/1986 → 12/1994		4,0	24	063522310030	**MSN2042**
611 D (668.061, 668.062, 668.063)	OM 354.901	77	06/1994 → 12/1994		4,0	24	063522310030	**MSN2042**
709 D (669.061, 669.062, 669.063)	OM 364.906, OM 364.912	66	04/1986 → 12/1994	325961 →	4,0	24	063522310030	**MSN2042**
709 D (669.061, 669.062, 669.063)	OM 364.906, OM 364.912	66	04/1986 → 12/1994	325961 →	4,0	24	063522310030	**MSN2042**
709 D (669.061, 669.062, 669.063)	OM 364.906, OM 364.912	66	04/1986 → 12/1994	→325960	4,0	24	063523683090	**MSN2059**
709 D (669.061, 669.062, 669.063)	OM 364.906, OM 364.912	66	04/1986 → 12/1994	→325960	4,0	24	063523683090	**MSN2059**
709 D (669.061, 669.062, 669.063)	OM 364.921	63	02/1992 → 12/1994	325961 →	4,0	24	063522310030	**MSN2042**
709 D (669.061, 669.062, 669.063)	OM 364.921	63	04/1986 → 12/1994	325961 →	4,0	24	063522310030	**MSN2042**
709 D (669.061, 669.062, 669.063)	OM 364.921	63	02/1992 → 12/1994	→325960	4,0	24	063523683090	**MSN2059**
709 D (669.061, 669.062, 669.063)	OM 364.921	63	04/1986 → 12/1994	→325960	4,0	24	063523683090	**MSN2059**
711 D (669.361, 669.362, 669.363)	OM 354.902, OM 354.903, OM 364.957	77	04/1986 → 12/1994		4,0	24	063522310030	**MSN2042**
711 D (669.361, 669.362, 669.363)	OM 354.902, OM 354.903, OM 364.957	77	06/1994 → 12/1994		4,0	24	063523683090	**MSN2059**
711 D (669.361, 669.362, 669.363)	OM 364.950, OM 364.952	85	04/1986 → 12/1994	325961 →	4,0	24	063522310030	**MSN2042**
711 D (669.361, 669.362, 669.363)	OM 364.950, OM 364.952	85	04/1986 → 12/1994	→325960	4,0	24	063523683090	**MSN2059**

		kW			kW	V	LONG	SHORT
MERCEDES								
T2/LN1 Cassone / Furgonato / Promiscuo								
714 D (669.361, 669.362, 669.363)	OM 354.923	103	06/1994 → 12/1994		4,0	24	063523683090	**MSN2059**
809 D (670.061, 670.062, 670.063)	OM 364.906, OM 364.911	66	02/1992 → 12/1994		4,0	24	063522310030	**MSN2042**
809 D (670.061, 670.062, 670.063)	OM 364.906, OM 364.911	66	04/1986 → 12/1994		4,0	24	063523683090	**MSN2059**
809 D (670.061, 670.062, 670.063)	OM 364.920, OM 364.921	63	02/1992 → 12/1994		4,0	24	063522310030	**MSN2042**
809 D (670.061, 670.062, 670.063)	OM 364.920, OM 364.921	63	04/1986 → 12/1994		4,0	24	063523683090	**MSN2059**
811 D (670.362, 670.363)	OM 354.901, OM 354.903, OM 364.958	77	06/1994 → 12/1994		4,0	24	063522310030	**MSN2042**
811 D (670.362, 670.363)	OM 354.901, OM 354.903, OM 364.958	77	04/1986 → 12/1994		4,0	24	063523683090	**MSN2059**
811 D (670.362, 670.363)	OM 364.950, OM 364.952	85	06/1994 → 12/1994		4,0	24	063522310030	**MSN2042**
811 D (670.362, 670.363)	OM 364.950, OM 364.952	85	04/1986 → 12/1994		4,0	24	063523683090	**MSN2059**
814 D (670.364, 670.365, 670.366)	OM 354.924	103	06/1994 → 12/1994		4,0	24	063522310030	**MSN2042**
814 D (670.364, 670.365, 670.366)	OM 364.981, OM 364.986	100	11/1987 → 12/1994	325961 →	4,0	24	063522310030	**MSN2042**
814 D (670.364, 670.365, 670.366)	OM 364.981, OM 364.986	100	11/1987 → 12/1994	→325960	4,0	24	063523683090	**MSN2059**
814 DA 4x4 (670.464, 670.465)	OM 354.925	103	06/1994 → 12/1994		4,0	24	063522310030	**MSN2042**
814 DA 4x4 (670.464, 670.465)	OM 364.984, OM 364.987	100	01/1991 → 12/1994		4,0	24	063522310030	**MSN2042**
T2/LN1 Pianale piatto/Telaio								
609 D (668.001, 668.002, 668.003)	OM 354.902	77	06/1994 → 12/1994		4,0	24	063522310030	**MSN2042**
609 D (668.001, 668.002, 668.003)	OM 364.906	66	04/1986 → 12/1994		4,0	24	063522310030	**MSN2042**
609 D (668.001, 668.002, 668.003)	OM 364.919	63	04/1986 → 12/1994		4,0	24	063522310030	**MSN2042**
611 D (668.001, 668.002, 668.003)	OM 354.902	77	06/1994 → 12/1994		4,0	24	063522310030	**MSN2042**
709 D (669.000, 669.001, 669.002, 669.003, 669.041)	OM 364.906, OM 364.912	66	04/1986 → 12/1994	325961 →	4,0	24	063522310030	**MSN2042**
709 D (669.000, 669.001, 669.002, 669.003, 669.041)	OM 364.906, OM 364.912	66	04/1986 → 12/1994	325961 →	4,0	24	063522310030	**MSN2042**
709 D (669.000, 669.001, 669.002, 669.003, 669.041)	OM 364.906, OM 364.912	66	04/1986 → 12/1994	→325960	4,0	24	063523683090	**MSN2059**
709 D (669.000, 669.001, 669.002, 669.003, 669.041)	OM 364.906, OM 364.912	66	04/1986 → 12/1994	→325960	4,0	24	063523683090	**MSN2059**
709 D (669.000, 669.001, 669.002, 669.003, 669.041)	OM 364.921	63	02/1992 → 12/1994	325961 →	4,0	24	063522310030	**MSN2042**
709 D (669.000, 669.001, 669.002, 669.003, 669.041)	OM 364.921	63	04/1986 → 12/1994	325961 →	4,0	24	063522310030	**MSN2042**

		kW		i	kW	V	LONG	SHORT
MERCEDES								
T2/LN1 Pianale piatto/Telaio								
709 D (669.000, 669.001, 669.002, 669.003, 669.041)	OM 364.921	63	02/1992 → 12/1994	→325960	4,0	24	063523683090	**MSN2059**
709 D (669.000, 669.001, 669.002, 669.003, 669.041)	OM 364.921	63	04/1986 → 12/1994	→325960	4,0	24	063523683090	**MSN2059**
711 D (669.301, 669.302, 669.303)	OM 354.902, OM 354.903, OM 364.957	77	04/1986 → 12/1994		4,0	24	063522310030	**MSN2042**
711 D (669.301, 669.302, 669.303)	OM 364.950, OM 364.952	85	04/1986 → 12/1994	325961 →	4,0	24	063522310030	**MSN2042**
711 D (669.301, 669.302, 669.303)	OM 364.950, OM 364.952	85	04/1986 → 12/1994	→325960	4,0	24	063523683090	**MSN2059**
714 D (669.301, 669.302, 669.303)	OM 354.923	103	06/1994 → 12/1994		4,0	24	063523683090	**MSN2059**
809 D (670.001, 670.002, 670.003)	OM 364.906, OM 364.911	66	02/1992 → 12/1994		4,0	24	063522310030	**MSN2042**
809 D (670.001, 670.002, 670.003)	OM 364.906, OM 364.911	66	04/1986 → 12/1994		4,0	24	063523683090	**MSN2059**
809 D (670.001, 670.002, 670.003)	OM 364.920, OM 364.921	63	02/1992 → 12/1994		4,0	24	063522310030	**MSN2042**
809 D (670.001, 670.002, 670.003)	OM 364.920, OM 364.921	63	04/1986 → 12/1994		4,0	24	063523683090	**MSN2059**
811 D (670.302, 670.303)	OM 354.901, OM 354.903, OM 364.958	77	04/1986 → 12/1994	325961 →	4,0	24	063522310030	**MSN2042**
811 D (670.302, 670.303)	OM 354.901, OM 354.903, OM 364.958	77	04/1986 → 12/1994	→325960	4,0	24	063523683090	**MSN2059**
811 D (670.302, 670.303)	OM 364.950, OM 364.952	85	04/1986 → 12/1994	325961 →	4,0	24	063522310030	**MSN2042**
811 D (670.302, 670.303)	OM 364.950, OM 364.952	85	04/1986 → 12/1994	→325960	4,0	24	063523683090	**MSN2059**
814 D (670.312, 670.313)	OM 354.924	103	06/1994 → 12/1994		4,0	24	063522310030	**MSN2042**
814 D (670.312, 670.313)	OM 364.981, OM 364.986	100	11/1987 → 12/1994		4,0	24	063522310030	**MSN2042**
814 DA 4x4 (670.411, 670.412)	OM 354.925	103	06/1994 → 12/1994		4,0	24	063522310030	**MSN2042**
814 DA 4x4 (670.411, 670.412)	OM 364.984, OM 364.987	100	01/1991 → 12/1994		4,0	24	063522310030	**MSN2042**
T2/LN1 Ribaltabile								
609 DK (668.041, 668.042)	OM 364.906	66	04/1986 → 12/1994		4,0	24	063522310030	**MSN2042**
609 DK (668.041, 668.042)	OM 364.919	63	04/1986 → 12/1994		4,0	24	063522310030	**MSN2042**
611 DK (668.041, 668.042)	OM 354.901	77	06/1994 → 12/1994		4,0	24	063522310030	**MSN2042**
709 DK (669.041, 669.042)	OM 364.906	66	04/1986 → 12/1994	325961 →	4,0	24	063522310030	**MSN2042**
709 DK (669.041, 669.042)	OM 364.906	66	04/1986 → 12/1994	→325960	4,0	24	063523683090	**MSN2059**
709 DK (669.041, 669.042)	OM 364.921	63	04/1986 → 12/1994	325961 →	4,0	24	063522310030	**MSN2042**

		kW			kW	V	LONG	SHORT
MERCEDES								
T2/LN1 Ribaltabile								
709 DK (669.041, 669.042)	OM 364.921	63	04/1986 → 12/1994	→325960	4,0	24	063523683090	**MSN2059**
809 DK (670.041, 670.042)	OM 364.906, OM 364.911	66	02/1992 → 12/1994		4,0	24	063522310030	**MSN2042**
809 DK (670.041, 670.042)	OM 364.906, OM 364.911	66	04/1986 → 12/1994		4,0	24	063523683090	**MSN2059**
809 DK (670.041, 670.042)	OM 364.920, OM 364.921	63	02/1992 → 12/1994		4,0	24	063522310030	**MSN2042**
809 DK (670.041, 670.042)	OM 364.920, OM 364.921	63	04/1986 → 12/1994		4,0	24	063523683090	**MSN2059**
811 DK (670.341, 670.342)	OM 354.901, OM 354.903, OM 364.958	77	06/1994 → 12/1994		4,0	24	063522310030	**MSN2042**
811 DK (670.341, 670.342)	OM 354.901, OM 354.903, OM 364.958	77	04/1986 → 12/1994		4,0	24	063523683090	**MSN2059**
811 DK (670.341, 670.342)	OM 364.950, OM 364.952	85	04/1986 → 12/1994	325961 →	4,0	24	063522310030	**MSN2042**
811 DK (670.341, 670.342)	OM 364.950, OM 364.952	85	04/1986 → 12/1994	→325960	4,0	24	063523683090	**MSN2059**
Tre volumi (W124)								
200 E (124.019)	M 111.940	100	10/1992 → 06/1993		1,1	12	063521074030	**MSN2074**
220 E (124.022)	M 111.960	110	10/1992 → 06/1993		1,1	12	063521074030	**MSN2074**
VANEO (414)								
1.7 CDI (414.700)	OM 668.914	67	02/2002 → 08/2005		1,6	12	063521082170	**MSN2081**
1.7 CDI (414.700)	OM 668.914	55	02/2002 → 08/2005		1,6	12	063521082170	**MSN2081**
VARIO Autobus								
O 810 (670.373, 670.374)	OM 904.904	75	09/1996 → 01/2001		4,0	24	063522310330	**MSN2049**
O 812 (670.373, 670.674)	OM 602.984, OM 602.985	90	09/1996 → 01/2001		2,0	12	063521092500	**MSN2025**
O 814 (670.373, 670.374)	OM 904.908	100	09/1996 → 01/2001		4,0	24	063522310330	**MSN2049**
O 815 (670.373, 670.374)	OM 904.923	112	09/1996 → 01/2001		4,0	24	063522310330	**MSN2049**
VARIO Cabina con motore								
810 DT (670.398)		0	→ 09/2006		4,0	24	063522310330	**MSN2049**
812 DT (670.398)		0	→ 01/2001		4,0	24	063522310330	**MSN2049**
812 DT (670.398)		0	→ 01/2001		4,0	24	063522310330	**MSN2049**
VARIO Cassone / Furgonato / Promiscuo								
512 D (667.351, 667.352, 667.353)	OM 602.984	90	09/1996 → 01/2001		2,0	12	063521092500	**MSN2025**
612 D (668.351, 668.352, 668.353)	OM 602.984, OM 602.985	90	09/1996 → 01/2001		2,0	12	063521092500	**MSN2025**
613 D, 614 D (668.351, 668.352, 668.353)	OM 904.908	100	09/1996 → 01/2001		4,0	24	063522310330	**MSN2049**
613 D, 614 D (668.351, 668.352, 668.353)	OM 904.908	95	09/2006		4,0	24	063522310330	**MSN2049**
615 D, 616 D (668.351, 668.352, 668.353)	OM 904.923	115	10/1998 → 09/2006		4,0	24	063522310330	**MSN2049**
615 D, 616 D (668.351, 668.352, 668.353)	OM 904.923	112	10/1998 → 01/2001		4,0	24	063522310330	**MSN2049**
618 D	OM 904.964	130	09/2006 → 03/2009		4,0	24	063522310330	**MSN2049**
812 D (670.351, 670.352, 670.353)	OM 602.984, OM 602.985	90	09/1996 → 09/2006		2,0	12	063521092500	**MSN2025**

		kW			kW	V	LONG	SHORT
MERCEDES								
VARIO Cassone / Furgonato / Promiscuo								
813 D, 814 D (670.351, 670.352, 670.353)	OM 904.908	95	09/2006 →		4,0	24	063522310330	**MSN2049**
813 D, 814 D (670.351, 670.352, 670.353)	OM 904.908	100	09/1996 → 01/2001		4,0	24	063522310330	**MSN2049**
813 DA, 814 DA 4x4 (669.599, 670.451, 670.452, 670.453)	OM 904.908	100	09/1996 → 01/2001		4,0	24	063522310330	**MSN2049**
813 DA, 814 DA 4x4 (669.599, 670.451, 670.452, 670.453)	OM 904.908	95	09/1996 → 01/2001		4,0	24	063522310330	**MSN2049**
815 D, 816 D (670.351, 670.352, 670.353)	OM 904.923	115	09/1996 → 01/2001		4,0	24	063522310330	**MSN2049**
815 D, 816 D (670.351, 670.352, 670.353)	OM 904.923	112	09/2006 →		4,0	24	063522310330	**MSN2049**
815 DA, 816 DA 4x4 (669.599, 670.451, 670.452, 670.453)	OM 904.923	115	09/1996 → 01/2001		4,0	24	063522310330	**MSN2049**
815 DA, 816 DA 4x4 (669.599, 670.451, 670.452, 670.453)	OM 904.923	112	09/2006 →		4,0	24	063522310330	**MSN2049**
818 D	OM 904.964	130	09/2006 → 03/2009		4,0	24	063522310330	**MSN2049**
VARIO Pianale piatto/Telaio								
512 D (667.321, 667.322, 667.323)	OM 602.984	90	09/1996 → 01/2001		2,0	12	063521092500	**MSN2025**
612 D (668.321, 668.322, 668.323)	OM 602.984, OM 602.985	90	09/1996 → 01/2001		2,0	12	063521092500	**MSN2025**
613 D, 614 D (668.321, 668.322, 668.323)	OM 904.908	95	09/2006 →		4,0	24	063522310330	**MSN2049**
613 D, 614 D (668.321, 668.322, 668.323)	OM 904.908	100	09/1996 → 01/2001		4,0	24	063522310330	**MSN2049**
615 D, 616 D (668.321, 668.322, 668.323)	OM 904.923	115	10/1998 → 01/2001		4,0	24	063522310330	**MSN2049**
615 D, 616 D (668.321, 668.322, 668.323)	OM 904.923	112	10/1998 → 09/2006		4,0	24	063522310330	**MSN2049**
618 D	OM 904.964	130	09/2006 → 03/2009		4,0	24	063522310330	**MSN2049**
812 D (670.321, 670.322, 670.323, 670.324)	OM 602.984, OM 602.985	90	09/1996 → 09/2006		2,0	12	063521092500	**MSN2025**
813 D, 814 D (670.321, 670.322, 670.323, 670.324)	OM 904.908	100	09/1996 → 01/2001		4,0	24	063522310330	**MSN2049**
813 D, 814 D (670.321, 670.322, 670.323, 670.324)	OM 904.908	95	09/2006 →		4,0	24	063522310330	**MSN2049**
813 DA, 814 DA 4x4 (670.421, 670.422, 670.423)	OM 904.908	95	09/1996 → 01/2001		4,0	24	063522310330	**MSN2049**

		kW		i	kW	V	LONG	SHORT
MERCEDES								
VARIO Pianale piatto/Telaio								
813 DA, 814 DA 4x4 (670.421, 670.422, 670.423)	OM 904.908	100	09/1996 → 01/2001		4,0	24	063522310330	**MSN2049**
815 D, 816 D (670.321, 670.322, 670.323, 670.324)	OM 904.923	115	09/1996 → 01/2001		4,0	24	063522310330	**MSN2049**
815 D, 816 D (670.321, 670.322, 670.323, 670.324)	OM 904.923	112	09/2006 →		4,0	24	063522310330	**MSN2049**
815 DA, 816 DA 4x4 (670.421, 670.422, 670.423)	OM 904.923	115	09/1996 → 01/2001		4,0	24	063522310330	**MSN2049**
815 DA, 816 DA 4x4 (670.421, 670.422, 670.423)	OM 904.923	112	09/2006 →		4,0	24	063522310330	**MSN2049**
818 D	OM 904.964	130	09/2006 → 03/2009		4,0	24	063522310330	**MSN2049**
818 DA 4x4	OM 904.964	130	09/2006 → 03/2009		4,0	24	063522310330	**MSN2049**
VARIO Ribaltabile								
612 D (668.331, 668.332)	OM 602.984, OM 602.985	90	09/1996 → 01/2001		2,0	12	063521092500	**MSN2025**
613 D, 614 D (668.331, 668.332)	OM 904.908	95	09/2006 →		4,0	24	063522310330	**MSN2049**
613 D, 614 D (668.331, 668.332)	OM 904.908	100	09/1996 → 01/2001		4,0	24	063522310330	**MSN2049**
615 D, 616 D (668.331, 668.332)	OM 904.923	112	10/1998 → 09/2006		4,0	24	063522310330	**MSN2049**
615 D, 616 D (668.331, 668.332)	OM 904.923	115	10/1998 → 01/2001		4,0	24	063522310330	**MSN2049**
618 D	OM 904.964	130	09/2006 → 03/2009		4,0	24	063522310330	**MSN2049**
812 D (670.331, 670.332)	OM 602.984, OM 602.985	90	09/1996 → 09/2006		2,0	12	063521092500	**MSN2025**
813 D, 814 D (670.331, 670.332)	OM 904.908	95	09/2006 →		4,0	24	063522310330	**MSN2049**
813 D, 814 D (670.331, 670.332)	OM 904.908	100	09/1996 → 01/2001		4,0	24	063522310330	**MSN2049**
813 DA, 814 DA 4x4 (670.431, 670.432)	OM 904.908	95	09/1996 → 01/2001		4,0	24	063522310330	**MSN2049**
813 DA, 814 DA 4x4 (670.431, 670.432)	OM 904.908	100	09/1996 → 01/2001		4,0	24	063522310330	**MSN2049**
815 D, 816 D (670.331, 670.332)	OM 904.923	112	09/2006 →		4,0	24	063522310330	**MSN2049**
815 D, 816 D (670.331, 670.332)	OM 904.923	115	09/1996 → 01/2001		4,0	24	063522310330	**MSN2049**
815 DA, 816 DA 4x4 (670.431, 670.432)	OM 904.923	112	09/2006 →		4,0	24	063522310330	**MSN2049**
815 DA, 816 DA 4x4 (670.431, 670.432)	OM 904.923	115	09/1996 → 01/2001		4,0	24	063522310330	**MSN2049**
818 D	OM 904.964	130	09/2006 → 03/2009		4,0	24	063522310330	**MSN2049**
818 DA 4x4	OM 904.964	130	09/2006 → 03/2009		4,0	24	063522310330	**MSN2049**
VIANO (W639)								
2,0 CDI 4-matic	OM 646.982	80	07/2005 → 10/2006		2,0	12	063521092500	**MSN2025**

		kW		i	kW	V	LONG	SHORT
MERCEDES								
VIANO (W639)								
CDI 2.0	OM 646.982	80	09/2003 → 10/2006		2,0	12	063521092500	**MSN2025**
CDI 2.0	OM 646.982	85	11/2006 → 08/2010		2,0	12	063521092500	**MSN2025**
CDI 2.2	OM 646.982	110	09/2003 → 08/2010		2,0	12	063521092500	**MSN2025**
CDI 2.2 4-matic	OM 646.982	110	07/2005 → 08/2010		2,0	12	063521092500	**MSN2025**
VITO / MIXTO Furgonato (W639)								
109 CDi	OM 646.981	70	11/2006 →		2,0	12	063521092500	**MSN2025**
109 CDI	OM 646.983	65	10/2003 → 10/2006		2,0	12	063521092500	**MSN2025**
111 CDI	OM 646.982	85	09/2007 →		2,0	12	063521092500	**MSN2025**
111 CDI	OM 646.982	80	10/2003 → 10/2006		2,0	12	063521092500	**MSN2025**
111 CDI 4x4	OM 646.982	80	09/2007 →		2,0	12	063521092500	**MSN2025**
115 CDI	OM 646.982	110	10/2003 →		2,0	12	063521092500	**MSN2025**
115 CDI 4x4	OM 646.982	110	09/2007 →		2,0	12	063521092500	**MSN2025**
VITO Autobus (638)								
108 CDI 2.2 (638.194)	OM 611A (60 KW CDI)	60	04/1999 → 07/2003		2,0	12	063521092500	**MSN2025**
108 D 2.3 (638.164)	OM 601.942	58	02/1996 → 07/2003		2,0	12	063521092500	**MSN2025**
110 CDI 2.2 (638.194)	OM 611LA (75 KW CDI)	75	04/1999 → 07/2003		2,0	12	063521092500	**MSN2025**
110 TD 2.3 (638.174)	OM 601.970	72	02/1996 → 07/2003		2,0	12	063521092500	**MSN2025**
112 CDI 2.2 (638.194)	OM 611.980	90	04/1999 → 07/2003		2,0	12	063521092500	**MSN2025**
113 2.0 (638.114, 638.194)	M 111.948, M 111.950	95	02/1996 → 06/2000		1,1	12	063521074030	**MSN2074**
114 2.3 (638.134, 638.194)	M 111.978, M 111.980	105	12/1996 → 06/2000		1,1	12	063521074030	**MSN2074**
VITO Autobus (W639)								
109 CDI	OM 646.980	70	11/2006 →		2,0	12	063521092500	**MSN2025**
109 CDI	OM 646.983	65	10/2003 → 10/2006		2,0	12	063521092500	**MSN2025**
109 CDI 4x4	OM 646.981	70	09/2007 →		2,0	12	063521092500	**MSN2025**
111 CDI	OM 646.982	80	10/2003 → 10/2006		2,0	12	063521092500	**MSN2025**
111 CDI	OM 646.982	85	09/2007 →		2,0	12	063521092500	**MSN2025**
111 CDI 4x4	OM 646.982	80	09/2007 →		2,0	12	063521092500	**MSN2025**
115 CDI	OM 646.982	110	10/2003 → 07/2010		2,0	12	063521092500	**MSN2025**
115 CDI 4x4	OM 646.982	110	09/2007 →		2,0	12	063521092500	**MSN2025**
VITO Furgonato (638)								
108 CDI 2.2 (638.094)	OM 611A (60 KW CDI)	60	04/1999 → 07/2003		2,0	12	063521092500	**MSN2025**
108 D 2.3 (638.064)	OM 601.942	58	03/1997 → 07/2003		2,0	12	063521092500	**MSN2025**
110 CDI 2.2 (638.094)	OM 611LA (75 KW CDI)	75	04/1999 → 07/2003		2,0	12	063521092500	**MSN2025**
110 D 2.3 (638.074)	OM 601.970	72	03/1997 → 07/2003		2,0	12	063521092500	**MSN2025**
112 CDI 2.2 (638.094)	OM 611.980	90	04/1999 → 07/2003		2,0	12	063521092500	**MSN2025**
113 2.0 (638.014, 638.094)	M 111.948, M 111.950	95	03/1997 → 06/2000		1,1	12	063521074030	**MSN2074**
114 2.3 (638.034, 638.094)	M 111.978, M 111.980	105	03/1997 → 06/2000		1,1	12	063521074030	**MSN2074**
MITSUBISHI								
COLT III (C5_A)								
1.8 Diesel GLX (C54A)	4 D 65	44	04/1988 → 05/1992		2,0	12	063522613010	**MSN2613**
ECLIPSE I (D2_A)								
2.0 i 16V (D22A, D27A)	4 G 63 (DOHC 16V)	110	04/1991 → 11/1995		1,2	12	063522617010	**MSN2617**
ECLIPSE II (D3_)								
2000 GS 16V (D32A)	4 G 63 (DOHC 16V)	107	12/1995 → 04/1999		1,2	12	063522617010	**MSN2617**

		kW		i	kW	V	LONG	SHORT
MITSUBISHI								
ECLIPSE II (D3_)								
2000 GT 16V		157	12/1995 → 04/1999		1,2	12	063522617010	**MSN2617**
GALANT II (A16_)								
2.3 Turbo-D (A167)	4 D 55 T	62	09/1980 → 05/1984		2,0	12	063522613010	**MSN2613**
GALANT II Station Wagon (A16_V)								
2.3 Turbo-D (A167V)	4 D 55 T	62	07/1983 → 05/1984		2,0	12	063522613010	**MSN2613**
GALANT IV (E3_A)								
1.8 Turbo-D (E34A)	4 D 65 T	55	11/1988 → 10/1992		2,0	12	063522613010	**MSN2613**
2.0 (E39A, E38A, E33A)	4G63 (SOHC 8V)	80	04/1989 → 10/1992		1,2	12	063522617010	**MSN2617**
2.0 GTI 16V (E39A, E38A, E33A)	4 G 63 (DOHC 16V)	106	11/1988 → 10/1992		1,2	12	063522617010	**MSN2617**
GALANT IV Tre volumi (E3_A)								
1.8 Turbo-D (E34A)	4 D 65 T	55	12/1987 → 10/1992		2,0	12	063522613010	**MSN2613**
2.0 4x4 (E39A, E38A, E33A)	4G63 (SOHC 8V)	80	12/1988 → 10/1992		1,2	12	063522617010	**MSN2617**
2.0 GTI 16V 4x4 (E38A, E39A, E33A) Cat.	4 G 63 (DOHC 16V)	110	09/1991 → 10/1992		1,2	12	063522617010	**MSN2617**
GALANT V (E5_A, E7_A, E8_A)								
2.0 GLSTD (E57A)	4 D 68 T	66	11/1992 → 08/1996		2,0	12	063522613010	**MSN2613**
GALANT V Tre volumi (E5_A, E7_A, E8_A)								
2.0 GLSI (E75A, E55A)	4G63 (SOHC 8V)	101	11/1992 → 08/1996		1,2	12	063522617010	**MSN2617**
GALANT VI (EA_)								
2.0 TDI (EA6A)	4D68 SOHC	66	09/1996 → 10/2004		2,0	12	063522613010	**MSN2613**
GALANT VI Station wagon (EA_)								
2.0 TDI (EA6W)	4D68 SOHC	66	09/1996 → 10/2003		2,0	12	063522613010	**MSN2613**
L 200 (K__T)								
2.5 D (K14T)	4 D 56	51	11/1986 → 08/1996		2,0	12	063522613010	**MSN2613**
2.5 D 4WD (K24T)	4 D 56	51	12/1987 → 05/1993		2,0	12	063522613010	**MSN2613**
2.5 TD 4WD (K34T)	4 D 56 T	64	11/1992 → 08/1996		2,0	12	063522613010	**MSN2613**
2.6 4WD (K33T)	G54B	76	11/1989 → 05/1995		1,2	12	063522617010	**MSN2617**
L 300 Autobus (LO3_P/G, L0_2P)								
2.0 4x4 (L037G)	4G63 (SOHC 8V)	65	11/1986 → 02/1987		1,2	12	063522617010	**MSN2617**
2.3 D (L038P)	4 D 55	50	04/1983 → 10/1986		2,0	12	063522613010	**MSN2613**
L 300 Autobus (P0_W, P1_W, P2_W)								
2.0 (P13V, P03W, P13T)	G63B	64	11/1986 →		1,2	12	063522617010	**MSN2617**
2.0 4WD (P13V, P23W, P03V, P13T)	4G63 (SOHC 8V)	66	11/1986 →		1,2	12	063522617010	**MSN2617**
2.5 D (P25V, P05W, P05V, P15V, P15T)	4 D 56	51	11/1986 →		2,0	12	063522613010	**MSN2613**
L 300 Furgonato (L03_P)								
2.3 D (L038P, L068P)	4 D 55	50	09/1983 → 10/1986		2,0	12	063522613010	**MSN2613**
L 300 Furgonato (P0_W, P1_W)								
2.5 D (P05V, P05W, P15V)	4 D 56	51	11/1986 →		2,0	12	063522613010	**MSN2613**
LANCER IV (C6_A, C7_A)								
1.8 GTi 16V (C69A)	4G93	103	06/1992 → 12/1993		1,2	12	063522617010	**MSN2617**

		kW			kW	V	LONG	SHORT
MITSUBISHI								
LANCER V (CB/D_A)								
2.0 Diesel (CB8A)	4 D 68	50	06/1992		2,0	12	063522613010	**MSN2613**
LANCER V Station Wagon (CB_W, CD_W)								
2.0 D (CB8W)	4 D 68	50	12/1992 → 10/2003		2,0	12	063522613010	**MSN2613**
PAJERO I Fuoristrada aperto (L04_G)								
2.3 TD (L043G, L048G)	4 D 55 T	62	12/1982 → 04/1986		2,0	12	063522613010	**MSN2613**
2.5 TD (L044G, L049G)	4 D 56 T	62	05/1986 → 10/1989		2,0	12	063522613010	**MSN2613**
SAPPORO III (E16A)								
2.4 (E16A)	4G64 (8V)	91	06/1987 → 08/1990		1,2	12	063522617010	**MSN2617**
SPACE RUNNER (N1_W, N2_W)								
2.0 TD (N18W)	4 D 68 T	60	10/1992 → 08/1999		2,0	12	063522613010	**MSN2613**
SPACE WAGON (D0_V/W)								
1.8 TD (D09V, D09W)	4 D 65 T	55	06/1986 → 04/1991		2,0	12	063522613010	**MSN2613**
2.0 4x4 (D08W)	4G63 (SOHC 8V)	75	03/1985 → 04/1991		1,2	12	063522617010	**MSN2617**
2.0 GLX (D04W)	G63B	62	06/1986 → 05/1988		1,2	12	063522617010	**MSN2617**
2.0 GLX 4x4 (D08W)	G63B	62	06/1986 → 05/1988		1,2	12	063522617010	**MSN2617**
2.0 GLXi (D04W)	4G63 (SOHC 8V)	74	06/1988 → 04/1991		1,2	12	063522617010	**MSN2617**
2.0 GLXi 4x4 (D08W)	4G63 (SOHC 8V)	74	06/1988 → 04/1991		1,2	12	063522617010	**MSN2617**
SPACE WAGON (N3_W, N4_W)								
1.8 TD (N35W)	4 D 65 T	55	10/1991 → 10/1998		2,0	12	063522613010	**MSN2613**
2.0 TD (N38W)	4D68 T	60	10/1992 → 10/1998		2,0	12	063522613010	**MSN2613**
NISSAN								
TRADE Furgonato								
2.0 D	LD20	44	01/1988 → 11/1989		2,4	12	063523621000	**MSN2052**
TRADE Pianale piatto/Telaio								
2.8 D	A428II	59	12/1986 → 12/1987		2,3	12	063522188120	**MSN2033**
OPEL								
AGILA (H00)								
1.2 16V	Z 12 XE	55	09/2000 →		0,9	12	063521120350	**MSN2004**
ASCONA C (81_, 86_, 87_, 88_)								
1.8	E 18 NV	62	09/1987 → 08/1988		1,2	12	063522601010	**MSN2601**
1.8 E	C 18 NE, S 18 NV	74	01/1985 → 08/1986		1,2	12	063522601010	**MSN2601**
2.0 i	20 NE	85	09/1986 → 08/1988		1,2	12	063522601010	**MSN2601**
2.0 i	C 20 NEF	74	08/1987 → 08/1988		1,2	12	063522601010	**MSN2601**
2.0 i Cat.	C 20 NE	85	09/1986 → 08/1988		1,2	12	063522601010	**MSN2601**
2.0 i GT	20 SEH	95	03/1987 → 08/1988		1,2	12	063522601010	**MSN2601**
ASCONA C 2 volumi /Coda spiovente (84_, 89_)								
1.8	E 18 NV	62	09/1987 → 08/1988		1,2	12	063522601010	**MSN2601**
2.0 i	20 NE	85	09/1986 → 08/1988		1,2	12	063522601010	**MSN2601**
2.0 i Cat.	C 20 NE	85	09/1986 → 08/1988		1,2	12	063522601010	**MSN2601**
2.0 i GT	20 SEH	95	03/1987 → 08/1988		1,2	12	063522601010	**MSN2601**
ASTRA F (56_, 57_)								
1.4	14 NV	55	09/1991 → 09/1993		0,9	12	063521120350	**MSN2004**
1.4 i	C 14 NZ, X 14 NZ	44	09/1991 → 09/1998		0,8	12	063522602010	**MSN2602**
1.4 i 16V	X 14 XE	66	02/1996 → 09/1998		0,8	12	063522602010	**MSN2602**

		kW		i	kW	V	LONG	SHORT
OPEL								
ASTRA F (56_, 57_)								
1.4 Si	C 14 SE	60	03/1992 → 09/1998		0,8	12	063522602010	**MSN2602**
1.6	16 LZ2, 16 NZR	55	09/1995 → 09/1998		0,9	12	063521120350	**MSN2004**
1.6	16 LZ2, 16 NZR	55	09/1995 → 09/1998		0,8	12	063522602010	**MSN2602**
1.6 i	C 16 NZ, X 16 SZR	55	03/1992 → 08/1994		0,9	12	063521120350	**MSN2004**
1.6 i	C 16 NZ, X 16 SZR	55	03/1992 → 09/1998		0,8	12	063522602010	**MSN2602**
1.6 i	X 16 SZ	52	05/1993 → 07/1996		0,9	12	063521120350	**MSN2004**
1.6 i	X 16 SZR	55	08/1996 → 09/1998		0,8	12	063522602010	**MSN2602**
1.6 i 16V	X 16 XEL	74	08/1994 → 09/1998		0,9	12	063521120350	**MSN2004**
1.6 Si	C 16 SE	74	05/1992 → 12/1994		0,9	12	063521120350	**MSN2004**
1.6 Si	C 16 SE	74	05/1992 → 12/1994		0,8	12	063522602010	**MSN2602**
1.8 i	C 18 NZ	66	03/1992 → 09/1998		1,2	12	063522601010	**MSN2601**
2.0 i	C 20 NE	85	03/1992 → 09/1998		1,2	12	063522601010	**MSN2601**
ASTRA F 2 volumi /Coda spiovente (53_, 54_, 58_, 59_)								
1.4 i	C 14 NZ	44	03/1992 → 01/1998		0,8	12	063522602010	**MSN2602**
1.4 i 16V	X 14 XE	66	01/1996 → 01/1998		0,8	12	063522602010	**MSN2602**
1.4 Si	C 14 SE	60	03/1992 → 01/1998		0,8	12	063522602010	**MSN2602**
1.6	16 LZ2, 16 NZR	55	09/1995 → 01/1998		0,9	12	063521120350	**MSN2004**
1.6	16 LZ2, 16 NZR	55	09/1995 → 01/1998		0,8	12	063522602010	**MSN2602**
1.6 i	C 16 NZ, X 16 SZR	55	09/1991 → 01/1998		0,9	12	063521120350	**MSN2004**
1.6 i	C 16 NZ, X 16 SZR	55	09/1991 → 01/1998		0,8	12	063522602010	**MSN2602**
1.6 i	X 16 SZ	52	05/1993 → 07/1996		0,9	12	063521120350	**MSN2004**
1.6 i 16V	X 16 XEL	74	08/1994 → 01/1998		0,9	12	063521120350	**MSN2004**
1.6 i 16V	X 16 XEL	74	08/1994 → 01/1998		0,8	12	063522602010	**MSN2602**
1.6 Si	C 16 SE	74	03/1992 → 12/1994		0,9	12	063521120350	**MSN2004**
1.6 Si	C 16 SE	74	03/1992 → 12/1994		0,8	12	063522602010	**MSN2602**
1.8 i	C 18 NZ	66	09/1991 → 01/1998		1,2	12	063522601010	**MSN2601**
2.0 GSI 16V	C 20 XE	110	09/1991 → 01/1998		1,2	12	063522601010	**MSN2601**
2.0 i	C 20 NE	85	09/1991 → 01/1998		1,2	12	063522601010	**MSN2601**
ASTRA F Cabriolet (53_B)								
1.4 i 16V	X 14 XE	66	01/1996 → 03/2001		0,8	12	063522602010	**MSN2602**
1.4 Si	C 14 SE	60	05/1993 → 03/2001		0,8	12	063522602010	**MSN2602**
1.6 i	X 16 SZ	52	03/1993 → 08/1996		0,9	12	063521120350	**MSN2004**
1.6 i	X 16 SZR	55	01/1996 → 12/1998		0,9	12	063521120350	**MSN2004**
1.6 i	X 16 SZR	55	01/1996 → 03/2001		0,8	12	063522602010	**MSN2602**
2.0 i	C 20 NE	85	03/1993 → 10/1994		1,2	12	063522601010	**MSN2601**
ASTRA F CLASSIC 2 volumi /Coda spiovente								
1.4 i	X 14 NZ	44	01/1998 → 08/2002		0,9	12	063521120350	**MSN2004**
1.6 i	X 16 SZR	55	01/1998 → 08/2002		0,9	12	063521120350	**MSN2004**
1.6 i 16V	X 16 XEL	74	01/1998 → 08/2002		0,9	12	063521120350	**MSN2004**
ASTRA F CLASSIC Station wagon								
1.4 i	X 14 NZ	44	01/1998 → 01/2005		0,9	12	063521120350	**MSN2004**
1.6 i	X 16 SZR	55	01/1998 → 01/2005		0,9	12	063521120350	**MSN2004**
1.6 i 16V	X 16 XEL	74	01/1998 → 01/2005		0,9	12	063521120350	**MSN2004**

		kW			kW	V	LONG	SHORT
OPEL								
ASTRA F CLASSIC Tre volumi								
1.4 i	X 14 NZ	44	01/1998 → 08/2002		0,9	12	063521120350	**MSN2004**
1.6 i	X 16 SZR	55	01/1998 → 08/2002		0,9	12	063521120350	**MSN2004**
1.6 i 16V	X 16 XEL	74	01/1998 → 08/2002		0,9	12	063521120350	**MSN2004**
ASTRA F Station wagon (51_, 52_)								
1.4	14 NV	55	09/1991 → 09/1993		0,9	12	063521120350	**MSN2004**
1.4 i	C 14 NZ	44	09/1991 → 01/1998		0,8	12	063522602010	**MSN2602**
1.4 i 16V	X 14 XE	66	02/1996 → 01/1998		0,8	12	063522602010	**MSN2602**
1.4 Si	C 14 SE	60	03/1992 → 01/1998		0,8	12	063522602010	**MSN2602**
1.6 i	C 16 NZ, X 16 SZR	55	09/1991 → 01/1998		0,9	12	063521120350	**MSN2004**
1.6 i	C 16 NZ, X 16 SZR	55	09/1991 → 01/1998		0,8	12	063522602010	**MSN2602**
1.6 i	X 16 SZ	52	05/1993 → 07/1996		0,9	12	063521120350	**MSN2004**
1.6 i 16V	X 16 XEL	74	08/1994 → 01/1998		0,9	12	063521120350	**MSN2004**
1.6 Si	C 16 SE	74	03/1992 → 12/1994		0,9	12	063521120350	**MSN2004**
1.6 Si	C 16 SE	74	03/1992 → 12/1994		0,8	12	063522602010	**MSN2602**
1.8 i	C 18 NZ	66	09/1991 → 01/1998		1,2	12	063522601010	**MSN2601**
2.0 i	C 20 NE	85	09/1991 → 07/1994		1,2	12	063522601010	**MSN2601**
2.0 i 16V	C 20 XE	110	03/1993 → 01/1998		1,2	12	063522601010	**MSN2601**
ASTRA F Van (55_)								
1.4 i	C 14 NZ	44	10/1991 → 01/1999		0,8	12	063522602010	**MSN2602**
1.6 i	C 16 NZ	55	10/1991 → 04/1993		0,9	12	063521120350	**MSN2004**
1.6 i	C 16 NZ	55	10/1991 → 04/1993		0,8	12	063522602010	**MSN2602**
1.6 i	X 16 SZ	52	02/1993 → 07/1996		0,9	12	063521120350	**MSN2004**
ASTRA G 2 volumi /Coda spiovente (F48_, F08_)								
1.2 16V	X 12 XE	48	02/1998 → 09/2000		0,9	12	063521120350	**MSN2004**
1.2 16V	Z 12 XE	55	09/2000 → 01/2005		0,9	12	063521120350	**MSN2004**
1.4 16V	X 14 XE, Z 14 XE	66	02/1998 → 01/2005		0,9	12	063521120350	**MSN2004**
1.6	X 16 SZR	55	02/1998 → 09/2000		0,9	12	063521120350	**MSN2004**
1.6	Z 16 SE	62	09/2000 → 01/2005		0,9	12	063521120350	**MSN2004**
1.6 16V	X 16 XEL, Z 16 XE	74	02/1998 → 01/2005		0,9	12	063521120350	**MSN2004**
2.0 DI	X 20 DTL, Y 20 DTL	60	03/1998 → 08/2000		2,0	12	063521090680	**MSN2002**
2.0 DTI 16V	X 20 DTH, Y 20 DTH	74	09/2000 → 01/2004		2,0	12	063521090680	**MSN2002**
2.2 16V	Z 22 SE	108	03/2001 → 01/2005		1,8	12	063523803010	**MSN2801**
2.2 DTI	Y 22 DTR	92	09/2002 → 01/2004		2,0	12	063521090680	**MSN2002**
ASTRA G Cabriolet								
1.6 16V	Z 16 XE	74	03/2001 → 10/2005		0,9	12	063521120350	**MSN2004**
2.2 16V	Z 22 SE	108	03/2001 → 10/2005		1,8	12	063523803010	**MSN2801**
2.2 DTI	Y 22 DTR	92	09/2002 → 08/2005		2,0	12	063521090680	**MSN2002**
ASTRA G Coupe (F07_)								
2.2 16V	Z 22 SE	108	09/2000 → 05/2005		1,8	12	063523803010	**MSN2801**
2.2 DTI	Y 22 DTR	92	09/2002 → 05/2005		2,0	12	063521090680	**MSN2002**
ASTRA G Furgonato (F70)								
1.6	X 16 SZR	55	01/1999 → 09/2000		0,9	12	063521120350	**MSN2004**
1.6	Z 16 SE	62	09/2000 → 04/2005		0,9	12	063521120350	**MSN2004**
2.0 DI	X 20 DTL	60	01/1999 → 08/2000		2,0	12	063521090680	**MSN2002**

		kW			kW	V	LONG	SHORT
OPEL								
ASTRA G Station wagon (F35_)								
1.2 16V	X 12 XE	48	02/1998 → 09/2000		0,9	12	063521120350	**MSN2004**
1.2 16V	Z 12 XE	55	09/2000 → 07/2004		0,9	12	063521120350	**MSN2004**
1.4 16V	X 14 XE, Z 14 XE	66	06/1998 → 07/2004		0,9	12	063521120350	**MSN2004**
1.6	X 16 SZR	55	02/1998 → 09/2000		0,9	12	063521120350	**MSN2004**
1.6	Z 16 SE	62	09/2000 → 07/2004		0,9	12	063521120350	**MSN2004**
1.6 16V	X 16 XEL, Z 16 XE	74	02/1998 → 07/2004		0,9	12	063521120350	**MSN2004**
1.6 CNG	Z 16 YNG	71	03/2003 → 07/2004		0,9	12	063521120350	**MSN2004**
2.0 DI	X 20 DTL, Y 20 DTL	60	03/1998 → 08/2000		2,0	12	063521090680	**MSN2002**
2.0 DTI 16V	X 20 DTH, Y 20 DTH	74	09/2000 → 06/2004		2,0	12	063521090680	**MSN2002**
2.2 16V	Z 22 SE	108	03/2001 → 07/2004		1,8	12	063523803010	**MSN2801**
2.2 DTI	Y 22 DTR	92	09/2002 → 06/2004		2,0	12	063521090680	**MSN2002**
ASTRA G Tre volumi (F69_)								
1.2 16V	X 12 XE	48	09/1998 → 09/2000		0,9	12	063521120350	**MSN2004**
1.2 16V	Z 12 XE	55	09/2000 → 01/2005		0,9	12	063521120350	**MSN2004**
1.4 16V	X 14 XE, Z 14 XE	66	09/1998 → 01/2005		0,9	12	063521120350	**MSN2004**
1.6	X 16 SZR	55	09/1998 → 09/2000		0,9	12	063521120350	**MSN2004**
1.6	Z 16 SE	62	09/2000 → 01/2005		0,9	12	063521120350	**MSN2004**
1.6 16V	X 16 XEL, Z 16 XE	74	09/1998 → 01/2005		0,9	12	063521120350	**MSN2004**
2.0 DI	X 20 DTL, Y 20 DTL	60	09/1998 → 08/2000		2,0	12	063521090680	**MSN2002**
2.0 DTI 16V	X 20 DTH, Y 20 DTH	74	09/2000 → 01/2004		2,0	12	063521090680	**MSN2002**
2.2 16V	Z 22 SE	108	03/2001 → 01/2005		1,8	12	063523803010	**MSN2801**
2.2 DTI	Y 22 DTR	92	09/2002 → 01/2004		2,0	12	063521090680	**MSN2002**
ASTRA H Tre volumi								
1.3 CDTi	Z 13 DTH	66	02/2007 →		1,3	12	063280045010	**MSN8045**
ASTRA J								
1.4	A 14 XEL	64	12/2009 →		1,1	12	063521074920	**MSN2117**
1.4	A 14 XER	74	12/2009 →		1,1	12	063521074920	**MSN2117**
1.4 Turbo	A 14 NEL	88	10/2010 →		1,1	12	063521074920	**MSN2117**
1.4 Turbo	A 14 NET	103	12/2009 →		1,1	12	063521074920	**MSN2117**
ASTRA Sports Tourer (J)								
1.4	A 14 XER	74	10/2010 →		1,1	12	063521074920	**MSN2117**
1.4 Turbo	A 14 NEL	88	10/2010 →		1,1	12	063521074920	**MSN2117**
CALIBRA A (85_)								
2.0 i	C 20 NE	85	06/1990 → 07/1997		1,2	12	063522601010	**MSN2601**
2.0 i 16V	C 20 XE	110	06/1990 → 02/1994		1,2	12	063522601010	**MSN2601**
2.0 i 16V 4x4	C 20 XE	110	06/1990 → 02/1994		1,2	12	063522601010	**MSN2601**
2.0 i 4x4	C 20 NE	85	06/1990 → 07/1997		1,2	12	063522601010	**MSN2601**
2.0 i Turbo 4x4	C 20 LET	150	03/1992 → 07/1997		1,2	12	063522601010	**MSN2601**
COMBO (71_)								
1.2	C 12 NZ, X 12 SZ	33	07/1994 → 10/2001		0,9	12	063521120350	**MSN2004**
1.4	C 14 NZ, X 14 SZ	44	07/1994 → 10/2001		0,9	12	063521120350	**MSN2004**
1.4	C 14 SE	60	07/1994 → 10/2001		0,9	12	063521120350	**MSN2004**
1.4	C 14 SE	60	07/1994 → 10/2001		0,8	12	063522602010	**MSN2602**
1.4 16V	X 14 XE	66	08/1999 → 10/2001		0,9	12	063521120350	**MSN2004**

		kW			kW	V	LONG	SHORT
OPEL								
COMBO Cassone / Furgonato / Promiscuo								
1.3 CDTI 16V	Z 13 DTJ	55	10/2005 →		1,3	12	063280045010	**MSN8045**
1.6	Z 16 SE	64	10/2001 →		0,9	12	063521120350	**MSN2004**
COMBO Tour								
1.3 CDTI 16V	Z 13 DTJ	55	10/2005 →		1,3	12	063280045010	**MSN8045**
1.6	Z 16 SE	64	10/2001 →		0,9	12	063521120350	**MSN2004**
CORSA A 2 volumi /Coda spiovente (93_, 94_, 98_, 99_)								
1.2 i	C 12 NZ	33	09/1989 → 03/1993		0,8	12	063522602010	**MSN2602**
1.2 N	12 NV	38	01/1990 → 03/1993		0,8	12	063522602010	**MSN2602**
1.2 S	12 ST	40	09/1982 → 02/1990		0,8	12	063522602010	**MSN2602**
1.3	13 NB	44	09/1985 → 10/1989		0,8	12	063522602010	**MSN2602**
1.3 i	C 13 N	44	09/1986 → 09/1990		0,8	12	063522602010	**MSN2602**
1.3 S	13 SB	51	09/1982 → 10/1989		0,8	12	063522602010	**MSN2602**
1.4 i	C 14 NZ	44	01/1990 → 03/1993		0,8	12	063522602010	**MSN2602**
1.4 S	14 NV	53	01/1990 → 03/1993		0,8	12	063522602010	**MSN2602**
1.4 Si	C 14 SE	60	09/1991 → 03/1993		0,8	12	063522602010	**MSN2602**
1.6 GSI	C 16 NZ	55	09/1988 → 09/1992		0,9	12	063521120350	**MSN2004**
1.6 GSI	C 16 NZ	55	08/1988 → 09/1992		0,8	12	063522602010	**MSN2602**
1.6 GSI	C 16 SEI	72	09/1989 → 03/1993		0,9	12	063521120350	**MSN2004**
1.6 GSI	E 16 SE	74	05/1988 → 03/1992		0,9	12	063521120350	**MSN2004**
1.6 GSI	E 16 SE	74	05/1988 → 03/1992		0,8	12	063522602010	**MSN2602**
1.6 GSI Cat.	C 16 SE	74	02/1992 → 03/1993		0,9	12	063521120350	**MSN2004**
1.6 GSI Cat.	C 16 SE	74	02/1992 → 03/1993		0,8	12	063522602010	**MSN2602**
CORSA A Furgonato								
1.2	12 ST	40	02/1986 → 04/1989		0,8	12	063522602010	**MSN2602**
1.3	13 NB	44	02/1986 → 04/1989		0,8	12	063522602010	**MSN2602**
1.3	13 SB	51	02/1986 → 04/1989		0,8	12	063522602010	**MSN2602**
CORSA A TR (91_, 92_, 96_, 97_)								
1.2 S	12 S	43	09/1982 → 10/1987		0,8	12	063522602010	**MSN2602**
1.2 S	12 ST	40	09/1982 → 03/1993		0,8	12	063522602010	**MSN2602**
1.3	13 NB, C 13 N	44	09/1985 → 10/1987		0,8	12	063522602010	**MSN2602**
1.3 S	13 SB	51	09/1982 → 10/1987		0,8	12	063522602010	**MSN2602**
1.4 S	14 NV	53	09/1989 → 03/1993		0,8	12	063522602010	**MSN2602**
CORSA B (73_, 78_, 79_)								
1.2 i	12 NZ	33	03/1993 → 09/2000		0,9	12	063521120350	**MSN2004**
1.2 i	C 12 NZ, X 12 SZ	33	03/1993 → 09/2000		0,9	12	063521120350	**MSN2004**
1.2 i 16V	X 12 XE	48	03/1998 → 09/2000		0,9	12	063521120350	**MSN2004**
1.4 i	C 14 NZ, X 14 SZ	44	03/1993 → 09/2000		0,9	12	063521120350	**MSN2004**
1.4 i 16V	C 14 SEL	63	08/1997 → 09/2000		0,9	12	063521120350	**MSN2004**
1.4 i 16V	X 14 XE	66	09/1994 → 09/2000		0,9	12	063521120350	**MSN2004**
1.4 Si	C 14 SE	60	03/1993 → 09/2000		0,9	12	063521120350	**MSN2004**
1.6 GSI 16V	C 16 XE	80	03/1993 → 09/2000		0,9	12	063521120350	**MSN2004**
1.6 i 16V	C 16 SEL	74	08/1997 → 09/2000		0,9	12	063521120350	**MSN2004**
1.6 i 16V	X 16 XE	78	09/1994 → 09/2000		0,9	12	063521120350	**MSN2004**

		kW			kW	V	LONG	SHORT
OPEL								
CORSA C (F08, F68)								
1.2	Z 12 XE	55	09/2000 →		0,9	12	063521120350	**MSN2004**
1.4	Z 14 XE	66	09/2000 →		0,9	12	063521120350	**MSN2004**
CORSA C Furgonato (F08, W5L)								
1.2 16V	Z 12 XE	55	09/2000 →		0,9	12	063521120350	**MSN2004**
CORSA D								
1.3 CDTI	A 13 DTC, Z 13 DTJ	55	07/2006 →		1,3	12	063280045010	**MSN8045**
FRONTERA A Sport (5_SUD2)								
2.0 i (52SUD2, 55SUD2)	C 20 NE, X 20 SE	85	03/1992 → 10/1998		1,2	12	063522601010	**MSN2601**
FRONTERA B (6B_)								
2.2 DTI	Y 22 DTH	88	09/2002 → 09/2004		2,0	12	063521090680	**MSN2002**
2.2 DTI (6B_ZC, 6B_VF, 6B_66, 6B_76)	X 22 DTH, Y 22 DTH	85	10/1998 → 09/2002		2,0	12	063521090680	**MSN2002**
KADETT E (39_, 49_)								
1.4 i	C 14 NZ	44	01/1990 → 08/1991		0,8	12	063522602010	**MSN2602**
1.6 i	E 16 NZ	55	09/1988 → 08/1991		0,9	12	063521120350	**MSN2004**
1.6 i	E 16 NZ	55	09/1986 → 08/1991		0,8	12	063522602010	**MSN2602**
1.6 i Cat.	C 16 LZ, C 16 NZ	55	09/1988 → 08/1991		0,9	12	063521120350	**MSN2004**
1.6 i Cat.	C 16 LZ, C 16 NZ	55	09/1986 → 08/1991		0,8	12	063522602010	**MSN2602**
1.6 S	16 SH	66	09/1984 → 08/1986		0,9	12	063521120350	**MSN2004**
1.6 S	16 SV	60	09/1986 → 08/1991		0,9	12	063521120350	**MSN2004**
1.8 i	18 E	85	09/1984 → 08/1986		1,2	12	063522601010	**MSN2601**
1.8 i	C 18 NT, C 18 NZ	66	09/1990 → 08/1991		1,2	12	063522601010	**MSN2601**
1.8 S	E 18 NV	62	09/1987 → 08/1991		1,2	12	063522601010	**MSN2601**
2.0 i	20 NE	85	03/1987 → 08/1991		1,2	12	063522601010	**MSN2601**
2.0 i Cat.	C 20 NE	85	03/1987 → 08/1991		1,2	12	063522601010	**MSN2601**
KADETT E 2 volumi /Coda spiovente (33_, 34_, 43_, 44_)								
1.4 i	C 14 NZ	44	01/1990 → 08/1991		0,8	12	063522602010	**MSN2602**
1.6 i	E 16 NZ	55	09/1988 → 08/1991		0,9	12	063521120350	**MSN2004**
1.6 i	E 16 NZ	55	09/1986 → 08/1991		0,8	12	063522602010	**MSN2602**
1.6 i Cat.	C 16 LZ, C 16 NZ	55	09/1988 → 08/1991		0,9	12	063521120350	**MSN2004**
1.6 i Cat.	C 16 LZ, C 16 NZ	55	09/1986 → 08/1991		0,8	12	063522602010	**MSN2602**
1.6 S	16 SH	66	09/1984 → 08/1986		0,9	12	063521120350	**MSN2004**
1.6 S	16 SV	60	09/1988 → 08/1991		0,9	12	063521120350	**MSN2004**
1.6 S	16 SV	60	09/1986 → 08/1991		0,8	12	063522602010	**MSN2602**
1.8 GSI	18 E	85	09/1984 → 08/1986		1,2	12	063522601010	**MSN2601**
1.8 i	C 18 NT, C 18 NZ, S 18 NV	66	06/1985 → 08/1991		1,2	12	063522601010	**MSN2601**
1.8 S	E 18 NV, S 18 NV	62	09/1987 → 08/1991		1,2	12	063522601010	**MSN2601**
2.0 GSI	20 NE	85	09/1986 → 08/1991		1,2	12	063522601010	**MSN2601**
2.0 GSI	20 SEH	95	09/1986 → 08/1991		1,2	12	063522601010	**MSN2601**
2.0 GSI 16V	20 XE	115	12/1987 → 08/1991		1,2	12	063522601010	**MSN2601**
2.0 GSI 16V	20 XEJ	110	03/1988 → 08/1991		1,2	12	063522601010	**MSN2601**
2.0 GSI 16V Cat.	C 20 XE	110	03/1988 → 08/1991		1,2	12	063522601010	**MSN2601**
2.0 GSI Cat.	C 20 NE	85	09/1986 → 08/1991		1,2	12	063522601010	**MSN2601**

		kW			kW	V	LONG	SHORT
OPEL								
KADETT E Cabriolet (43B_)								
1.4 i	C 14 NZ	44	01/1990 → 08/1991		0,8	12	063522602010	**MSN2602**
1.6 i	16 SV	60	07/1989 → 12/1991		0,9	12	063521120350	**MSN2004**
1.6 i	E 16 NZ	55	09/1988 → 12/1991		0,9	12	063521120350	**MSN2004**
1.6 i	E 16 NZ	55	10/1986 → 02/1993		0,8	12	063522602010	**MSN2602**
1.6 i Cat.	C 16 LZ, C 16 NZ	55	09/1988 → 12/1991		0,9	12	063521120350	**MSN2004**
1.6 i Cat.	C 16 LZ, C 16 NZ	55	10/1987 → 02/1993		0,8	12	063522602010	**MSN2602**
2.0 i	20 NE	85	10/1986 → 02/1993		1,2	12	063522601010	**MSN2601**
2.0 i Cat.	C 20 NE	85	10/1986 → 02/1993		1,2	12	063522601010	**MSN2601**
KADETT E Combo (38_, 48_)								
1.6	16 SV	60	09/1988 → 12/1991		0,9	12	063521120350	**MSN2004**
1.6 i	C 16 NZ	55	08/1991 → 07/1994		0,8	12	063522602010	**MSN2602**
KADETT E Furgonato (37_, 47_)								
1.4 i	C 14 NZ	44	01/1990 → 08/1991		0,8	12	063522602010	**MSN2602**
1.6 i	C 16 NZ	55	08/1989 → 12/1991		0,9	12	063521120350	**MSN2004**
KADETT E Station wagon (35_, 36_, 45_, 46_)								
1.4 i	C 14 NZ	44	01/1990 → 08/1991		0,8	12	063522602010	**MSN2602**
1.6	16 SV	60	09/1986 → 08/1991		0,9	12	063521120350	**MSN2004**
1.6 i	E 16 NZ	55	09/1988 → 08/1991		0,9	12	063521120350	**MSN2004**
1.6 i	E 16 NZ	55	09/1986 → 08/1991		0,8	12	063522602010	**MSN2602**
1.6 i Cat.	C 16 LZ, C 16 NZ	55	09/1988 → 08/1991		0,9	12	063521120350	**MSN2004**
1.6 i Cat.	C 16 LZ, C 16 NZ	55	09/1986 → 08/1991		0,8	12	063522602010	**MSN2602**
1.6 S	16 SH	66	09/1984 → 08/1986		0,9	12	063521120350	**MSN2004**
1.8 i	18 E	85	09/1984 → 08/1986		1,2	12	063522601010	**MSN2601**
1.8 i	C 18 NT, C 18 NZ	66	06/1985 → 08/1991		1,2	12	063522601010	**MSN2601**
1.8 S	E 18 NV	62	09/1987 → 08/1991		1,2	12	063522601010	**MSN2601**
2.0 i	20 NE	85	09/1987 → 08/1991		1,2	12	063522601010	**MSN2601**
2.0 i Cat.	C 20 NE	85	09/1987 → 08/1991		1,2	12	063522601010	**MSN2601**
MERIVA								
1.3 CDTI	Y 13 DT, Z 13 DT	51	04/2005 → 03/2010		1,1	12	063521074370	**MSN2078**
1.6	Z 16 SE	64	05/2003 → 05/2010		0,9	12	063521120350	**MSN2004**
1.6 16V	Z 16 XE	74	05/2003 → 05/2010		0,9	12	063521120350	**MSN2004**
MERIVA B								
1.4	A 14 NEL	88	06/2010 →		1,1	12	063521074920	**MSN2117**
1.4	A 14 NET	103	06/2010 →		1,1	12	063521074920	**MSN2117**
1.4	A 14 XER	74	06/2010 →		1,1	12	063521074920	**MSN2117**
OMEGA A (16_, 17_, 19_)								
1.8	18 SEH	85	09/1986 → 03/1994		1,2	12	063522601010	**MSN2601**
1.8	E 18 NVR	65	09/1987 → 03/1994		1,2	12	063522601010	**MSN2601**
1.8 N	18 NV	60	09/1986 → 08/1987		1,2	12	063522601010	**MSN2601**
1.8 S	18 SV	66	09/1986 → 03/1994		1,2	12	063522601010	**MSN2601**
2.0	20 SE	90	09/1986 → 03/1994		1,2	12	063522601010	**MSN2601**
2.0	C 20 NEF	74	09/1990 → 03/1994		1,2	12	063522601010	**MSN2601**
2.0	C 20 NEJ	73	09/1990 → 03/1994		1,2	12	063522601010	**MSN2601**
2.0 i	C 20 NE	85	09/1986 → 03/1994		1,2	12	063522601010	**MSN2601**

		kW			kW	V	LONG	SHORT
OPEL								
OMEGA A Station wagon (66_, 67_)								
1.8	18 SEH	85	09/1986 → 03/1994		1,2	12	063522601010	**MSN2601**
1.8	E 18 NVR	65	09/1987 → 03/1994		1,2	12	063522601010	**MSN2601**
1.8 N	18 NV	60	09/1986 → 08/1987		1,2	12	063522601010	**MSN2601**
1.8 S	18 SV	66	09/1986 → 03/1994		1,2	12	063522601010	**MSN2601**
2.0	20 SE	90	09/1986 → 03/1994		1,2	12	063522601010	**MSN2601**
2.0	C 20 NEF	74	09/1990 → 03/1994		1,2	12	063522601010	**MSN2601**
2.0 i	C 20 NE	85	09/1986 → 03/1994		1,2	12	063522601010	**MSN2601**
2.0 i	C 20 NEJ	73	09/1990 → 03/1994		1,2	12	063522601010	**MSN2601**
OMEGA B (25_, 26_, 27_)								
2.0 DTI 16V	X 20 DTH	74	09/1997 → 08/2000		2,0	12	063521090680	**MSN2002**
2.2 DTI 16V	Y 22 DTH	81	09/2000 → 07/2003		2,0	12	063521090680	**MSN2002**
2.2 DTI 16V	Y 22 DTH	88	09/2000 → 07/2003		2,0	12	063521090680	**MSN2002**
OMEGA B Station wagon (21_, 22_, 23_)								
2.0 DTI 16V	X 20 DTH	74	09/1997 → 08/2000		2,0	12	063521090680	**MSN2002**
2.2 DTI 16V	Y 22 DTH	81	09/2000 → 07/2003		2,0	12	063521090680	**MSN2002**
2.2 DTI 16V	Y 22 DTH	88	09/2000 → 07/2003		2,0	12	063521090680	**MSN2002**
SIGNUM								
2.0 DTI	Y 20 DTH	74	05/2003 → 09/2005		2,0	12	063521090680	**MSN2002**
2.2 DTI	Y 22 DTR	92	05/2003 → 09/2005		2,0	12	063521090680	**MSN2002**
SINTRA								
2.2 DTI	X 22 DTH	85	09/1997 → 04/1999		2,0	12	063521090680	**MSN2002**
SPEEDSTER								
2.2	Z 22 SE	108	09/2000 →		1,8	12	063523803010	**MSN2801**
TIGRA (95_)								
1.4 16V	X 14 XE	66	07/1994 → 12/2000		0,9	12	063521120350	**MSN2004**
1.4 16V	X 14 XE	63	08/1997 → 12/2000		0,9	12	063521120350	**MSN2004**
1.6 16V	C 16 SEL	74	08/1997 → 08/1998		0,9	12	063521120350	**MSN2004**
1.6 16V	X 16 XE	78	07/1994 → 08/1998		0,9	12	063521120350	**MSN2004**
1.6 16V	X 16 XE	78	07/1994 → 08/1998		0,8	12	063522602010	**MSN2602**
VECTRA A (86_, 87_)								
1.4 S	14 NV	55	09/1988 → 06/1992		0,9	12	063521120350	**MSN2004**
1.4 S	14 NV	55	09/1988 → 06/1992		0,8	12	063522602010	**MSN2602**
1.6	16 SV	60	09/1988 → 05/1993		0,9	12	063521120350	**MSN2004**
1.6	16 SV	60	09/1988 → 05/1993		0,8	12	063522602010	**MSN2602**
1.6 i	16 LZ2	55	09/1993 → 12/1994		0,9	12	063521120350	**MSN2004**
1.6 i	E 16 NZ	55	09/1988 → 10/1990		0,9	12	063521120350	**MSN2004**
1.6 i	E 16 NZ	55	09/1988 → 10/1990		0,8	12	063522602010	**MSN2602**
1.6 i	X 16 SZ	52	09/1993 → 12/1994		0,9	12	063521120350	**MSN2004**
1.6 i	X 16 SZ	52	09/1993 → 11/1995		0,8	12	063522602010	**MSN2602**
1.6 i Cat.	C 16 NZ, C 16 NZ2	55	09/1988 → 11/1995		0,9	12	063521120350	**MSN2004**
1.6 i Cat.	C 16 NZ, C 16 NZ2	55	09/1988 → 11/1995		0,8	12	063522602010	**MSN2602**
1.8 i Cat.	C 18 NZ	66	03/1990 → 11/1995		1,2	12	063522601010	**MSN2601**
1.8 S	18 SV	66	09/1989 → 10/1990		1,2	12	063522601010	**MSN2601**
1.8 S	E 18 NVR	65	09/1988 → 07/1989		1,2	12	063522601010	**MSN2601**

		kW			kW	V	LONG	SHORT
OPEL								
VECTRA A (86_, 87_)								
1.8 S 4x4	E 18 NVR	65	01/1989 → 07/1989		1,2	12	063522601010	**MSN2601**
2.0	C 20 NEF	74	09/1988 → 09/1989		1,2	12	063522601010	**MSN2601**
2.0 i	20 NE	85	09/1988 → 10/1990		1,2	12	063522601010	**MSN2601**
2.0 i	20 SEH	95	09/1988 → 09/1992		1,2	12	063522601010	**MSN2601**
2.0 i 4x4	20 NE	85	01/1989 → 10/1990		1,2	12	063522601010	**MSN2601**
2.0 i 4x4	20 SEH	95	01/1989 → 09/1992		1,2	12	063522601010	**MSN2601**
2.0 i 4x4 Cat.	C 20 NE	85	01/1989 → 11/1995		1,2	12	063522601010	**MSN2601**
2.0 i Cat.	C 20 NE	85	09/1988 → 11/1995		1,2	12	063522601010	**MSN2601**
2.0 i Turbo 4x4	C 20 LET	150	06/1994 → 11/1995		1,2	12	063522601010	**MSN2601**
2000 16V 4x4	20 XEJ	110	01/1989 → 10/1990		1,2	12	063522601010	**MSN2601**
2000/GT 16V	20 XEJ	110	01/1989 → 06/1994		1,2	12	063522601010	**MSN2601**
2000/GT 16V 4x4 Cat.	C 20 XE	110	02/1990 → 11/1995		1,2	12	063522601010	**MSN2601**
2000/GT 16V Cat.	C 20 XE	110	02/1990 → 11/1995		1,2	12	063522601010	**MSN2601**
VECTRA A 2 volumi /Coda spiovente (88_, 89_)								
1.4 S	14 NV	55	04/1988 → 06/1992		0,9	12	063521120350	**MSN2004**
1.6 i	16 LZ2	55	09/1993 → 11/1995		0,9	12	063521120350	**MSN2004**
1.6 i	X 16 SZ	52	09/1993 → 11/1995		0,9	12	063521120350	**MSN2004**
1.6 i	X 16 SZ	52	09/1993 → 11/1995		0,8	12	063522602010	**MSN2602**
1.6 i Cat.	C 16 NZ, C 16 NZ2	55	09/1988 → 11/1995		0,9	12	063521120350	**MSN2004**
1.6 i Cat.	C 16 NZ, C 16 NZ2	55	09/1988 → 11/1995		0,8	12	063522602010	**MSN2602**
1.6 S	16 SV	60	09/1988 → 05/1993		0,9	12	063521120350	**MSN2004**
1.6 S	16 SV	60	09/1988 → 05/1993		0,8	12	063522602010	**MSN2602**
1.8 i	18 SV	66	09/1988 → 10/1990		1,2	12	063522601010	**MSN2601**
1.8 i Cat.	C 18 NZ	66	03/1990 → 11/1995		1,2	12	063522601010	**MSN2601**
1.8 S	E 18 NVR	65	09/1988 → 07/1989		1,2	12	063522601010	**MSN2601**
2.0	C 20 NEF	74	04/1988 → 09/1989		1,2	12	063522601010	**MSN2601**
2.0 i	20 NE	85	09/1988 → 10/1990		1,2	12	063522601010	**MSN2601**
2.0 i 16V	20 XEJ	110	02/1989 → 10/1990		1,2	12	063522601010	**MSN2601**
2.0 i 16V Cat.	C 20 XE	110	02/1990 → 11/1995		1,2	12	063522601010	**MSN2601**
2.0 i Cat.	C 20 NE	85	09/1988 → 11/1995		1,2	12	063522601010	**MSN2601**
2.0 i GT	20 SEH	95	09/1988 → 11/1995		1,2	12	063522601010	**MSN2601**
VECTRA B (36_)								
1.6 i	X 16 SZR	55	10/1995 → 04/2002		0,9	12	063521120350	**MSN2004**
1.6 i 16V	X 16 XEL, Y 16 XE, Z 16 XE	74	10/1995 → 04/2002		0,9	12	063521120350	**MSN2004**
2.0 DI 16V	X 20 DTL	60	11/1996 → 04/2002		2,0	12	063521090680	**MSN2002**
2.0 DTI 16V	X 20 DTH, Y 20 DTH	74	09/1997 → 04/2002		2,0	12	063521090680	**MSN2002**
2.2 DTI 16V	Y 22 DTR	92	09/2000 → 04/2002		2,0	12	063521090680	**MSN2002**
2.2 i 16V	Z 22 SE	108	09/2000 → 04/2002		1,8	12	063523803010	**MSN2801**
VECTRA B 2 volumi /Coda spiovente (38_)								
1.6 i	16 LZ2	55	10/1995 → 07/2003		0,9	12	063521120350	**MSN2004**
1.6 i	X 16 SZR	55	10/1995 → 07/2003		0,9	12	063521120350	**MSN2004**
1.6 i 16V	X 16 XEL, Y 16 XE, Z 16 XE	74	10/1995 → 07/2002		0,9	12	063521120350	**MSN2004**

		kW			kW	V	LONG	SHORT
OPEL								
VECTRA B 2 volumi /Coda spiovente (38_)								
2.0 DI 16V	X 20 DTL	60	11/1996 → 06/2000		2,0	12	063521090680	**MSN2002**
2.0 DTI 16V	X 20 DTH, Y 20 DTH	74	09/1997 → 07/2003		2,0	12	063521090680	**MSN2002**
2.2 DTI 16V	Y 22 DTR	92	09/2000 → 07/2003		2,0	12	063521090680	**MSN2002**
2.2 i 16V	Z 22 SE	108	09/2000 → 07/2003		1,8	12	063523803010	**MSN2801**
VECTRA B Station wagon (31_)								
1.6 i	16 LZ2	55	11/1996 → 06/2000		0,9	12	063521120350	**MSN2004**
1.6 i	X 16 SZR	55	11/1996 → 06/2000		0,9	12	063521120350	**MSN2004**
1.6 i 16V	X 16 XEL, Y 16 XE, Z 16 XE	74	11/1996 → 07/2002		0,9	12	063521120350	**MSN2004**
2.0 DI 16V	X 20 DTL	60	11/1996 → 06/2000		2,0	12	063521090680	**MSN2002**
2.0 DTI 16V	X 20 DTH, Y 20 DTH	74	09/1997 → 07/2003		2,0	12	063521090680	**MSN2002**
2.2 DTI 16V	Y 22 DTR	92	09/2000 → 07/2003		2,0	12	063521090680	**MSN2002**
2.2 i 16V	Z 22 SE	108	09/2000 → 07/2003		1,8	12	063523803010	**MSN2801**
VECTRA C								
1.6 16V	Z 16 XE	74	06/2004 →		0,9	12	063521120350	**MSN2004**
2.0 DTI 16V	Y 20 DTH	74	04/2002 → 09/2005		2,0	12	063521090680	**MSN2002**
2.2 16V	Z 22 SE	108	04/2002 →		1,8	12	063523803010	**MSN2801**
2.2 DTI 16V	Y 22 DTR	92	04/2002 → 09/2005		2,0	12	063521090680	**MSN2002**
VECTRA C GTS								
2.0 DTI 16V	Y 20 DTH	74	08/2002 → 09/2005		2,0	12	063521090680	**MSN2002**
2.2 16V	Z 22 SE	108	08/2002 →		1,8	12	063523803010	**MSN2801**
2.2 DTI 16V	Y 22 DTR	92	08/2002 → 09/2005		2,0	12	063521090680	**MSN2002**
VECTRA C Station wagon								
2.0 DTI	Y 20 DTH	74	10/2003 → 09/2005		2,0	12	063521090680	**MSN2002**
2.2 DTI	Y 22 DTR	92	10/2003 → 09/2005		2,0	12	063521090680	**MSN2002**
ZAFIRA (F75_)								
1.6 16V	X 16 XEL, Z 16 XE	74	04/1999 → 06/2005		0,9	12	063521120350	**MSN2004**
1.6 CNG	Z 16 YNG	71	09/2001 → 06/2005		0,9	12	063521120350	**MSN2004**
2.0 DI 16V	X 20 DTL	60	10/1999 → 08/2000		2,0	12	063521090680	**MSN2002**
2.0 DTI 16V	Y 20 DTH	74	09/2000 → 06/2005		2,0	12	063521090680	**MSN2002**
2.2 16V	Z 22 SE	108	09/2000 → 06/2005		1,8	12	063523803010	**MSN2801**
2.2 DTI 16V	Y 22 DTR	92	03/2002 → 06/2005		2,0	12	063521090680	**MSN2002**
PEUGEOT								
1007 (KM_)								
1.4	KFV (TU3JP)	54	04/2005 →		1,0	12	063521120410	**MSN2029**
1.6 16V	NFU (TU5JP4)	80	04/2005 →		1,0	12	063521120410	**MSN2029**
106 I (1A, 1C)								
1.0	CDY (TU9M), TU9	33	07/1992 → 04/1996		1,0	12	063521120410	**MSN2029**
1.0	CDZ (TU9M)	37	07/1992 → 04/1996		1,0	12	063521120410	**MSN2029**
1.1	HDZ (TU1M)	44	09/1991 → 12/1993		1,0	12	063521120410	**MSN2029**
1.3	TU2J2	72	10/1993 → 04/1996		1,0	12	063521120410	**MSN2029**
1.4	KDX (TU3MC), KDY (TU3M)	55	09/1991 → 04/1996		1,0	12	063521120410	**MSN2029**
1.4	KFZ (TU3J2/Z)	69	09/1991 → 04/1996		1,0	12	063521120410	**MSN2029**

		kW			kW	V	LONG	SHORT
PEUGEOT								
106 I (1A, 1C)								
1.6	NFY (TU5J2)	76	01/1994 → 04/1996		1,0	12	063521120410	**MSN2029**
1.6	NFZ (TU5JP)	65	06/1993 → 04/1996		1,0	12	063521120410	**MSN2029**
106 II (1)								
1.0 i	CDY (TU9M)	33	05/1996 → 05/2005		1,0	12	063521120410	**MSN2029**
1.0 i	CDZ (TU9M)	37	01/1997 → 05/2005		1,0	12	063521120410	**MSN2029**
1.1 i	HDY (TU1M)	40	01/1997 → 05/2005		1,0	12	063521120410	**MSN2029**
1.1 i	HDZ (TU1M), HFX (TU1JP)	44	05/1996 → 05/2005		1,0	12	063521120410	**MSN2029**
1.4 i	KFW (TU3JP), KFX (TU3JP)	55	05/1996 → 05/2005		1,0	12	063521120410	**MSN2029**
1.6 i	NFW (TU5J2), NFY (TU5J2)	74	05/1996 → 05/2005		1,0	12	063521120410	**MSN2029**
1.6 i	NFZ (TU5JP)	65	05/1996 → 05/2005		1,0	12	063521120410	**MSN2029**
1.6 S16	NFX (TU5J4)	87	05/1996 → 05/2005		1,0	12	063521120410	**MSN2029**
205 I Cabriolet (741B, 20D)								
1.1 CJ	HDZ (TU1M)	44	10/1989 → 01/1992		1,0	12	063521120410	**MSN2029**
1.4	K2B (TU3S)	62	08/1987 → 12/1989		1,0	12	063521120410	**MSN2029**
1.4 CJ	K1D (TU3A)	49	03/1989 → 01/1992		1,0	12	063521120410	**MSN2029**
1.4 CJ	KDY (TU3M), KDZ (TU3M)	55	06/1991 → 01/1992		1,0	12	063521120410	**MSN2029**
1.4 CJ Cat.	KAY (TU3CP)	44	01/1989 → 10/1990		1,0	12	063521120410	**MSN2029**
1.6 CJ	BDY (XU5M3Z)	65	08/1992 → 12/1994		1,1	12	063521070630	**MSN2015**
1.9 CTI	DFZ (XU9J1)	75	10/1990 → 10/1994		1,1	12	063521070630	**MSN2015**
205 II (20A/C)								
1.0	TU9	33	10/1987 → 01/1992		1,0	12	063521120410	**MSN2029**
1.1	H1B (TU1)	40	10/1987 → 10/1990		1,0	12	063521120410	**MSN2029**
1.1	HDZ (TU1M)	44	07/1989 → 01/1992		1,0	12	063521120410	**MSN2029**
1.3 Rallye	TU24	74	10/1987 → 10/1990		1,0	12	063521120410	**MSN2029**
1.4	K1D (TU3A)	49	10/1987 → 10/1990		1,0	12	063521120410	**MSN2029**
1.4	K2B (TU3S)	62	06/1987 → 12/1989		1,0	12	063521120410	**MSN2029**
1.4	KDX (TU3MC), TU32	55	09/1992 → 07/1998		1,0	12	063521120410	**MSN2029**
1.4	KDY (TU3M), KDZ (TU3M), KFX (TU3JP)	55	07/1988 → 01/1992		1,0	12	063521120410	**MSN2029**
1.4 Cat.	KAY (TU3CP)	44	08/1987 → 10/1990		1,0	12	063521120410	**MSN2029**
1.6	171 (XU5S)	66	11/1990 → 07/1992		1,1	12	063521070630	**MSN2015**
1.6	B1E (XU51C)	53	11/1990 → 09/1998		1,1	12	063521070630	**MSN2015**
1.6 Aut.	BDY (XU5M2Z), BDY (XU5M3Z)	65	11/1990 → 09/1998		1,1	12	063521070630	**MSN2015**
1.9 GTI	D2A (XU92C)	75	10/1987 → 05/1989		1,1	12	063521070630	**MSN2015**
1.9 GTI	D6B (XU9JA (G-KAT))	94	10/1990 → 09/1998		1,1	12	063521070630	**MSN2015**
1.9 GTI	DKZ (XU9JAZ)	88	10/1990 → 10/1994		1,1	12	063521070630	**MSN2015**
1.9 GTI Cat.	DFZ (XU9J1)	75	10/1990 → 07/1994		1,1	12	063521070630	**MSN2015**
206 2 volumi /Coda spiovente (2A/C)								
1.1		40	08/1998 → 07/2000		1,0	12	063521120410	**MSN2029**

		kW			kW	V	LONG	SHORT
PEUGEOT								
206 2 volumi /Coda spiovente (2A/C)								
1.1 i	HFX (TU1JP), HFZ (TU1JP)	44	09/1998 → 10/2005		1,0	12	063521120410	**MSN2029**
1.4 i	KFW (TU3JP), KFX (TU3JP), TU 3 JP	55	09/1998 → 02/2009		1,0	12	063521120410	**MSN2029**
1.4 LPG		55	05/2006 → 09/2007		1,0	12	063521120410	**MSN2029**
1.6 16V	NFU (TU5JP4)	80	12/2000 → 08/2007		1,0	12	063521120410	**MSN2029**
1.6 i	NFZ (TU5JP)	65	09/1998 → 12/2000		1,0	12	063521120410	**MSN2029**
1.9 D	WJZ (DW8)	51	09/1998 → 10/2001		1,4	12	063521084000	**MSN2083**
2.0 HDI 90	RHY (DW10TD)	66	12/1999 → 10/2005		1,4	12	063521084000	**MSN2083**
2.0 RC	RFK (EW10J4S)	130	07/2003 → 08/2006		1,4	12	063521084000	**MSN2083**
2.0 S16	RFN (EW10J4)	100	10/2000 → 11/2004		1,4	12	063521084000	**MSN2083**
2.0 S16	RFR (DEW10J4)	99	04/1999 → 09/2000		1,4	12	063521084000	**MSN2083**
206 CC (2D)								
1.6 16V	NFU (TU5JP4)	80	09/2000 → 03/2007		1,0	12	063521120410	**MSN2029**
2.0 S16	RFN (EW10J4)	100	09/2000 → 03/2007		1,4	12	063521084000	**MSN2083**
206 SW (2E/K)								
1.1	HFX (TU1JP)	44	07/2002 → 10/2005		1,0	12	063521120410	**MSN2029**
1.4	KFW (TU3JP)	55	07/2002 → 12/2006		1,0	12	063521120410	**MSN2029**
1.6 16V	NFU (TU5JP4)	80	07/2002 → 12/2006		1,0	12	063521120410	**MSN2029**
2.0 16V	RFN (EW10J4)	100	07/2002 → 10/2005		1,4	12	063521084000	**MSN2083**
2.0 HDi	RHY (DW10TD)	66	07/2002 → 10/2005		1,4	12	063521084000	**MSN2083**
306 (7B, N3, N5)								
1.1	HDZ (TU1M)	44	06/1994 → 04/1997		1,0	12	063521120410	**MSN2029**
1.4 SL	KDX (TU3MC), KFW (TU3JP), KFX (TU3JP)	55	06/1994 → 04/1997		1,0	12	063521120410	**MSN2029**
1.6	NFT	72	10/2000 → 05/2001		1,0	12	063521120410	**MSN2029**
1.6 SR	NFZ (TU5JP)	65	06/1994 → 04/1997		1,0	12	063521120410	**MSN2029**
1.8	LFZ (XU7JP)	74	10/1995 → 04/1997		1,1	12	063521070630	**MSN2015**
1.8	LFZ (XU7JP)	74	10/1995 → 04/1997		1,4	12	063521081760	**MSN2079**
1.8 16V	LFY (XU7JP4)	81	05/1997 → 05/2001		1,1	12	063521070630	**MSN2015**
1.8 16V	LFY (XU7JP4)	81	05/1997 → 05/2001		1,4	12	063521081760	**MSN2079**
1.8 ST	LFZ (XU7JP)	74	06/1994 → 04/1997		1,1	12	063521070630	**MSN2015**
1.8 ST	LFZ (XU7JP)	74	06/1994 → 04/1997		1,4	12	063521081760	**MSN2079**
1.9 D	WJY (DW8B), WJZ (DW8)	51	09/1998 → 05/2001		1,4	12	063521084000	**MSN2083**
2.0	RFV (XU10J4R)	97	05/1997 → 05/2001		1,1	12	063521070630	**MSN2015**
2.0	RFV (XU10J4R)	97	05/1997 → 05/2001		1,4	12	063521081760	**MSN2079**
2.0 HDI 90	RHY (DW10TD)	66	06/1999 → 05/2001		1,4	12	063521084000	**MSN2083**
2.0 S16	RFT (XU10J4)	110	06/1994 → 05/2001		1,0	12	063521120410	**MSN2029**
2.0 S16	RFY (XU10J4Z)	112	06/1994 → 05/2001		1,0	12	063521120410	**MSN2029**
2.0 ST	RFX (XU10J2)	89	07/1994 → 04/1997		1,1	12	063521070630	**MSN2015**
2.0 ST	RFX (XU10J2)	89	07/1994 → 04/1997		1,4	12	063521081760	**MSN2079**
306 2 volumi /Coda spiovente (7A, 7C, N3, N5)								
1.1	HDZ (TU1M)	44	05/1993 → 04/1997		1,0	12	063521120410	**MSN2029**
1.4	KDX (TU3MC), KFW (TU3JP), KFX (TU3JP)	55	05/1993 → 04/1997		1,0	12	063521120410	**MSN2029**

		kW			kW	V	LONG	SHORT
PEUGEOT								
306 2 volumi /Coda spiovente (7A, 7C, N3, N5)								
1.6	NFT	72	10/2000 → 05/2001		1,0	12	063521120410	**MSN2029**
1.6	NFZ (TU5JP)	65	05/1993 → 04/1997		1,0	12	063521120410	**MSN2029**
1.8	LFZ (XU7JP)	74	05/1993 → 04/1997		1,1	12	063521070630	**MSN2015**
1.8	LFZ (XU7JP)	74	05/1993 → 04/1997		1,4	12	063521081760	**MSN2079**
1.8 16V	LFY (XU7JP4)	81	05/1997 → 05/2001		1,1	12	063521070630	**MSN2015**
1.8 16V	LFY (XU7JP4)	81	05/1997 → 05/2001		1,4	12	063521081760	**MSN2079**
1.9 D	WJY (DW8B), WJZ (DW8)	51	09/1998 → 05/2001		1,4	12	063521084000	**MSN2083**
2.0 16V	RFV (XU10J4R)	97	05/1997 → 05/2001		1,1	12	063521070630	**MSN2015**
2.0 16V	RFV (XU10J4R)	97	05/1997 → 05/2001		1,4	12	063521081760	**MSN2079**
2.0 HDI 90	RHY (DW10TD)	66	06/1999 → 05/2001		1,4	12	063521084000	**MSN2083**
2.0 XSi	RFX (XU10J2)	89	08/1993 → 04/1997		1,1	12	063521070630	**MSN2015**
2.0 XSi	RFX (XU10J2)	89	08/1993 → 04/1997		1,4	12	063521081760	**MSN2079**
306 Break (7E, N3, N5)								
1.4	KFW (TU3JP), KFX (TU3JP)	55	05/1997 → 03/2002		1,0	12	063521120410	**MSN2029**
1.6	NFT	72	10/2000 → 03/2002		1,0	12	063521120410	**MSN2029**
1.6	NFZ (TU5JP)	65	05/1997 → 10/2000		1,0	12	063521120410	**MSN2029**
1.8	LFZ (XU7JP)	74	05/1997 → 03/2002		1,1	12	063521070630	**MSN2015**
1.8	LFZ (XU7JP)	74	05/1997 → 03/2002		1,4	12	063521081760	**MSN2079**
1.8 16V	LFY (XU7JP4)	81	05/1997 → 03/2002		1,1	12	063521070630	**MSN2015**
1.8 16V	LFY (XU7JP4)	81	05/1997 → 03/2002		1,4	12	063521081760	**MSN2079**
1.9 D	WJY (DW8B), WJZ (DW8)	51	09/1998 → 03/2002		1,4	12	063521084000	**MSN2083**
2.0 HDI 90	RHY (DW10TD)	66	06/1999 → 03/2002		1,4	12	063521084000	**MSN2083**
306 Cabriolet (7D, N3, N5)								
1.6	NFT	72	10/2000 → 04/2002		1,0	12	063521120410	**MSN2029**
1.6	NFZ (TU5JP)	65	04/1996 → 10/2000		1,0	12	063521120410	**MSN2029**
1.8	LFZ (XU7JP)	74	03/1994 → 04/1997		1,1	12	063521070630	**MSN2015**
1.8	LFZ (XU7JP)	74	03/1994 → 04/1997		1,4	12	063521081760	**MSN2079**
1.8 16V	LFY (XU7JP4)	81	07/2000 → 04/2002		1,1	12	063521070630	**MSN2015**
1.8 16V	LFY (XU7JP4)	81	07/2000 → 04/2002		1,4	12	063521081760	**MSN2079**
2.0	RFX (XU10J2)	89	03/1994 → 04/1997		1,1	12	063521070630	**MSN2015**
2.0	RFX (XU10J2)	89	03/1994 → 04/1997		1,4	12	063521081760	**MSN2079**
2.0 16V	RFV (XU10J4R)	97	05/1997 → 04/2002		1,1	12	063521070630	**MSN2015**
2.0 16V	RFV (XU10J4R)	97	05/1997 → 04/2002		1,4	12	063521081760	**MSN2079**
307 (3A/C)								
1.4	KFW (TU3JP)	55	08/2000 →		1,0	12	063521120410	**MSN2029**
1.4 16V	KFU (ET3J4)	65	11/2003 →		1,0	12	063521120410	**MSN2029**
1.6 16V	NFU (TU5JP4)	80	08/2000 →		1,0	12	063521120410	**MSN2029**
2.0 16V	RFJ (EW10A)	103	06/2005 → 08/2007		1,4	12	063521084000	**MSN2083**
2.0 16V	RFK (EW10J4S)	130	06/2005 → 12/2006		1,4	12	063521084000	**MSN2083**
2.0 16V	RFN (EW10J4)	100	08/2000 → 05/2005		1,4	12	063521084000	**MSN2083**
2.0 HDi 110	RHS (DW10ATED)	79	01/2004 →		2,0	12	063280090010	**MSN8090**
2.0 HDi 110	RHS (DW10ATED)	79	03/2002 → 05/2005		1,4	12	063521084000	**MSN2083**
2.0 HDi 135	RHR (DW10BTED4)	100	10/2003 →		2,0	12	063280090010	**MSN8090**

		kW			kW	V	LONG	SHORT
PEUGEOT								
307 (3A/C)								
2.0 HDi 135	RHR (DW10BTED4)	100	10/2003 → 05/2005		1,4	12	063521084000	**MSN2083**
2.0 HDi 90	RHY (DW10TD)	66	01/2004 →		2,0	12	063280090010	**MSN8090**
2.0 HDi 90	RHY (DW10TD)	66	08/2000 → 05/2005		1,4	12	063521084000	**MSN2083**
307 Break (3E)								
1.4	TU 3 JP	55	04/2002 → 09/2003		1,0	12	063521120410	**MSN2029**
1.6 16V	NFU (TU5JP4)	80	03/2002 → 05/2005		1,0	12	063521120410	**MSN2029**
2.0	RFN (EW10J4)	100	03/2002 → 05/2005		1,4	12	063521084000	**MSN2083**
2.0 16V	RFJ (EW10A)	103	06/2005 → 05/2008		1,4	12	063521084000	**MSN2083**
2.0 HDI 110	RHS (DW10ATED)	79	01/2004 →		2,0	12	063280090010	**MSN8090**
2.0 HDI 110	RHS (DW10ATED)	79	03/2002 → 05/2005		1,4	12	063521084000	**MSN2083**
2.0 HDi 135	RHR (DW10BTED4)	100	02/2004 →		2,0	12	063280090010	**MSN8090**
2.0 HDi 135	RHR (DW10BTED4)	100	02/2004 → 05/2005		1,4	12	063521084000	**MSN2083**
2.0 HDI 90	RHY (DW10TD)	66	01/2004 →		2,0	12	063280090010	**MSN8090**
2.0 HDI 90	RHY (DW10TD)	66	03/2002 → 05/2005		1,4	12	063521084000	**MSN2083**
307 CC (3B)								
2.0 16V	RFJ (EW10A)	103	06/2005 → 03/2009		1,4	12	063521084000	**MSN2083**
2.0 16V	RFK (EW10J4S)	130	06/2005 →		1,4	12	063521084000	**MSN2083**
2.0 16V	RFN (EW10J4)	100	10/2003 → 05/2005		1,4	12	063521084000	**MSN2083**
2.0 HDi 135	RHR (DW10BTED4)	100	06/2005 →		2,0	12	063280090010	**MSN8090**
307 SW (3H)								
1.6 16V	NFU (TU5JP4)	80	03/2002 →		1,0	12	063521120410	**MSN2029**
2.0 16V	RFJ (EW10A)	103	06/2005 → 05/2008		1,4	12	063521084000	**MSN2083**
2.0 16V	RFN (EW10J4)	100	03/2002 → 05/2005		1,4	12	063521084000	**MSN2083**
2.0 HDI 110	RHS (DW10ATED)	79	01/2004 →		2,0	12	063280090010	**MSN8090**
2.0 HDI 110	RHS (DW10ATED)	79	03/2002 → 05/2005		1,4	12	063521084000	**MSN2083**
2.0 HDi 135	RHR (DW10BTED4)	100	02/2004 →		2,0	12	063280090010	**MSN8090**
2.0 HDi 135	RHR (DW10BTED4)	100	02/2004 → 05/2005		1,4	12	063521084000	**MSN2083**
2.0 HDI 90	RHY (DW10TD)	66	01/2004 →		2,0	12	063280090010	**MSN8090**
2.0 HDI 90	RHY (DW10TD)	66	03/2002 → 05/2005		1,4	12	063521084000	**MSN2083**
309 II (3C, 3A)								
1.1	H1B (TU1)	40	01/1992 → 10/1993		1,0	12	063521120410	**MSN2029**
1.1	HDZ (TU1M)	44	10/1990 → 12/1993		1,0	12	063521120410	**MSN2029**
1.4	K1D (TU3A)	49	07/1990 → 12/1993		1,0	12	063521120410	**MSN2029**
1.4	KDY (TU3M), KDZ (TU3M)	55	01/1992 → 12/1993		1,0	12	063521120410	**MSN2029**
405 I (15B)								
1.4	TU 3	47	07/1987 → 06/1988		1,0	12	063521120410	**MSN2029**
1.6	B1E (XU51C)	53	07/1987 → 12/1992		1,1	12	063521070630	**MSN2015**
1.6	B1E (XU51C), BAZ (XU5CP)	55	07/1987 → 06/1988		1,1	12	063521070630	**MSN2015**
1.6	B2A (XU52C/K)	69	07/1987 → 09/1992		1,1	12	063521070630	**MSN2015**
1.6	BDY (XU5M2Z), BDZ (XU5M)	65	09/1990 → 12/1992		1,1	12	063521070630	**MSN2015**
1.6	BDZ (XU5M)	66	10/1989 → 09/1990		1,1	12	063521070630	**MSN2015**

		kW			kW	V	LONG	SHORT
PEUGEOT								
405 I (15B)								
1.9	D2C (XU92C (U-KAT))	70	07/1987 → 12/1992		1,1	12	063521070630	**MSN2015**
1.9	D6A (XU9J2)	90	01/1989 → 12/1992		1,1	12	063521070630	**MSN2015**
1.9		93	07/1987 → 12/1992		1,1	12	063521070630	**MSN2015**
1.9 4x4		93	07/1990 → 07/1992		1,1	12	063521070630	**MSN2015**
405 I Break (15E)								
1.4	TU 3	47	06/1991 → 07/1992		1,0	12	063521120410	**MSN2029**
1.6	B1E (XU51C)	53	10/1988 → 08/1992		1,1	12	063521070630	**MSN2015**
1.6	B2A (XU52C/K)	68	06/1992 → 07/1992		1,1	12	063521070630	**MSN2015**
1.6	B2A (XU52C/K)	68	06/1992 → 07/1992		1,4	12	063521081760	**MSN2079**
1.6	BDY (XU5M2Z), BDY (XU5M3Z), BDZ (XU5M)	65	07/1989 → 08/1992		1,1	12	063521070630	**MSN2015**
1.6	BDZ (XU5M)	66	10/1988 → 08/1992		1,1	12	063521070630	**MSN2015**
1.6		69	10/1988 → 08/1992		1,1	12	063521070630	**MSN2015**
1.6 SRi 4x4	BDZ (XU5M)	65	04/1988 → 07/1992		1,1	12	063521070630	**MSN2015**
1.9	D2C (XU92C (U-KAT))	70	10/1988 → 08/1992		1,1	12	063521070630	**MSN2015**
1.9	DFZ (XU9J1)	72	07/1988 → 07/1992		1,1	12	063521070630	**MSN2015**
405 II (4B)								
1.4	KDX (TU3MC)	55	08/1992 → 10/1995		1,0	12	063521120410	**MSN2029**
1.6	BDY (XU5M2Z), BDY (XU5M3Z), BDZ (XU5M), BFZ (XU5JP)	65	08/1992 → 10/1995		1,1	12	063521070630	**MSN2015**
1.6	BDY (XU5M2Z), BDY (XU5M3Z), BDZ (XU5M), BFZ (XU5JP)	65	08/1992 → 10/1995		1,4	12	063521081760	**MSN2079**
1.8	LFZ (XU7JP)	74	08/1992 → 10/1995		1,1	12	063521070630	**MSN2015**
1.8	LFZ (XU7JP)	74	08/1992 → 10/1995		1,4	12	063521081760	**MSN2079**
2.0	RFX (XU10J2)	89	08/1992 → 10/1995		1,1	12	063521070630	**MSN2015**
2.0	RFX (XU10J2)	89	08/1992 → 10/1995		1,4	12	063521081760	**MSN2079**
2.0 X4	RFX (XU10J2)	89	08/1992 → 10/1995		1,1	12	063521070630	**MSN2015**
2.0 X4	RFX (XU10J2)	89	08/1992 → 10/1995		1,4	12	063521081760	**MSN2079**
405 II Break (4E)								
1.4	KDX (TU3MC)	55	08/1992 → 10/1996		1,0	12	063521120410	**MSN2029**
1.6	BDY (XU5M2Z), BDY (XU5M3Z), BDZ (XU5M), BFZ (XU5JP)	65	08/1992 → 10/1996		1,1	12	063521070630	**MSN2015**
1.6	BDY (XU5M2Z), BDY (XU5M3Z), BDZ (XU5M), BFZ (XU5JP)	65	08/1992 → 10/1996		1,4	12	063521081760	**MSN2079**
1.8	LFZ (XU7JP)	74	08/1992 → 10/1996		1,1	12	063521070630	**MSN2015**
1.8	LFZ (XU7JP)	74	08/1992 → 10/1996		1,4	12	063521081760	**MSN2079**
2.0	RFX (XU10J2)	89	08/1992 → 10/1996		1,1	12	063521070630	**MSN2015**
2.0	RFX (XU10J2)	89	08/1992 → 10/1996		1,4	12	063521081760	**MSN2079**
2.0 4x4	RFX (XU10J2)	89	08/1992 → 10/1996		1,1	12	063521070630	**MSN2015**
2.0 4x4	RFX (XU10J2)	89	08/1992 → 10/1996		1,4	12	063521081760	**MSN2079**

		kW			kW	V	LONG	SHORT
PEUGEOT								
406 (8B)								
1.6	BFZ (XU5JP)	65	11/1995 → 05/2004		1,1	12	063521070630	**MSN2015**
1.6	BFZ (XU5JP)	65	11/1995 → 05/2004		1,4	12	063521081760	**MSN2079**
1.8		66	09/1997 → 05/2004		1,1	12	063521070630	**MSN2015**
1.8		66	09/1997 → 05/2004		1,4	12	063521081760	**MSN2079**
1.8 16V	6FZ (EW7J4)	85	10/2000 → 05/2004		1,4	12	063521084000	**MSN2083**
1.8 16V	LFY (XU7JP4)	81	11/1995 → 10/2000		1,1	12	063521070630	**MSN2015**
1.8 16V	LFY (XU7JP4)	81	11/1995 → 10/2000		1,4	12	063521081760	**MSN2079**
2.0 16V	RFN (EW10J4)	100	08/2000 → 05/2004		1,4	12	063521084000	**MSN2083**
2.0 16V	RFR (DEW10J4)	99	04/1999 → 08/2000		1,4	12	063521084000	**MSN2083**
2.0 16V	RFV (XU10J4R)	97	11/1995 → 05/2004		1,1	12	063521070630	**MSN2015**
2.0 16V	RFV (XU10J4R)	97	11/1995 → 05/2004		1,4	12	063521081760	**MSN2079**
2.0 16V HPi	RLZ (EW10D)	103	05/2001 → 05/2004		1,4	12	063521084000	**MSN2083**
2.0 Turbo	RGX (XU10J2TE)	108	04/1996 → 03/1999		1,1	12	063521070630	**MSN2015**
2.0 Turbo	RGX (XU10J2TE)	108	04/1996 → 03/1999		1,4	12	063521081760	**MSN2079**
2.2	3FZ (EW12J4)	116	07/2000 → 05/2004		1,4	12	063521084000	**MSN2083**
406 Break (8E/F)								
1.8	LFX (XU7JB)	66	09/1997 → 10/2004		1,1	12	063521070630	**MSN2015**
1.8	LFX (XU7JB)	66	09/1997 → 06/2004		1,4	12	063521081760	**MSN2079**
1.8 16V	6FZ (EW7J4)	85	10/2000 → 06/2004		1,4	12	063521084000	**MSN2083**
1.8 16V	LFY (XU7JP4)	81	10/1996 → 10/2000		1,1	12	063521070630	**MSN2015**
1.8 16V	LFY (XU7JP4)	81	10/1996 → 10/2000		1,4	12	063521081760	**MSN2079**
2.0 16V	RFN (EW10J4)	100	10/2000 → 06/2004		1,4	12	063521084000	**MSN2083**
2.0 16V	RFR (DEW10J4)	99	04/1999 → 10/2000		1,4	12	063521084000	**MSN2083**
2.0 16V	RFV (XU10J4R)	97	10/1996 → 10/2004		1,1	12	063521070630	**MSN2015**
2.0 16V	RFV (XU10J4R)	97	10/1996 → 06/2004		1,4	12	063521081760	**MSN2079**
2.0 16V HPi	RLZ (EW10D)	103	05/2001 → 06/2004		1,4	12	063521084000	**MSN2083**
2.0 Turbo	RGX (XU10J2TE)	108	10/1996 → 03/1999		1,1	12	063521070630	**MSN2015**
2.0 Turbo	RGX (XU10J2TE)	108	10/1996 → 03/1999		1,4	12	063521081760	**MSN2079**
2.2	3FZ (EW12J4)	116	07/2000 → 06/2004		1,4	12	063521084000	**MSN2083**
406 Coupe (8C)								
2.0 16V	RFN (EW10J4)	100	10/2000 → 12/2004		1,4	12	063521084000	**MSN2083**
2.0 16V	RFR (DEW10J4)	99	04/1999 → 10/2000		1,4	12	063521084000	**MSN2083**
2.0 16V	RFV (XU10J4R)	97	03/1997 → 12/2004		1,1	12	063521070630	**MSN2015**
2.0 16V	RFV (XU10J4R)	97	03/1997 → 12/2004		1,4	12	063521081760	**MSN2079**
2.2	3FZ (EW12J4)	116	03/2002 → 12/2004		1,4	12	063521084000	**MSN2083**
2.2 HDI	4HX (DW12TED4/FAP)	98	03/2000 → 12/2004		2,0	12	063280090010	**MSN8090**
407 (6D_)								
1.8	6FZ (EW7J4)	85	05/2004 → 10/2005		1,4	12	063521084000	**MSN2083**
1.8 16V	6FY (EW7A)	92	10/2005 →		1,4	12	063521084000	**MSN2083**
2.0	RFN (EW10J4)	100	05/2004 →		1,4	12	063521084000	**MSN2083**
2.0 16V	RFJ (EW10A)	103	10/2005 →		1,4	12	063521084000	**MSN2083**
2.0 Bioflex	RFJ (EW10A)	103	09/2007 →		1,4	12	063521084000	**MSN2083**
2.0 HDi 135	RHR (DW10BTED4)	100	05/2004 →		2,0	12	063280090010	**MSN8090**
2.2	3FZ (EW12J4)	116	05/2004 →		1,4	12	063521084000	**MSN2083**

		kW			kW	V	LONG	SHORT
PEUGEOT								
407 (6D_)								
2.2 16V	3FY (EW12J4)	120	10/2005 →		1,4	12	063521084000	**MSN2083**
407 Coupe (6C_)								
2.2 16V	3FY (EW12J4)	120	10/2005 →		1,4	12	063521084000	**MSN2083**
407 SW (6E_)								
1.8	6FZ (EW7J4)	85	04/2005 →		1,4	12	063521084000	**MSN2083**
1.8 16V	6FY (EW7A)	92	10/2005 →		1,4	12	063521084000	**MSN2083**
2.0	RFN (EW10J4)	100	04/2005 →		1,4	12	063521084000	**MSN2083**
2.0 16V	RFJ (EW10A)	103	10/2005 →		1,4	12	063521084000	**MSN2083**
2.0 Bioflex	RFJ (EW10A)	103	01/2008 →		1,4	12	063521084000	**MSN2083**
2.0 HDi 135	RHR (DW10BTED4)	100	05/2004 →		2,0	12	063280090010	**MSN8090**
2.2	3FZ (EW12J4)	116	04/2005 →		1,4	12	063521084000	**MSN2083**
2.2 16V	3FY (EW12J4)	120	10/2005 →		1,4	12	063521084000	**MSN2083**
508								
1.6 HDi		82	11/2010 →		1,1	12	063521070630	**MSN2015**
508 SW								
1.6 HDi		82	11/2010 →		1,1	12	063521070630	**MSN2015**
605 (6B)								
2.0	R5A (XU102C)	84	10/1989 → 06/1994		1,1	12	063521070630	**MSN2015**
2.0	R5A (XU102C)	84	10/1989 → 05/1999		1,4	12	063521081760	**MSN2079**
2.0	RFZ (XU10J2Z)	89	06/1989 → 06/1994		1,1	12	063521070630	**MSN2015**
2.0	RFZ (XU10J2Z)	89	06/1989 → 06/1994		1,4	12	063521081760	**MSN2079**
2.0		79	02/1990 → 05/1999		1,1	12	063521070630	**MSN2015**
2.0		79	02/1990 → 05/1999		1,4	12	063521081760	**MSN2079**
2.0 16V	RFV (XU10J4R)	97	07/1994 → 05/1999		1,1	12	063521070630	**MSN2015**
2.0 16V	RFV (XU10J4R)	97	07/1994 → 05/1999		1,4	12	063521081760	**MSN2079**
2.0 Turbo	RGX (XU10J2TE)	108	07/1994 → 05/1999		1,1	12	063521070630	**MSN2015**
2.0 Turbo	RGX (XU10J2TE)	108	07/1994 → 05/1999		1,4	12	063521081760	**MSN2079**
2.0 Turbo	RGY (XU10J2TE)	104	07/1992 → 06/1994		1,1	12	063521070630	**MSN2015**
2.0 Turbo	RGY (XU10J2TE)	104	07/1992 → 06/1994		1,4	12	063521081760	**MSN2079**
2.5 Turbo Diesel	THY (DK5ATE)	95	07/1994 → 09/1999		2,0	12	063280090010	**MSN8090**
607 (9D, 9U)								
2.0	RFN (EW10J4)	100	03/2000 → 11/2004		1,4	12	063521084000	**MSN2083**
2.0 HDI	RHR (DW10BTED4)	100	09/2005 →		2,0	12	063280090010	**MSN8090**
2.0 HDi	RHS (DW10ATED)	79	01/2004 → 07/2004		2,0	12	063280090010	**MSN8090**
2.0 HDI	RHZ (DW10ATED)	80	01/2004 →		2,0	12	063280090010	**MSN8090**
2.2 16V	3FY (EW12J4)	120	09/2005 → 12/2007		1,4	12	063521084000	**MSN2083**
2.2 16V	3FZ (EW12J4)	116	02/2000 →		1,4	12	063521084000	**MSN2083**
2.2 HDI	4HX (DW12TED4/FAP)	98	02/2000 → 11/2004		2,0	12	063280090010	**MSN8090**
806 (221)								
1.8	LFW (XU7JP)	73	07/1995 → 08/2002		1,1	12	063521070630	**MSN2015**
1.8	LFW (XU7JP)	73	07/1995 → 08/2002		1,4	12	063521081760	**MSN2079**
2.0	RFU (XU10J2)	89	06/1994 → 08/2002		1,1	12	063521070630	**MSN2015**
2.0	RFU (XU10J2)	89	06/1994 → 08/2002		1,4	12	063521081760	**MSN2079**
2.0 16V	RFN (EW10J4)	100	09/2000 → 08/2002		1,4	12	063521084000	**MSN2083**

		kW			kW	V	LONG	SHORT
PEUGEOT								
806 (221)								
2.0 16V	RFV (XU10J4R)	97	05/1998 → 09/2000		1,1	12	063521070630	**MSN2015**
2.0 16V	RFV (XU10J4R)	97	05/1998 → 09/2000		1,4	12	063521081760	**MSN2079**
2.0 Turbo	RGX (XU10J2TE)	108	06/1994 → 08/2002		1,1	12	063521070630	**MSN2015**
2.0 Turbo	RGX (XU10J2TE)	108	06/1994 → 08/2002		1,4	12	063521081760	**MSN2079**
807 (E)								
2.0	RFN (EW10J4)	100	06/2002 → 05/2006		1,4	12	063521084000	**MSN2083**
2.0 16V	RFJ (EW10A)	103	10/2005 →		1,4	12	063521084000	**MSN2083**
2.0 HDi	RHK (DW10UTED4)	88	11/2006 →		2,0	12	063280090010	**MSN8090**
2.0 HDi	RHK (DW10UTED4), RHM (DW10ATED4), RHT (DW10ATED4), RHW (DW10ATED4)	79	01/2004 →		2,0	12	063280090010	**MSN8090**
2.0 HDI	RHR (DW10BTED4)	100	06/2006 →		2,0	12	063280090010	**MSN8090**
2.0 HDi		80	04/2004 → 05/2006		2,0	12	063280090010	**MSN8090**
2.2	3FZ (EW12J4)	116	06/2002 → 05/2006		1,4	12	063521084000	**MSN2083**
2.2 HDi	4HX (DW12TED4/FAP)	94	06/2002 →		2,0	12	063280090010	**MSN8090**
BOXER Autobus (230P)								
2.0 i	RFW (XU10J2)	80	03/1994 → 02/2002		1,1	12	063521070630	**MSN2015**
2.0 i	RFW (XU10J2)	80	03/1994 → 02/2002		1,4	12	063521081760	**MSN2079**
2.0 i 4x4	RFW (XU10J2)	80	08/1996 → 02/2002		1,1	12	063521070630	**MSN2015**
2.0 i 4x4	RFW (XU10J2)	80	08/1996 → 02/2002		1,4	12	063521081760	**MSN2079**
2.8 HDI	8140.43S (F28DTCR)	94	11/2000 → 02/2002		2,3	12	063522230130	**MSN2006**
2.8 HDi	8140.43S (F28DTCR)	93	10/2000 → 11/2001		2,3	12	063522230130	**MSN2006**
2.8 HDi 4 ruote motrici	8140.43S (F28DTCR)	93	10/2000 → 11/2001		2,3	12	063522230130	**MSN2006**
2.8 HDi 4x4	8140.43S (F28DTCR)	94	10/2000 → 02/2002		2,3	12	063522230130	**MSN2006**
BOXER Autobus (244, Z_)								
2.0	RFL (XU10J2U)	81	04/2002 → 05/2006		1,1	12	063521070630	**MSN2015**
2.0	RFL (XU10J2U)	81	04/2002 → 05/2006		1,4	12	063521081760	**MSN2079**
2.0 HDi	RHV (DW10TD), RHV (DW10UTD)	62	04/2002 →		2,0	12	063280090010	**MSN8090**
2.2 HDi	4HY (DW12UTED)	74	04/2002 →		2,0	12	063280090010	**MSN8090**
2.8 HDi	8140.43N	107	08/2004 → 05/2006		2,5	12	063521093000	**MSN2026**
2.8 HDi	8140.43N	107	08/2004 → 05/2006		2,3	12	063522230130	**MSN2006**
2.8 HDi	8140.43S (F28DTCR)	94	04/2002 → 05/2006		2,5	12	063521093000	**MSN2026**
2.8 HDi	8140.43S (F28DTCR)	94	04/2002 → 05/2006		2,3	12	063522230130	**MSN2006**
2.8 HDi 4x4	8140.43S (F28DTCR)	94	04/2002 → 05/2006		2,5	12	063521093000	**MSN2026**
2.8 HDi 4x4	8140.43S (F28DTCR)	94	04/2002 → 05/2006		2,3	12	063522230130	**MSN2006**
BOXER Furgonato (230L)								
2.0 i	RFW (XU10J2)	80	06/1994 → 02/2002		1,1	12	063521070630	**MSN2015**
2.0 i	RFW (XU10J2)	80	06/1994 → 02/2002		1,4	12	063521081760	**MSN2079**
2.8 HDi	8140.43S (F28DTCR)	93	10/2000 → 11/2001		2,3	12	063522230130	**MSN2006**
2.8 HDI	8140.43S (F28DTCR)	94	11/2000 → 02/2002		2,3	12	063522230130	**MSN2006**
2.8 HDi 4x4	8140.43S (F28DTCR)	94	10/2000 → 02/2002		2,3	12	063522230130	**MSN2006**
2.8 HDi 4x4		93	10/2000 → 11/2001		2,3	12	063522230130	**MSN2006**
BOXER Furgonato (244)								
2.0	RFL (XU10J2U)	81	04/2002 → 05/2006		1,1	12	063521070630	**MSN2015**

		kW			kW	V	LONG	SHORT
PEUGEOT								
BOXER Furgonato (244)								
2.0	RFL (XU10J2U)	81	04/2002 → 05/2006		1,4	12	063521081760	**MSN2079**
2.0 HDi	RHV (DW10TD), RHV (DW10UTD)	62	04/2002 →		2,0	12	063280090010	**MSN8090**
2.2 HDi	4HY (DW12UTED)	74	04/2002 →		2,0	12	063280090010	**MSN8090**
2.8 HDi	8140.43N	107	08/2004 →		2,5	12	063521093000	**MSN2026**
2.8 HDi	8140.43N	107	08/2004 → 05/2006		2,3	12	063522230130	**MSN2006**
2.8 HDi	8140.43S (F28DTCR)	94	04/2002 → 05/2006		2,5	12	063521093000	**MSN2026**
2.8 HDi	8140.43S (F28DTCR)	94	04/2002 → 05/2006		2,3	12	063522230130	**MSN2006**
2.8 HDi 4x4	8140.43S (F28DTCR)	94	04/2002 → 05/2006		2,5	12	063521093000	**MSN2026**
2.8 HDi 4x4	8140.43S (F28DTCR)	94	04/2002 → 05/2006		2,3	12	063522230130	**MSN2006**
BOXER Pianale piatto/Telaio (244)								
2.0 HDi	RHV (DW10TD), RHV (DW10UTD)	62	04/2002 →		2,0	12	063280090010	**MSN8090**
2.2 HDi	4HY (DW12UTED)	74	04/2002 →		2,0	12	063280090010	**MSN8090**
2.8 HDi	8140.43N	107	04/2004 →		2,5	12	063521093000	**MSN2026**
2.8 HDi	8140.43N	107	08/2004 → 05/2006		2,3	12	063522230130	**MSN2006**
2.8 HDi	8140.43S (F28DTCR)	94	04/2002 → 05/2006		2,5	12	063521093000	**MSN2026**
2.8 HDi	8140.43S (F28DTCR)	94	04/2002 → 05/2006		2,3	12	063522230130	**MSN2006**
2.8 HDi 4x4	8140.43S (F28DTCR)	94	04/2002 → 05/2006		2,5	12	063521093000	**MSN2026**
2.8 HDi 4x4	8140.43S (F28DTCR)	94	04/2002 → 05/2006		2,3	12	063522230130	**MSN2006**
BOXER Pianale piatto/Telaio (ZCT_)								
2.0		81	02/2002 → 05/2006		1,1	12	063521070630	**MSN2015**
2.0		81	02/2002 → 05/2006		1,4	12	063521081760	**MSN2079**
2.0 i	RFW (XU10J2)	80	06/1994 → 02/2002		1,1	12	063521070630	**MSN2015**
2.0 i	RFW (XU10J2)	80	06/1994 → 02/2002		1,4	12	063521081760	**MSN2079**
2.8 HDi	8140.43S (F28DTCR)	93	10/2000 → 11/2001		2,3	12	063522230130	**MSN2006**
2.8 HDI	8140.43S (F28DTCR)	94	11/2000 → 02/2002		2,3	12	063522230130	**MSN2006**
2.8 HDi 4 ruote motrici	8140.43S (F28DTCR)	93	10/2000 → 11/2001		2,3	12	063522230130	**MSN2006**
EXPERT (224)								
1.8	LFZ (XU7JP)	74	10/1996 → 09/2000		1,1	12	063521070630	**MSN2015**
1.9 D	WJY (DW8B), WJZ (DW8)	51	12/2003 → 01/2007		1,4	12	063521084000	**MSN2083**
2.0	RFN (EW10J4)	100	07/2000 → 01/2007		1,4	12	063521084000	**MSN2083**
2.0 HDI	RHW (DW10ATED4)	80	07/2000 →		1,4	12	063521084000	**MSN2083**
2.0 HDi	RHX (DW10BTED)	69	10/2000 → 11/2003		1,4	12	063521084000	**MSN2083**
2.0 HDI	RHZ (DW10ATED)	80	07/2000 → 01/2007		1,4	12	063521084000	**MSN2083**
EXPERT Furgonato (222)								
1.8	LFZ (XU7JP)	74	10/1996 → 09/2000		1,1	12	063521070630	**MSN2015**
1.9 D 70	WJY (DW8B), WJZ (DW8)	51	12/1998 →		1,4	12	063521084000	**MSN2083**
2.0	RFN (EW10J4)	100	09/2002 → 01/2007		1,4	12	063521084000	**MSN2083**
2.0 HDI	RHW (DW10ATED4)	80	07/2000 →		1,4	12	063521084000	**MSN2083**
2.0 HDI	RHX (DW10BTED)	69	07/2000 → 01/2007		1,4	12	063521084000	**MSN2083**
2.0 HDI	RHZ (DW10ATED)	80	07/2000 → 01/2007		1,4	12	063521084000	**MSN2083**
EXPERT Furgonato (VF3A_, VF3U_, VF3X_)								
2.0 HDi 120	RHK (DW10UTED4)	88	01/2007 →		2,0	12	063280090010	**MSN8090**

		kW		i	kW	V	LONG	SHORT
PEUGEOT								
EXPERT Furgonato (VF3A_, VF3U_, VF3X_)								
2.0 HDi 140	RHR (DW10BTED4)	100	01/2007 →		2,0	12	063280090010	**MSN8090**
EXPERT Pianale piatto/Telaio								
2.0 HDi 120	RHK (DW10UTED4)	88	01/2007 →		2,0	12	063280090010	**MSN8090**
2.0 HDi 140	RHR (DW10BTED4)	100	01/2007 →		2,0	12	063280090010	**MSN8090**
EXPERT Pianale piatto/Telaio (223)								
1.9 D	WJY (DW8B), WJZ (DW8)	51	06/1998 → 11/2003		1,4	12	063521084000	**MSN2083**
2.0 HDi		80	10/2000 → 11/2003		1,4	12	063521084000	**MSN2083**
EXPERT Tepee (VF3V_)								
2.0 HDi 120	RHK (DW10UTED4)	88	01/2007 →		2,0	12	063280090010	**MSN8090**
2.0 HDi 140	RHR (DW10BTED4)	100	01/2007 →		2,0	12	063280090010	**MSN8090**
J9 Autobus								
2.5 D	XD3P	53	08/1982 → 12/1983		2,5	12	063207151010	**MSN875**
J9 Furgonato								
2.1 D	XDPX90	41	10/1983 → 06/1987		2,5	12	063207151010	**MSN875**
2.5 D	XD3P	53	07/1982 → 06/1987		2,5	12	063207151010	**MSN875**
J9 Pianale piatto/Telaio								
2.5 D	XD3P	53	07/1982 → 12/1983		2,5	12	063207151010	**MSN875**
PARTNER Combispace (5F)								
1.1	HDZ (TU1M), HFX (TU1JP)	44	07/1996 → 08/2002		1,0	12	063521120410	**MSN2029**
1.4	KFW (TU3JP), KFX (TU3JP), TU32	55	07/1996 → 08/2002		1,0	12	063521120410	**MSN2029**
1.6 16V	NFU (TU5JP4)	80	07/2001 → 08/2002		1,0	12	063521120410	**MSN2029**
1.8	LFX (XU7JB)	66	05/1997 → 08/2002		1,1	12	063521070630	**MSN2015**
1.8	LFX (XU7JB)	66	05/1997 → 08/2002		1,4	12	063521081760	**MSN2079**
2.0 HDI	RHY (DW10TD)	66	02/2000 → 08/2002		1,4	12	063521084000	**MSN2083**
PARTNER Furgonato (5)								
1.1	HDZ (TU1M)	44	07/1996 → 08/2002		1,0	12	063521120410	**MSN2029**
1.4	KFX (TU3JP), TU32	55	07/1996 → 08/2002		1,0	12	063521120410	**MSN2029**
1.6		80	09/2000 → 08/2002		1,0	12	063521120410	**MSN2029**
1.8	LFX (XU7JB)	66	03/1997 → 08/2000		1,1	12	063521070630	**MSN2015**
1.8	LFX (XU7JB)	66	03/1997 → 08/2000		1,4	12	063521081760	**MSN2079**
1.9 D	WJY (DW8B), WJZ (DW8)	51	09/2000 →		1,4	12	063521084000	**MSN2083**
1.9 D 4x4	WJY (DW8B)	51	04/2004 →		1,4	12	063521084000	**MSN2083**
2.0 HDi	RHY (DW10TD)	66	04/2000 → 08/2002		1,4	12	063521084000	**MSN2083**
2.0 HDi 4x4	RHY (DW10TD)	66	04/2004		1,4	12	063521084000	**MSN2083**
RENAULT								
19 I (B/C53_)								
1.4	E6J 700, E6J 701	59	01/1988 → 12/1992		1,4	12	063521081800	**MSN2020**
1.8 16V (B/C53D)	F7P 704	99	06/1989 → 04/1992		1,4	12	063521081800	**MSN2020**
19 I Cabriolet (D53_)								
1.8 16V (D53D)	F7P 704	101	07/1991 → 04/1992		1,4	12	063521081800	**MSN2020**
19 I Chamade (L53_)								
1.8 16V (L53D)	F7P 704	99	10/1989 → 04/1992		1,4	12	063521081800	**MSN2020**
19 II (B/C53_)								
1.4	E6J 700, E7J 706	59	05/1992 → 12/1995		1,4	12	063521081800	**MSN2020**

		kW			kW	V	LONG	SHORT
RENAULT								
19 II (B/C53_)								
1.4 (B/C535)	E7J 742	55	01/1992 → 12/1995		1,4	12	063521081800	**MSN2020**
1.8 (5/353F, B/C538)	F3P 682, F3P 765	79	05/1994 → 12/1995		1,4	12	063521081800	**MSN2020**
1.8 16V (B/C53D)	F7P 704	99	04/1992 → 12/1995		1,4	12	063521081800	**MSN2020**
19 II Cabriolet (D53_, 853_)								
1.8 (853A)	F3P 706, F3P 760	66	09/1993 → 06/1996		1,4	12	063521081800	**MSN2020**
1.8 (D53V, 853F, D53C)	F3P 682, F3P 764, F3P 765	79	09/1994 → 12/1995		1,4	12	063521081800	**MSN2020**
1.8 (D53Y)	F3P 704, F3P 705, F3P 706, F3P 707, F3P 708, F3P 760	65	04/1992 → 06/1996		1,4	12	063521081800	**MSN2020**
1.8 16V (D53D)	F7P 704	99	04/1992 → 12/1995		1,4	12	063521081800	**MSN2020**
19 II Chamade (L53_)								
1.4 (L535)	E7J 742	55	11/1993 → 12/1995		1,4	12	063521081800	**MSN2020**
1.8 (453A/F)	F3P 706, F3P 760	66	04/1992 → 12/1995		1,4	12	063521081800	**MSN2020**
1.8 (L53V, L538)	F3P 682	79	09/1994 → 12/1995		1,4	12	063521081800	**MSN2020**
1.8 (L53Y)	F3P 704, F3P 705, F3P 706, F3P 707, F3P 708, F3P 760	65	04/1992 → 12/1995		1,4	12	063521081800	**MSN2020**
1.8 16V (L53D)	F7P 704	99	04/1992 → 12/1995		1,4	12	063521081800	**MSN2020**
19 II Furgonato (S53_)								
1.9 dT	F8Q 740	68	03/1992 → 12/1995		1,4	12	063521081800	**MSN2020**
CLIO I (B/C57_, 5/357_)								
1.2 (B/C/S572)	E5F 710	44	05/1990 → 03/1996		1,4	12	063521081800	**MSN2020**
1.8 16V (C57D)	F7P 722	99	08/1991 → 06/1994		1,4	12	063521081800	**MSN2020**
Williams (B/C57M)	F7R 700	108	01/1994 → 03/1996		1,4	12	063521081800	**MSN2020**
CLIO II Furgonato (SB0/1/2_)								
1.9 D (SB0E, SB0R)	F8Q 630, F8Q 662	47	09/1998 →		1,4	12	063521081800	**MSN2020**
LAGUNA (B56_, 556_)								
1.8	F3P 674	69	01/1996 → 02/2001		1,1	12	063521070470	**MSN2012**
1.8	F3P 676	70	05/1998 → 06/1998		1,1	12	063521070470	**MSN2012**
1.8	F3P 676	70	01/1996 → 06/1998		1,1	12	063521070470	**MSN2012**
1.8 (B56A/B)	F3P 720, F3P 724	66	01/1996 → 03/2001		1,1	12	063521070470	**MSN2012**
1.8 (B56S/T/0)	F3P 670, F3P 678	66	01/1996 → 03/2001		1,1	12	063521070470	**MSN2012**
1.8 (B56Z)	F3P 720, F3P 724	69	01/1996 → 03/2001		1,1	12	063521070470	**MSN2012**
2.0	F3R 611	80	03/1999 → 03/2001		1,4	12	063521081800	**MSN2020**
2.0 (B56C/H/N)	F3R 722, F3R 723	83	01/1994 → 02/2001		1,4	12	063521081800	**MSN2020**
LAGUNA Grandtour (K56_)								
2.0 (K56C/H)	F3R 722, F3R 723	83	09/1995 → 02/2001		1,4	12	063521081800	**MSN2020**
MASTER I Autobus (T__)								
28-35 2.4 D	8140.61.2300, S8U 731	52	09/1980 → 12/1984		3,5	12	063216851010	**MSN221**
28-35 2.5 D	8140.67.2510, S8U 742	55	08/1989 → 07/1998		3,5	12	063216851010	**MSN221**
MASTER I Furgonato (T__)								
2.4 D	S8U 730	52	07/1983 → 12/1984		3,5	12	063216851010	**MSN221**
2.4 D		50	09/1980 → 06/1983		3,5	12	063216851010	**MSN221**
28-35 2.4 D	8140.61.2300, S8U 731	52	09/1980 → 12/1984		3,5	12	063216851010	**MSN221**

		kW			kW	V	LONG	SHORT
RENAULT								
MASTER I Pianale piatto/Telaio (P__)								
28-35 2.5 D	8140.61.2300, S8U 731	52	09/1980 → 12/1984		3,5	12	063216851010	**MSN221**
MEGANE I (BA0/1_)								
2.0 16V (BA0H)	F7R 710, F7R 714	108	07/1996 → 09/2003		1,1	12	063521070470	**MSN2012**
2.0 i (BA0G)	F3R 750, F3R 751	84	09/1996 → 02/1999		1,1	12	063521070470	**MSN2012**
2.0 i (BA0G)	F3R 750, F3R 751	84	01/1996 → 03/1997		1,4	12	063521081800	**MSN2020**
MEGANE I Cabriolet (EA0/1_)								
2.0 (EA0G)	F3R 750	84	04/1997 → 09/2003		1,1	12	063521070470	**MSN2012**
2.0 16V (EA0H)	F7R 710, F7R 714	108	10/1996 → 11/1999		1,1	12	063521070470	**MSN2012**
MEGANE I Classic (LA0/1_)								
2.0 i (LA07, LA0G)	F3R 750, F3R 751	84	09/1996 → 04/1997		1,1	12	063521070470	**MSN2012**
MEGANE I Coach (DA0/1_)								
2.0 16V (DA0H)	F7R 710, F7R 714	108	03/1996 → 11/1999		1,1	12	063521070470	**MSN2012**
2.0 i (DA0G)	F3R 750, F3R 751	84	03/1996 → 03/1997		1,1	12	063521070470	**MSN2012**
MEGANE Scenic (JA0/1_)								
2.0 i (JA0G)	F3R 750, F3R 751	84	01/1997 → 09/1999		1,1	12	063521070470	**MSN2012**
2.0 i (JA0G)	F3R 750, F3R 751	84	01/1997 → 09/1999		1,4	12	063521081800	**MSN2020**
SPORT SPIDER (EF0_)								
2.0	F7R 710	108	05/1996 → 08/1996		1,1	12	063521070470	**MSN2012**
2.0 16V	F7R 710	110	05/1996 → 10/1999		1,1	12	063521070470	**MSN2012**
TRAFIC Autobus (TXW)								
1.9 D	F8Q 606	44	06/1997 → 03/2001		1,4	12	063521081800	**MSN2020**
TRAFIC Furgonato (TXX)								
1.9 D	F8Q 606	44	06/1997 → 03/2001		1,4	12	063521081800	**MSN2020**
TRAFIC Pianale piatto/Telaio (P6)								
2.5 D	8140.61.240, S8U 720, S8U 722	51	03/1980 → 04/1989		3,5	12	063216851010	**MSN221**
RENAULT TRUCKS								
B Cassone / Furgonato / Promiscuo								
70	8140.61.235	53	01/1983 → 10/1985		3,5	12	063216851010	**MSN221**
B Pianale piatto/Telaio								
70	8140.61.235	53	01/1983 → 10/1985		3,5	12	063216851010	**MSN221**
ROVER								
800 (XS)								
820 SI (XS)	20 HD M 16	98	10/1988 → 10/1991		0,8	12	063101023010	**MSN410**
800 2 volumi /Coda spiovente (XS)								
820 SI (XS)	20 HD M 16	98	10/1988 → 10/1991		0,8	12	063101023010	**MSN410**
SAAB								
900 II								
2.0 -16 Turbo	B204L	136	07/1993 → 02/1998		1,2	12	063522601010	**MSN2601**
2.0 i	B204I	96	08/1994 → 02/1998		1,2	12	063522601010	**MSN2601**
2.0 i	B206I	98	07/1993 → 07/1994		1,2	12	063522601010	**MSN2601**
2.3 -16	B234I	110	07/1993 → 02/1998		1,2	12	063522601010	**MSN2601**
900 II Cabriolet								
2.0 -16 Turbo	B204L	136	12/1993 → 02/1998		1,2	12	063522601010	**MSN2601**

		kW			kW	V	LONG	SHORT
SAAB								
900 II Cabriolet								
2.0 i	B204I	96	12/1993 → 02/1998		1,2	12	063522601010	**MSN2601**
2.3 -16	B234I	110	12/1993 → 02/1998		1,2	12	063522601010	**MSN2601**
900 II Coupe								
2.0 -16 Turbo	B204L	136	12/1993 → 02/1998		1,2	12	063522601010	**MSN2601**
2.0 i	B204I	96	08/1994 → 02/1998		1,2	12	063522601010	**MSN2601**
2.0 i	B206I	98	12/1993 → 07/1994		1,2	12	063522601010	**MSN2601**
2.3 -16	B234I	110	12/1993 → 02/1998		1,2	12	063522601010	**MSN2601**
9000								
2.0 -16 CD	B204E, B204S	110	09/1993 → 12/1998		1,2	12	063522601010	**MSN2601**
2.0 -16 CD	B204I	96	09/1993 → 12/1998		1,2	12	063522601010	**MSN2601**
2.0 -16 Turbo CD	B202S, B204E	108	09/1992 → 12/1998		1,2	12	063522601010	**MSN2601**
2.3 -16 CD Turbo	B234L	147	07/1990 → 12/1998		1,2	12	063522601010	**MSN2601**
2.3 -16 CDE	B234I	108	09/1993 → 12/1998		1,2	12	063522601010	**MSN2601**
2.3 -16 CDE Eco-Power	B234E	125	09/1993 → 12/1998		1,2	12	063522601010	**MSN2601**
9000 2 volumi /Coda spiovente								
2.0 -16 CS	B204I	96	09/1993 → 12/1998		1,2	12	063522601010	**MSN2601**
2.0 -16 ND Turbo	B202S, B204E, B204S	110	09/1993 → 12/1998		1,2	12	063522601010	**MSN2601**
2.3 -16 Aero CS	B234R	165	02/1993 → 12/1998		1,2	12	063522601010	**MSN2601**
2.3 -16 Aero CS	B234R	162	02/1993 → 12/1998		1,2	12	063522601010	**MSN2601**
2.3 -16 CS	B234I	107	09/1989 → 12/1998		1,2	12	063522601010	**MSN2601**
2.3 -16 CSE	B234I	108	09/1993 → 12/1998		1,2	12	063522601010	**MSN2601**
2.3 -16 CSE Eco Power	B234E	125	09/1993 → 12/1998		1,2	12	063522601010	**MSN2601**
2.3 -16 Turbo	B234L	143	09/1990 → 12/1998		1,2	12	063522601010	**MSN2601**
2.3 -16 Turbo CSE	B234L	147	09/1993 → 12/1998		1,2	12	063522601010	**MSN2601**
9-3 (YS3D)								
2.0 i	B204I	96	02/1998 → 09/2002		1,2	12	063522601010	**MSN2601**
2.0 SE Turbo	B204R	147	02/1998 → 09/2002		1,2	12	063522601010	**MSN2601**
2.0 Turbo	B204E	113	10/1998 → 09/2002		1,2	12	063522601010	**MSN2601**
2.0 Turbo	B204L, B205L	136	02/1998 → 09/2002		1,2	12	063522601010	**MSN2601**
2.0 Turbo	B205E	110	01/2001 → 09/2002		1,2	12	063522601010	**MSN2601**
2.0 Turbo	B205R	151	10/1999 → 09/2002		1,2	12	063522601010	**MSN2601**
2.2 TiD	D223L	92	11/2000 → 09/2002		2,0	12	063521090680	**MSN2002**
2.2 TiD	D223L, X 22 DTH	85	03/1998 → 11/2000		2,0	12	063521090680	**MSN2002**
2.3 i	B234I	110	02/1998 → 09/2002		1,2	12	063522601010	**MSN2601**
2.3 Turbo	B235R	165	10/1998 → 09/2002		1,2	12	063522601010	**MSN2601**
9-3 Cabriolet (YS3D)								
2.0 i	B204I	96	02/1998 → 08/2003		1,2	12	063522601010	**MSN2601**
2.0 SE Turbo	B204R	147	02/1998 → 08/2003		1,2	12	063522601010	**MSN2601**
2.0 Turbo	B204E	113	10/1998 → 08/2003		1,2	12	063522601010	**MSN2601**
2.0 Turbo	B204L, B205L	136	02/1998 → 08/2003		1,2	12	063522601010	**MSN2601**
2.0 Turbo	B205E	110	01/2001 → 08/2003		1,2	12	063522601010	**MSN2601**
2.3 i	B234I	110	02/1998 → 08/2003		1,2	12	063522601010	**MSN2601**
2.3 Turbo	B235R	165	10/1999 → 08/2003		1,2	12	063522601010	**MSN2601**

		kW			kW	V	LONG	SHORT
SAAB								
9-5 (YS3E)								
2.0 t	B205E	110	09/1997 →		1,2	12	063522601010	**MSN2601**
2.2 TiD	D223L	88	03/2002 → 08/2005		2,0	12	063521090680	**MSN2002**
2.3 t	B235E	125	09/1997 →		1,2	12	063522601010	**MSN2601**
2.3 t	B235E	136	01/2001 →		1,2	12	063522601010	**MSN2601**
2.3 Turbo	B235R	169	10/1999 → 09/2001		1,2	12	063522601010	**MSN2601**
9-5 Station wagon (YS3E)								
2.0 t	B204R	141	10/1998 →		1,2	12	063522601010	**MSN2601**
2.0 t	B205E	110	10/1998 →		1,2	12	063522601010	**MSN2601**
2.2 TiD	D223L	88	03/2002 → 08/2005		2,0	12	063521090680	**MSN2002**
2.3 t	B235E	125	10/1998 →		1,2	12	063522601010	**MSN2601**
2.3 t	B235E	136	01/2001 →		1,2	12	063522601010	**MSN2601**
2.3 Turbo	B235R	169	10/1999 → 09/2001		1,2	12	063522601010	**MSN2601**
SEAT								
127 (127A)								
0.9	A112 A5.000	33	04/1972 → 12/1977		0,8	12	063222908010	**MSN290**
131								
2.4 Diesel	8144.61	53	06/1982 → 12/1984		2,5	12	063217154010	**MSN230**
ALHAMBRA (7V8, 7V9)								
1.8 T 20V	AJH, AWC	110	04/1999 → 02/2000		1,1	12	063521210260	**MSN2098**
1.8 T 20V	AJH, AWC	110	05/1998 → 02/2000		1,1	12	063521210280	**MSN2099**
1.9 TDI	1Z, AHU, ANU	66	04/1996 → 02/2000		2,0	12	063521250420	**MSN2112**
1.9 TDI	1Z, AHU, ANU	66	06/2000 → 05/2005		2,0	12	063521250480	**MSN2113**
1.9 TDI	AFN, AVG	81	05/1997 → 02/2000	AUTO	2,0	12	063521250350	**MSN2111**
1.9 TDI	AFN, AVG	81	05/1997 → 02/2000	MAN	2,0	12	063521250420	**MSN2112**
1.9 TDI	ARL, BTB	110	06/2005 → 05/2007		2,0	12	063521250480	**MSN2113**
1.9 TDI	ASZ	96	11/2002 → 11/2008		2,0	12	063521250480	**MSN2113**
1.9 TDI	AUY, BVK	85	06/2000 → 03/2010		2,0	12	063521250480	**MSN2113**
1.9 TDI 4motion	AUY, BVK	85	06/2000 → 03/2010		2,0	12	063521250480	**MSN2113**
1.9 Tdi 4x4	ASZ	96	06/2005 → 11/2008		2,0	12	063521250480	**MSN2113**
2.0 i	ADY, ATM	85	04/1999 → 02/2000		1,1	12	063521210260	**MSN2098**
2.0 i	ADY, ATM	85	06/2000 → 03/2010		1,1	12	063521210280	**MSN2099**
2.0 TDI	BRT	103	11/2005 → 03/2010		2,0	12	063521250480	**MSN2113**
2.8 V6	AUE, AYL	150	06/2000 → 03/2010		2,0	12	063521250480	**MSN2113**
2.8 V6 4motion	AUE, AYL	150	05/2002 → 03/2010		2,0	12	063521250480	**MSN2113**
ALTEA (5P1)								
1.2 TSI	CBZB	77	05/2010 →		1,0	12	063521204100	**MSN2096**
1.2 TSI	CBZB	77	05/2010 →		1,1	12	063521214020	**MSN2101**
1.4 16V	BXW, CGGB	63	05/2006 → 05/2010		1,0	12	063521204060	**MSN2094**
1.4 TSI	CAXC	92	11/2007 →		1,1	12	063521214080	**MSN2102**
1.6	BGU, BSE, BSF, CCSA, CMXA	75	03/2004 → 05/2005		1,0	12	063521204080	**MSN2095**
1.6	BGU, BSE, BSF, CCSA, CMXA	75	03/2004 →		1,1	12	063521214020	**MSN2101**

		kW			kW	V	LONG	SHORT
SEAT								
ALTEA (5P1)								
1.6 LPG	CHGA	75	09/2009 →		1,0	12	063521204080	**MSN2095**
1.8 TFSI	BYT, BZB, CDAA	118	06/2007 →		1,1	12	063521214080	**MSN2102**
1.9 TDI	BJB, BKC, BLS, BXE	77	10/2005 →	MAN	1,7	12	063521230120	**MSN2104**
1.9 TDI	BJB, BKC, BLS, BXE	77	10/2005 →	AUTO	1,7	12	063521230160	**MSN2106**
1.9 TDI	BXF	66	08/2009 → 12/2010		1,7	12	063521230120	**MSN2104**
2.0 FSI	BLR, BLY, BVY, BVZ	110	05/2004 → 03/2009	AUTO	1,1	12	063521214020	**MSN2101**
2.0 FSI	BLR, BLY, BVY, BVZ	110	05/2004 → 03/2009	MAN	1,1	12	063521214080	**MSN2102**
2.0 TDI	AZV	100	04/2004 → 03/2009	MAN	1,7	12	063521230140	**MSN2105**
2.0 TDI	AZV	100	04/2004 → 03/2009	AUTO	1,7	12	063521230160	**MSN2106**
2.0 TDI	BMM	103	11/2005 →		1,7	12	063521230160	**MSN2106**
2.0 TDI	BMN, CEGA	125	03/2006 →		1,7	12	063521230160	**MSN2106**
2.0 TDI 16V	BKD, CBDB, CFHC	103	03/2004 →		1,7	12	063521230160	**MSN2106**
2.0 TFSI	BWA	147	05/2006 → 03/2009		1,1	12	063521214020	**MSN2101**
2.0 TFSI	BWA	147	05/2006 → 03/2009		1,0	12	063521214120	**MSN2103**
ALTEA XL (5P5, 5P8)								
1.2 TSI	CBZB	77	04/2010 →		1,0	12	063521204100	**MSN2096**
1.2 TSI	CBZB	77	04/2010 →		1,1	12	063521214020	**MSN2101**
1.4 16V	BXW, CGGB	63	10/2006 → 05/2010		1,0	12	063521204060	**MSN2094**
1.4 TSI	CAXC	92	11/2007 →		1,1	12	063521214080	**MSN2102**
1.6	BSE, BSF, CCSA, CMXA	75	10/2006 →		1,0	12	063521204080	**MSN2095**
1.6	BSE, BSF, CCSA, CMXA	75	10/2006 →		1,1	12	063521214020	**MSN2101**
1.6 LPG	CHGA	75	09/2009 →		1,0	12	063521204080	**MSN2095**
1.6 Multifuel	CCSA	75	12/2007 → 11/2010		1,0	12	063521204080	**MSN2095**
1.8 TFSI	BYT, BZB, CDAA	118	01/2007 → 06/2007		1,1	12	063521214080	**MSN2102**
1.9 TDI	BLS, BXE	77	10/2006 →	MAN	1,7	12	063521230120	**MSN2104**
1.9 TDI	BLS, BXE	77	10/2006 →	AUTO	1,7	12	063521230160	**MSN2106**
1.9 TDI	BXF	66	08/2009 → 12/2010		1,7	12	063521230120	**MSN2104**
2.0 FSI	BVY, BVZ	110	10/2006 → 03/2009	AUTO	1,1	12	063521214020	**MSN2101**
2.0 FSI	BVY, BVZ	110	10/2006 → 03/2009	MAN	1,1	12	063521214080	**MSN2102**
2.0 TDI	AZV	100	11/2006 → 03/2009	MAN	1,7	12	063521230140	**MSN2105**
2.0 TDI	AZV	100	11/2006 → 03/2009	AUTO	1,7	12	063521230160	**MSN2106**
2.0 TDI	BMM	103	10/2006 →		1,7	12	063521230160	**MSN2106**

		kW			kW	V	LONG	SHORT
SEAT								
ALTEA XL (5P5, 5P8)								
2.0 TDI	BMN, CEGA	125	06/2007 →		1,7	12	063521230160	**MSN2106**
2.0 TDI 16V	BKD, CBDB, CFHC	103	10/2006 →		1,7	12	063521230160	**MSN2106**
2.0 TDI 4x4	BMM	103	06/2007 →		1,7	12	063521230160	**MSN2106**
2.0 TDI 4x4	BMN, CEGA, CFJA	125	06/2007 →		1,7	12	063521230160	**MSN2106**
2.0 TFSI 4x4	BWA	147	06/2007 → 05/2009		1,1	12	063521214020	**MSN2101**
2.0 TFSI 4x4	BWA	147	06/2007 → 05/2009		1,0	12	063521214120	**MSN2103**
AROSA (6H)								
1.0	AER, ALD, ALL, ANV, AUC	37	05/1997 → 06/2004		0,9	12	063521120440	**MSN2090**
1.4	AEX, AKK, AKV, ANW, APQ, AUD	44	05/1997 → 06/2004		0,9	12	063521120440	**MSN2090**
1.4 16V	AFK, AQQ, AUB	74	01/2000 → 06/2004		1,1	12	063521071030	**MSN2073**
1.4 TDI	AMF	55	01/2000 → 06/2004		2,0	12	063521250420	**MSN2112**
1.7 SDI	AKU	44	08/1997 → 10/2003		1,8	12	063521240220	**MSN2109**
CORDOBA								
1.0	ALD, ANV, AUC	37	05/1999 → 09/2002		1,1	12	063521071030	**MSN2073**
1.0	AST, AVZ	51	05/2000 → 09/2002		1,1	12	063521071030	**MSN2073**
1.4	AKK, ANW, AUD	44	05/1999 → 09/2002		1,1	12	063521071030	**MSN2073**
1.4	APE, AUA	55	09/1999 → 09/2002		1,1	12	063521071030	**MSN2073**
1.4	AQQ, AUB	74	02/2000 → 09/2002		1,1	12	063521071030	**MSN2073**
1.6	AEH, AKL, APF, AUR	74	10/1999 → 09/2002		1,1	12	063521210260	**MSN2098**
1.6	ALM	55	05/1999 → 09/2002		1,1	12	063521071030	**MSN2073**
1.8	AQX, AYP	115	12/1999 → 09/2002		1,1	12	063521210260	**MSN2098**
1.8 i	ACC	66	05/1999 → 09/2002		1,1	12	063521210280	**MSN2099**
1.9 D	AGP, AQM	50	05/1999 → 08/2002		2,0	12	063521250350	**MSN2111**
1.9 D	AGR, ALH	66	05/1999 → 09/2002		2,0	12	063521250420	**MSN2112**
1.9 D	ASV	81	05/1999 → 09/2002		2,0	12	063521250420	**MSN2112**
CORDOBA (6K2/C2)								
1.0 i	AER	37	09/1996 → 06/1999		1,1	12	063521071030	**MSN2073**
1.4 i	ABD, AEX, AKV, ANX, APQ	44	01/1996 → 06/1999		1,1	12	063521071030	**MSN2073**
1.4 i 16V	AFH	74	09/1996 → 06/1999		1,1	12	063521071030	**MSN2073**
1.6 i	1F	55	08/1995 → 06/1999		1,1	12	063521210280	**MSN2099**
1.6 i	ABU, AEE, ALM	55	09/1993 → 12/1998		1,1	12	063521071030	**MSN2073**
1.6 i	AFT, AKL	74	07/1996 → 10/1999		1,1	12	063521210280	**MSN2099**
1.8 i	ABS, ACC, ADZ	66	08/1995 → 06/1999		1,1	12	063521210280	**MSN2099**
1.8 i 16V	ADL	95	08/1995 → 06/1996		1,1	12	063521210280	**MSN2099**
1.9 D	1Y	47	01/1996 → 08/1996		2,0	12	063521250350	**MSN2111**
1.9 D	1Y	50	09/1993 → 08/1996		2,0	12	063521250350	**MSN2111**
1.9 SDI	AEY	47	08/1996 → 06/1999		1,1	12	063521071030	**MSN2073**
1.9 SDI	AEY	47	08/1996 → 06/1999		2,0	12	063521250350	**MSN2111**
1.9 TD	AAZ	55	09/1993 → 08/1996		2,0	12	063521250350	**MSN2111**
1.9 TDI	1Z, AHU	66	08/1996 → 06/1999		2,0	12	063521250420	**MSN2112**
1.9 TDI	AFN	81	03/1997 → 06/1999		2,0	12	063521250420	**MSN2112**

		kW			kW	V	LONG	SHORT
SEAT								
CORDOBA (6K2/C2)								
2.0 i	2E, AGG	85	08/1995 → 06/1999		1,1	12	063521210280	**MSN2099**
2.0 i 16V	ABF	110	04/1999 → 06/1999		1,1	12	063521210260	**MSN2098**
CORDOBA (6L2)								
1.2	AZQ, BME	47	10/2002 → 11/2004		0,9	12	063521204000	**MSN2093**
1.2	AZQ, BME	47	12/2004 → 06/2006		1,0	12	063521204060	**MSN2094**
1.2	AZQ, BME	47	04/2004 → 11/2004		1,1	12	063521210160	**MSN2097**
1.2 12V	BXV	51	05/2006 → 11/2009		1,0	12	063521204060	**MSN2094**
1.4 16V	AUB, BBZ	74	10/2002 → 11/2004		0,9	12	063521204000	**MSN2093**
1.4 16V	AUB, BBZ	74	12/2004 → 11/2006		1,0	12	063521204060	**MSN2094**
1.4 16V	BBY, BKY	55	09/2002 → 04/2004		0,9	12	063521204000	**MSN2093**
1.4 16V	BBY, BKY	55	12/2004 → 12/2007		1,0	12	063521204060	**MSN2094**
1.4 16V	BXW	63	05/2006 → 11/2009		1,0	12	063521204060	**MSN2094**
1.4 TDI	AMF	55	11/2004 → 12/2005		1,7	12	063521230120	**MSN2104**
1.4 TDI	AMF	55	10/2002 → 10/2004		2,0	12	063521250420	**MSN2112**
1.4 TDI	BMS, BNV	59	06/2005 → 11/2009		1,7	12	063521230120	**MSN2104**
1.4 TDI	BNM	51	05/2005 → 11/2009		1,7	12	063521230180	**MSN2107**
1.6	BAH	74	04/2003 → 11/2004		0,9	12	063521204000	**MSN2093**
1.6	BAH	74	12/2004 → 11/2009		1,0	12	063521204060	**MSN2094**
1.6 16V	BTS	77	11/2006 → 11/2009		1,0	12	063521204060	**MSN2094**
1.9 SDI	ASY	47	12/2004 → 12/2005		1,7	12	063521230180	**MSN2107**
1.9 TDI	ASZ, BLT	96	11/2004 →		1,7	12	063521230140	**MSN2105**
1.9 TDI	ASZ, BLT	96	10/2002 → 10/2004		2,0	12	063521250480	**MSN2113**
1.9 TDI	ATD, AXR, BMT	74	11/2004 → 09/2005		1,7	12	063521230120	**MSN2104**
1.9 TDI	ATD, AXR, BMT	74	09/2002 → 10/2004		2,0	12	063521250420	**MSN2112**
2.0	AZL, BBX	85	11/2004 → 11/2009		1,0	12	063521204080	**MSN2095**
CORDOBA 2 volumi /Coda spiovente								
1.6 i	AFT	74	07/1996 → 06/1999		1,1	12	063521210280	**MSN2099**
1.6 SXE	1F	55	07/1996 → 04/1999		1,1	12	063521210280	**MSN2099**
1.9 D	1Z, AHU	66	07/1996 → 04/1999		2,0	12	063521250420	**MSN2112**
2.0	ABF	110	04/1999 → 04/1999		1,1	12	063521210260	**MSN2098**
CORDOBA 2 volumi /Coda spiovente (6K2)								
1.0	ALD, ANV, AUC	37	06/1999 → 10/2002		1,1	12	063521071030	**MSN2073**
1.0 16V	AST, AVZ	51	05/2000 → 10/2002		1,1	12	063521071030	**MSN2073**
1.4	AKK, ANW, AUD	44	06/1999 → 10/2002		1,1	12	063521071030	**MSN2073**
1.4 16V	APE, AUA	55	05/2000 → 10/2002		1,1	12	063521071030	**MSN2073**
1.4 16V	AQQ, AUB	74	02/2000 → 10/2002		1,1	12	063521071030	**MSN2073**
1.6	AEH, AKL, APF, AUR	74	09/1999 → 10/2000		1,1	12	063521210280	**MSN2099**
1.6	ALM	55	06/1999 → 10/2002		1,1	12	063521071030	**MSN2073**
1.8 T 20V Cupra	AQX, AYP	115	07/2000 → 10/2000		1,1	12	063521210260	**MSN2098**
1.9 SDI	AGP, AQM	50	06/1999 → 08/2002		2,0	12	063521250350	**MSN2111**
1.9 TDI	AGR, ALH	66	06/1999 → 10/2002		2,0	12	063521250420	**MSN2112**
1.9 TDI	ASK, ASV	81	06/1999 → 10/2002		2,0	12	063521250420	**MSN2112**
CORDOBA Vario (6K5)								
1.4	AKK, ANW, AUD	44	06/1999 → 12/2002		1,1	12	063521071030	**MSN2073**

		kW			kW	V	LONG	SHORT
SEAT								
CORDOBA Vario (6K5)								
1.4	AQQ, AUB	74	02/2000 → 07/2000		1,1	12	063521071030	**MSN2073**
1.4 16V	APE, AUA	55	06/1999 → 06/2000		1,1	12	063521071030	**MSN2073**
1.4 i	AEX, AKV, ANX, APQ	44	05/1997 → 06/1999		1,1	12	063521071030	**MSN2073**
1.6	AEH, AKL, APF, AUR	74	06/1999 → 12/2002		1,1	12	063521210280	**MSN2099**
1.6	ALM	55	06/1999 → 08/2002		1,1	12	063521071030	**MSN2073**
1.6 i	1F	55	05/1997 → 06/1999		1,1	12	063521210280	**MSN2099**
1.6 i	AEE, ALM	55	05/1997 → 12/1998		1,1	12	063521071030	**MSN2073**
1.6 i	AFT	74	04/1997 → 06/1999		1,1	12	063521210280	**MSN2099**
1.9 SDI	AEY	47	06/1997 → 06/1999		1,1	12	063521071030	**MSN2073**
1.9 SDI	AEY	47	06/1997 → 06/1999		2,0	12	063521250350	**MSN2111**
1.9 SDI	AGP, AQM	50	06/1999 → 08/2002		2,0	12	063521250350	**MSN2111**
1.9 TDI	1Z, AHU	66	06/1997 → 06/1999		2,0	12	063521250420	**MSN2112**
1.9 TDI	AFN	81	02/1998 → 06/1999		2,0	12	063521250420	**MSN2112**
1.9 TDI	AGR, ALH	66	06/1999 → 08/2002		2,0	12	063521250420	**MSN2112**
1.9 TDI	ASK, ASV	81	06/1999 → 08/2002		2,0	12	063521250420	**MSN2112**
EXEO (3R2)								
1.6	ALZ	75	03/2009 → 09/2010		1,2	12	063521074270	**MSN2077**
1.8 T	CFMA	110	12/2008 → 05/2010		1,2	12	063521074270	**MSN2077**
2.0 TFSI	BWE	147	03/2009 →		1,2	12	063521074270	**MSN2077**
EXEO ST (3R5)								
1.6	ALZ	75	06/2009 → 09/2010		1,2	12	063521074270	**MSN2077**
1.8 T	CFMA	110	06/2009 → 05/2010		1,2	12	063521074270	**MSN2077**
2.0 TFSI	BWE	147	06/2009 →		1,2	12	063521074270	**MSN2077**
FURA (025A)								
0.9	09 NCA, 100 GL 7000	29	03/1984 → 12/1986		0,8	12	063222908010	**MSN290**
0.9	HB 90	31	01/1982 → 06/1986		0,8	12	063222908010	**MSN290**
0.9		33	01/1982 → 12/1984		0,8	12	063222908010	**MSN290**
IBIZA I (021A)								
0.9	09 NCA, 146 A 000	29	08/1990 → 06/1991		0,8	12	063222908010	**MSN290**
0.9	146 A 000	32	08/1986 → 05/1993		0,8	12	063222908010	**MSN290**
1.2	021 A 1000	44	11/1984 → 12/1993		0,8	12	063222908010	**MSN290**
1.2	021 A 1000	47	11/1984 → 12/1993		0,8	12	063222908010	**MSN290**
1.2 i	021 C.1000	52	01/1989 → 05/1993		0,8	12	063222908010	**MSN290**
1.5	021 A 2000	63	11/1984 → 05/1993		0,8	12	063222908010	**MSN290**
1.5 i	021 B.2000	74	10/1986 → 01/1993		0,8	12	063222908010	**MSN290**
1.5 i Cat.	021 C.2000	66	10/1986 → 05/1993		0,8	12	063222908010	**MSN290**
IBIZA II (6K1)								
1.0	AAU	33	03/1993 → 06/1996		1,1	12	063521071030	**MSN2073**
1.0	AAU	33	03/1993 → 03/1995		0,8	12	063521130070	**MSN2092**
1.0 i	AER	37	09/1996 → 08/1999		1,1	12	063521071030	**MSN2073**
1.3 i	2G, AAV	40	03/1993 → 07/1994		0,8	12	063521130070	**MSN2092**
1.4 i	ABD, AEX, AKV, APQ	44	12/1997 → 08/1999		1,1	12	063521071030	**MSN2073**
1.4 i 16V	AFH	74	11/1996 → 08/1999		1,1	12	063521071030	**MSN2073**
1.6 i	1F	55	08/1995 → 06/1999		1,1	12	063521210280	**MSN2099**

		kW			kW	V	LONG	SHORT
SEAT								
IBIZA II (6K1)								
1.6 i	ABU, AEE, ALM	55	07/1994 → 12/1998		1,1	12	063521071030	**MSN2073**
1.6 i	AFT	74	04/1996 → 08/1999		1,1	12	063521210280	**MSN2099**
1.8 i	ABS, ACC, ADZ	66	08/1995 → 08/1999		1,1	12	063521210280	**MSN2099**
1.8 i 16V	ADL	95	08/1995 → 06/1996		1,1	12	063521210280	**MSN2099**
1.9 D	1Y	50	10/1994 → 08/1996		2,0	12	063521250350	**MSN2111**
1.9 D	1Y	47	04/1993 → 08/1996		2,0	12	063521250350	**MSN2111**
1.9 SDI	AEY	47	08/1996 → 08/1999		1,1	12	063521071030	**MSN2073**
1.9 SDI	AEY	47	08/1996 → 08/1999		2,0	12	063521250350	**MSN2111**
1.9 TD	AAZ	55	03/1993 → 08/1996		2,0	12	063521250350	**MSN2111**
1.9 TDI	1Z, AHU	66	12/1996 → 06/1999		2,0	12	063521250420	**MSN2112**
1.9 TDI	AFN	81	03/1997 → 06/1999		2,0	12	063521250420	**MSN2112**
2.0 i	2E, AGG	85	08/1995 → 08/1999		1,1	12	063521210280	**MSN2099**
2.0 i 16V	ABF	110	04/1999 → 08/1999		1,1	12	063521210260	**MSN2098**
IBIZA III (6K1)								
1.0	ALD, ANV, AUC	37	08/1999 → 02/2002		1,1	12	063521071030	**MSN2073**
1.0 16V	AST, AVZ	51	05/2000 → 02/2002		1,1	12	063521071030	**MSN2073**
1.4	AKK, ANW, AUD	44	08/1999 → 02/2002		1,1	12	063521071030	**MSN2073**
1.4 16V	APE, AUA	55	05/2000 → 02/2002		1,1	12	063521071030	**MSN2073**
1.4 16V	AQQ, AUB	74	08/1999 → 10/1999		1,1	12	063521071030	**MSN2073**
1.6	AEH, AKL, APF, AUR	74	08/1999 → 02/2002		1,1	12	063521210280	**MSN2099**
1.6	ALM	55	08/1999 → 02/2002		1,1	12	063521071030	**MSN2073**
1.8 T 20V Cupra	AQX, AYP	115	07/2000 → 02/2002		1,1	12	063521210260	**MSN2098**
1.9 SDI	AGP, AQM	50	08/1999 → 02/2002		2,0	12	063521250350	**MSN2111**
1.9 TDI	AGR, ALH	66	08/1999 → 02/2002		2,0	12	063521250420	**MSN2112**
1.9 TDI	ASK, ASV	81	08/1999 → 02/2002		2,0	12	063521250420	**MSN2112**
IBIZA IV (6L1)								
1.2	AZQ, BME	47	08/2002 → 04/2004		0,9	12	063521204000	**MSN2093**
1.2	AZQ, BME	47	11/2004 → 06/2006		1,0	12	063521204060	**MSN2094**
1.2	AZQ, BME	47	02/2002 → 07/2002		1,1	12	063521210160	**MSN2097**
1.2	BBM	44	06/2007 → 05/2008		1,0	12	063521204060	**MSN2094**
1.2 12V	BXV	51	05/2006 → 11/2009		1,0	12	063521204060	**MSN2094**
1.4 16V	AUB, BBZ	74	04/2002 → 10/2004		0,9	12	063521204000	**MSN2093**
1.4 16V	AUB, BBZ	74	11/2004 →		1,0	12	063521204060	**MSN2094**
1.4 16V	AUB, BBZ	74	02/2002 → 05/2002		1,1	12	063521210160	**MSN2097**
1.4 16V	BBY, BKY	55	08/2002 → 04/2004		0,9	12	063521204000	**MSN2093**
1.4 16V	BBY, BKY	55	11/2004 → 12/2007		1,0	12	063521204060	**MSN2094**
1.4 16V	BBY, BKY	55	02/2002 → 07/2002		1,1	12	063521210160	**MSN2097**
1.4 16V	BXW	63	05/2006 → 11/2009		1,0	12	063521204060	**MSN2094**
1.4 TDI	AMF	55	11/2004 → 12/2005		1,7	12	063521230120	**MSN2104**
1.4 TDI	AMF	55	05/2002 → 10/2004		2,0	12	063521250420	**MSN2112**
1.4 TDI	BMS, BNV	59	06/2005 → 11/2009		1,7	12	063521230120	**MSN2104**
1.4 TDI	BNM	51	05/2005 → 11/2009		1,7	12	063521230180	**MSN2107**
1.6	BAH	74	04/2003 → 10/2004		0,9	12	063521204000	**MSN2093**
1.6	BAH	74	11/2004 →		1,0	12	063521204060	**MSN2094**

		kW			kW	V	LONG	SHORT
SEAT								
IBIZA IV (6L1)								
1.6 16V	BTS	77	11/2006 → 11/2009		1,0	12	063521204060	**MSN2094**
1.6 16V	BTS	77	11/2006 → 11/2009		1,1	12	063521214020	**MSN2101**
1.8		132	05/2004 → 10/2004		1,1	12	063521210260	**MSN2098**
1.8		132	11/2004 → 02/2008		1,1	12	063521214080	**MSN2102**
1.8 T Cupra R	BBU, BLZ	132	01/2004 → 02/2008		1,1	12	063521210260	**MSN2098**
1.8 T Cupra R	BBU, BLZ	132	04/2005 → 02/2008		1,1	12	063521214080	**MSN2102**
1.8 T FR	BJX, BKV	110	12/2003 → 10/2004		1,1	12	063521210260	**MSN2098**
1.8 T FR	BJX, BKV	110	11/2004 → 05/2008		1,1	12	063521214080	**MSN2102**
1.9 SDI	ASY	47	11/2004 → 12/2005		1,7	12	063521230180	**MSN2107**
1.9 TDI	ASZ, BLT	96	11/2004 → 11/2009		1,7	12	063521230140	**MSN2105**
1.9 TDI	ASZ, BLT	96	02/2002 → 10/2004		2,0	12	063521250480	**MSN2113**
1.9 TDI	ATD, AXR, BMT	74	11/2004 → 05/2005		1,7	12	063521230120	**MSN2104**
1.9 TDI	ATD, AXR, BMT	74	02/2002 → 10/2004		2,0	12	063521250420	**MSN2112**
1.9 TDI Cupra R	BPX, BUK	118	11/2004 → 02/2008		1,7	12	063521230140	**MSN2105**
1.9 TDI Cupra R	BPX, BUK	118	03/2004 → 10/2004		2,0	12	063521250480	**MSN2113**
2.0	AZL, BBX	85	04/2002 →		1,0	12	063521204080	**MSN2095**
IBIZA V (6J5)								
1.2	BZG, CGPA	51	03/2008 →		1,0	12	063521204060	**MSN2094**
1.2	CGPB	44	07/2009 →		1,0	12	063521204060	**MSN2094**
1.2 TSI	CBZB	77	09/2010 →		1,0	12	063521204060	**MSN2094**
1.4	BXW, CGGB	63	03/2008 → 06/2011		1,0	12	063521204060	**MSN2094**
1.4 TDI	BMS	59	08/2008 → 06/2010		1,7	12	063521230120	**MSN2104**
1.6	BTS	77	05/2008 →		1,0	12	063521204060	**MSN2094**
1.6 LPG	CNKA	60	05/2011 →		1,0	12	063521204060	**MSN2094**
1.9 TDI	BLS	77	03/2008 → 06/2010		1,7	12	063521230120	**MSN2104**
1.9 TDI	BXJ	66	07/2008 → 06/2010		1,7	12	063521230120	**MSN2104**
2.0	CEKA	85	10/2008 →		1,0	12	063521204080	**MSN2095**
IBIZA V SPORTCOUPE (6J1)								
1.2	BZG, CGPA	51	07/2008 →		1,0	12	063521204060	**MSN2094**
1.2	CGPB, CHFA	44	07/2009 →		1,0	12	063521204060	**MSN2094**
1.2 TSI	CBZB	77	09/2010 →		1,0	12	063521204060	**MSN2094**
1.4	BXW, CGGB	63	07/2008 → 05/2011		1,0	12	063521204060	**MSN2094**
1.4 TDI	BMS	59	07/2008 → 06/2010		1,7	12	063521230120	**MSN2104**
1.6	BTS	77	07/2008 →		1,0	12	063521204060	**MSN2094**
1.6 LPG	CNKA	60	05/2011 →		1,0	12	063521204060	**MSN2094**
1.9 TDI	BLS	77	07/2008 → 06/2010		1,7	12	063521230120	**MSN2104**
1.9 TDI	BXJ	66	07/2008 → 06/2010		1,7	12	063521230120	**MSN2104**
2.0	CEKA	85	10/2008 →		1,0	12	063521204080	**MSN2095**
IBIZA V ST (6J8)								
1.2	CGPA	51	05/2010 →		1,0	12	063521204060	**MSN2094**
1.2	CGPB	44	05/2010 →		1,0	12	063521204060	**MSN2094**
1.2 TSI	CBZB	77	09/2010 →		1,0	12	063521204060	**MSN2094**
1.4	CGGB	63	04/2010 →		1,0	12	063521204060	**MSN2094**

		kW			kW	V	LONG	SHORT
SEAT								
INCA (6K9)								
1.4 16V	AUA	55	09/2000 → 06/2003		1,1	12	063521071030	**MSN2073**
1.4 i	AEX, AKV, APQ, AUD	44	09/2000 → 06/2003		1,1	12	063521071030	**MSN2073**
1.6 i	1F	55	11/1995 → 05/1997		1,1	12	063521210280	**MSN2099**
1.6 i	AEE, ALM	55	06/1997 → 09/2000		1,1	12	063521071030	**MSN2073**
1.7 D	AHB	42	09/1996 → 09/2000		2,0	12	063521250350	**MSN2111**
1.9 D	1Y	47	11/1995 → 06/2003		2,0	12	063521250350	**MSN2111**
1.9 SDI	AEY, AYQ	47	12/1995 → 06/2003		2,0	12	063521250350	**MSN2111**
LEON (1M1)								
1.4 16V	AHW, APE, AUA, AXP, BCA	55	12/1999 → 04/2004		1,1	12	063521210280	**MSN2099**
1.6	AEH, AKL, APF	74	11/1999 → 07/2004		1,1	12	063521210280	**MSN2099**
1.6	BFQ, BGU	75	10/2005 → 06/2006		1,1	12	063521210280	**MSN2099**
1.6 16 V	ATN, AUS, AZD, BCB	77	09/2000 → 06/2006		1,1	12	063521210280	**MSN2099**
1.8 20V	AGN, APG	92	11/1999 → 07/2004	MAN	1,1	12	063521210260	**MSN2098**
1.8 20V	AGN, APG	92	11/1999 → 07/2004	AUTO	1,1	12	063521210280	**MSN2099**
1.8 20V T	APP, AUQ	132	12/1999 → 04/2004	MAN	1,1	12	063521210260	**MSN2098**
1.8 20V T	APP, AUQ	132	12/1999 → 04/2004	AUTO	1,1	12	063521210280	**MSN2099**
1.8 20V T	APP, AUQ	132	09/2000 → 07/2001		2,0	12	063521250480	**MSN2113**
1.8 20V T 4	AJQ, ARY	132	03/2000 → 04/2004	MAN	1,1	12	063521210260	**MSN2098**
1.8 20V T 4	AJQ, ARY	132	03/2000 → 04/2004	AUTO	1,1	12	063521210280	**MSN2099**
1.8 20V T 4	AJQ, ARY	132	09/2000 → 07/2001		2,0	12	063521250480	**MSN2113**
1.8 T Cupra R	AMK	154	05/2002 → 05/2003		1,1	12	063521210280	**MSN2099**
1.8 Turbo 4x4	AMK	154	05/2002 → 05/2003		1,1	12	063521210280	**MSN2099**
1.9 SDI	AQM	50	12/1999 → 10/2003		2,0	12	063521250350	**MSN2111**
1.9 TDI	AGR, ALH	66	11/1999 → 07/2004		2,0	12	063521250420	**MSN2112**
1.9 TDI	AHF, ASV	81	11/1999 → 07/2004		2,0	12	063521250420	**MSN2112**
1.9 TDI	ARL	110	02/2001 → 12/2005		2,0	12	063521250480	**MSN2113**
1.9 TDI	ASZ	96	05/2003 → 06/2006		2,0	12	063521250480	**MSN2113**
1.9 TDI	AXR	74	10/2005 → 06/2006		2,0	12	063521250420	**MSN2112**
1.9 TDI Syncro	ARL	110	05/2002 → 07/2004		2,0	12	063521250480	**MSN2113**
2.8	BDE	150	05/2002 → 04/2004		2,0	12	063521250480	**MSN2113**
2.8 Cupra 4	AUE	150	02/2001 → 07/2001		2,0	12	063521250480	**MSN2113**
LEON (1P1)								
1.2 TSI	CBZB	77	05/2010 →		1,0	12	063521204100	**MSN2096**
1.4 16V	BXW, CGGB	63	06/2006 → 05/2010		1,0	12	063521204060	**MSN2094**
1.4 TSI	CAXC	92	11/2007 → 06/2011		1,1	12	063521214080	**MSN2102**
1.6	BSE, BSF, CCSA, CMXA	75	07/2005 → 06/2011		1,0	12	063521204080	**MSN2095**
1.6	BSE, BSF, CCSA, CMXA	75	07/2005 →		1,1	12	063521214020	**MSN2101**

		kW			kW	V	LONG	SHORT
SEAT								
LEON (1P1)								
1.6 LPG	CHGA	75	12/2009 → 06/2011		1,0	12	063521204080	**MSN2095**
1.6 LPG	CHGA	75	12/2009 →		1,1	12	063521214020	**MSN2101**
1.8 TSI	BZB, CDAA	118	06/2007 → 03/2009		1,1	12	063521214080	**MSN2102**
1.9 TDI	BKC, BLS, BXE	77	11/2005 → 02/2006		1,7	12	063521230120	**MSN2104**
1.9 TDI	BKC, BLS, BXE	77	07/2005 → 02/2006		1,7	12	063521230160	**MSN2106**
1.9 TDI	BXF	66	06/2007 → 12/2010		1,7	12	063521230120	**MSN2104**
2.0 D		100	08/2005 →	MAN	1,7	12	063521230140	**MSN2105**
2.0 D		100	08/2005 →	AUTO	1,7	12	063521230160	**MSN2106**
2.0 FSI	BLR, BLY, BVY, BVZ	110	07/2005 → 03/2009	AUTO	1,1	12	063521214020	**MSN2101**
2.0 FSI	BLR, BLY, BVY, BVZ	110	07/2005 → 03/2009	MAN	1,1	12	063521214080	**MSN2102**
2.0 TDI	AZV	100	07/2005 → 05/2010		1,7	12	063521230160	**MSN2106**
2.0 TDI	BMM	103	10/2005 →		1,7	12	063521230160	**MSN2106**
2.0 TDI	BMN, CEGA, CFJA	125	05/2006 →		1,7	12	063521230160	**MSN2106**
2.0 TDI 16V	BKD, CFHC	103	07/2005 →		1,7	12	063521230160	**MSN2106**
2.0 TFSI	BWA	147	11/2005 → 03/2009		1,1	12	063521214020	**MSN2101**
2.0 TFSI	BWA	147	11/2005 → 03/2009		1,0	12	063521214120	**MSN2103**
2.0 TFSI	BWA1	136	11/2005 → 05/2006		1,1	12	063521214020	**MSN2101**
2.0 TFSI	BWA1	136	11/2005 → 05/2006		1,0	12	063521214120	**MSN2103**
2.0 TFSI	BWJ, CDLD	177	11/2006 →		1,1	12	063521214020	**MSN2101**
2.0 TFSI	CCZB	155	06/2009 →		1,1	12	063521214020	**MSN2101**
2.0 TFSI	CDLA	195	09/2009 →		1,1	12	063521214020	**MSN2101**
MALAGA (023A)								
1.2	021 A 1000	44	10/1987 → 07/1992		0,8	12	063222908010	**MSN290**
1.5	021 A 2000	63	01/1987 → 07/1992		0,8	12	063222908010	**MSN290**
1.5 i	021 B.2000	74	10/1987 → 07/1992		0,8	12	063222908010	**MSN290**
1.5 i Cat.	021 A 2000, 021 C.2000, 021 D.2000	66	10/1986 → 04/1989		0,8	12	063222908010	**MSN290**
MARBELLA (28)								
0.8	08 NCA	25	01/1987 → 12/1993		0,8	12	063222908010	**MSN290**
0.9	09 NCA, 100 GL 7000	29	01/1987 → 12/1993		0,8	12	063222908010	**MSN290**
0.9 Cat.	08 NCB	30	11/1996 → 10/1998		0,8	12	063222908010	**MSN290**
0.9 Cat.	09 NCB, 100 GL 7000	29	01/1990 → 11/1996		0,8	12	063222908010	**MSN290**
MARBELLA Furgonato (028A)								
0.8	08 NCA	25	01/1987 → 12/1993		0,8	12	063222908010	**MSN290**
0.9	09 NCA	29	01/1987 → 12/1993		0,8	12	063222908010	**MSN290**
0.9 Cat.	09 NCB	29	01/1987 → 12/1993		0,8	12	063222908010	**MSN290**
PANDA (141A)								
0.9	100 GL 3000	31	01/1982 → 12/1986		0,8	12	063222908010	**MSN290**
RONDA (022A)								
1.2	021 A 1000	44	10/1984 → 12/1986		0,8	12	063222908010	**MSN290**

		kW			kW	V	LONG	SHORT
SEAT								
RONDA (022A)								
1.2	021 A 1000, 124 B6.000	47	08/1983 → 05/1985		0,8	12	063222908010	**MSN290**
1.5	021 A 2000	63	09/1984 → 12/1986		0,8	12	063222908010	**MSN290**
1.6	022 A 000, 138 AR 6000	68	08/1983 → 09/1985		0,8	12	063222908010	**MSN290**
1.7 Diesel	022 A.5000	40	06/1982 → 12/1986		0,8	12	063222908010	**MSN290**
1.7 Diesel	022 A.5000	41	06/1983 → 12/1986		0,8	12	063222908010	**MSN290**
TERRA (24)								
0.9 Cat.	09 NCB	29	02/1992 → 12/1994		0,8	12	063222908010	**MSN290**
TERRA Furgonato (024A)								
0.9	09 NCA	29	01/1987 → 12/1995		0,8	12	063222908010	**MSN290**
TOLEDO I (1L)								
1.6 i	1F	55	08/1995 → 03/1999		1,1	12	063521210280	**MSN2099**
1.6 i	1F, ABN, EZ	54	08/1995 → 03/1999		1,1	12	063521210280	**MSN2099**
1.6 i	AFT	74	11/1996 → 03/1999		1,1	12	063521210280	**MSN2099**
1.8 i	ABS, ACC, ADZ	66	08/1995 → 12/1996		1,1	12	063521210280	**MSN2099**
1.9 D	1Y	47	12/1995 → 03/1999		2,0	12	063521250350	**MSN2111**
1.9 D	1Y	50	05/1991 → 03/1999		2,0	12	063521250350	**MSN2111**
1.9 SDI		47	12/1995 → 03/1999		2,0	12	063521250350	**MSN2111**
1.9 TD	AAZ	55	05/1991 → 04/1997		2,0	12	063521250350	**MSN2111**
1.9 TDI	1Z, AHU	66	08/1995 → 03/1999		2,0	12	063521250420	**MSN2112**
1.9 TDI	AFN	81	11/1996 → 03/1999		2,0	12	063521250420	**MSN2112**
2.0 i	2E, AGG	85	08/1995 → 03/1999		1,1	12	063521210280	**MSN2099**
TOLEDO II (1M2)								
1.4 16V	AHW, APE, AUA, AXP, BCA	55	07/1999 → 05/2002		1,1	12	063521210280	**MSN2099**
1.6	AEH, AKL, APF	74	04/1999 → 09/2000		1,1	12	063521210280	**MSN2099**
1.6 16V	AUS, AZD, BCB	77	09/2000 → 07/2004		1,1	12	063521210280	**MSN2099**
1.8 20V	AGN, APG	92	04/1999 → 12/2003	MAN	1,1	12	063521210260	**MSN2098**
1.8 20V	AGN, APG	92	04/1999 → 12/2003	AUTO	1,1	12	063521210280	**MSN2099**
1.8 20VT	APP, AUQ	132	05/2001 → 10/2002		1,1	12	063521210280	**MSN2099**
1.9 TDI	AGR, ALH	66	04/1999 → 07/2004	AUTO	2,0	12	063521250350	**MSN2111**
1.9 TDI	AGR, ALH	66	04/1999 → 07/2004	MAN	2,0	12	063521250420	**MSN2112**
1.9 TDI	AHF, ASV	81	04/1999 → 09/2002		2,0	12	063521250350	**MSN2111**
1.9 TDI	AHF, ASV	81	05/1999 → 12/2003		2,0	12	063521250420	**MSN2112**
1.9 TDI	ARL	110	10/2000 → 05/2002		2,0	12	063521250480	**MSN2113**
1.9 TDI	ASZ	96	05/2003 → 07/2004		2,0	12	063521250480	**MSN2113**
2.3 V5	AGZ	110	04/1999 → 11/2000		2,0	12	063521250350	**MSN2111**
2.3 V5 20V	AQN	125	05/2001 → 11/2003		2,0	12	063521250350	**MSN2111**
TOLEDO III (5P2)								
1.6	BGU, BSE, BSF, CCSA	75	10/2004 → 05/2005		1,0	12	063521204080	**MSN2095**
1.6	BGU, BSE, BSF, CCSA	75	12/2007 → 05/2009		1,1	12	063521214020	**MSN2101**

		kW			kW	V	LONG	SHORT
SEAT								
TOLEDO III (5P2)								
1.8 TFSI	BYT, BZB, CDAA	118	06/2007 → 03/2009		1,1	12	063521214080	**MSN2102**
1.9 TDI	BJB, BKC, BLS, BXE	77	10/2004 →	MAN	1,7	12	063521230120	**MSN2104**
1.9 TDI	BJB, BKC, BLS, BXE	77	10/2004 →	AUTO	1,7	12	063521230160	**MSN2106**
2.0		147	02/2006 →		1,1	12	063521214020	**MSN2101**
2.0		147	02/2006 →		1,0	12	063521214120	**MSN2103**
2.0 FSI	BLR, BLY, BVY, BVZ	110	10/2004 → 03/2009	AUTO	1,1	12	063521214020	**MSN2101**
2.0 FSI	BLR, BLY, BVY, BVZ	110	10/2004 → 03/2009	MAN	1,1	12	063521214080	**MSN2102**
2.0 TDI	AZV	100	09/2004 → 05/2009	MAN	1,7	12	063521230140	**MSN2105**
2.0 TDI	AZV	100	09/2004 → 05/2009	AUTO	1,7	12	063521230160	**MSN2106**
2.0 TDI	BMM	103	11/2005 → 05/2009		1,7	12	063521230160	**MSN2106**
2.0 TDI	BMN, CEGA	125	01/2006 → 05/2009		1,7	12	063521230140	**MSN2105**
2.0 TDI 16V	BKD	103	04/2004 → 05/2009		1,7	12	063521230160	**MSN2106**
2.0 TFSI	BWA	147	11/2005 → 05/2009		1,1	12	063521214020	**MSN2101**
2.0 TFSI	BWA	147	11/2005 → 05/2009		1,0	12	063521214120	**MSN2103**
SKODA								
FABIA								
1.2	BBM, CHFA	44	12/2006 →		1,0	12	063521204060	**MSN2094**
1.2	BZG, CEVA, CGPA, CHTA	51	01/2007 →		1,0	12	063521204060	**MSN2094**
1.2 TSI	CBZA	63	03/2010 →		1,0	12	063521204060	**MSN2094**
1.2 TSI	CBZB	77	03/2010 →		1,0	12	063521204060	**MSN2094**
1.4	BXW, CGGB	63	01/2007 →		1,0	12	063521204060	**MSN2094**
1.4 TDI	BMS, BNV	59	01/2007 → 03/2010		1,7	12	063521230120	**MSN2104**
1.4 TDI	BNM	51	02/2007 → 03/2010		1,7	12	063521230180	**MSN2107**
1.6	BTS, CFNA	77	04/2007 →		1,0	12	063521204060	**MSN2094**
1.6	BTS, CFNA	77	06/2010 →		1,1	12	063521214020	**MSN2101**
1.9 TDI	BLS, BSW	77	04/2007 → 03/2010		1,7	12	063521230120	**MSN2104**
FABIA (6Y2)								
1.2	AWY, BMD	40	05/2004 → 10/2004		0,9	12	063521204000	**MSN2093**
1.2	AWY, BMD	40	11/2004 → 04/2007		1,0	12	063521204060	**MSN2094**
1.2	AZQ, BME	47	02/2003 → 11/2004		0,9	12	063521204000	**MSN2093**
1.2	AZQ, BME	47	11/2004 → 04/2007		1,0	12	063521204060	**MSN2094**
1.4 16V	AUA, BBY, BKY	55	06/2002 → 10/2004		0,9	12	063521204000	**MSN2093**
1.4 16V	AUA, BBY, BKY	55	11/2004 → 04/2007		1,0	12	063521204060	**MSN2094**
1.4 16V	AUA, BBY, BKY	55	12/1999 → 05/2002		1,1	12	063521210160	**MSN2097**
1.4 16V	AUB, BBZ	74	06/2002 → 08/2003		0,9	12	063521204000	**MSN2093**
1.4 16V	AUB, BBZ	74	11/2004 → 04/2007		1,0	12	063521204060	**MSN2094**
1.4 16V	AUB, BBZ	74	12/1999 → 05/2002		1,1	12	063521210160	**MSN2097**
1.4 TDI	AMF	55	11/2004 → 04/2007		1,7	12	063521230120	**MSN2104**
1.4 TDI	AMF	55	05/2003 → 10/2004		2,0	12	063521250420	**MSN2112**

		kW			kW	V	LONG	SHORT
SKODA								
FABIA (6Y2)								
1.4 TDI	BNM	51	10/2005 → 04/2007		1,7	12	063521230180	**MSN2107**
1.4 TDI	BNV	59	10/2005 → 04/2007		1,7	12	063521230120	**MSN2104**
1.9 SDI	ASY	47	11/2004 → 04/2007		1,7	12	063521230180	**MSN2107**
1.9 TDI	ATD, AXR	74	11/2004 → 04/2007		1,7	12	063521230120	**MSN2104**
1.9 TDI	ATD, AXR	74	03/2003 → 10/2004		2,0	12	063521250420	**MSN2112**
1.9 TDI RS	ASZ, BLT	96	11/2004 → 04/2007		1,7	12	063521230140	**MSN2105**
1.9 TDI RS	ASZ, BLT	96	06/2003 → 10/2004		2,0	12	063521250480	**MSN2113**
2.0	AQY, AZL	85	11/2004 → 04/2007		1,0	12	063521204080	**MSN2095**
FABIA Combi								
1.2	BBM, CHFA	44	10/2007 →		1,0	12	063521204060	**MSN2094**
1.2	BZG, CEVA, CGPA, CHTA	51	10/2007 →		1,0	12	063521204060	**MSN2094**
1.2 TSI	CBZA	63	03/2010 →		1,0	12	063521204060	**MSN2094**
1.2 TSI	CBZB	77	03/2010 →		1,0	12	063521204060	**MSN2094**
1.4	BXW, CGGB	63	10/2007 →		1,0	12	063521204060	**MSN2094**
1.4 TDI	BMS, BNV	59	10/2007 → 03/2010		1,7	12	063521230120	**MSN2104**
1.4 TDI	BNM	51	10/2007 → 03/2010		1,7	12	063521230180	**MSN2107**
1.6	BTS, CFNA	77	10/2007 →		1,0	12	063521204060	**MSN2094**
1.6	BTS, CFNA	77	06/2010 →		1,1	12	063521214020	**MSN2101**
1.9 TDI	BLS, BSW	77	10/2007 → 03/2010		1,7	12	063521230120	**MSN2104**
FABIA Combi (6Y5)								
1.2	AWY, BMD	40	08/2002 → 10/2004		0,9	12	063521204000	**MSN2093**
1.2	AWY, BMD	40	11/2004 → 12/2007		1,0	12	063521204060	**MSN2094**
1.2	AZQ, BME	47	02/2003 → 11/2004		0,9	12	063521204000	**MSN2093**
1.2	AZQ, BME	47	11/2004 → 12/2007		1,0	12	063521204060	**MSN2094**
1.4 16V	AUA, BBY, BKY	55	06/2002 → 10/2004		0,9	12	063521204000	**MSN2093**
1.4 16V	AUA, BBY, BKY	55	11/2004 → 12/2007		1,0	12	063521204060	**MSN2094**
1.4 16V	AUA, BBY, BKY	55	05/2000 → 05/2002		1,1	12	063521210160	**MSN2097**
1.4 16V	AUB, BBZ	74	06/2002 → 08/2003		0,9	12	063521204000	**MSN2093**
1.4 16V	AUB, BBZ	74	11/2004 → 12/2007		1,0	12	063521204060	**MSN2094**
1.4 16V	AUB, BBZ	74	09/2000 → 05/2002		1,1	12	063521210160	**MSN2097**
1.4 16V	BUD	59	05/2006 → 12/2007		1,0	12	063521204060	**MSN2094**
1.4 TDI	AMF	55	11/2004 → 10/2005		1,7	12	063521230120	**MSN2104**
1.4 TDI	AMF	55	05/2003 → 10/2004		2,0	12	063521250420	**MSN2112**
1.4 TDI	BNM	51	10/2005 → 12/2007		1,7	12	063521230180	**MSN2107**
1.4 TDI	BNV	59	10/2005 → 12/2007		1,7	12	063521230120	**MSN2104**
1.9 SDI	ASY	47	11/2004 → 12/2007		1,7	12	063521230180	**MSN2107**
1.9 TDI	ATD, AXR	74	11/2004 → 12/2007		1,7	12	063521230120	**MSN2104**
1.9 TDI	ATD, AXR	74	08/2000 → 10/2004		2,0	12	063521250420	**MSN2112**
2.0	AZL	85	11/2004 → 12/2007		1,0	12	063521204080	**MSN2095**
FABIA Praktik								
1.2	AWY, BMD	40	05/2004 → 10/2004		0,9	12	063521204000	**MSN2093**
1.2	AWY, BMD	40	11/2004 → 12/2007		1,0	12	063521204060	**MSN2094**
1.2	AZQ, BME	47	02/2003 → 11/2004		0,9	12	063521204000	**MSN2093**
1.2	AZQ, BME	47	11/2004 → 12/2007		1,0	12	063521204060	**MSN2094**

		kW			kW	V	LONG	SHORT
SKODA								
FABIA Praktik								
1.4 TDI	BNM	51	10/2005 → 12/2007		1,7	12	063521230180	**MSN2107**
1.9 SDI	ASY	47	11/2004 → 12/2007		1,7	12	063521230180	**MSN2107**
FABIA Tre volumi (6Y3)								
1.2	AWY, BMD	40	08/2002 → 05/2004		0,9	12	063521204000	**MSN2093**
1.2	AZQ, BME	47	02/2003 → 11/2004		0,9	12	063521204000	**MSN2093**
1.4 16V	AUA, BBY, BKY	55	06/2002 → 10/2004		0,9	12	063521204000	**MSN2093**
1.4 16V	AUA, BBY, BKY	55	11/2004 → 12/2007		1,0	12	063521204060	**MSN2094**
1.4 16V	AUA, BBY, BKY	55	10/1999 → 05/2002		1,1	12	063521210160	**MSN2097**
1.4 16V	AUB, BBZ	74	06/2002 → 08/2003		0,9	12	063521204000	**MSN2093**
1.4 16V	AUB, BBZ	74	11/2004 → 12/2007		1,0	12	063521204060	**MSN2094**
1.4 16V	AUB, BBZ	74	12/1999 → 05/2002		1,1	12	063521210160	**MSN2097**
1.4 16V	BUD	59	05/2006 → 12/2007		1,0	12	063521204060	**MSN2094**
1.4 TDI	AMF	55	11/2004 → 10/2005		1,7	12	063521230120	**MSN2104**
1.4 TDI	AMF	55	05/2003 → 10/2004		2,0	12	063521250420	**MSN2112**
1.4 TDI	BNM	51	10/2005 → 12/2007		1,7	12	063521230180	**MSN2107**
1.4 TDI	BNV	59	10/2005 → 12/2007		1,7	12	063521230120	**MSN2104**
1.9 SDI	ASY	47	11/2004 → 12/2007		1,7	12	063521230180	**MSN2107**
1.9 TDI	ATD, AXR	74	11/2004 → 12/2007		1,7	12	063521230120	**MSN2104**
1.9 TDI	ATD, AXR	74	03/2003 → 10/2004		2,0	12	063521250420	**MSN2112**
2.0	AZL	85	11/2004 → 12/2007		1,0	12	063521204080	**MSN2095**
OCTAVIA (1U2)								
1.4 16V	AXP, BCA	55	09/2000 → 05/2001		1,1	12	063521210280	**MSN2099**
1.6	AEE	55	09/1996 → 09/2000		1,1	12	063521210280	**MSN2099**
1.6	AEH, AKL	74	02/1997 → 08/2002		1,1	12	063521210280	**MSN2099**
1.6	AVU, BFQ	75	11/2000 → 04/2002		1,1	12	063521210280	**MSN2099**
1.8	AGN	92	05/1998 → 04/1999		1,1	12	063521210260	**MSN2098**
1.8	AGN	92	09/1996 → 04/1999		1,1	12	063521210280	**MSN2099**
1.8 T	AGU, ARX, ARZ, AUM	110	01/2000 → 01/2006		1,1	12	063521210260	**MSN2098**
1.8 T 4x4	AGU, ARX, AUM	110	05/2001 → 01/2006		1,1	12	063521210260	**MSN2098**
1.8 T 4x4	AGU, ARX, AUM	110	05/2001 → 12/2010		1,1	12	063521210280	**MSN2099**
1.9 SDI	AGP, AQM	50	06/1997 → 07/2000		2,0	12	063521250350	**MSN2111**
1.9 TDI	AGR, ALH	66	09/1996 → 10/2001		2,0	12	063521250350	**MSN2111**
1.9 TDI	AHF, ASV	81	08/1997 → 10/2001		2,0	12	063521250350	**MSN2111**
1.9 TDI	AHF, ASV	81	08/1997 → 01/2006		2,0	12	063521250420	**MSN2112**
1.9 TDI	ASZ	96	01/2003 → 09/2004		2,0	12	063521250480	**MSN2113**
2.0	AEG, APK, AQY, AZH	85	06/1999 → 05/2007	MAN	1,1	12	063521210260	**MSN2098**
2.0	AEG, APK, AQY, AZH	85	06/1999 → 05/2007	AUTO	1,1	12	063521210280	**MSN2099**
RS 1.8 T	AUQ	132	05/2001 → 09/2004		1,1	12	063521210260	**MSN2098**
OCTAVIA (1Z3)								
1.2 TSI	CBZB	77	02/2010 →		1,0	12	063521204100	**MSN2096**
1.4	BCA	55	05/2004 → 05/2006		1,0	12	063521204060	**MSN2094**
1.4	BUD, CGGA	59	05/2006 →		1,0	12	063521204060	**MSN2094**

		kW			kW	V	LONG	SHORT
SKODA								
OCTAVIA (1Z3)								
1.4 TSI	CAXA	90	11/2008 →		1,1	12	063521214080	**MSN2102**
1.6	BGU, BSE, BSF, CCSA, CMXA	75	06/2004 →		1,0	12	063521204080	**MSN2095**
1.6	BGU, BSE, BSF, CCSA, CMXA	75	06/2004 →		1,1	12	063521214020	**MSN2101**
1.6 FSI	BLF	85	05/2004 → 10/2008		1,0	12	063521204060	**MSN2094**
1.6 FSI	BLF	85	05/2004 → 10/2008		1,1	12	063521214020	**MSN2101**
1.8		118	06/2007 →		1,1	12	063521214080	**MSN2102**
1.8 TSI	BZB, CDAA	118	11/2008 →		1,1	12	063521214020	**MSN2101**
1.8 TSI	BZB, CDAA	118	06/2007 →		1,1	12	063521214080	**MSN2102**
1.8 TSI	CDAB	112	03/2009 →		1,1	12	063521214080	**MSN2102**
1.9 TDI	BJB, BKC, BLS, BXE	77	06/2004 → 12/2010	MAN	1,7	12	063521230120	**MSN2104**
1.9 TDI	BJB, BKC, BLS, BXE	77	06/2004 → 12/2010	AUTO	1,7	12	063521230160	**MSN2106**
2.0 FSI	BLR, BLY, BVY, BVZ	110	11/2004 →		1,1	12	063521214020	**MSN2101**
2.0 FSI	BLR, BLY, BVY, BVZ	110	11/2005 →		1,1	12	063521214080	**MSN2102**
2.0 FSi		110	11/2004 → 11/2005	AUTO	1,1	12	063521214020	**MSN2101**
2.0 FSi		110	11/2004 → 11/2005	MAN	1,1	12	063521214080	**MSN2102**
2.0 RS	BWA, CCZA	147	10/2005 →		1,1	12	063521214020	**MSN2101**
2.0 RS	BWA, CCZA	147	11/2008 →		1,0	12	063521214120	**MSN2103**
2.0 TDI	AZV	100	05/2004 → 05/2010	6	1,7	12	063521230140	**MSN2105**
2.0 TDI	AZV	100	05/2004 → 05/2010	5	1,7	12	063521230160	**MSN2106**
2.0 TDI	BMM	103	11/2005 →	6	1,7	12	063521230140	**MSN2105**
2.0 TDI	BMM	103	11/2005 →	5	1,7	12	063521230160	**MSN2106**
2.0 TDI 16V	BKD, CFHC, CLCB	103	05/2004 →	6	1,7	12	063521230140	**MSN2105**
2.0 TDI 16V	BKD, CFHC, CLCB	103	05/2004 →	5	1,7	12	063521230160	**MSN2106**
2.0 TDI RS	BMN, CEGA	125	04/2006 → 05/2008	6	1,7	12	063521230140	**MSN2105**
2.0 TDI RS	BMN, CEGA	125	04/2006 → 05/2008	5	1,7	12	063521230160	**MSN2106**
OCTAVIA Combi (1U5)								
1.4 16V	AXP, BCA	55	08/2000 → 05/2001		1,1	12	063521210280	**MSN2099**
1.6	AEE	55	08/2000 → 08/2002		1,1	12	063521210280	**MSN2099**
1.6	AEH, AKL	74	07/1998 → 08/2002		1,1	12	063521210280	**MSN2099**
1.6	AVU, BFQ	75	09/2000 → 04/2002		1,1	12	063521210280	**MSN2099**

		kW			kW	V	LONG	SHORT
SKODA								
OCTAVIA Combi (1U5)								
1.8 20V	AGN	92	07/1998 → 04/1999	MAN	1,1	12	063521210260	**MSN2098**
1.8 20V	AGN	92	07/1998 → 04/1999	AUTO	1,1	12	063521210280	**MSN2099**
1.8 T	AGU, ARX, ARZ, AUM	110	01/2000 → 01/2006		1,1	12	063521210260	**MSN2098**
1.8 T 4x4	AGU, ARX, AUM	110	05/2001 → 01/2006		1,1	12	063521210260	**MSN2098**
1.8 T 4x4	AGU, ARX, AUM	110	05/2001 → 12/2010		1,1	12	063521210280	**MSN2099**
1.9 SDI	AGP, AQM	50	08/2000 → 10/2001		2,0	12	063521250350	**MSN2111**
1.9 TDI	AGR, ALH	66	07/1998 → 10/2001		2,0	12	063521250350	**MSN2111**
1.9 TDI	AHF, ASV	81	07/1998 → 10/2001		2,0	12	063521250350	**MSN2111**
1.9 TDI	AHF, ASV	81	07/1998 → 01/2006		2,0	12	063521250420	**MSN2112**
1.9 TDI	ASZ	96	01/2003 → 09/2004		2,0	12	063521250480	**MSN2113**
1.9 TDI	ATD, AXR	74	08/2000 → 09/2004		2,0	12	063521250420	**MSN2112**
1.9 TDI	ATD, AXR	74	08/2000 → 09/2004		2,0	12	063521250480	**MSN2113**
1.9 TDI 4x4	AGR	66	08/2000 → 09/2000	AUTO	2,0	12	063521250350	**MSN2111**
1.9 TDI 4x4	AGR	66	08/2000 → 09/2000	MAN	2,0	12	063521250420	**MSN2112**
1.9 TDI 4x4	ATD	74	09/2000 → 01/2006		2,0	12	063521250420	**MSN2112**
1.9 TDI 4x4	ATD	74	09/2000 → 01/2006		2,0	12	063521250480	**MSN2113**
2.0	AEG, APK, AQY, AZH, AZJ	85	08/2000 → 01/2006	MAN	1,1	12	063521210260	**MSN2098**
2.0	AEG, APK, AQY, AZH, AZJ	85	08/2000 → 01/2006	AUTO	1,1	12	063521210280	**MSN2099**
2.0 4x4	AEG, AQY, AZH, AZJ	85	05/2001 → 01/2006	MAN	1,1	12	063521210260	**MSN2098**
2.0 4x4	AEG, AQY, AZH, AZJ	85	05/2001 → 01/2006	AUTO	1,1	12	063521210280	**MSN2099**
RS 1.8 T	AUQ	132	01/2003 → 01/2006		1,1	12	063521210260	**MSN2098**
OCTAVIA Combi (1Z5)								
1.2 TSI	CBZB	77	02/2010 →		1,0	12	063521204100	**MSN2096**
1.4	BUD, CGGA	59	05/2006 →		1,0	12	063521204060	**MSN2094**
1.4 TSI	CAXA	90	11/2008 →		1,1	12	063521214080	**MSN2102**
1.6	BGU, BSE, BSF, CCSA, CMXA	75	09/2004 →		1,0	12	063521204080	**MSN2095**
1.6	BGU, BSE, BSF, CCSA, CMXA	75	09/2004 →		1,1	12	063521214020	**MSN2101**
1.6 FSI	BLF	85	05/2004 → 10/2008		1,0	12	063521204060	**MSN2094**
1.6 FSI	BLF	85	05/2004 → 10/2008		1,1	12	063521214020	**MSN2101**
1.8 TSI	BZB, CDAA	118	11/2008 →		1,1	12	063521214020	**MSN2101**

		kW			kW	V	LONG	SHORT
SKODA								
OCTAVIA Combi (1Z5)								
1.8 TSI	BZB, CDAA	118	06/2007 →		1,1	12	063521214080	**MSN2102**
1.8 TSI	CDAB	112	05/2009 →		1,1	12	063521214080	**MSN2102**
1.8 TSI 4x4	CDAA	118	11/2008 →		1,1	12	063521214020	**MSN2101**
1.9 TDI	BJB, BKC, BLS, BXE	77	09/2004 → 12/2010	MAN	1,7	12	063521230120	**MSN2104**
1.9 TDI	BJB, BKC, BLS, BXE	77	09/2004 → 12/2010	AUTO	1,7	12	063521230160	**MSN2106**
1.9 TDI 4x4	BKC, BLS, BXE	77	11/2004 → 12/2010	MAN	1,7	12	063521230140	**MSN2105**
1.9 TDI 4x4	BKC, BLS, BXE	77	11/2004 → 12/2010	AUTO	1,7	12	063521230160	**MSN2106**
2.0 FSI	BLR, BLY, BVY, BVZ	110	11/2004 →	AUTO	1,1	12	063521214020	**MSN2101**
2.0 FSI	BLR, BLY, BVY, BVZ	110	11/2004 →	MAN	1,1	12	063521214080	**MSN2102**
2.0 FSI 4x4	BLX, BVX	110	11/2004 →		1,1	12	063521214080	**MSN2102**
2.0 RS	BWA, CCZA	147	10/2005 →		1,1	12	063521214020	**MSN2101**
2.0 RS	BWA, CCZA	147	11/2008 →		1,0	12	063521214120	**MSN2103**
2.0 TDI	BMM	103	11/2005 →	6	1,7	12	063521230140	**MSN2105**
2.0 TDI	BMM	103	11/2005 →	5	1,7	12	063521230160	**MSN2106**
2.0 TDI 16V	AZV	100	05/2004 → 05/2010	6	1,7	12	063521230140	**MSN2105**
2.0 TDI 16V	AZV	100	05/2004 → 05/2010	5	1,7	12	063521230160	**MSN2106**
2.0 TDI 16V	BKD, CFHC, CLCB	103	05/2004 →	6	1,7	12	063521230140	**MSN2105**
2.0 TDI 16V	BKD, CFHC, CLCB	103	05/2004 →	5	1,7	12	063521230160	**MSN2106**
2.0 TDI 4x4	BMM	103	07/2006 →	6	1,7	12	063521230140	**MSN2105**
2.0 TDI 4x4	BMM	103	07/2006 →	5	1,7	12	063521230160	**MSN2106**
2.0 TDI RS	BMN, CEGA	125	04/2006 → 05/2008	6	1,7	12	063521230140	**MSN2105**
2.0 TDI RS	BMN, CEGA	125	04/2006 → 05/2008	5	1,7	12	063521230160	**MSN2106**
ROOMSTER (5J)								
1.2	BME	47	05/2006 → 01/2007		1,0	12	063521204060	**MSN2094**
1.2 TSI	CBZA	63	03/2010 →		1,0	12	063521204060	**MSN2094**
1.4	BXW, CGGB	63	09/2006 →		1,0	12	063521204060	**MSN2094**
1.4 TDI	BMS, BNV	59	09/2006 → 03/2010		1,7	12	063521230120	**MSN2104**
1.4 TDI	BNM	51	07/2006 → 03/2010		1,7	12	063521230180	**MSN2107**

		kW			kW	V	LONG	SHORT
SKODA								
ROOMSTER (5J)								
1.6	BTS, CFNA	77	09/2006 →		1,0	12	063521204060	**MSN2094**
1.6	BTS, CFNA	77	09/2006 →		1,1	12	063521214020	**MSN2101**
1.9 TDI	AXR	74	03/2006 → 05/2006		1,7	12	063521230120	**MSN2104**
1.9 TDI	BLS, BSW	77	09/2006 → 03/2010		1,7	12	063521230120	**MSN2104**
ROOMSTER Praktik (5J)								
1.2 TSI	CBZA	63	03/2010 →		1,0	12	063521204060	**MSN2094**
1.4	BXW, CGGB	63	03/2007 →		1,0	12	063521204060	**MSN2094**
1.4 TDI	BMS, BNV	59	03/2007 → 03/2010		1,7	12	063521230120	**MSN2104**
1.4 TDI	BNM	51	03/2007 → 03/2010		1,7	12	063521230180	**MSN2107**
SUPERB (3T4)								
1.4 TSI	CAXC	92	07/2008 →		1,1	12	063521214080	**MSN2102**
1.8 TSI	BZB, CDAA	118	03/2008 →		1,1	12	063521214080	**MSN2102**
1.8 TSI	CDAB	112	03/2009 →		1,1	12	063521214080	**MSN2102**
1.8 TSI 4x4	CDAA	118	11/2008 →		1,1	12	063521214080	**MSN2102**
1.8 TSI 4x4	CDAB	112	03/2009 →		1,1	12	063521214020	**MSN2101**
1.9 TDI	BLS, BXE	77	03/2008 →		1,7	12	063521230120	**MSN2104**
2.0 TDI	BMP	103	03/2008 → 03/2010		1,7	12	063521230140	**MSN2105**
2.0 TDI	BMP	103	03/2008 → 03/2010		1,7	12	063521230160	**MSN2106**
2.0 TDI 16V	BKD, CFFB, CLJA	103	01/2009 →		1,7	12	063521230160	**MSN2106**
3.6 V6 4x4	CDVA	191	11/2008 →		1,7	12	063521230160	**MSN2106**
SUPERB (3U4)								
1.8 T	AWT	110	02/2002 → 02/2004		1,1	12	063521070730	**MSN2071**
1.8 T	AWT	110	03/2004 → 03/2008		1,2	12	063521074270	**MSN2077**
1.9 TDI	AVB	74	08/2002 → 10/2005		1,7	12	063521101060	**MSN2028**
1.9 TDI	AVB	74	08/2002 → 10/2005		1,8	12	063521101380	**MSN2088**
1.9 TDI	AVF, AWX	96	02/2002 → 03/2008		1,7	12	063521101060	**MSN2028**
1.9 TDI	AVF, AWX	96	01/2004 → 03/2008		1,8	12	063521101380	**MSN2088**
1.9 TDI	BSV	77	10/2005 → 05/2007		1,8	12	063521101380	**MSN2088**
2.0	AZM	85	02/2002 → 02/2004		1,1	12	063521070730	**MSN2071**
2.0	AZM	85	03/2004 → 03/2008		1,2	12	063521074270	**MSN2077**
SUPERB Station wagon (3T5)								
1.4 TSI	CAXC	92	10/2009 →		1,1	12	063521214080	**MSN2102**
1.8 TSI	CDAA	118	10/2009 →		1,1	12	063521214080	**MSN2102**
1.8 TSI	CDAB	112	10/2009 →		1,1	12	063521214080	**MSN2102**
1.8 TSI 4x4	CDAA	118	10/2009 →		1,1	12	063521214080	**MSN2102**
1.8 TSI 4x4	CDAB	112	10/2009 →		1,1	12	063521214020	**MSN2101**
1.9 TDI	BLS, BXE	77	10/2009 → 11/2010		1,7	12	063521230120	**MSN2104**
2.0 TDI	BMP	103	10/2009 →		1,7	12	063521230140	**MSN2105**
2.0 TDI	BMP	103	10/2009 →		1,7	12	063521230160	**MSN2106**
2.0 TDI 16V	BKD, CFFB, CLJA	103	10/2009 →		1,7	12	063521230160	**MSN2106**
3.6 V6 4x4	CDVA	191	10/2009 →		1,7	12	063521230160	**MSN2106**

		kW			kW	V	LONG	SHORT
SKODA								
YETI (5L)								
1.2 TSI	CBZB	77	09/2009 →		1,0	12	063521204100	**MSN2096**
1.4 TSI	CAXA	90	06/2010 →		1,1	12	063521214080	**MSN2102**
1.8 TSI 4x4	CDAA	118	05/2009 →		1,1	12	063521214020	**MSN2101**
1.8 TSI 4x4	CDAB	112	11/2009 →		1,1	12	063521214020	**MSN2101**
SMART								
CABRIO								
0.8 CDI (S1OLC1)	OM 660 DE 8LA	30	03/2001 → 01/2004		1,0	12	063521060140	**MSN2067**
CITY-COUPE (MC01)								
0.6 (S1CLA1)	M 160 E6AL B03	40	07/1998 → 01/2004		0,8	12	063191007010	**MSN800**
0.6 (S1CLB1)	M 160 E6AL B04	33	07/1998 → 01/2004		0,8	12	063191007010	**MSN800**
0.8 CDI (S1CLC1)	OM 660 DE 8LA	30	11/1999 → 01/2004		1,0	12	063521060140	**MSN2067**
FORTWO Cabrio								
0.8 CDI (450.400)	OM 660 DE 8LA	30	02/2004 → 03/2007		1,0	12	063521060140	**MSN2067**
0.8 CDi (451.400)	OM 660.950	33	04/2007 → 07/2009		1,0	12	063521060140	**MSN2067**
0.8 CDi (451.401)	OM 660.951	40	08/2009 →		1,0	12	063521060140	**MSN2067**
FORTWO Coupe								
0.8 CDI (450.300)	OM 660 DE 8LA	30	02/2004 → 03/2007		1,0	12	063521060140	**MSN2067**
0.8 CDi (451.300)	OM 660.950	33	04/2007 → 07/2009		1,0	12	063521060140	**MSN2067**
0.8 CDi (451.391)	OM 660.951	40	08/2009 →		1,0	12	063521060140	**MSN2067**
SSANGYONG								
KORANDO (KJ)								
2.0		94	05/1997 → 12/2005		1,1	12	063521074030	**MSN2074**
2.3		105	01/1999 → 12/2005		1,1	12	063521074030	**MSN2074**
2.3		103	05/1997 → 12/2005		1,1	12	063521074030	**MSN2074**
2.9 TD		88	07/1999 →		2,2	12	063522608010	**MSN2608**
KORANDO Cabrio (KJ)								
2.3		105	02/1999 → 12/2005		1,1	12	063521074030	**MSN2074**
2.3		103	11/1997 → 12/2005		1,1	12	063521074030	**MSN2074**
2.9 TD		88	07/1999 →		2,2	12	063522608010	**MSN2608**
MUSSO (FJ)								
2.0	E20	93	10/1996 → 12/2005		1,1	12	063521074030	**MSN2074**
2.3	M 111.970	103	10/1996 → 12/2005		1,1	12	063521074030	**MSN2074**
2.3		110	04/2003 → 12/2005		1,1	12	063521074030	**MSN2074**
2.9 TD		88	04/1998 →		2,2	12	063522608010	**MSN2608**
REXTON (GAB_)								
2.7 Xdi		120	08/2004 →		2,2	12	063522608010	**MSN2608**
2.9 TD		88	02/2003 →		2,2	12	063522608010	**MSN2608**
TOYOTA								
AURIS (_ZE15_, _RE15_)								
2.0 D-4D	1AD-FTV	93	03/2007 →		2,0	12	063280059010	**MSN8059**
2.2 D	2AD-FHV	130	03/2007 →		2,0	12	063280059010	**MSN8059**
AVENSIS (_T22_)								
1.8 VVT-i	1ZZ-FE	95	10/2000 → 02/2003		1,0	12	063280049010	**MSN8049**
2.0 (ST220_)	3S-FE	94	09/1997 → 06/2000		1,2	12	063280051010	**MSN8051**
2.0 VVT-i	1AZ-FSE	110	10/2000 → 02/2003		1,2	12	063280050010	**MSN8050**

		kW			kW	V	LONG	SHORT
TOYOTA								
AVENSIS (T25)								
1.6 VVT-i	3ZZ-FE	81	04/2003 → 10/2008		1,3	12	063280048010	**MSN8048**
1.8	1ZZ-FE	95	04/2003 → 10/2008		1,3	12	063280048010	**MSN8048**
2.0 D-4D	1AD-FTV	93	03/2006 →		2,0	12	063280059010	**MSN8059**
2.2 D-4D	2AD-FTV	110	10/2005 →		2,0	12	063280059010	**MSN8059**
2.2 D-CAT	2AD-FHV	130	07/2005 →		2,0	12	063280059010	**MSN8059**
AVENSIS Liftback (_T22_)								
1.6 VVT-i	3ZZ-FE	81	01/2003 → 02/2003		1,3	12	063280048010	**MSN8048**
1.6 VVT-i	3ZZ-FE	81	10/2000 → 02/2003		1,0	12	063280049010	**MSN8049**
1.8 VVT-i	1ZZ-FE	95	01/2003 → 02/2003		1,3	12	063280048010	**MSN8048**
1.8 VVT-i	1ZZ-FE	95	10/2000 → 02/2003		1,0	12	063280049010	**MSN8049**
2.0 (ST220_)	3S-FE	94	09/1997 → 06/2000		1,2	12	063280051010	**MSN8051**
2.0 VVT-i	1AZ-FSE	110	10/2000 → 02/2003		1,2	12	063280050010	**MSN8050**
AVENSIS Station Wagon (_T22_)								
1.6 VVT-i	3ZZ-FE	81	01/2003 → 02/2003		1,3	12	063280048010	**MSN8048**
1.6 VVT-i	3ZZ-FE	81	10/2000 → 02/2003		1,0	12	063280049010	**MSN8049**
1.8 VVT-i	1ZZ-FE	95	01/2003 → 02/2003		1,3	12	063280048010	**MSN8048**
1.8 VVT-i	1ZZ-FE	95	10/2000 → 02/2003		1,0	12	063280049010	**MSN8049**
2.0 (ST220_)	3S-FE	94	09/1997 → 06/2000		1,2	12	063280051010	**MSN8051**
2.0 VVT-i	1AZ-FSE	110	10/2000 → 02/2003		1,2	12	063280050010	**MSN8050**
AVENSIS Station wagon (T25)								
1.6 VVT-i	3ZZ-FE	81	04/2003 → 12/2006		1,3	12	063280048010	**MSN8048**
1.8	1ZZ-FE	95	04/2003 → 10/2008		1,3	12	063280048010	**MSN8048**
2.0 D-4D	1AD-FTV	93	03/2006 →		2,0	12	063280059010	**MSN8059**
2.2 D-4D	2AD-FTV	110	10/2005 →		2,0	12	063280059010	**MSN8059**
2.2 D-CAT	2AD-FHV	130	07/2005 →		2,0	12	063280059010	**MSN8059**
AVENSIS Station wagon (T27)								
2.0 D-4D	1AD-FTV	93	02/2009 →		2,0	12	063280059010	**MSN8059**
2.2 D-4D	2AD-FHV	130	02/2009 →		2,0	12	063280059010	**MSN8059**
2.2 D-4D	2AD-FHV, 2AD-FTV	110	02/2009 →		2,0	12	063280059010	**MSN8059**
AVENSIS Tre volumi (T25)								
1.6 VVT-i	3ZZ-FE	81	04/2003 → 10/2008		1,3	12	063280048010	**MSN8048**
1.8	1ZZ-FE	95	04/2003 → 10/2008		1,3	12	063280048010	**MSN8048**
2.0 D-4D	1AD-FTV	93	03/2006 →		2,0	12	063280059010	**MSN8059**
2.2 D-4D	2AD-FTV	110	10/2005 →		2,0	12	063280059010	**MSN8059**
2.2 D-CAT	2AD-FHV	130	07/2005 →		2,0	12	063280059010	**MSN8059**
AVENSIS VERSO (_ACM2_)								
2.0 D-4D	1CD-FTV	85	08/2001 → 07/2005		2,2	12	063280052010	**MSN8052**
2.0 VVT-i	1AZ-FE	110	08/2001 → 07/2005		1,4	12	063280053010	**MSN8053**
CAMRY (_V20)								
2.2 (SXV20_)	5S-FE	96	08/1996 → 11/2001		1,4	12	063280053010	**MSN8053**
3.0 24V (MCV20_)	1MZ-FE	140	03/1997 → 07/2001		1,4	12	063280053010	**MSN8053**
CAMRY (_V30)								
3.0 V6	1MZ-FE	137	11/2001 → 02/2006		1,4	12	063280053010	**MSN8053**

		kW		i	kW	V	LONG	SHORT
TOYOTA								
CARINA E (_T19_)								
2.0 GLI (ST191)	3S-FE	98	04/1992 → 09/1997		1,2	12	063280051010	**MSN8051**
2.0 GTi (ST191)	3S-GE	116	04/1992 → 02/1994		1,2	12	063280051010	**MSN8051**
2.0 GTi 16V (ST191_)	3S-GE	129	07/1995 → 09/1997		1,2	12	063280051010	**MSN8051**
2.0 i (ST191)	3S-FE	93	11/1994 → 09/1997		1,2	12	063280051010	**MSN8051**
CARINA E Sportswagon (_T19_)								
2.0 GLI (ST191_)	3S-FE	98	01/1993 → 09/1997		1,2	12	063280051010	**MSN8051**
2.0 i (ST191_)	3S-FE	93	05/1995 → 09/1997		1,2	12	063280051010	**MSN8051**
CARINA E Tre volumi (_T19_)								
2.0 (ST191)	3S-FE	98	01/1993 → 09/1997		1,2	12	063280051010	**MSN8051**
2.0 GTi (ST191_)	3S-GE	116	04/1992 → 02/1994		1,2	12	063280051010	**MSN8051**
2.0 GTi 16V (ST191_)	3S-GE	129	03/1994 → 09/1997		1,2	12	063280051010	**MSN8051**
2.0 i (ST191)	3S-FE	93	11/1994 → 09/1997		1,2	12	063280051010	**MSN8051**
CELICA (ZZT23_)								
1.8 16V TS (ZZT231_)	2ZZ-GE	141	08/2000 → 09/2005		1,0	12	063280049010	**MSN8049**
1.8 16V VT-i (ZZT230_)	1ZZ-FE	105	11/1999 → 09/2005		1,0	12	063280049010	**MSN8049**
COROLLA (_E11_)								
2.2 D4d	2AD-FHV	130	11/2006 →		2,0	12	063280059010	**MSN8059**
COROLLA (_E12U_, _E12J_)								
1.4 VVT-i	4ZZ-FE	71	01/2002 → 02/2007		1,0	12	063280049010	**MSN8049**
1.6 VVT-i	3ZZ-FE	81	01/2002 → 02/2007		1,0	12	063280049010	**MSN8049**
2.0 D-4D	1CD-FTV	85	05/2003 → 02/2007		2,2	12	063280052010	**MSN8052**
2.2 D4d	2AD-FHV	130	11/2006 →		2,0	12	063280059010	**MSN8059**
COROLLA Compact (_E11_)								
1.4 (ZZE111_)	4ZZ-FE	71	02/2000 → 01/2002		1,0	12	063280049010	**MSN8049**
1.6 (ZZE112_)	3ZZ-FE	81	02/2000 → 01/2002		1,0	12	063280049010	**MSN8049**
COROLLA Liftback (_E11_)								
1.4 (ZZE111_)	4ZZ-FE	71	02/2000 → 01/2002		1,0	12	063280049010	**MSN8049**
1.6 (ZZE112_)	3ZZ-FE	81	02/2000 → 01/2002		1,0	12	063280049010	**MSN8049**
COROLLA Tre volumi (_E12J_, _E12T_)								
1.4 VVT-i	4ZZ-FE	71	08/2002 → 10/2007		1,0	12	063280049010	**MSN8049**
2.2 D4d	2AD-FHV	130	11/2006 →		2,0	12	063280059010	**MSN8059**
COROLLA Verso (_E12J_)								
1.6 VVT-i	3ZZ-FE	81	01/2002 → 01/2004		1,0	12	063280049010	**MSN8049**
1.8 VVT-i	1ZZ-FE	99	01/2002 → 01/2004		1,0	12	063280049010	**MSN8049**
2.0 D-4D	1CD-FTV	66	01/2002 → 05/2004		2,2	12	063280052010	**MSN8052**
COROLLA Verso (ZER_, ZZE_, R1_)								
2.2 D-4D	2AD-FHV	130	10/2005 →		2,0	12	063280059010	**MSN8059**
2.2 D-4D	2AD-FTV	100	10/2005 →		2,0	12	063280059010	**MSN8059**
COROLLA Wagon (__E11_)								
1.4 16V (ZZE111_)	4ZZ-FE	71	02/2000 → 01/2002		1,0	12	063280049010	**MSN8049**
1.6 16V (ZZE112_)	3ZZ-FE	81	02/2000 → 01/2002		1,0	12	063280049010	**MSN8049**
MR 2 III (_W3_)								
1.8 16V VT-i (ZZW30)	1ZZ-FE	103	04/2000 → 09/2005		1,0	12	063280049010	**MSN8049**

		kW			kW	V	LONG	SHORT
TOYOTA								
PICNIC (_XM10)								
2.0	3S-FE	90	01/2001 → 12/2001		1,2	12	063280051010	**MSN8051**
2.0 16V (SXM10_)	3S-FE	94	05/1996 → 05/2000		1,2	12	063280051010	**MSN8051**
2.2 D (CMX10_)	3C-TE	66	08/1997 → 04/2001		2,2	12	063280052010	**MSN8052**
PREVIA (CLR3_, ACR3_)								
2.0 D-4D	1CD-FTV	85	03/2001 → 12/2005		2,2	12	063280052010	**MSN8052**
2.4 16V	2AZ-FE	115	08/2000 → 12/2005		1,4	12	063280053010	**MSN8053**
RAV 4 I (SXA1_)								
2.0 16V	3S-FE	95	11/1995 → 06/2000		1,2	12	063280051010	**MSN8051**
RAV 4 II (XA2)								
1.8 VVTi	1ZZ-FE	92	02/2001 → 10/2005		1,0	12	063280049010	**MSN8049**
2.0 D-4D 4WD	1CD-FTV	85	09/2001 → 10/2005		2,2	12	063280052010	**MSN8052**
2.0 VVTi 4WD	1AZ-FE	110	06/2000 → 10/2005		1,4	12	063280053010	**MSN8053**
RAV 4 III (ACA_, ACE_, ALA_, GSA3_)								
2.2 D-4D	2AD-FTV	100	03/2006 →		2,0	12	063280059010	**MSN8059**
2.2 D-CAT	2AD-FHV	130	03/2006 →		2,0	12	063280059010	**MSN8059**
YARIS (_P1_)								
1.0 16V	1SZ-FE	48	03/2003 → 08/2005		1,0	12	063280054010	**MSN8054**
1.0 16V (SCP10_)	1SZ-FE	50	04/1999 → 03/2003		1,0	12	063280054010	**MSN8054**
1.3	2SZ-FE	64	04/2002 → 08/2005		1,0	12	063280054010	**MSN8054**
1.3 16V (NCP10_)	2NZ-FE	63	11/1999 → 10/2004		1,0	12	063280055010	**MSN8055**
1.3 16V (NCP10_)	2NZ-FE	63	11/1999 → 10/2004		1,4	12	063280056010	**MSN8056**
1.3 16V (NCP10_)	2NZ-FE	63	11/1999 → 10/2004		1,6	12	063280057010	**MSN8057**
1.4 D-4D	1ND-TV	55	12/2001 → 08/2005		2,0	12	063280058010	**MSN8058**
1.5 TS (NCP13)	1NZ-FE	77	01/2003 → 08/2006		1,0	12	063280055010	**MSN8055**
1.5 VVT-i TS	1NZ-FE	78	04/2001 → 03/2003		1,0	12	063280055010	**MSN8055**
YARIS VERSO (NC/LP2_)								
1.3 (NCP22)	2NZ-FE	63	11/1999 → 03/2003		1,0	12	063280055010	**MSN8055**
1.3 (NCP22)	2NZ-FE	62	11/1999 → 09/2005		1,0	12	063280055010	**MSN8055**
1.3 (NCP22)	2NZ-FE	63	11/1999 → 03/2003		1,4	12	063280056010	**MSN8056**
1.3 (NCP22)	2NZ-FE	62	11/1999 → 09/2005		1,4	12	063280056010	**MSN8056**
1.3 (NCP22)	2NZ-FE	62	11/1999 → 09/2005		1,6	12	063280057010	**MSN8057**
1.3 (NCP22)	2NZ-FE	63	11/1999 → 03/2003		1,6	12	063280057010	**MSN8057**
1.4 D-4D (NLP22)	1ND-TV	55	12/2001 → 09/2005		2,0	12	063280058010	**MSN8058**
1.5 (NCP21)	1NZ-FE	78	03/2000 → 03/2003		1,0	12	063280055010	**MSN8055**
1.5 (NCP21)	1NZ-FE	77	05/2003 → 09/2005		1,0	12	063280055010	**MSN8055**
VAUXHALL								
AGILA Mk I (A)								
1.2 16V	Z 12 XE	55	09/2000 →		0,9	12	063521120350	**MSN2004**
ASTRA Mk II 2 volumi /Coda spiovente								
1.2	12 S	44	09/1984 → 08/1991		0,8	12	063522602010	**MSN2602**
1.4 i	C 14 NZ	44	01/1990 → 08/1991		0,8	12	063522602010	**MSN2602**
1.6	16 SV	60	01/1988 → 08/1991		0,9	12	063521120350	**MSN2004**
1.6	16 SV	60	09/1984 → 08/1991		0,8	12	063522602010	**MSN2602**
2.0 GTE	20 SEH	95	09/1986 → 08/1991		1,2	12	063522601010	**MSN2601**

		kW			kW	V	LONG	SHORT
VAUXHALL								
ASTRA Mk II 2 volumi /Coda spiovente								
2.0 GTE 16V	20 XE	115	05/1988 → 08/1991		1,2	12	063522601010	**MSN2601**
ASTRA Mk II Belmont								
1.3	13 S	55	09/1985 → 08/1991		0,8	12	063522602010	**MSN2602**
1.6	16 S, 16 SH	66	01/1988 → 08/1991		0,9	12	063521120350	**MSN2004**
1.6 S	16 SV	60	01/1989 → 12/1991		0,9	12	063521120350	**MSN2004**
1.6 S	16 SV	60	01/1989 → 12/1991		0,8	12	063522602010	**MSN2602**
ASTRA Mk II Cabriolet								
1.6 i	16 SV	60	01/1988 → 12/1991		0,9	12	063521120350	**MSN2004**
1.6 i	16 SV	60	01/1987 → 12/1991		0,8	12	063522602010	**MSN2602**
1.6 i	E 16 NZ	55	01/1991 → 08/1993		0,9	12	063521120350	**MSN2004**
1.6 i Cat.	C 16 LZ, C 16 NZ	55	01/1988 → 12/1991		0,9	12	063521120350	**MSN2004**
2.0 i	20 NE	85	01/1987 → 12/1991		1,2	12	063522601010	**MSN2601**
2.0 i Cat.	C 20 NE	85	01/1991 → 08/1993		1,2	12	063522601010	**MSN2601**
ASTRA Mk II Station wagon								
1.3	13 S	55	09/1984 → 08/1991		0,8	12	063522602010	**MSN2602**
1.6	16 SV	60	01/1988 → 08/1991		0,9	12	063521120350	**MSN2004**
1.6	16 SV	60	09/1984 → 08/1991		0,8	12	063522602010	**MSN2602**
ASTRA Mk III (F)								
1.4 i	C 14 NZ	44	04/1992 → 09/1998		0,8	12	063522602010	**MSN2602**
1.4 i	C 14 SE	60	04/1992 → 09/1998		0,8	12	063522602010	**MSN2602**
1.6 i	C 16 SE	74	05/1992 → 12/1994		0,8	12	063522602010	**MSN2602**
2.0 i	C 20 NE	85	03/1992 → 09/1998		1,2	12	063522601010	**MSN2601**
ASTRA Mk III (F) 2 volumi /Coda spiovente								
1.4 i	C 14 NZ	44	09/1991 → 02/1998		0,8	12	063522602010	**MSN2602**
1.4 i	C 14 SE	60	03/1992 → 02/1998		0,8	12	063522602010	**MSN2602**
1.6 i	C 16 NZ, E 16 NZ	55	09/1991 → 02/1998		0,8	12	063522602010	**MSN2602**
1.6 i	C 16 SE	74	03/1992 → 02/1998		0,8	12	063522602010	**MSN2602**
1.6 i	X 16 SZ	52	07/1994 → 02/1998		0,8	12	063522602010	**MSN2602**
2.0 i	C 20 NE	85	09/1991 → 02/1998		1,2	12	063522601010	**MSN2601**
2.0 i 16V	C 20 XE	110	09/1991 → 02/1998		1,2	12	063522601010	**MSN2601**
ASTRA Mk III (F) Cabriolet								
1.4 i	C 14 SE	60	05/1993 → 03/2001		0,8	12	063522602010	**MSN2602**
ASTRA Mk III (F) Station wagon								
1.4 i	C 14 NZ	44	09/1991 → 02/1998		0,8	12	063522602010	**MSN2602**
1.4 i	C 14 SE	60	03/1991 → 02/1998		0,8	12	063522602010	**MSN2602**
1.6 i	C 16 NZ, E 16 NZ	55	09/1991 → 02/1998		0,8	12	063522602010	**MSN2602**
1.6 i	X 16 SZ	52	07/1994 → 02/1998		0,8	12	063522602010	**MSN2602**
1.6 i 16V	X 16 XEL	74	01/1994 → 02/1998		0,8	12	063522602010	**MSN2602**
1.6 Si	C 16 SE	74	03/1991 → 12/1994		0,8	12	063522602010	**MSN2602**
2.0 i	C 20 NE	85	09/1991 → 02/1998		1,2	12	063522601010	**MSN2601**
ASTRA Mk IV (G)								
1.2 16V	X 12 XE	48	09/1998 → 09/2000		0,9	12	063521120350	**MSN2004**
1.2 16V	Z 12 XE	55	09/2000 →		0,9	12	063521120350	**MSN2004**
1.4 16V	X 14 XE, Z 14 XE	66	09/1998 →		0,9	12	063521120350	**MSN2004**

		kW			kW	V	LONG	SHORT
VAUXHALL								
ASTRA Mk IV (G)								
1.6	X 16 SZR	55	09/1998 → 09/2000		0,9	12	063521120350	**MSN2004**
1.6	Z 16 SE	62	09/2000 →		0,9	12	063521120350	**MSN2004**
1.6 16V	X 16 XEL, Z 16 XE	74	09/1998 →		0,9	12	063521120350	**MSN2004**
1.6 Dualfuel	Z 16 XE	63	09/2002 →		0,9	12	063521120350	**MSN2004**
2.0 DI	X 20 DTL, Y 20 DTL	60	03/1998 → 07/2004		2,0	12	063521090680	**MSN2002**
2.0 DTI 16V	X 20 DTH, Y 20 DTH	74	09/2000 → 07/2004		2,0	12	063521090680	**MSN2002**
2.2 16V	Z 22 SE	108	03/2001 →		1,8	12	063523803010	**MSN2801**
ASTRA Mk IV (G) 2 volumi /Coda spiovente								
1.2 16V	X 12 XE	48	02/1998 → 09/2000		0,9	12	063521120350	**MSN2004**
1.2 16V	Z 12 XE	55	09/2000 →		0,9	12	063521120350	**MSN2004**
1.4 16V	X 14 XE, Z 14 XE	66	02/1998 →		0,9	12	063521120350	**MSN2004**
1.6	X 16 SZR	55	02/1998 → 09/2000		0,9	12	063521120350	**MSN2004**
1.6	Z 16 SE	62	09/2000 →		0,9	12	063521120350	**MSN2004**
1.6 16V	X 16 XEL, Z 16 XE	74	02/1998 →		0,9	12	063521120350	**MSN2004**
1.6 Dualfuel	Z 16 XE	63	09/2002 →		0,9	12	063521120350	**MSN2004**
2.0 DI	X 20 DTL, Y 20 DTL	60	03/1998 → 08/2000		2,0	12	063521090680	**MSN2002**
2.0 DTI 16V	X 20 DTH, Y 20 DTH	74	09/2000 → 08/2005		2,0	12	063521090680	**MSN2002**
2.2 16V	Z 22 SE	108	03/2001 →		1,8	12	063523803010	**MSN2801**
ASTRA Mk IV (G) Cabriolet								
1.6 16V	Z 16 XE	74	03/2001 →		0,9	12	063521120350	**MSN2004**
2.2 16V	Z 22 SE	108	03/2001 →		1,8	12	063523803010	**MSN2801**
ASTRA Mk IV (G) Coupe								
2.2 16V	Z 22 SE	108	03/2000 →		1,8	12	063523803010	**MSN2801**
ASTRA Mk IV (G) Station wagon								
1.2 16V	X 12 XE	48	02/1998 → 09/2000		0,9	12	063521120350	**MSN2004**
1.2 16V	Z 12 XE	55	09/2000 →		0,9	12	063521120350	**MSN2004**
1.4 16V	X 14 XE, Z 14 XE	66	02/1998 →		0,9	12	063521120350	**MSN2004**
1.6	X 16 SZR	55	03/1998 → 04/2004		0,9	12	063521120350	**MSN2004**
1.6	Z 16 SE	62	03/1998 → 04/2004		0,9	12	063521120350	**MSN2004**
1.6 16V	X 16 XEL, Z 16 XE	74	03/1998 → 04/2004		0,9	12	063521120350	**MSN2004**
1.6 Dualfuel	Z 16 XE	63	03/1998 → 04/2004		0,9	12	063521120350	**MSN2004**
2.0 DI	X 20 DTL, Y 20 DTL	60	03/1998 → 04/2004		2,0	12	063521090680	**MSN2002**
2.0 DTI 16V	X 20 DTH, Y 20 DTH	74	09/2000 → 04/2004		2,0	12	063521090680	**MSN2002**
2.2 16V	Z 22 SE	108	03/2001 →		1,8	12	063523803010	**MSN2801**
ASTRA Mk V (H) Sport Hatch								
1.3 CDTi	Z 13 DTH	66	04/2005 →		1,3	12	063280045010	**MSN8045**
ASTRA Mk VI (J)								
1.4	A 14 XEL	64	12/2009 →		1,1	12	063521074920	**MSN2117**
1.4	A 14 XER	74	12/2009 →		1,1	12	063521074920	**MSN2117**
1.4 Turbo	A 14 NET	103	12/2009 →		1,1	12	063521074920	**MSN2117**
ASTRA Mk VI (J) Sports Tourer								
1.4	A 14 XER	74	10/2010 →		1,1	12	063521074920	**MSN2117**
ASTRAVAN Mk III (F)								
1.4 i	C 14 NZ	44	01/1991 → 10/1994		0,8	12	063522602010	**MSN2602**

		kW			kW	V	LONG	SHORT
VAUXHALL								
ASTRAVAN Mk III (F)								
1.6 i	C 16 NZ	55	01/1991 → 08/1998		0,8	12	063522602010	**MSN2602**
ASTRAVAN Mk IV (G)								
1.6 i	X 16 SZR	55	08/1998 → 09/2000		0,9	12	063521120350	**MSN2004**
1.6 i	Z 16 SE	62	09/2000 →		0,9	12	063521120350	**MSN2004**
2.0 DI	X 20 DTL	60	08/1998 → 08/2000		2,0	12	063521090680	**MSN2002**
2.0 DTI	Y 20 DTH	74	04/2004 → 08/2005		2,0	12	063521090680	**MSN2002**
ASTRAVAN Mk V (H)								
1.3 CDTi	Z 13 DTH	66	08/2005 →		1,3	12	063280045010	**MSN8045**
CALIBRA								
2.0 i	C 20 NE	85	06/1990 → 07/1997		1,2	12	063522601010	**MSN2601**
2.0 i 16V	C 20 XE	110	06/1990 → 02/1994		1,2	12	063522601010	**MSN2601**
2.0 i 16V 4x4	C 20 XE	110	06/1990 → 02/1994		1,2	12	063522601010	**MSN2601**
2.0 i 4x4	C 20 NE	85	06/1990 → 07/1997		1,2	12	063522601010	**MSN2601**
CARLTON Mk III								
1.8 N	18 NV	60	09/1986 → 08/1987		1,2	12	063522601010	**MSN2601**
2.0	C 20 NE	85	09/1986 → 03/1994		1,2	12	063522601010	**MSN2601**
2.0	C 20 NEF	74	09/1990 → 03/1994		1,2	12	063522601010	**MSN2601**
2.0	C 20 NEJ	73	09/1990 → 03/1994		1,2	12	063522601010	**MSN2601**
2.0 i	20 SE	90	09/1986 → 03/1994		1,2	12	063522601010	**MSN2601**
CARLTON Mk III Station wagon								
1.8 N	18 NV	60	09/1986 → 08/1987		1,2	12	063522601010	**MSN2601**
1.8 S	18 SV	66	09/1986 → 03/1994		1,2	12	063522601010	**MSN2601**
2.0	C 20 NE	85	09/1986 → 03/1994		1,2	12	063522601010	**MSN2601**
2.0	C 20 NEF	74	09/1990 → 03/1994		1,2	12	063522601010	**MSN2601**
2.0 i	C 20 NEJ	73	09/1990 → 03/1994		1,2	12	063522601010	**MSN2601**
CAVALIER Mk II								
2.0 SRi 130	20 SEH	95	03/1987 → 08/1988		1,2	12	063522601010	**MSN2601**
CAVALIER Mk II 2 volumi /Coda spiovente								
1.3 S	13 S	55	09/1981 → 08/1988		0,9	12	063521120350	**MSN2004**
2.0 SRi 130	20 SEH	95	03/1987 → 08/1988		1,2	12	063522601010	**MSN2601**
CAVALIER Mk III (87)								
1.4 S	14 NV	55	09/1988 → 11/1995		0,9	12	063521120350	**MSN2004**
1.6	16 SV	60	09/1988 → 05/1993		0,9	12	063521120350	**MSN2004**
1.6	16 SV	60	09/1988 → 05/1993		0,8	12	063522602010	**MSN2602**
1.6 i	E 16 NZ	55	09/1988 → 11/1995		0,9	12	063521120350	**MSN2004**
1.6 i	E 16 NZ	55	09/1988 → 11/1995		0,8	12	063522602010	**MSN2602**
1.6 i	X 16 SZ	52	09/1993 → 11/1995		0,9	12	063521120350	**MSN2004**
1.8	18 SV, C 18 NZ	66	09/1988 → 08/1995		1,2	12	063522601010	**MSN2601**
1.8 i Cat.	C 18 NZ	66	03/1990 → 11/1995		1,2	12	063522601010	**MSN2601**
2.0 i	20 NE	85	09/1988 → 10/1990		1,2	12	063522601010	**MSN2601**
2.0 i 16V	C 20 XE	110	09/1988 → 11/1995		1,2	12	063522601010	**MSN2601**
2.0 i 16V 4x4	C 20 XE	110	09/1988 → 11/1995		1,2	12	063522601010	**MSN2601**
2.0 i 4x4	20 NE	85	01/1991 → 10/1992		1,2	12	063522601010	**MSN2601**
2.0 i 4x4	20 SEH	95	09/1988 → 09/1992		1,2	12	063522601010	**MSN2601**

		kW			kW	V	LONG	SHORT
VAUXHALL								
CAVALIER Mk III (87)								
2.0 i Cat.	C 20 NE	85	09/1990 → 11/1995		1,2	12	063522601010	**MSN2601**
2.0 i Turbo 4x4	C 20 LET	150	06/1992 → 11/1994		1,2	12	063522601010	**MSN2601**
2.0 SRi	20 SEH	95	09/1988 → 09/1992		1,2	12	063522601010	**MSN2601**
CAVALIER Mk III 2 volumi /Coda spiovente								
1.4 S	14 NV	55	09/1988 → 11/1995		0,9	12	063521120350	**MSN2004**
1.6	16 SV	60	09/1988 → 05/1993		0,9	12	063521120350	**MSN2004**
1.6	16 SV	60	09/1988 → 05/1993		0,8	12	063522602010	**MSN2602**
1.6 i	E 16 NZ	55	09/1988 → 11/1995		0,9	12	063521120350	**MSN2004**
1.6 i	E 16 NZ	55	09/1988 → 11/1995		0,8	12	063522602010	**MSN2602**
1.6 i	X 16 SZ	52	09/1993 → 11/1995		0,9	12	063521120350	**MSN2004**
1.6 i	X 16 SZ	52	09/1993 → 11/1995		0,8	12	063522602010	**MSN2602**
1.8	18 SV, C 18 NZ	66	09/1988 → 10/1990		1,2	12	063522601010	**MSN2601**
1.8 i Cat.	C 18 NZ	66	03/1990 → 11/1995		1,2	12	063522601010	**MSN2601**
2.0 i	20 NE	85	09/1988 → 10/1992		1,2	12	063522601010	**MSN2601**
2.0 i 16V	C 20 XE	110	09/1988 → 11/1995		1,2	12	063522601010	**MSN2601**
2.0 i 16V 4x4	C 20 XE	110	01/1992 → 11/1993		1,2	12	063522601010	**MSN2601**
2.0 i 4x4	20 NE	85	01/1991 → 10/1992		1,2	12	063522601010	**MSN2601**
2.0 i 4x4	20 SEH	95	09/1988 → 09/1992		1,2	12	063522601010	**MSN2601**
2.0 i Cat.	C 20 NE	85	09/1990 → 11/1995		1,2	12	063522601010	**MSN2601**
2.0 SRi	20 SEH	95	09/1988 → 09/1992		1,2	12	063522601010	**MSN2601**
COMBO Mk I (B)								
1.2	C 12 NZ, X 12 SZ	33	07/1994 → 10/2001		0,9	12	063521120350	**MSN2004**
1.4	C 14 SE	60	07/1994 → 10/2001		0,9	12	063521120350	**MSN2004**
COMBO Mk II (C)								
1.6	Z 16 SE	64	10/2001 →		0,9	12	063521120350	**MSN2004**
CORSA Cabriolet								
1.4 i 16V	X 14 XE	66	01/1998 →		0,9	12	063521120350	**MSN2004**
CORSA Mk II (B)								
1.2 i	C 12 NZ, X 12 SZ	33	03/1993 → 09/2000		0,9	12	063521120350	**MSN2004**
1.2 i 16V	X 12 XE	48	03/1998 → 09/2000		0,9	12	063521120350	**MSN2004**
1.4 i	C 14 NZ, X 14 SZ	44	03/1993 → 09/2000		0,9	12	063521120350	**MSN2004**
1.4 i 16V	X 14 XE	66	09/1994 → 09/2000		0,9	12	063521120350	**MSN2004**
1.4 i S	C 14 SE	60	03/1993 → 09/2000		0,9	12	063521120350	**MSN2004**
1.6 GSI 16V	C 16 XE	80	03/1993 → 09/2000		0,9	12	063521120350	**MSN2004**
1.6 i 16V	X 16 XE	78	09/1994 → 09/2000		0,9	12	063521120350	**MSN2004**
CORSA Mk III (C)								
1.2 16V	Z 12 XE	55	09/2000 →		0,9	12	063521120350	**MSN2004**
1.2 16V Dualfuel	Z 12 XE	55	08/2001 →		0,9	12	063521120350	**MSN2004**
1.4 16V	Z 14 XE	66	09/2000 →		0,9	12	063521120350	**MSN2004**
CORSAVAN Mk II (B)								
1.4 i	C 14 NZ	44	01/1994 → 09/2000		0,9	12	063521120350	**MSN2004**
CORSAVAN Mk III (C)								
1.2 16V	Z 12 XE	55	09/2000 →		0,9	12	063521120350	**MSN2004**
1.2 16V Dualfuel	Z 12 XE	55	08/2001 →		0,9	12	063521120350	**MSN2004**

		kW			kW	V	LONG	SHORT
VAUXHALL								
FRONTERA Mk I (A) Sport								
2.0 i	C 20 NE, X 20 SE	85	03/1992 → 10/1998		1,2	12	063522601010	**MSN2601**
FRONTERA Mk II (B)								
2.2 DTI	X 22 DTH, Y 22 DTH	85	10/1998 → 09/2004		2,0	12	063521090680	**MSN2002**
MERIVA Mk I (A)								
1.6 i	Z 16 SE	64	01/2003 → 10/2009		0,9	12	063521120350	**MSN2004**
1.6 i 16V	Z 16 XE	74	01/2003 → 10/2009		0,9	12	063521120350	**MSN2004**
MERIVA Mk II (B)								
1.4	A 14 NEL	88	06/2010 →		1,1	12	063521074920	**MSN2117**
1.4	A 14 XER	74	06/2010 →		1,1	12	063521074920	**MSN2117**
NOVA 2 volumi /Coda spiovente								
1.6 GSI	C 16 SEI	72	09/1989 → 03/1993		0,9	12	063521120350	**MSN2004**
1.6 GSI	E 16 SE	74	05/1988 → 03/1992		0,9	12	063521120350	**MSN2004**
1.6 GSI Cat.	C 16 SE	74	02/1992 → 03/1993		0,9	12	063521120350	**MSN2004**
OMEGA (B)								
2.0 DTI 16V	X 20 DTH	74	01/1998 → 08/2000		2,0	12	063521090680	**MSN2002**
2.2 DTI 16V	Y 22 DTH	88	08/2000 → 09/2003		2,0	12	063521090680	**MSN2002**
OMEGA (B) Station wagon								
2.0 DTI 16V	X 20 DTH	74	01/1998 → 08/2000		2,0	12	063521090680	**MSN2002**
2.2 DTI 16V	Y 22 DTH	88	08/2000 → 09/2003		2,0	12	063521090680	**MSN2002**
SIGNUM								
2.0 DTI	Y 20 DTH	74	05/2003 → 09/2005		2,0	12	063521090680	**MSN2002**
2.2 DTI	Y 22 DTR	92	05/2003 → 09/2008		2,0	12	063521090680	**MSN2002**
SINTRA								
2.2 DTI	X 22 DTH	85	07/1997 → 04/1999		2,0	12	063521090680	**MSN2002**
TIGRA Mk I								
1.4 16V	X 14 XE	66	07/1994 → 12/2000		0,9	12	063521120350	**MSN2004**
1.4 16V	X 14 XE	66	07/1994 → 12/2000		0,8	12	063522602010	**MSN2602**
1.6 16V	X 16 XE	78	07/1994 → 12/2000		0,9	12	063521120350	**MSN2004**
VECTRA (B)								
1.6 i	X 16 SZR	55	08/1995 → 10/2001		0,9	12	063521120350	**MSN2004**
1.6 i 16V	X 16 XEL, Y 16 XE, Z 16 XE	74	08/1995 → 10/2001		0,9	12	063521120350	**MSN2004**
2.0 DI 16V	X 20 DTL	60	09/1996 → 08/2000		2,0	12	063521090680	**MSN2002**
2.0 DTI 16V	X 20 DTH, Y 20 DTH	74	09/1997 → 08/2001		2,0	12	063521090680	**MSN2002**
2.2 DTI 16V	Y 22 DTR	92	09/2000 → 08/2001		2,0	12	063521090680	**MSN2002**
2.2 i 16V	Z 22 SE	108	09/2000 → 10/2001		1,8	12	063523803010	**MSN2801**
VECTRA (B) 2 volumi /Coda spiovente								
1.6 i 16V	X 16 XEL, Y 16 XE, Z 16 XE	74	08/1995 → 10/2001		0,9	12	063521120350	**MSN2004**
2.0 Di 16V	X 20 DTL	60	09/1996 → 08/2000		2,0	12	063521090680	**MSN2002**
2.0 DTi 16V	X 20 DTH, Y 20 DTH	74	09/1997 → 08/2001		2,0	12	063521090680	**MSN2002**
2.2 DTI 16V	Y 22 DTR	92	09/2000 → 08/2001		2,0	12	063521090680	**MSN2002**
2.2 i 16V	Z 22 SE	108	09/2000 →		1,8	12	063523803010	**MSN2801**

		kW		i	kW	V	LONG	SHORT
VAUXHALL								
VECTRA (B) Station wagon								
1.6 i	X 16 SZR	55	11/1996 →		0,9	12	063521120350	**MSN2004**
1.6 i 16V	X 16 XEL, Y 16 XE, Z 16 XE	74	11/1996 →		0,9	12	063521120350	**MSN2004**
2.0 DI 16V	X 20 DTL	60	09/1996 → 08/2000		2,0	12	063521090680	**MSN2002**
2.0 DTI 16V	X 20 DTH, Y 20 DTH	74	09/1997 → 08/2001		2,0	12	063521090680	**MSN2002**
2.2 DTI 16V	Y 22 DTR	92	09/2000 → 08/2001		2,0	12	063521090680	**MSN2002**
2.2 i 16V	Z 22 SE	108	09/2000 → 10/2001		1,8	12	063523803010	**MSN2801**
VECTRA Mk II (C)								
2.0 DTI 16V	Y 20 DTH	74	04/2002 → 09/2005		2,0	12	063521090680	**MSN2002**
2.2 DTI 16V	Y 22 DTR	92	04/2002 → 09/2005		2,0	12	063521090680	**MSN2002**
VECTRA Mk II (C) GTS								
2.0 DTI 16V	Y 20 DTH	74	08/2002 → 09/2005		2,0	12	063521090680	**MSN2002**
2.2 DTI 16V	Y 22 DTR	92	08/2002 → 09/2005		2,0	12	063521090680	**MSN2002**
VECTRA Mk II (C) Station wagon								
2.0 DTI 16V	Y 20 DTH	74	10/2003 → 09/2005		2,0	12	063521090680	**MSN2002**
2.2 DTI 16V	Y 22 DTR	92	10/2003 → 09/2005		2,0	12	063521090680	**MSN2002**
VX220								
2.2 i	Z 22 SE	108	09/2000 →		1,8	12	063523803010	**MSN2801**
ZAFIRA Mk I (A)								
1.6 16V	X 16 XEL, Z 16 XE	74	04/1999 →		0,9	12	063521120350	**MSN2004**
2.0 DI 16V	X 20 DTL	60	10/1999 → 08/2000		2,0	12	063521090680	**MSN2002**
2.0 DTI 16V	Y 20 DTH	74	04/1999 → 06/2005		2,0	12	063521090680	**MSN2002**
2.2 16V	Z 22 SE	108	09/2000 → 08/2004		1,8	12	063523803010	**MSN2801**
2.2 D	Y 22 DTR	92	03/2002 → 06/2005		2,0	12	063521090680	**MSN2002**
VOLVO								
C30								
1.6	B 4164 S3	74	10/2006 →		1,2	12	063280010010	**MSN8010**
1.6 D	D 4164 T	80	10/2006 →		1,2	12	063280029010	**MSN8029**
1.8	B 4184 S11	92	10/2006 →		1,2	12	063280027010	**MSN8027**
1.8 FlexFuel	B 4184 S8	92	01/2007 →		1,2	12	063280027010	**MSN8027**
2.0	B 4204 S3	107	10/2006 →		1,2	12	063280027010	**MSN8027**
2.0 D	D 4204 T	100	10/2006 →		2,2	12	063280036010	**MSN8036**
C70 II Cabriolet								
2.0 D	D 4204 T	100	01/2008 →		2,2	12	063280036010	**MSN8036**
S40 II (MS)								
1.6	B 4164 S3	74	01/2005 →		1,2	12	063280010010	**MSN8010**
1.6 D	D 4164 T	81	01/2005 →		1,2	12	063280029010	**MSN8029**
1.8	B 4184 S11	92	04/2004 →		1,2	12	063280027010	**MSN8027**
1.8 FlexFuel	B 4184 S8	92	01/2006 →		1,2	12	063280027010	**MSN8027**
2.0 D	D 4204 T	100	01/2004 →		2,2	12	063280036010	**MSN8036**
V50 (MW)								
1.6	B 4164 S3	74	01/2005 →		1,2	12	063280010010	**MSN8010**
1.6 D	D 4164 T	81	01/2005 →		1,2	12	063280029010	**MSN8029**

		kW			kW	V	LONG	SHORT
VOLVO								
V50 (MW)								
2.0 D	D 4204 T	100	04/2004 →		2,2	12	063280036010	**MSN8036**
V70 III Station wagon								
2.0 D	D 4204 T	100	10/2007 →		2,2	12	063280036010	**MSN8036**
VW								
BORA (1J2)								
1.4 16V	AHW, AKQ, APE, AXP, BCA	55	03/2000 → 05/2005		1,1	12	063521210280	**MSN2099**
1.6	AEH, AKL, APF	74	10/1998 → 05/2005		1,1	12	063521210280	**MSN2099**
1.6	AVU, BFQ, BJH	75	09/2000 → 05/2005		1,1	12	063521210280	**MSN2099**
1.6 16V	ATN, AUS, AZD, BCB	77	05/2000 → 05/2005		1,1	12	063521210280	**MSN2099**
1.6 FSI	BAD	81	07/2002 → 05/2005		0,9	12	063521204000	**MSN2093**
1.6 FSI	BAD	81	01/2002 → 06/2002		1,1	12	063521210160	**MSN2097**
1.8	AGN, BAF	92	10/1998 → 10/2000		1,1	12	063521210260	**MSN2098**
1.8 4motion	AGN	92	02/1999 → 10/2000		1,1	12	063521210260	**MSN2098**
1.8 T	AGU, ARX, AUM, BAE	110	05/2000 → 05/2005	MAN	1,1	12	063521210260	**MSN2098**
1.8 T	AGU, ARX, AUM, BAE	110	05/2000 → 05/2005	5	1,1	12	063521210280	**MSN2099**
1.8 T	AGU, ARX, AUM, BAE	110	05/2000 → 05/2005		2,0	12	063521250480	**MSN2113**
1.9 SDI	AGP, AQM	50	10/1998 → 05/2005		2,0	12	063521250350	**MSN2111**
1.9 TDI	AGR, ALH	66	10/1998 → 06/2001	AUTO	2,0	12	063521250350	**MSN2111**
1.9 TDI	AGR, ALH	66	10/1998 → 06/2001	MAN	2,0	12	063521250420	**MSN2112**
1.9 TDI	AHF, ASV	81	10/1998 → 06/2001	AUTO	2,0	12	063521250350	**MSN2111**
1.9 TDI	AHF, ASV	81	10/1998 → 06/2001	MAN	2,0	12	063521250420	**MSN2112**
1.9 TDI	AJM, AUY	85	01/2000 → 05/2001		2,0	12	063521250480	**MSN2113**
1.9 TDI	ARL	110	05/2000 → 05/2005		2,0	12	063521250480	**MSN2113**
1.9 TDI	ASZ	96	01/2001 → 01/2002		2,0	12	063521250480	**MSN2113**
1.9 TDI	ATD, AXR	74	09/2000 → 05/2005	5	2,0	12	063521250420	**MSN2112**
1.9 TDI	ATD, AXR	74	09/2000 → 05/2005	6	2,0	12	063521250480	**MSN2113**
1.9 TDI 4motion	AGR	66	02/1999 → 06/2001	AUTO	2,0	12	063521250350	**MSN2111**
1.9 TDI 4motion	AGR	66	02/1999 → 06/2001	MAN	2,0	12	063521250420	**MSN2112**
1.9 TDI 4motion	AJM, AUY	85	02/1999 → 04/2001		2,0	12	063521250480	**MSN2113**
1.9 TDI 4motion	ARL	110	09/2000 → 05/2005		2,0	12	063521250480	**MSN2113**
1.9 TDI 4motion	ASZ	96	01/2001 → 01/2002		2,0	12	063521250480	**MSN2113**
1.9 TDI 4motion	ATD	74	09/2000 → 05/2005	5	2,0	12	063521250420	**MSN2112**

		kW			kW	V	LONG	SHORT
VW								
BORA (1J2)								
1.9 TDI 4motion	ATD	74	09/2000 → 05/2005	6	2,0	12	063521250480	**MSN2113**
2.0	APK, AQY, AZG, AZH, AZJ, BBW	85	10/1998 → 05/2005	MAN	1,1	12	063521210260	**MSN2098**
2.0	APK, AQY, AZG, AZH, AZJ, BBW	85	10/1998 → 05/2005	AUTO	1,1	12	063521210280	**MSN2099**
2.0 4motion	AZH, AZJ	85	04/2000 → 05/2005	MAN	1,1	12	063521210260	**MSN2098**
2.0 4motion	AZH, AZJ	85	04/2000 → 05/2005	AUTO	1,1	12	063521210280	**MSN2099**
2.3 V5	AGZ	110	10/1998 → 10/2000		2,0	12	063521250350	**MSN2111**
2.3 V5	AQN	125	10/2000 → 05/2005		2,0	12	063521250480	**MSN2113**
2.3 V5 4motion	AGZ	110	01/1999 → 10/2000		2,0	12	063521250350	**MSN2111**
2.3 V5 4motion	AQN	125	10/2000 → 05/2005		2,0	12	063521250480	**MSN2113**
2.8 V6 4motion	AQP, AUE, BDE	150	05/1999 → 04/2001		2,0	12	063521250480	**MSN2113**
BORA Station wagon (1J6)								
1.4 16V	AHW, AXP, BCA	55	09/2001 → 05/2005		1,1	12	063521210280	**MSN2099**
1.6	AEH, AKL, APF	74	05/1999 → 05/2005		1,1	12	063521210280	**MSN2099**
1.6	AVU, BFQ	75	09/2000 → 05/2005		1,1	12	063521210280	**MSN2099**
1.6 16V	ATN, AUS, AZD, BCB	77	02/2000 → 05/2005		1,1	12	063521210280	**MSN2099**
1.6 FSI	BAD	81	07/2002 → 05/2005		0,9	12	063521204000	**MSN2093**
1.6 FSI	BAD	81	01/2002 → 06/2002		1,1	12	063521210160	**MSN2097**
1.8 4motion	AGN	92	05/1999 → 10/2000		1,1	12	063521210260	**MSN2098**
1.8 T	AGU, ARX, AUM	110	05/2000 → 05/2005		1,1	12	063521210260	**MSN2098**
1.8 T	AGU, ARX, AUM	110	09/2000 → 04/2001		1,1	12	063521210280	**MSN2099**
1.8 T	AGU, ARX, AUM	110	05/2000 → 05/2005		2,0	12	063521250480	**MSN2113**
1.9 TDI	AGR	66	07/2004 → 05/2005	AUTO	2,0	12	063521250350	**MSN2111**
1.9 TDI	AGR	66	07/2004 → 05/2005	MAN	2,0	12	063521250420	**MSN2112**
1.9 TDI	AHF, ASV	81	05/1999 → 06/2001	AUTO	2,0	12	063521250350	**MSN2111**
1.9 TDI	AHF, ASV	81	05/1999 → 06/2001	MAN	2,0	12	063521250420	**MSN2112**
1.9 TDI	AJM, AUY	85	01/2000 → 04/2001		2,0	12	063521250480	**MSN2113**
1.9 TDI	ARL	110	05/2002 → 05/2005		2,0	12	063521250480	**MSN2113**
1.9 TDI	ASZ	96	01/2001 → 01/2002		2,0	12	063521250480	**MSN2113**
1.9 TDI	ATD, AXR	74	09/2000 → 05/2005	5	2,0	12	063521250420	**MSN2112**
1.9 TDI	ATD, AXR	74	09/2000 → 05/2005	6	2,0	12	063521250480	**MSN2113**
1.9 TDI 4motion	AJM, AUY	85	05/1999 → 04/2001		2,0	12	063521250480	**MSN2113**
1.9 TDI 4motion	ARL	110	05/2002 → 05/2005		2,0	12	063521250480	**MSN2113**

		kW			kW	V	LONG	SHORT
VW								
BORA Station wagon (1J6)								
1.9 TDI 4motion	ASZ	96	01/2001 → 01/2002		2,0	12	063521250480	**MSN2113**
1.9 TDI 4motion	ATD	74	09/2000 → 05/2005	5	2,0	12	063521250420	**MSN2112**
1.9 TDI 4motion	ATD	74	09/2000 → 05/2005	6	2,0	12	063521250480	**MSN2113**
2.0	APK, AQY, AZG, AZH, AZJ	85	05/1999 → 05/2005	MAN	1,1	12	063521210260	**MSN2098**
2.0	APK, AQY, AZG, AZH, AZJ	85	05/1999 → 05/2005	AUTO	1,1	12	063521210280	**MSN2099**
2.0 4motion	AZH, AZJ	85	04/2000 → 05/2005	MAN	1,1	12	063521210260	**MSN2098**
2.0 4motion	AZH, AZJ	85	04/2000 → 05/2005	AUTO	1,1	12	063521210280	**MSN2099**
2.3 V5	AGZ	110	05/1999 → 10/2000		2,0	12	063521250350	**MSN2111**
2.3 V5	AQN	125	10/2000 → 05/2005		2,0	12	063521250480	**MSN2113**
2.3 V5 4motion	AGZ	110	05/2000 → 10/2000		2,0	12	063521250350	**MSN2111**
2.3 V5 4motion	AQN	125	10/2000 → 05/2005		2,0	12	063521250480	**MSN2113**
2.8 V6 4motion	AQP, AUE, BDE	150	01/2000 → 05/2005		2,0	12	063521250480	**MSN2113**
CADDY I (14)								
1.6	EW	55	08/1983 → 07/1992		0,9	12	063521120380	**MSN2089**
CADDY II Furgonato (9K9A)								
1.4	AUA	55	09/2000 → 06/2003		1,1	12	063521071030	**MSN2073**
1.7 SDI	AHB	42	07/1996 → 09/2000		2,0	12	063521250350	**MSN2111**
1.9 D	1Y	47	11/1995 → 06/2003		2,0	12	063521250350	**MSN2111**
1.9 SDI	AEY, AYQ	47	11/1995 → 06/2003		2,0	12	063521250350	**MSN2111**
1.9 TDI	1Z, AHU, ALH	66	09/1996 → 01/2004		2,0	12	063521250420	**MSN2112**
60 1.4	AEX, APQ, AUD	44	11/1995 → 06/2003		1,1	12	063521071030	**MSN2073**
75 1.6	1F	55	11/1995 → 05/1997		1,1	12	063521210280	**MSN2099**
75 1.6	AEE	55	06/1997 → 09/2000		1,1	12	063521071030	**MSN2073**
CADDY II Station wagon (9K9B)								
1.4	AEX, AKV, APQ, AUD	44	11/1995 → 06/2003		1,1	12	063521071030	**MSN2073**
1.4 16V	AUA	55	09/2000 → 06/2003		1,1	12	063521071030	**MSN2073**
1.6	1F	55	11/1995 → 05/1997		1,1	12	063521210280	**MSN2099**
1.6	AEE	55	06/1997 → 09/2000		1,1	12	063521071030	**MSN2073**
1.7 SDI	AHB	42	07/1996 → 09/2000		2,0	12	063521250350	**MSN2111**
1.9 D	1Y	47	11/1995 → 06/2003		2,0	12	063521250350	**MSN2111**
1.9 SDI	AEY, AYQ	47	11/1995 → 06/2003		2,0	12	063521250350	**MSN2111**
1.9 TDI	AHU, ALE, ALH	66	10/1996 → 01/2004		2,0	12	063521250420	**MSN2112**
CADDY III Furgonato (2KA, 2KH, 2CA, 2CH)								
1.2 TSI	CBZA	63	09/2010 →		1,0	12	063521204100	**MSN2096**
1.2 TSI	CBZB	77	09/2010 →		1,0	12	063521204100	**MSN2096**
1.4	BCA	55	03/2004 → 05/2006		1,0	12	063521204100	**MSN2096**
1.4 16V	BUD	59	05/2006 → 05/2008		1,0	12	063521204100	**MSN2096**
1.6	BGU, BSE, BSF	75	04/2004 → 05/2008		1,0	12	063521204100	**MSN2096**

		kW		i	kW	V	LONG	SHORT
VW								
CADDY III Furgonato (2KA, 2KH, 2CA, 2CH)								
1.9 TDI	BJB, BLS	77	04/2004 → 05/2008		1,7	12	063521230120	**MSN2104**
1.9 TDI	BSU	55	09/2005 → 05/2008		1,7	12	063521230120	**MSN2104**
1.9 TDI 4motion	BLS	77	11/2008 → 08/2010		1,7	12	063521230140	**MSN2105**
2.0 EcoFuel	BSX	80	04/2006 → 05/2008		1,0	12	063521204100	**MSN2096**
2.0 TDI	BMM	103	09/2007 → 05/2008		1,7	12	063521230140	**MSN2105**
CADDY III Station wagon (2KB, 2KJ)								
1.2 TSI	CBZA	63	09/2010 →		1,0	12	063521204100	**MSN2096**
1.2 TSI	CBZB	77	09/2010 →		1,0	12	063521204100	**MSN2096**
1.4	BCA	55	03/2004 → 05/2006		1,0	12	063521204100	**MSN2096**
1.4 16V	BUD	59	05/2006 → 05/2008		1,0	12	063521204100	**MSN2096**
1.6	BGU, BSE, BSF	75	04/2004 → 05/2008		1,0	12	063521204100	**MSN2096**
1.9 TDI	BJB, BLS	77	04/2004 → 05/2008		1,7	12	063521230120	**MSN2104**
1.9 TDI	BSU	55	09/2005 → 05/2008		1,7	12	063521230120	**MSN2104**
1.9 TDI 4motion	BLS	77	05/2008 → 05/2008		1,7	12	063521230120	**MSN2104**
1.9 TDI 4motion	BLS	77	05/2008 →		1,7	12	063521230140	**MSN2105**
2.0 EcoFuel	BSX	80	04/2006 → 05/2008		1,0	12	063521204100	**MSN2096**
2.0 TDI	BMM	103	09/2007 → 05/2008		1,7	12	063521230140	**MSN2105**
CORRADO (53I)								
2.9 VR6	ABV	140	08/1991 → 07/1995		2,0	12	063521250350	**MSN2111**
EOS (1F7, 1F8)								
1.6 FSI	BLF	85	06/2006 → 05/2008		1,0	12	063521204100	**MSN2096**
2.0 FSI	BVY, BVZ	110	05/2006 → 05/2008		1,1	12	063521214080	**MSN2102**
2.0 TDI	BMM	103	06/2006 → 05/2008	MAN	1,7	12	063521230140	**MSN2105**
2.0 TDI	BMM	103	06/2006 → 05/2008	AUTO	1,7	12	063521230160	**MSN2106**
2.0 TFSI	BPY, BWA, CAWB, CBFA, CCTA, CCZA	147	05/2006 → 11/2010		1,1	12	063521214020	**MSN2101**
2.0 TFSI	BPY, BWA, CAWB, CBFA, CCTA, CCZA	147	03/2006 →		1,0	12	063521214120	**MSN2103**
2.0 TFSI	BPY, BWA, CAWB, CBFA, CCTA, CCZA	147	05/2006 →		1,7	12	063521230160	**MSN2106**
2.0 TSI	CCZB	155	11/2009 → 11/2010		1,1	12	063521214020	**MSN2101**
2.0 TSI	CCZB	155	11/2009 → 11/2010		1,0	12	063521214120	**MSN2103**
3.2 V6	BUB, CBRA	184	06/2006 →		1,7	12	063521230160	**MSN2106**
FOX (5Z1, 5Z3)								
1.2	BMD, CHFB	40	04/2005 →		0,9	12	063521204000	**MSN2093**
1.2	CHFA	44	09/2010 →		0,9	12	063521204000	**MSN2093**
1.4	BKR	55	04/2005 →		0,9	12	063521204000	**MSN2093**
GOLF I Cabriolet (155)								
1.6	EW, HN	55	08/1983 → 04/1992		0,9	12	063521120380	**MSN2089**
GOLF II (19E, 1G1)								
1.6	ABN, EZ, HM	55	08/1983 → 07/1991		0,9	12	063521120380	**MSN2089**
1.6	EZA, PN	51	08/1986 → 07/1991		0,9	12	063521120380	**MSN2089**

		kW			kW	V	LONG	SHORT
VW								
GOLF II (19E, 1G1)								
1.6	PN	51	10/1986 → 07/1992		0,9	12	063521120380	**MSN2089**
1.6	RF	53	02/1986 → 10/1991		0,9	12	063521120380	**MSN2089**
GOLF III (1H1)								
1.4	ABD, AEX	40	10/1992 → 07/1995		1,1	12	063521071030	**MSN2073**
1.4	ABD, AEX	44	10/1992 → 07/1995		1,1	12	063521071030	**MSN2073**
1.4	ABD, AEX	44	11/1991 → 09/1992		0,8	12	063521130070	**MSN2092**
1.4	ABD, AEX	40	11/1991 → 09/1992		0,8	12	063521130070	**MSN2092**
1.6	ABU, AEA, AEE	55	09/1992 → 09/1994		1,1	12	063521071030	**MSN2073**
1.6	AEK, AFT, AKS	74	12/1995 → 08/1997		1,1	12	063521210280	**MSN2099**
1.8	AAM	55	08/1995 → 08/1997		1,1	12	063521210280	**MSN2099**
1.8	ABS, ACC, ADZ	66	08/1995 → 08/1997		1,1	12	063521210280	**MSN2099**
1.9 D	1Y	48	11/1991 → 08/1997		2,0	12	063521250350	**MSN2111**
1.9 SDI	AEY	47	07/1995 → 08/1997		2,0	12	063521250350	**MSN2111**
1.9 TD,GTD	AAZ	55	11/1991 → 08/1997		2,0	12	063521250350	**MSN2111**
1.9 TDI	1Z, AHU, ALE	66	09/1993 → 08/1997		2,0	12	063521250350	**MSN2111**
1.9 TDI	AFN	81	04/1996 → 08/1997	AUTO	2,0	12	063521250350	**MSN2111**
1.9 TDI	AFN	81	04/1996 → 08/1997	MAN	2,0	12	063521250420	**MSN2112**
1.9 TDI Syncro (1HX1)	1Z, AHU, ALE	66	10/1995 → 08/1997		2,0	12	063521250420	**MSN2112**
2.0	2E, ABA, ADY, AGG, AKR	85	07/1995 → 08/1997		1,1	12	063521210280	**MSN2099**
2.0 GL	AEP	79	08/1995 → 09/1997		1,1	12	063521210280	**MSN2099**
2.0 GTI 16V	ABF	110	08/1992 → 08/1997		1,1	12	063521210280	**MSN2099**
2.8 VR6	AAA	128	01/1992 → 08/1997		2,0	12	063521250350	**MSN2111**
GOLF III Cabriolet (1E7)								
1.6	AEK, AFT, AKS	74	10/1994 → 04/1998		1,1	12	063521210280	**MSN2099**
1.8	AAM	55	08/1995 → 04/1998		1,1	12	063521210280	**MSN2099**
1.8	ABS, ADZ	66	07/1993 → 05/1998		1,1	12	063521210280	**MSN2099**
1.9 TDI	1Z, AHU, ALE	66	08/1995 → 04/1998		2,0	12	063521250420	**MSN2112**
1.9 TDI	AFN	81	09/1996 → 04/1998		2,0	12	063521250420	**MSN2112**
2.0	2E, ADY, AGG, AKR	85	07/1995 → 04/1998		1,1	12	063521210280	**MSN2099**
GOLF III Variant (1H5)								
1.4	ABD	40	07/1993 → 07/1995		1,1	12	063521071030	**MSN2073**
1.4	ABD	40	07/1993 → 07/1995		0,8	12	063521130070	**MSN2092**
1.4	ABD, AEX, APQ	44	07/1993 → 07/1995		1,1	12	063521071030	**MSN2073**
1.4	ABD, AEX, APQ	44	07/1993 → 07/1995		0,8	12	063521130070	**MSN2092**
1.4	ABD, AEX, APQ	44	07/1993 → 02/1999		1,1	12	063521210280	**MSN2099**
1.6	AEK, AFT, AKS	74	08/1995 → 02/1999		1,1	12	063521210280	**MSN2099**
1.8	AAM, ANN	55	08/1995 → 02/1999		1,1	12	063521210280	**MSN2099**
1.8	ABS, ADZ, ANP	66	08/1995 → 02/1999		1,1	12	063521210280	**MSN2099**
1.9 D	1Y	48	07/1993 → 02/1999		2,0	12	063521250350	**MSN2111**
1.9 SDI	AEY	47	07/1995 → 02/1999		2,0	12	063521250350	**MSN2111**
1.9 TD	AAZ	55	07/1993 → 02/1999		2,0	12	063521250350	**MSN2111**
1.9 TDI	1Z, AHU, ALE	66	03/1994 → 02/1999		2,0	12	063521250350	**MSN2111**

		kW			kW	V	LONG	SHORT
VW								
GOLF III Variant (1H5)								
1.9 TDI	1Z, AHU, ALE	66	03/1994 → 04/1999		2,0	12	063521250420	**MSN2112**
1.9 TDI	AFN	81	04/1996 → 02/1999	AUTO	2,0	12	063521250350	**MSN2111**
1.9 TDI	AFN	81	04/1996 → 02/1999	MAN	2,0	12	063521250420	**MSN2112**
1.9 TDI Syncro	1Z, AHU, ALE	66	10/1995 → 12/1997		2,0	12	063521250420	**MSN2112**
2.0	2E, ADY, AGG, AKR	85	07/1995 → 02/1999		1,1	12	063521210280	**MSN2099**
GOLF IV (1J1)								
1.4 16V	AHW, AKQ, APE, AXP, BCA	55	01/1998 → 05/2001		1,1	12	063521210280	**MSN2099**
1.6	AEH, AKL, APF	74	01/1998 → 02/2000		1,1	12	063521210280	**MSN2099**
1.6	AVU, BFQ, BJH	75	09/2000 → 05/2004		1,1	12	063521210280	**MSN2099**
1.6	BAH	74	02/2001 → 06/2001		1,1	12	063521210160	**MSN2097**
1.6 16V	ATN, AUS, AZD, BCB	77	02/2000 → 05/2004		1,1	12	063521210280	**MSN2099**
1.6 FSI	BAD	81	07/2002 → 05/2004		0,9	12	063521204000	**MSN2093**
1.6 FSI	BAD	81	01/2002 → 06/2002		1,1	12	063521210160	**MSN2097**
1.8	AGN, BAF	92	04/1999 → 10/2000		1,1	12	063521210260	**MSN2098**
1.8	AGN, BAF	92	01/1998 → 10/2000		1,1	12	063521210280	**MSN2099**
1.8 4motion	AGN	92	07/1998 → 10/2000	MAN	1,1	12	063521210260	**MSN2098**
1.8 4motion	AGN	92	07/1998 → 10/2000	AUTO	1,1	12	063521210280	**MSN2099**
1.8 T	AGU, AQA, ARZ, AUM, AWD	110	01/1998 → 05/2003		1,1	12	063521210280	**MSN2099**
1.8 T	AGU, AQA, ARZ, AUM, AWD	110	10/1997 → 05/2003		2,0	12	063521250480	**MSN2113**
1.9 SDI	AGP, AQM	50	10/1997 → 05/2004		2,0	12	063521250350	**MSN2111**
1.9 TDI	AGR, ALH	66	10/1997 → 05/2004		2,0	12	063521250350	**MSN2111**
1.9 TDI	AGR, ALH	66	02/2002 → 05/2004		2,0	12	063521250420	**MSN2112**
1.9 TDI	AHF, ASV	81	10/1997 → 05/2004		2,0	12	063521250350	**MSN2111**
1.9 TDI	AHF, ASV	81	10/1997 → 01/2002		2,0	12	063521250420	**MSN2112**
1.9 TDI	AJM, AUY	85	05/1999 → 06/2001		2,0	12	063521250480	**MSN2113**
1.9 TDI	ARL	110	09/2000 → 05/2004		2,0	12	063521250480	**MSN2113**
1.9 TDI	ASZ	96	04/2001 → 05/2004		2,0	12	063521250480	**MSN2113**
1.9 TDI	ATD, AXR	74	09/2000 → 05/2004	5	2,0	12	063521250420	**MSN2112**
1.9 TDI	ATD, AXR	74	09/2000 → 05/2004	6	2,0	12	063521250480	**MSN2113**
1.9 TDI 4motion	AGR, ALH	66	07/1998 → 04/2002		2,0	12	063521250350	**MSN2111**
1.9 TDI 4motion	AGR, ALH	66	02/2002 → 04/2002		2,0	12	063521250420	**MSN2112**
1.9 TDI 4motion	AJM, AUY	85	09/1999 → 06/2001		2,0	12	063521250480	**MSN2113**
1.9 TDI 4motion	ARL	110	09/2000 → 01/2002		2,0	12	063521250480	**MSN2113**
1.9 TDI 4motion	ASZ	96	04/2001 → 01/2002		2,0	12	063521250480	**MSN2113**
1.9 TDI 4motion	ATD	74	09/2000 → 06/2005		2,0	12	063521250420	**MSN2112**

		kW			kW	V	LONG	SHORT
VW								
GOLF IV (1J1)								
1.9 TDI 4motion	ATD	74	02/2002 → 06/2005		2,0	12	063521250480	**MSN2113**
2.0	APK, AQY, AZG, AZJ	85	08/1998 → 05/2004	MAN	1,1	12	063521210260	**MSN2098**
2.0	APK, AQY, AZG, AZJ	85	08/1998 → 05/2004	AUTO	1,1	12	063521210280	**MSN2099**
2.0 4motion	AZH, AZJ	85	05/2001 → 06/2001		1,1	12	063521210260	**MSN2098**
2.0 4motion	AZH, AZJ	85	05/2001 → 06/2005		1,1	12	063521210280	**MSN2099**
2.3 V5	AGZ	110	10/1997 → 10/2000		2,0	12	063521250350	**MSN2111**
2.3 V5	AQN	125	10/2000 → 05/2004		2,0	12	063521250480	**MSN2113**
2.3 V5 4motion	AGZ	110	12/1998 → 10/2000		2,0	12	063521250350	**MSN2111**
2.3 V5 4motion	AQN	125	02/2002 → 06/2005		2,0	12	063521250480	**MSN2113**
2.8 V6 4motion	AQP, AUE, BDE	150	05/1999 → 01/2002		2,0	12	063521250480	**MSN2113**
3.2 R32 4motion	BFH, BML	177	09/2002 → 05/2004		1,7	12	063521230160	**MSN2106**
3.2 R32 4motion	BFH, BML	177	09/2002 → 05/2004		2,0	12	063521250480	**MSN2113**
GOLF IV Cabriolet (1E7)								
1.6	AFT, AKS	74	06/1998 → 10/2000		1,1	12	063521210280	**MSN2099**
1.8	AAM, ANN	55	06/1998 → 10/2000		1,1	12	063521210280	**MSN2099**
1.8	ADZ, ANP	66	06/1998 → 10/2000		1,1	12	063521210280	**MSN2099**
1.9 TDI	AFN, AVG	81	06/1998 → 10/2000		2,0	12	063521250420	**MSN2112**
1.9 TDI	AHU, ALE	66	06/1998 → 12/2001		2,0	12	063521250420	**MSN2112**
2.0	AGG, AKR, ATU, AWF, AWG	85	06/1998 → 06/2002		1,1	12	063521210280	**MSN2099**
GOLF IV Variant (1J5)								
1.4 16V	AHW, AKQ, APE, AXP, BCA	55	05/1999 → 10/2001		1,1	12	063521210280	**MSN2099**
1.6	AEH, AKL, APF	74	05/1999 → 02/2000		1,1	12	063521210280	**MSN2099**
1.6	AVU	75	09/2000 → 06/2006		1,1	12	063521210280	**MSN2099**
1.6 16V	ATN, AUS, AZD, BCB	77	02/2000 → 06/2006		1,1	12	063521210280	**MSN2099**
1.6 FSI	BAD	81	07/2002 → 06/2006		0,9	12	063521204000	**MSN2093**
1.6 FSI	BAD	81	01/2002 → 06/2002		1,1	12	063521210160	**MSN2097**
1.8 4motion	AGN	92	05/1999 → 10/2000	MAN	1,1	12	063521210260	**MSN2098**
1.8 4motion	AGN	92	05/1999 → 10/2000	AUTO	1,1	12	063521210280	**MSN2099**
1.8 T	AGU, AQA, ARZ, AUM, AWD	110	05/2000 → 05/2003	MAN	1,1	12	063521210260	**MSN2098**
1.8 T	AGU, AQA, ARZ, AUM, AWD	110	05/2000 → 05/2003	5	1,1	12	063521210280	**MSN2099**
1.8 T	AGU, AQA, ARZ, AUM, AWD	110	02/2002 → 06/2006		2,0	12	063521250480	**MSN2113**
1.9 SDI	AGP, AQM	50	05/1999 → 06/2006		2,0	12	063521250350	**MSN2111**
1.9 TDI	AGR, ALH	66	05/1999 → 05/2006		2,0	12	063521250350	**MSN2111**
1.9 TDI	AGR, ALH	66	02/2002 → 05/2006		2,0	12	063521250420	**MSN2112**
1.9 TDI	AHF, ASV	81	05/1999 → 06/2001		2,0	12	063521250350	**MSN2111**

		kW			kW	V	LONG	SHORT
VW								
GOLF IV Variant (1J5)								
1.9 TDI	AJM, AUY	85	08/1999 → 06/2001		2,0	12	063521250480	**MSN2113**
1.9 TDI	ASZ	96	04/2001 → 06/2006		2,0	12	063521250480	**MSN2113**
1.9 TDI	ATD, AXR	74	09/2000 → 06/2006	5	2,0	12	063521250420	**MSN2112**
1.9 TDI	ATD, AXR	74	09/2000 → 06/2006	6	2,0	12	063521250480	**MSN2113**
1.9 TDI 4motion	AGR, ALH	66	05/1999 → 04/2002		2,0	12	063521250350	**MSN2111**
1.9 TDI 4motion	AGR, ALH	66	02/2002 → 04/2002		2,0	12	063521250420	**MSN2112**
1.9 TDI 4motion	AJM	85	05/1999 → 06/2001		2,0	12	063521250480	**MSN2113**
1.9 TDI 4motion	ASZ	96	04/2001 → 06/2006		2,0	12	063521250480	**MSN2113**
1.9 TDI 4motion	ATD	74	09/2000 → 06/2006	5	2,0	12	063521250420	**MSN2112**
1.9 TDI 4motion	ATD	74	09/2000 → 06/2006	6	2,0	12	063521250480	**MSN2113**
2.0	APK, AQY, AZJ	85	05/1999 → 06/2006	MAN	1,1	12	063521210260	**MSN2098**
2.0	APK, AQY, AZJ	85	05/1999 → 06/2006	AUTO	1,1	12	063521210280	**MSN2099**
2.0 4motion	AZH, AZJ	85	10/2000 → 06/2006		1,1	12	063521210260	**MSN2098**
2.0 4motion	AZH, AZJ	85	05/2001 → 06/2006		1,1	12	063521210280	**MSN2099**
2.0 Bi-Fuel	BEH	85	05/2002 → 06/2006		1,1	12	063521210260	**MSN2098**
2.3 V5	AGZ	110	05/1999 → 02/2001		2,0	12	063521250350	**MSN2111**
2.3 V5	AQN	125	10/2000 → 06/2006		2,0	12	063521250480	**MSN2113**
2.3 V5 4motion	AGZ	110	05/1999 → 02/2001		2,0	12	063521250350	**MSN2111**
2.3 V5 4motion	AQN	125	10/2000 → 06/2006		2,0	12	063521250480	**MSN2113**
2.8 V6 4motion	AQP, AUE, BDE	150	05/1999 → 06/2006		2,0	12	063521250480	**MSN2113**
GOLF V (1K1)								
1.4 16V	BCA	55	10/2003 → 05/2006		1,0	12	063521204060	**MSN2094**
1.4 16V	BUD	59	05/2006 → 11/2008		1,0	12	063521204060	**MSN2094**
1.4 FSI	BKG, BLN	66	10/2003 → 05/2006		1,0	12	063521204060	**MSN2094**
1.4 TSI	BLG	125	11/2005 →		1,1	12	063521214080	**MSN2102**
1.4 TSI	BLG	125	11/2005 → 11/2008		1,0	12	063521214120	**MSN2103**
1.4 TSI	BMY	103	05/2006 →		1,1	12	063521214080	**MSN2102**
1.4 TSI	BMY	103	05/2006 → 11/2008		1,0	12	063521214120	**MSN2103**
1.4 TSI	CAXA	90	07/2007 →		1,1	12	063521214080	**MSN2102**
1.6	BGU, BSE, BSF	75	01/2004 → 11/2008		1,0	12	063521204080	**MSN2095**
1.6	BGU, BSE, BSF	75	01/2004 → 11/2008		1,1	12	063521214020	**MSN2101**
1.6 FSI	BAG, BLF, BLP	85	10/2003 → 07/2008		1,0	12	063521204060	**MSN2094**
1.6 FSI	BAG, BLF, BLP	85	10/2003 → 07/2008		1,1	12	063521214020	**MSN2101**
1.6 MultiFuel	CCSA	75	11/2007 → 11/2008		1,0	12	063521204080	**MSN2095**
1.9 TDI	BKC, BLS, BXE	77	10/2003 →	6	1,7	12	063521230140	**MSN2105**
1.9 TDI	BKC, BLS, BXE	77	10/2003 →	AUTO	1,7	12	063521230160	**MSN2106**

		kW			kW	V	LONG	SHORT
VW								
GOLF V (1K1)								
1.9 TDI	BRU, BXF, BXJ	66	05/2004 → 11/2008		1,7	12	063521230120	**MSN2104**
1.9 TDI 4motion	BKC, BLS, BXE	77	02/2006 →		1,7	12	063521230120	**MSN2104**
1.9 TDI 4motion	BKC, BLS, BXE	77	08/2004 →		1,7	12	063521230160	**MSN2106**
2.0	BHY	85	08/2006 → 11/2008		1,1	12	063521214020	**MSN2101**
2.0 D		55	01/2004 →		1,7	12	063521230180	**MSN2107**
2.0 FSI	AXW, BLR, BLX, BLY, BVX, BVY,BVZ	110	01/2005 → 11/2005		1,1	12	063521214020	**MSN2101**
2.0 FSI	AXW, BLR, BLX, BLY, BVX, BVY,BVZ	110	11/2005 →		1,1	12	063521214080	**MSN2102**
2.0 FSI 4motion	BLX, BVX	110	08/2004 → 11/2005		1,1	12	063521214020	**MSN2101**
2.0 FSI 4motion	BLX, BVX	110	11/2005 → 11/2005		1,1	12	063521214080	**MSN2102**
2.0 GTI	AXX, BPY, BWA, CAWB, CBFA, CCTA	147	10/2004 → 05/2008		1,1	12	063521214020	**MSN2101**
2.0 GTI	AXX, BPY, BWA, CAWB, CBFA, CCTA	147	10/2004 → 05/2008		1,0	12	063521214120	**MSN2103**
2.0 GTI	BYD	169	09/2006 → 11/2008		1,1	12	063521214020	**MSN2101**
2.0 GTI	BYD	169	09/2006 → 11/2008		1,0	12	063521214120	**MSN2103**
2.0 SDI	BDK	55	01/2004 → 11/2008		1,7	12	063521230180	**MSN2107**
2.0 TDI	AZV, CBDA	100	10/2003 →		1,7	12	063521230160	**MSN2106**
2.0 TDI	BMM	103	12/2004 →		1,7	12	063521230160	**MSN2106**
2.0 TDI	BMN	125	11/2005 → 11/2008		1,7	12	063521230140	**MSN2105**
2.0 TDI 16V	BKD	103	10/2003 →		1,7	12	063521230160	**MSN2106**
2.0 TDI 16V 4motion	BKD	103	08/2004 →		1,7	12	063521230160	**MSN2106**
2.0 TDI 4motion	BMM	103	12/2004 →		1,7	12	063521230160	**MSN2106**
3.2	BUB	184	09/2005 → 07/2007		1,7	12	063521230140	**MSN2105**
3.2 R32 4motion	BUB, CBR, CBRA	184	11/2005 → 05/2007	MAN	1,7	12	063521230140	**MSN2105**
3.2 R32 4motion	BUB, CBR, CBRA	184	11/2005 → 05/2007	AUTO	1,7	12	063521230160	**MSN2106**
GOLF V Variant (1K5)								
1.4	BUD	59	08/2007 → 11/2008		1,0	12	063521204060	**MSN2094**
1.4 TSI	BLG	125	06/2007 → 06/2008		1,1	12	063521214080	**MSN2102**
1.4 TSI	BLG	125	06/2007 → 06/2008		1,0	12	063521214120	**MSN2103**
1.4 TSI	BMY	103	06/2007 →		1,1	12	063521214080	**MSN2102**
1.4 TSI	BMY	103	06/2007 → 06/2008		1,0	12	063521214120	**MSN2103**
1.4 TSI	CAXA	90	08/2007 →		1,1	12	063521214080	**MSN2102**
1.6	BSE, BSF, CCSA	75	06/2007 →		1,0	12	063521204080	**MSN2095**
1.6	BSE, BSF, CCSA	75	06/2007 → 11/2008		1,1	12	063521214020	**MSN2101**
1.6 MultiFuel	CCSA	75	01/2008 → 11/2008		1,0	12	063521204080	**MSN2095**
1.9 TDI	BKC, BLS, BXE	77	06/2007 →	MAN	1,7	12	063521230120	**MSN2104**
1.9 TDI	BKC, BLS, BXE	77	06/2007 →	AUTO	1,7	12	063521230160	**MSN2106**
1.9 TDI 4motion	BLS	77	01/2008 →		1,7	12	063521230160	**MSN2106**

		kW			kW	V	LONG	SHORT
VW								
GOLF V Variant (1K5)								
2.0	BWA, CAWB, CCTA	147	06/2007 → 03/2009		1,1	12	063521214020	**MSN2101**
2.0	BWA, CAWB, CCTA	147	06/2007 → 03/2009		1,0	12	063521214120	**MSN2103**
2.0 TDI	AZV	100	06/2007 → 05/2008		1,7	12	063521230140	**MSN2105**
2.0 TDI	BMM	103	06/2007 →		1,7	12	063521230160	**MSN2106**
2.0 TDI 16V	BKD, CBDB	103	06/2007 → 05/2008		1,7	12	063521230140	**MSN2105**
2.0 TDI 4motion	AZV	100	06/2007 → 06/2009		1,7	12	063521230140	**MSN2105**
GOLF VI (5K1)								
1.2 TSI	CBZA	63	05/2010 →		1,0	12	063521204100	**MSN2096**
1.2 TSI	CBZB	77	05/2009 →		1,0	12	063521204100	**MSN2096**
1.4	CGGA	59	10/2008 →		1,0	12	063521204060	**MSN2094**
1.4 TSI	CAVD	118	11/2008 →		1,1	12	063521214080	**MSN2102**
1.4 TSI	CAXA	90	10/2008 →		1,1	12	063521214080	**MSN2102**
1.6	BSE, BSF, CCSA, CMXA	75	10/2008 →		1,0	12	063521204080	**MSN2095**
1.6 BiFuel	CHGA	75	03/2009 →		1,0	12	063521204080	**MSN2095**
1.6 MultiFuel	CCSA, CMXA	75	10/2008 →		1,0	12	063521204080	**MSN2095**
2.0 R 4motion	CDLC	188	11/2009 →		1,1	12	063521214020	**MSN2101**
2.0 R 4motion	CDLC	188	11/2009 →		1,0	12	063521214120	**MSN2103**
2.0 R 4motion	CDLF	199	11/2009 →		1,1	12	063521214020	**MSN2101**
2.0 R 4motion	CDLF	199	11/2009 →		1,0	12	063521214120	**MSN2103**
2.0 TSI	CCZB	155	04/2009 →		1,1	12	063521214020	**MSN2101**
2.0 TSI	CCZB	155	04/2009 →		1,0	12	063521214120	**MSN2103**
GOLF VI Cabriolet								
1.2 TSI	CBZB	77	03/2011 →		1,0	12	063521204100	**MSN2096**
GOLF VI Variant (AJ5)								
1.2 TSI	CBZB	77	08/2009 →		1,0	12	063521204100	**MSN2096**
1.4	BUD, CGGA	59	07/2009 →		1,0	12	063521204060	**MSN2094**
1.6	BSE, BSF, CCSA, CMXA	75	07/2009 →		1,0	12	063521204080	**MSN2095**
1.6	BSE, BSF, CCSA, CMXA	75	07/2009 →		1,1	12	063521214020	**MSN2101**
1.6 MultiFuel	CMXA	75	07/2010 →		1,0	12	063521204080	**MSN2095**
GOLF PLUS (5M1, 521)								
1.2 TSI	CBZA	63	05/2010 →		1,0	12	063521204100	**MSN2096**
1.2 TSI	CBZB	77	11/2009 →		1,0	12	063521204100	**MSN2096**
1.4 16V	BCA	55	01/2005 → 05/2006		1,0	12	063521204060	**MSN2094**
1.4 16V	BUD, CGGA	59	05/2006 →		1,0	12	063521204060	**MSN2094**
1.4 FSI	BLN	66	07/2005 → 05/2006		1,0	12	063521204060	**MSN2094**
1.4 TSI	BLG	125	05/2006 → 06/2008		1,1	12	063521214080	**MSN2102**
1.4 TSI	BLG	125	05/2006 → 06/2008		1,0	12	063521214120	**MSN2103**
1.4 TSI	BMY	103	05/2006 → 06/2008		1,1	12	063521214080	**MSN2102**
1.4 TSI	BMY	103	05/2006 → 06/2008		1,0	12	063521214120	**MSN2103**
1.4 TSI	CAVD, CNWA	118	06/2008 →		1,1	12	063521214080	**MSN2102**
1.4 TSI	CAXA	90	07/2007 →		1,1	12	063521214080	**MSN2102**
1.6	BSE, BSF, CCSA, CMXA	75	11/2007 →		1,0	12	063521204080	**MSN2095**
1.6	BSE, BSF, CCSA, CMXA	75	05/2005 → 12/2008		1,1	12	063521214020	**MSN2101**
1.6 BiFuel	CHGA	75	05/2009 →		1,0	12	063521204080	**MSN2095**

		kW		i	kW	V	LONG	SHORT
VW								
GOLF PLUS (5M1, 521)								
1.6 FSI	BLF	85	01/2005 → 01/2009		1,0	12	063521204060	**MSN2094**
1.6 FSI	BLF	85	01/2005 → 01/2009		1,1	12	063521214020	**MSN2101**
1.6 MultiFuel	CCSA, CMXA	75	11/2007 →		1,0	12	063521204080	**MSN2095**
1.9 TDI	BKC, BLS, BXE	77	01/2005 → 01/2009	MAN	1,7	12	063521230120	**MSN2104**
1.9 TDI	BKC, BLS, BXE	77	01/2005 → 01/2009	AUTO	1,7	12	063521230160	**MSN2106**
1.9 TDI	BRU, BXF, BXJ	66	05/2005 → 01/2009		1,7	12	063521230120	**MSN2104**
2.0 FSI	BLR, BLY, BVY, BVZ	110	05/2005 → 06/2008	AUTO	1,1	12	063521214020	**MSN2101**
2.0 FSI	BLR, BLY, BVY, BVZ	110	05/2005 → 06/2008	MAN	1,1	12	063521214080	**MSN2102**
2.0 TDI	AZV, CBDA, CFHB	100	05/2005 → 05/2009		1,7	12	063521230160	**MSN2106**
2.0 TDI	BEE	96	05/2005 → 05/2006		1,7	12	063521230120	**MSN2104**
2.0 TDI	BEE	96	05/2005 → 05/2007		1,7	12	063521230140	**MSN2105**
2.0 TDI	BMM	103	12/2005 → 01/2009	MAN	1,7	12	063521230140	**MSN2105**
2.0 TDI	BMM	103	12/2005 → 01/2009	AUTO	1,7	12	063521230160	**MSN2106**
2.0 TDI 16V	BKD, CBDB, CFHC	103	01/2005 → 01/2009		1,7	12	063521230160	**MSN2106**
JETTA II (19E, 1G2)								
1.6	ABN, EZ, HM	55	01/1984 → 07/1992		0,9	12	063521120380	**MSN2089**
1.6	PN	51	10/1986 → 10/1991		0,9	12	063521120380	**MSN2089**
1.6	RF	53	03/1986 → 10/1991		0,9	12	063521120380	**MSN2089**
JETTA III (1K2)								
1.4 TSI	BLG	125	07/2006 → 06/2008		1,0	12	063521214120	**MSN2103**
1.4 TSI	BMY	103	07/2006 → 06/2008		1,0	12	063521214120	**MSN2103**
1.4 TSI	CAXA	90	07/2007 → 10/2010	AUTO	1,1	12	063521214020	**MSN2101**
1.4 TSI	CAXA	90	07/2007 → 10/2010	MAN	1,1	12	063521214080	**MSN2102**
1.6	BSE, BSF, CCSA	75	01/2008 → 06/2008		1,0	12	063521204080	**MSN2095**
1.6	BSE, BSF, CCSA	75	10/2005 → 06/2008		1,1	12	063521214020	**MSN2101**
1.6 FSI	BLF	85	09/2005 → 06/2008		1,0	12	063521204060	**MSN2094**
1.6 FSI	BLF	85	09/2005 → 06/2008		1,1	12	063521214020	**MSN2101**
1.6 MultiFuel	CCSA	75	01/2008 → 10/2010		1,0	12	063521204080	**MSN2095**
1.9 TDI	BKC, BLS, BXE	77	09/2005 → 02/2006	MAN	1,7	12	063521230120	**MSN2104**
1.9 TDI	BKC, BLS, BXE	77	09/2005 → 02/2006	AUTO	1,7	12	063521230160	**MSN2106**
2.0		147	08/2005 → 03/2008		1,1	12	063521214020	**MSN2101**

		kW			kW	V	LONG	SHORT
VW								
JETTA III (1K2)								
2.0		147	08/2005 → 03/2008		1,0	12	063521214120	**MSN2103**
2.0 TDI	AZV, CBDA	100	09/2005 → 06/2008		1,7	12	063521230140	**MSN2105**
2.0 TDI	BMM	103	10/2005 → 06/2008	MAN	1,7	12	063521230140	**MSN2105**
2.0 TDI	BMM	103	10/2005 → 06/2008	AUTO	1,7	12	063521230160	**MSN2106**
2.0 TDI	BMN, CEGA	125	10/2006 → 06/2008		1,7	12	063521230140	**MSN2105**
2.0 TDI 16V	BKD, CBDB, CJAA	103	08/2005 → 06/2008		1,7	12	063521230160	**MSN2106**
2.0 TFSI	BPY, BWA, CAWB, CBFA, CCTA, CCZA	147	10/2005 → 06/2008		1,1	12	063521214020	**MSN2101**
2.0 TFSI	BPY, BWA, CAWB, CBFA, CCTA, CCZA	147	10/2005 → 03/2008		1,0	12	063521214120	**MSN2103**
2.5 FSI	BGP, BTK	110	09/2006 → 06/2007		1,1	12	063521214080	**MSN2102**
2.5 FSI	CBTA, CBUA, CCCA	125	07/2008 → 10/2010		1,1	12	063521214020	**MSN2101**
JETTA IV (162)								
1.2 TSI	CBZB	77	02/2011 →		1,0	12	063521204100	**MSN2096**
2.0 TSI	CBFA, CCTA, CCZA	147	02/2011 →		1,1	12	063521214020	**MSN2101**
LT 28-35 II Autobus (2DM)								
2.3	AGL	105	05/1996 → 11/2001		1,1	12	063521074030	**MSN2074**
2.3		105	12/1996 → 11/2001		1,1	12	063521074030	**MSN2074**
LT 28-46 II Furgonato (2DX0AE)								
2.3	AGL	105	05/1996 → 11/2001		1,1	12	063521074030	**MSN2074**
LT 28-46 II Pianale piatto/Telaio (2DX0FE)								
2.3	AGL	105	06/1996 → 11/2001		1,1	12	063521074030	**MSN2074**
LUPO (6X1, 6E1)								
1.0	AER, ALD, ALL, ANV, AUC	37	10/1998 → 05/2000		1,1	12	063521071030	**MSN2073**
1.0	AER, ALD, ALL, ANV, AUC	37	10/1998 → 05/2000		0,9	12	063521120440	**MSN2090**
1.2 TDI 3L	ANY, AYZ	45	06/2004 → 07/2005		1,8	12	063521240260	**MSN2110**
1.4	AUD	44	10/2000 → 07/2005		1,1	12	063521071030	**MSN2073**
1.4	AUD	44	10/2000 → 07/2005		0,9	12	063521120440	**MSN2090**
1.4 16V	AFK, AQQ, AUB	74	08/1999 → 07/2005		1,1	12	063521071030	**MSN2073**
1.4 16V	AHW, AKQ, APE, AUA, BBY	55	10/1998 → 07/2005		1,1	12	063521071030	**MSN2073**
1.4 TDI	AMF	55	01/1999 → 10/2001		2,0	12	063521250420	**MSN2112**
1.6 GTI	AVY	92	09/2000 → 07/2005		0,9	12	063521204000	**MSN2093**
1.6 GTI	AVY	92	09/2000 → 09/2002		1,1	12	063521210160	**MSN2097**
1.7 SDI	AKU	44	10/1998 → 10/2001		1,8	12	063521240220	**MSN2109**
MULTIVAN V (7HM, 7HN, 7HF, 7EF, 7EM, 7EN)								
1.9 TDI	AXB	77	04/2003 → 11/2009		1,7	12	063521230120	**MSN2104**
1.9 TDI	BRR	62	01/2006 → 11/2009		1,7	12	063521230120	**MSN2104**
1.9 TDI	BRS	75	06/2006 → 11/2009		1,7	12	063521230120	**MSN2104**

		kW			kW	V	LONG	SHORT
VW								
MULTIVAN V (7HM, 7HN, 7HF, 7EF, 7EM, 7EN)								
2.0	AXA	85	09/2009 →		1,1	12	063521214080	**MSN2102**
3.2 V6	BDL	170	02/2004 → 06/2004		1,7	12	063521230140	**MSN2105**
3.2 V6	BKK, CFLA	173	02/2004 → 11/2009		1,7	12	063521230140	**MSN2105**
3.2 V6 4motion	BKK, CFLA	173	07/2004 → 11/2009		1,7	12	063521230140	**MSN2105**
NEW BEETLE (9C1, 1C1)								
1.4	BCA	55	07/2002 →		0,9	12	063521204000	**MSN2093**
1.4	BCA	55	11/2001 → 06/2002		1,1	12	063521210160	**MSN2097**
1.6	AWH	74	10/1999 → 09/2000		1,1	12	063521210280	**MSN2099**
1.6	AYD, BFS	75	06/2000 →		1,1	12	063521210260	**MSN2098**
1.6	AYD, BFS	75	06/2000 →		1,1	12	063521210280	**MSN2099**
1.6	AYD, BFS	75	06/2002 → 12/2010		2,0	12	063521250480	**MSN2113**
1.8 T	AGU, APH, AVC, AWU, AWV, BKF	110	06/2000 → 05/2001		1,1	12	063521210260	**MSN2098**
1.8 T	AGU, APH, AVC, AWU, AWV, BKF	110	10/1999 → 10/2000		2,0	12	063521250480	**MSN2113**
1.8 T	AWP, BNU	132	07/2004 → 06/2005		1,1	12	063521210260	**MSN2098**
1.9 TDI	ALH	66	01/1998 → 06/2004	AUTO	2,0	12	063521250350	**MSN2111**
1.9 TDI	ALH	66	01/1998 → 06/2004	MAN	2,0	12	063521250420	**MSN2112**
1.9 TDI	ATD, BEW	74	06/2003 → 12/2006		1,7	12	063521230160	**MSN2106**
1.9 TDI	ATD, BEW	74	06/2003 → 12/2006		2,0	12	063521250420	**MSN2112**
1.9 TDI	BSW	77	07/2005 →		2,0	12	063521250420	**MSN2112**
2.0	AEG, APK, AQY, AVH, AZG, AZJ, BEJ, BER, BEV, BHP, CBPA	85	07/2004 →		1,1	12	063521210260	**MSN2098**
2.0	AEG, APK, AQY, AVH, AZG, AZJ, BEJ, BER, BEV, BHP, CBPA	85	06/2001 → 09/2010		2,0	12	063521250480	**MSN2113**
RSI 3.2 (1C9)	AXJ	165	10/2000 → 05/2001		2,0	12	063521250480	**MSN2113**
NEW BEETLE Cabriolet (1Y7)								
1.4	BCA	55	01/2003 → 09/2010		0,9	12	063521204000	**MSN2093**
1.6	BFS	75	01/2003 → 09/2010		1,1	12	063521210260	**MSN2098**
1.8 T	AWU, AWV, BKF	110	12/2003 → 06/2005		1,1	12	063521210260	**MSN2098**
1.8 T	AWU, AWV, BKF	110	01/2003 → 06/2004		1,1	12	063521210280	**MSN2099**
1.9 TDI	AXR	74	06/2003 → 06/2005		2,0	12	063521250420	**MSN2112**
1.9 TDI	BSW	77	07/2005 → 09/2010		2,0	12	063521250420	**MSN2112**
2.0	AZJ, BDC, BEV, BGD	85	01/2003 → 10/2010	MAN	1,1	12	063521210260	**MSN2098**
2.0	AZJ, BDC, BEV, BGD	85	01/2003 → 10/2010		1,1	12	063521210280	**MSN2099**
PASSAT (362)								
1.4 TSI	CAXA	90	08/2010 →		1,7	12	063521230120	**MSN2104**

		kW			kW	V	LONG	SHORT
VW								
PASSAT (362)								
1.4 TSI EcoFuel	CDGA	110	09/2010 →		1,7	12	063521230120	**MSN2104**
1.4 TSI MultiFuel	CKMA	118	11/2010 →		1,7	12	063521230120	**MSN2104**
2.0 TSI	CCZB	155	11/2010 →		1,1	12	063521214020	**MSN2101**
PASSAT (3A2, 35I)								
1.6	AEK, AFT	74	10/1994 → 08/1996		1,1	12	063521210280	**MSN2099**
1.6 TD	RA, SB	59	08/1991 → 09/1993		2,0	12	063521250420	**MSN2112**
1.8	AAM	55	08/1990 → 08/1996		1,1	12	063521210280	**MSN2099**
1.8	ABS, ADZ, RP	66	10/1994 → 08/1996		1,1	12	063521210280	**MSN2099**
1.9 D	1Y	50	05/1989 → 09/1993	AUTO	2,0	12	063521250350	**MSN2111**
1.9 D	1Y	50	05/1989 → 09/1993		2,0	12	063521250420	**MSN2112**
1.9 TD	AAZ	55	03/1991 → 08/1996		2,0	12	063521250350	**MSN2111**
1.9 TD	AAZ	55	08/1991 → 08/1996		2,0	12	063521250420	**MSN2112**
1.9 TDI	1Z, AHU	66	10/1993 → 08/1996		2,0	12	063521250420	**MSN2112**
1.9 TDI	AFN	81	03/1996 → 08/1996	AUTO	2,0	12	063521250350	**MSN2111**
1.9 TDI	AFN	81	03/1996 → 08/1996		2,0	12	063521250420	**MSN2112**
2.0	2E, ADY, AGG	85	07/1995 → 08/1996		1,1	12	063521210280	**MSN2099**
2.0	AEP	79	03/1995 → 08/1996		1,1	12	063521210280	**MSN2099**
2.0 16V	ABF	110	01/1994 → 08/1996		1,1	12	063521210280	**MSN2099**
2.8 VR6	AAA	128	06/1991 → 08/1996		2,0	12	063521250350	**MSN2111**
PASSAT (3B2)								
1.6	ADP, AHL, ANA, ARM	74	10/1996 → 05/1998		1,1	12	063521070680	**MSN2070**
1.6	ADP, AHL, ANA, ARM	74	06/1998 → 11/2000		1,1	12	063521070730	**MSN2071**
1.8	ADR, APT, ARG	92	12/1996 → 05/1998		1,1	12	063521070680	**MSN2070**
1.8	ADR, APT, ARG	92	06/1998 → 11/2000		1,1	12	063521070730	**MSN2071**
1.8	AFY	85	01/1997 → 05/1998		1,1	12	063521070680	**MSN2070**
1.8	AFY	85	06/1998 → 11/2000		1,1	12	063521070730	**MSN2071**
1.8 Syncro/4motion	ADR, APT, ARG	92	06/1997 → 05/1998		1,1	12	063521070680	**MSN2070**
1.8 Syncro/4motion	ADR, APT, ARG	92	06/1998 → 11/2000		1,1	12	063521070730	**MSN2071**
1.8 T	AEB, ANB, APU	110	10/1996 → 05/1998		1,1	12	063521070680	**MSN2070**
1.8 T	AEB, ANB, APU	110	06/1998 → 11/2000		1,1	12	063521070730	**MSN2071**
1.9 TDI	AFN, AVG	81	08/1999 → 11/2000		1,7	12	063521101060	**MSN2028**
1.9 TDI	AFN, AVG	81	10/1996 → 11/2000		1,8	12	063521101380	**MSN2088**
1.9 TDI	AHH, AHU	66	10/1996 → 11/2000		1,7	12	063521101060	**MSN2028**
1.9 TDI	AHH, AHU	66	10/1998 → 11/2000		1,8	12	063521101380	**MSN2088**
1.9 TDI	AJM, ATJ	85	08/1998 → 11/2000		1,7	12	063521101060	**MSN2028**
1.9 TDI	AJM, ATJ	85	08/1998 → 11/2000		1,8	12	063521101380	**MSN2088**
1.9 TDI	AJM, ATJ	85	12/1999 → 11/2000		1,8	12	063521240200	**MSN2108**
1.9 TDI	AVB	74	02/2000 → 11/2000		1,7	12	063521101060	**MSN2028**
1.9 TDI	AVB	74	02/2000 → 11/2000		1,8	12	063521101380	**MSN2088**
1.9 TDI 4motion	AJM, ATJ	85	01/2000 → 11/2000		1,7	12	063521101060	**MSN2028**
1.9 TDI 4motion	AJM, ATJ	85	08/1999 → 11/2000		1,8	12	063521240200	**MSN2108**
1.9 TDI Syncro/4motion	AFN, AVG	81	06/1997 → 11/2000		1,7	12	063521101060	**MSN2028**

		kW			kW	V	LONG	SHORT
VW								
PASSAT (3B2)								
1.9 TDI Syncro/4motion	AFN, AVG	81	10/1996 → 11/2000		1,8	12	063521101380	**MSN2088**
2.0	ASU, AUZ	88	04/2000 → 08/2000		1,1	12	063521070730	**MSN2071**
PASSAT (3B3)								
1.6	ALZ	75	11/2000 → 10/2003		1,1	12	063521070730	**MSN2071**
1.6	ALZ	75	11/2003 → 05/2005		1,2	12	063521074270	**MSN2077**
1.8 T	AWM	125	02/2001 → 10/2003		1,1	12	063521070730	**MSN2071**
1.8 T	AWM	125	11/2003 → 05/2005		1,2	12	063521074270	**MSN2077**
1.8 T 20V	AWL, AWT	110	11/2000 → 10/2003		1,1	12	063521070730	**MSN2071**
1.8 T 20V	AWL, AWT	110	11/2003 → 05/2005		1,2	12	063521074270	**MSN2077**
1.9 TDI	AVB	74	11/2000 → 05/2005		1,7	12	063521101060	**MSN2028**
1.9 TDI	AVF, AWX	96	11/2000 → 05/2005		1,7	12	063521101060	**MSN2028**
1.9 TDI	AVF, AWX	96	11/2000 → 12/2003		1,8	12	063521240200	**MSN2108**
1.9 TDI 4motion	AVF	96	11/2000 → 05/2005		1,7	12	063521101060	**MSN2028**
1.9 TDI 4motion	AVF	96	11/2000 → 12/2003		1,8	12	063521240200	**MSN2108**
2.0	ALT	96	11/2001 → 10/2003		1,1	12	063521070730	**MSN2071**
2.0	ALT	96	11/2003 → 05/2005		1,2	12	063521074270	**MSN2077**
2.0	AZM, BFF	85	11/2000 → 10/2003		1,1	12	063521070730	**MSN2071**
2.0	AZM, BFF	85	11/2003 → 05/2005		1,2	12	063521074270	**MSN2077**
2.0 4motion	AZM	85	11/2000 → 10/2003		1,1	12	063521070730	**MSN2071**
2.0 4motion	AZM	85	11/2003 → 05/2005		1,2	12	063521074270	**MSN2077**
2.0 TDI	BGW, BHW	100	12/2003 → 05/2005		1,7	12	063521101060	**MSN2028**
2.0 TDI	BGW, BHW	100	12/2003 → 12/2003		1,8	12	063521240200	**MSN2108**
PASSAT (3C2)								
1.4 TSI	CAXA	90	05/2007 →		1,1	12	063521214080	**MSN2102**
1.6	BSE, BSF	75	05/2005 → 07/2010		1,0	12	063521204100	**MSN2096**
1.6 FSI	BLF	85	03/2005 → 06/2008		1,0	12	063521204100	**MSN2096**
1.6 FSI	BLF	85	03/2005 → 06/2008		1,1	12	063521214020	**MSN2101**
1.8 TSI	BZB, CDAA	118	05/2008 →		1,1	12	063521214080	**MSN2102**
1.9 TDI	BKC, BLS, BXE	77	03/2005 → 11/2008		1,7	12	063521230120	**MSN2104**
2.0 FSI	AXX, BPY, BWA, CAWB, CBFA, CCTA,CCZA	147	07/2005 →		1,1	12	063521214020	**MSN2101**
2.0 FSI	BLR, BLY, BVY, BVZ	110	03/2005 →		1,1	12	063521214080	**MSN2102**
2.0 FSI	CCTB	125	05/2008 → 07/2010		1,1	12	063521214020	**MSN2101**
2.0 FSI 4motion	BLX, BLY, BVX	110	09/2005 → 11/2005	AUTO	1,1	12	063521214020	**MSN2101**
2.0 FSI 4motion	BLX, BLY, BVX	110	09/2005 → 11/2005	MAN	1,1	12	063521214080	**MSN2102**
2.0 TDI	BMA, CBAA	100	03/2005 →		1,7	12	063521230160	**MSN2106**
2.0 TDI	BMP	103	03/2005 →		1,7	12	063521230160	**MSN2106**
2.0 TDI	BMR, CBBB	125	08/2005 →		1,7	12	063521230160	**MSN2106**
2.0 TDI	BUZ	120	08/2005 →		1,7	12	063521230160	**MSN2106**
2.0 TDI	BVE	90	08/2005 → 02/2006	MAN	1,7	12	063521230140	**MSN2105**

		kW			kW	V	LONG	SHORT
VW								
PASSAT (3C2)								
2.0 TDI	BVE	90	08/2005 → 02/2006	AUTO	1,7	12	063521230160	**MSN2106**
2.0 TDI	BWV	88	03/2006 → 05/2006		1,7	12	063521230140	**MSN2105**
2.0 TDI 16V	BKP, CBAB	103	03/2005 → 06/2008		1,7	12	063521230140	**MSN2105**
2.0 TDI 16V 4motion	BKP, CBAB	103	03/2005 → 06/2008		1,7	12	063521230140	**MSN2105**
2.0 TDI 4motion	BMP	103	03/2005 →		1,7	12	063521230160	**MSN2106**
3.2 FSI 4motion	AXZ	184	11/2005 →		1,7	12	063521230160	**MSN2106**
3.6 FSI	BLV	206	09/2005 → 07/2007		1,7	12	063521230140	**MSN2105**
3.6 FSI 4motion	BLV	206	09/2005 → 07/2010		1,7	12	063521230140	**MSN2105**
3.6 R36 4motion	BWS	220	04/2007 →		1,7	12	063521230160	**MSN2106**
PASSAT CC								
1.8 TSI	BZB, CDAA	118	06/2008 →		1,1	12	063521214080	**MSN2102**
2.0 TSI	CAWB, CBFA, CCTA, CCZA	147	06/2008 →		1,1	12	063521214020	**MSN2101**
3.6 4motion	BWS	220	08/2008 →		1,7	12	063521230160	**MSN2106**
PASSAT Variant (365)								
1.4 TSI	CAXA	90	08/2010 →		1,7	12	063521230120	**MSN2104**
1.4 TSI EcoFuel	CDGA	110	09/2010 →		1,7	12	063521230120	**MSN2104**
1.4 TSI MultiFuel	CKMA	118	11/2010 →		1,7	12	063521230120	**MSN2104**
2.0 TSI	CCZB	155	11/2010 →		1,1	12	063521214020	**MSN2101**
PASSAT Variant (3A5, 35I)								
1.6	AEK, AFT	74	10/1994 → 12/1995		1,1	12	063521210280	**MSN2099**
1.6 TD	RA, SB	59	08/1991 → 09/1993		2,0	12	063521250420	**MSN2112**
PASSAT (362)								
1.8	AAM	55	08/1990 → 03/1997		1,1	12	063521210280	**MSN2099**
1.8	ABS, ADZ, RP	66	10/1994 → 03/1997		1,1	12	063521210280	**MSN2099**
1.9 D	1Y	50	05/1989 → 09/1993	AUTO	2,0	12	063521250350	**MSN2111**
1.9 D	1Y	50	05/1989 → 09/1993		2,0	12	063521250420	**MSN2112**
1.9 TD	AAZ	55	03/1991 → 03/1997		2,0	12	063521250350	**MSN2111**
1.9 TD	AAZ	55	08/1991 → 05/1997		2,0	12	063521250420	**MSN2112**
1.9 TDI	1Z, AHU	66	10/1993 → 03/1997		2,0	12	063521250350	**MSN2111**
1.9 TDI	1Z, AHU	66	02/1996 → 05/1997		2,0	12	063521250420	**MSN2112**
1.9 TDI	AFN	81	03/1996 → 03/1997	AUTO	2,0	12	063521250350	**MSN2111**
1.9 TDI	AFN	81	03/1996 → 03/1997	MAN	2,0	12	063521250420	**MSN2112**
2.0	2E, ADY, AGG	85	07/1995 → 10/1996		1,1	12	063521210280	**MSN2099**
2.0	2E, ADY, AGG	85	07/1995 → 03/1997		1,1	12	063521210280	**MSN2099**
2.0	AEP	79	03/1995 → 08/1996		1,1	12	063521210280	**MSN2099**
2.0 16V	ABF	110	01/1994 → 03/1997		1,1	12	063521210280	**MSN2099**
2.8 VR6	AAA	128	06/1991 → 03/1997		2,0	12	063521250350	**MSN2111**

		kW			kW	V	LONG	SHORT
VW								
PASSAT Variant (3B5)								
1.6	ADP, AHL, ANA, ARM	74	06/1997 → 05/1998		1,1	12	063521070680	**MSN2070**
1.6	ADP, AHL, ANA, ARM	74	06/1998 → 11/2000		1,1	12	063521070730	**MSN2071**
1.8	ADR, APT, ARG	92	06/1997 → 05/1998		1,1	12	063521070680	**MSN2070**
1.8	ADR, APT, ARG	92	06/1998 → 11/2000		1,1	12	063521070730	**MSN2071**
1.8	AFY	85	06/1997 → 05/1998		1,1	12	063521070680	**MSN2070**
1.8	AFY	85	06/1998 → 11/2000		1,1	12	063521070730	**MSN2071**
1.8 Syncro/4motion	ADR, APT, ARG	92	08/1997 → 05/1998		1,1	12	063521070680	**MSN2070**
1.8 Syncro/4motion	ADR, APT, ARG	92	06/1998 → 11/2000		1,1	12	063521070730	**MSN2071**
1.8 T	AEB, ANB, APU	110	06/1997 → 05/1998		1,1	12	063521070680	**MSN2070**
1.8 T	AEB, ANB, APU	110	06/1998 → 11/2000		1,1	12	063521070730	**MSN2071**
1.9 TDI	AFN, AVG	81	06/1997 → 08/1999		1,7	12	063521101060	**MSN2028**
1.9 TDI	AFN, AVG	81	06/1997 → 11/2000		1,8	12	063521101380	**MSN2088**
1.9 TDI	AHH, AHU	66	06/1997 → 11/2000		1,7	12	063521101060	**MSN2028**
1.9 TDI	AHH, AHU	66	10/1998 → 11/2000		1,8	12	063521101380	**MSN2088**
1.9 TDI	AJM, ATJ	85	03/1999 → 11/2000		1,7	12	063521101060	**MSN2028**
1.9 TDI	AJM, ATJ	85	08/1998 → 11/2000		1,8	12	063521101380	**MSN2088**
1.9 TDI	AJM, ATJ	85	03/1999 → 11/2000		1,8	12	063521240200	**MSN2108**
1.9 TDI	AVB	74	02/2000 → 11/2000		1,7	12	063521101060	**MSN2028**
1.9 TDI	AVB	74	02/2000 → 11/2000		1,8	12	063521101380	**MSN2088**
1.9 TDI 4motion	ATJ	85	08/1999 → 11/2000		1,7	12	063521101060	**MSN2028**
1.9 TDI 4motion	ATJ	85	01/2000 → 11/2000		1,8	12	063521101380	**MSN2088**
1.9 TDI Syncro/4motion	AFN, AVG	81	10/1998 → 08/2000		1,7	12	063521101060	**MSN2028**
1.9 TDI Syncro/4motion	AFN, AVG	81	06/1997 → 11/2000		1,8	12	063521101380	**MSN2088**
PASSAT Variant (3B6)								
1.6	ALZ	75	11/2000 → 10/2003		1,1	12	063521070730	**MSN2071**
1.6	ALZ	75	11/2003 → 05/2005		1,2	12	063521074270	**MSN2077**
1.8 T	AWM	125	05/2002 → 10/2003		1,1	12	063521070730	**MSN2071**
1.8 T	AWM	125	11/2003 → 05/2005		1,2	12	063521074270	**MSN2077**
1.8 T 20V	AWT	110	11/2000 → 10/2003		1,1	12	063521070730	**MSN2071**
1.8 T 20V	AWT	110	11/2003 → 05/2005		1,2	12	063521074270	**MSN2077**
1.9 TDI	AVB	74	11/2000 → 05/2005		1,7	12	063521101060	**MSN2028**
1.9 TDI	AVF, AWX	96	11/2000 → 05/2005		1,7	12	063521101060	**MSN2028**
1.9 TDI	AVF, AWX	96	11/2000 → 12/2003		1,8	12	063521240200	**MSN2108**
1.9 TDI 4motion	AVF	96	11/2000 → 05/2005		1,7	12	063521101060	**MSN2028**
1.9 TDI 4motion	AVF	96	11/2000 → 12/2003		1,8	12	063521240200	**MSN2108**
2.0	ALT	96	11/2001 → 10/2003		1,1	12	063521070730	**MSN2071**
2.0	ALT	96	11/2003 → 05/2005		1,2	12	063521074270	**MSN2077**
2.0	AZM	85	11/2000 → 10/2003		1,1	12	063521070730	**MSN2071**
2.0	AZM	85	11/2003 → 05/2005		1,2	12	063521074270	**MSN2077**
2.0 4motion	AZM	85	11/2000 → 10/2003		1,1	12	063521070730	**MSN2071**
2.0 4motion	AZM	85	11/2003 → 05/2005		1,2	12	063521074270	**MSN2077**
2.0 TDI	BGW, BHW	100	12/2003 → 05/2005		1,7	12	063521101060	**MSN2028**
2.0 TDI	BGW, BHW	100	12/2003 → 12/2003		1,8	12	063521240200	**MSN2108**

		kW			kW	V	LONG	SHORT
VW								
PASSAT Variant (3C5)								
1.4 TSI	CAXA	90	05/2007 →		1,1	12	063521214080	**MSN2102**
1.6	BSE, BSF	75	08/2005 → 11/2010		1,0	12	063521204100	**MSN2096**
1.6 FSI	BLF	85	08/2005 → 06/2008		1,0	12	063521204100	**MSN2096**
1.6 FSI	BLF	85	08/2005 → 06/2008		1,1	12	063521214020	**MSN2101**
1.8 TSI	BZB, CDAA	118	05/2007 →		1,1	12	063521214080	**MSN2102**
1.9 TDI	BKC, BLS, BXE	77	08/2005 → 11/2008		1,7	12	063521230120	**MSN2104**
2.0 FSI	AXX, BPY, BWA, CAWB, CBFA, CCTA,CCZA	147	08/2005 →		1,1	12	063521214020	**MSN2101**
2.0 FSI	BLR, BLY, BVY, BVZ	110	08/2005 →		1,1	12	063521214080	**MSN2102**
2.0 FSI	CCTB	125	05/2008 → 11/2010		1,1	12	063521214020	**MSN2101**
2.0 FSI 4motion	BLX, BLY, BVX	110	09/2005 → 11/2005	AUTO	1,1	12	063521214020	**MSN2101**
2.0 FSI 4motion	BLX, BLY, BVX	110	09/2005 → 11/2005	MAN	1,1	12	063521214080	**MSN2102**
2.0 TDI	BMA, CBAA	100	08/2005 →		1,7	12	063521230160	**MSN2106**
2.0 TDI	BMP	103	08/2005 →		1,7	12	063521230160	**MSN2106**
2.0 TDI	BMR, CBBB	125	08/2005 →		1,7	12	063521230160	**MSN2106**
2.0 TDi	BUZ	120	08/2005 →		1,7	12	063521230160	**MSN2106**
2.0 TDI	BVE	90	08/2005 →		1,7	12	063521230160	**MSN2106**
2.0 TDI	BWV	88	03/2006 → 05/2006		1,7	12	063521230140	**MSN2105**
2.0 TDI 16V	BKP, CBAB	103	08/2005 → 06/2008		1,7	12	063521230140	**MSN2105**
2.0 TDI 16V 4motion	BKP, CBAB	103	08/2005 → 06/2008		1,7	12	063521230140	**MSN2105**
2.0 TDI 4motion	BMP	103	08/2005 →		1,7	12	063521230160	**MSN2106**
3.2 FSI 4motion	AXZ	184	11/2005 →		1,7	12	063521230160	**MSN2106**
3.6 FSI	BLV	206	09/2005 → 11/2010		1,7	12	063521230140	**MSN2105**
3.6 FSI 4motion	BLV	206	09/2005 → 11/2010		1,7	12	063521230140	**MSN2105**
3.6 R36 4motion	BWS	220	04/2007 →		1,7	12	063521230160	**MSN2106**
POLO (6N1)								
1.7 SDI	AHG	42	04/1997 → 10/1999		1,8	12	063521240220	**MSN2109**
100 1.4 16V	AFH	74	04/1996 → 10/1999		1,1	12	063521071030	**MSN2073**
120 1.6 16V GTI	AJV	88	09/1998 → 10/1999		1,1	12	063521071030	**MSN2073**
50 1.0	AER, ALL	37	09/1996 → 10/1999		0,9	12	063521120440	**MSN2090**
60 1.4	AEX, AKV, APQ	44	05/1997 → 10/1999		0,9	12	063521120440	**MSN2090**
60 1.7 SDI	AKU	44	08/1997 → 10/1999		1,8	12	063521240220	**MSN2109**
64 1.9 D	AEF	47	10/1994 → 10/1999		1,8	12	063521240220	**MSN2109**
64 1.9 SDI	AGD	47	07/1996 → 10/1999		1,8	12	063521240220	**MSN2109**
75 1.6	AEA, AEE, AHS	55	10/1994 → 07/1995		1,1	12	063521071030	**MSN2073**
POLO (6N2)								
1.0	ALD, AUC	37	10/1999 → 09/2001		1,1	12	063521071030	**MSN2073**
1.0	ALD, AUC	37	10/1999 → 09/2001		0,9	12	063521120440	**MSN2090**
1.4 16V	AFK, AQQ, AUB	74	10/1999 → 09/2001		1,1	12	063521071030	**MSN2073**
1.4 16V	AHW, APE, AUA	55	10/1999 → 09/2001		1,1	12	063521071030	**MSN2073**
1.4 16V	AHW, APE, AUA	55	05/2000 → 12/2000		0,9	12	063521120440	**MSN2090**

		kW			kW	V	LONG	SHORT
VW								
POLO (6N2)								
1.4 TDI	AMF	55	10/1999 → 09/2001		2,0	12	063521250420	**MSN2112**
1.6 16V GTI	ARC, AVY	92	11/1999 → 09/2001		1,1	12	063521071030	**MSN2073**
1.7 SDI	AKU	44	10/1999 → 09/2001		1,8	12	063521240220	**MSN2109**
1.9 D	AEF	47	10/1999 → 09/2001		1,8	12	063521240220	**MSN2109**
1.9 SDI	AGD, ASX	47	10/1999 → 09/2001		1,8	12	063521240220	**MSN2109**
POLO (6R_)								
1.2	CGPA	51	06/2009 →		1,0	12	063521204060	**MSN2094**
1.2	CGPB	44	06/2009 →		1,0	12	063521204060	**MSN2094**
1.2 TSI	CBZB	77	11/2009 →		1,0	12	063521204060	**MSN2094**
1.4	CGGB	63	06/2009 →		1,0	12	063521204060	**MSN2094**
1.6 BiFuel	CNKA	60	01/2011 →		1,0	12	063521204060	**MSN2094**
POLO (9N_)								
1.2	AWY, BMD	40	05/2004 → 05/2005		0,9	12	063521204000	**MSN2093**
1.2	AWY, BMD	40	04/2005 → 05/2007		1,0	12	063521204060	**MSN2094**
1.2	AWY, BMD	40	01/2002 → 05/2004		1,1	12	063521210160	**MSN2097**
1.2	BBM	44	05/2007 → 12/2009		1,0	12	063521204060	**MSN2094**
1.2 12V	AZQ, BME	47	11/2001 → 05/2004		0,9	12	063521204000	**MSN2093**
1.2 12V	AZQ, BME	47	04/2005 → 07/2007		1,0	12	063521204060	**MSN2094**
1.2 12V	AZQ, BME	47	11/2001 → 05/2004		1,1	12	063521210160	**MSN2097**
1.2 12V	BZG	51	05/2007 → 12/2009		1,0	12	063521204060	**MSN2094**
1.4 16V	AUA, BBY, BKY	55	10/2001 → 05/2005		0,9	12	063521204000	**MSN2093**
1.4 16V	AUA, BBY, BKY	55	04/2005 → 07/2007		1,0	12	063521204060	**MSN2094**
1.4 16V	AUA, BBY, BKY	55	10/2001 → 05/2005		1,1	12	063521210160	**MSN2097**
1.4 16V	AUB, BBZ	74	10/2001 → 04/2005		0,9	12	063521204000	**MSN2093**
1.4 16V	AUB, BBZ	74	04/2005 → 05/2007		1,0	12	063521204060	**MSN2094**
1.4 16V	AUB, BBZ	74	10/2001 → 04/2005		1,1	12	063521210160	**MSN2097**
1.4 16V	BUD	59	05/2006 → 12/2009		1,0	12	063521204060	**MSN2094**
1.4 16V	BUD	59	05/2006 → 12/2009		1,1	12	063521214020	**MSN2101**
1.4 FSI	AXU	63	02/2002 → 05/2005		0,9	12	063521204000	**MSN2093**
1.4 FSI	AXU	63	04/2005 → 07/2006		1,0	12	063521204060	**MSN2094**
1.4 TDI	AMF, BAY	55	10/2001 → 05/2005		2,0	12	063521250420	**MSN2112**
1.4 TDI	BMS, BNV	59	04/2005 → 12/2009		1,7	12	063521230120	**MSN2104**
1.4 TDI	BNM, BWB	51	10/2005 → 12/2009		1,7	12	063521230120	**MSN2104**
1.4 TDI	BNM, BWB	51	04/2005 → 12/2009		1,7	12	063521230180	**MSN2107**
1.6 16V	BTS	77	05/2006 → 12/2009		1,0	12	063521204060	**MSN2094**
1.6 16V	BTS	77	05/2006 → 12/2009		1,1	12	063521214020	**MSN2101**
1.8 GTI	BJX	110	09/2005 →		1,1	12	063521214080	**MSN2102**
1.8 GTi Cup Edition	BBU	132	05/2006 →		1,1	12	063521214080	**MSN2102**
1.9 SDI	ASY	47	04/2005 → 12/2009		1,7	12	063521230180	**MSN2107**
1.9 TDI	ASZ, BLT	96	04/2005 → 12/2009		1,7	12	063521230140	**MSN2105**
1.9 TDI	ASZ, BLT	96	11/2003 → 05/2005		2,0	12	063521250480	**MSN2113**
1.9 TDI	ATD, AXR, BMT	74	04/2005 → 12/2009		1,7	12	063521230120	**MSN2104**
1.9 TDI	ATD, AXR, BMT	74	10/2001 → 05/2005		2,0	12	063521250420	**MSN2112**

		kW			kW	V	LONG	SHORT
VW								
POLO CLASSIC (6KV2)								
1.6		74	05/1996 → 08/1999		1,1	12	063521210280	**MSN2099**
100 1.6	AEH, AFT, AKL, APF, AUR	74	10/1999 → 09/2001		1,1	12	063521210280	**MSN2099**
110 1.9 TDI	AFN, ASV	81	08/1998 → 09/2001		2,0	12	063521250420	**MSN2112**
2.0	ADC	85	08/1999 → 09/2001		1,1	12	063521210280	**MSN2099**
54 1.4	ANX	40	01/1998 → 08/1999		1,1	12	063521071030	**MSN2073**
57 1.7 SDI	AKW	42	11/1997 → 08/1999		2,0	12	063521250350	**MSN2111**
60 1.4	AEX, AKK, AKV, ANW, APQ, AUD	44	05/1996 → 09/2001		1,1	12	063521071030	**MSN2073**
64 1,9 D	1Y	47	01/1996 → 04/1996		2,0	12	063521250350	**MSN2111**
64 1.9 SDI	AEY	47	12/1995 → 08/1999		2,0	12	063521250350	**MSN2111**
68 1.9 SDI	AGP, AQM	50	10/1999 → 09/2001		2,0	12	063521250350	**MSN2111**
75 1.4 16V	APE, AUA	55	10/1999 → 09/2001		1,1	12	063521071030	**MSN2073**
75 1.6	1F	55	11/1995 → 09/1997		1,1	12	063521210280	**MSN2099**
75 1.6	AEE, ALM	55	04/1997 → 09/2001		1,1	12	063521071030	**MSN2073**
90 1.8	ADD	66	03/1998 → 09/2001		1,1	12	063521210280	**MSN2099**
90 1.9 TDI	AGR, AHU, ALE, ALH	66	10/1999 → 09/2001		2,0	12	063521250420	**MSN2112**
POLO Furgonato (6NF)								
1.6	AEA	55	10/1994 → 07/1995		1,1	12	063521071030	**MSN2073**
1.7 SDI	AKU	44	08/1997 → 12/1999		1,8	12	063521240220	**MSN2109**
1.9 D	AEF	47	10/1994 → 12/1999		1,8	12	063521240220	**MSN2109**
1.9 SDI	AGD	47	07/1996 → 12/1999		1,8	12	063521240220	**MSN2109**
POLO Tre volumi								
1.0	AER	37	08/1996 → 12/1999		0,9	12	063521120440	**MSN2090**
1.4	BBY, BKY	55	07/2003 → 05/2007		0,9	12	063521204000	**MSN2093**
1.4	BBY, BKY	55	10/2003 → 05/2005		1,1	12	063521210160	**MSN2097**
1.4	BBZ	74	11/2003 → 05/2007		0,9	12	063521204000	**MSN2093**
1.4	BLM	63	12/2003 → 05/2005		1,1	12	063521210160	**MSN2097**
1.4 TDI	BAY	55	12/2004 → 05/2007		1,7	12	063521230120	**MSN2104**
1.4 TDI	BAY	55	07/2003 → 11/2004		2,0	12	063521250420	**MSN2112**
1.6	BAH	74	07/2003 → 05/2007		1,1	12	063521210160	**MSN2097**
1.9 TDi	ATD	74	07/2003 → 05/2007		1,7	12	063521230120	**MSN2104**
POLO Variant (6KV5)								
1.4	AEX, AKK, AKV, ANW, APQ, AUD	44	10/1999 → 09/2001		1,1	12	063521071030	**MSN2073**
1.4 16V	APE, AUA	55	10/1999 → 09/2001		1,1	12	063521071030	**MSN2073**
1.6	AEE, ALM	55	09/1997 → 09/2001		1,1	12	063521071030	**MSN2073**
1.6	AEH, AFT, AKL, APF, AUR	74	01/1998 → 09/2001		1,1	12	063521210280	**MSN2099**
1.7 SDI	AKW	42	11/1997 → 08/1999		2,0	12	063521250350	**MSN2111**
1.9 SDI	AEY	47	06/1997 → 08/1999		2,0	12	063521250350	**MSN2111**
1.9 SDI	AGP, AQM	50	10/1999 → 09/2001		2,0	12	063521250350	**MSN2111**
1.9 TDI	AFN, ASV	81	10/1999 → 09/2001		2,0	12	063521250420	**MSN2112**
1.9 TDI	AGR, AHU, ALE, ALH	66	10/1999 → 09/2001		2,0	12	063521250420	**MSN2112**

		kW			kW	V	LONG	SHORT
VW								
SCIROCCO (137)								
1.4 TSI	CAVD	118	09/2008 →		1,1	12	063521214080	**MSN2102**
2.0 R	CDLA	195	11/2009 →		1,1	12	063521214020	**MSN2101**
2.0 R	CDLA	195	11/2009 → 05/2010		1,0	12	063521214120	**MSN2103**
2.0 R	CDLC	188	11/2009 →		1,1	12	063521214020	**MSN2101**
2.0 R	CDLC	188	11/2009 → 05/2010		1,0	12	063521214120	**MSN2103**
2.0 TSI	CAWB	147	09/2008 → 11/2009		1,1	12	063521214020	**MSN2101**
2.0 TSI	CAWB	147	09/2008 → 11/2009		1,0	12	063521214120	**MSN2103**
2.0 TSI	CCZB	155	11/2009 →		1,1	12	063521214020	**MSN2101**
2.0 TSI	CCZB	155	11/2009 → 05/2010		1,0	12	063521214120	**MSN2103**
SHARAN (7M8, 7M9, 7M6)								
1.8 T 20V	AJH, AWC	110	11/1997 → 02/2000	MAN	1,1	12	063521210260	**MSN2098**
1.8 T 20V	AJH, AWC	110	11/1997 → 02/2000	AUTO	1,1	12	063521210280	**MSN2099**
1.9 TDI	1Z, AHU, ANU	66	10/1995 → 02/2000		2,0	12	063521250420	**MSN2112**
1.9 TDI	1Z, AHU, ANU	66	03/1999 → 03/2010		2,0	12	063521250480	**MSN2113**
1.9 TDI	AFN, AVG	81	09/1996 → 02/2000	AUTO	2,0	12	063521250350	**MSN2111**
1.9 TDI	AFN, AVG	81	09/1996 → 02/2000	MAN	2,0	12	063521250420	**MSN2112**
1.9 TDI	ASZ	96	11/2002 → 11/2008		2,0	12	063521250480	**MSN2113**
1.9 TDI	AUY, BVK	85	05/2000 → 11/2008		2,0	12	063521250480	**MSN2113**
1.9 TDI	BTB	110	06/2005 → 06/2006		2,0	12	063521250480	**MSN2113**
1.9 TDI 4motion	AUY, BVK	85	05/2000 → 03/2010		2,0	12	063521250480	**MSN2113**
2.0	ADY, ATM	85	04/1999 → 02/2000		1,1	12	063521210260	**MSN2098**
2.0	ADY, ATM	85	01/1998 → 11/2008		1,1	12	063521210280	**MSN2099**
2.0 LPG	ATM	85	04/2006 → 03/2010		1,1	12	063521210280	**MSN2099**
2.0 TDI	BRT	103	11/2005 → 03/2010		2,0	12	063521250480	**MSN2113**
2.0 TDI	BVH	100	11/2005 → 03/2010		2,0	12	063521250480	**MSN2113**
2.8 V6 24V	AYL	150	05/2000 → 03/2010		2,0	12	063521250480	**MSN2113**
2.8 V6 24V 4motion	AYL	150	05/2000 → 03/2010		2,0	12	063521250480	**MSN2113**
2.8 VR6	AAA, AMY	128	09/1995 → 02/2000		2,0	12	063521250350	**MSN2111**
2.8 VR6 Syncro	AAA, AMY	128	11/1996 → 02/2000		2,0	12	063521250350	**MSN2111**
TIGUAN (5N_)								
1.4 TSI	BWK, CAVA	110	05/2008 →		1,1	12	063521214020	**MSN2101**
1.4 TSI 4motion	BWK, CAVA	110	11/2007 → 11/2008		1,1	12	063521214020	**MSN2101**
2.0 TFSI 4motion	CAWA, CCZC	125	03/2008 →		1,1	12	063521214020	**MSN2101**
2.0 TFSI 4motion	CAWB, CCTA, CCZA	147	11/2007 →		1,1	12	063521214020	**MSN2101**
TOURAN (1T1, 1T2, 1T3)								
1.2 TSI	CBZB	77	05/2010 →		1,0	12	063521204100	**MSN2096**
1.4 FSI	BLG, CAVB	125	11/2006 → 11/2008		1,0	12	063521214120	**MSN2103**
1.4 TSI	BMY, CAVC	103	11/2006 → 11/2008		1,1	12	063521214080	**MSN2102**
1.4 TSI	BMY, CAVC	103	11/2006 → 12/2008		1,0	12	063521214120	**MSN2103**

		kW		i	kW	V	LONG	SHORT
VW								
TOURAN (1T1, 1T2, 1T3)								
1.6	BGU, BSE, BSF	75	06/2005 → 05/2010		1,0	12	063521204100	**MSN2096**
1.6	BGU, BSE, BSF	75	07/2003 → 05/2005		1,1	12	063521214020	**MSN2101**
1.6 FSI	BAG, BLF, BLP	85	02/2003 → 01/2007		1,0	12	063521204100	**MSN2096**
1.6 FSI	BAG, BLF, BLP	85	02/2003 → 01/2007		1,1	12	063521214020	**MSN2101**
1.9 TDI	AVQ	74	02/2003 → 05/2004		1,7	12	063521230120	**MSN2104**
1.9 TDI	BKC, BLS, BXE	77	08/2003 → 05/2010	MAN	1,7	12	063521230120	**MSN2104**
1.9 TDI	BKC, BLS, BXE	77	08/2003 → 05/2010	AUTO	1,7	12	063521230160	**MSN2106**
1.9 TDI	BRU, BXF, BXJ	66	06/2005 → 05/2010		1,7	12	063521230120	**MSN2104**
2.0 EcoFuel	BSX	80	02/2006 → 05/2009		1,0	12	063521204100	**MSN2096**
2.0 FSI	AXW, BLR, BLX, BLY, BVY, BVZ	110	02/2005 → 11/2005		1,1	12	063521214020	**MSN2101**
2.0 FSI	AXW, BLR, BLX, BLY, BVY, BVZ	110	10/2003 → 11/2005		1,1	12	063521214080	**MSN2102**
2.0 TDI	AZV	100	02/2003 → 05/2010		1,7	12	063521230140	**MSN2105**
2.0 TDI	BMM	103	11/2006 → 11/2006		1,7	12	063521230140	**MSN2105**
2.0 TDI	BMM	103	11/2006 → 05/2010		1,7	12	063521230160	**MSN2106**
2.0 TDI	BMN, CFJA	125	11/2006 → 11/2006		1,7	12	063521230140	**MSN2105**
2.0 TDI	BMN, CFJA	125	11/2006 →		1,7	12	063521230160	**MSN2106**
2.0 TDI 16V	BKD, CFHC	103	08/2003 →		1,7	12	063521230160	**MSN2106**
TRANSPORTER IV Autobus (70XB, 70XC, 7DB, 7DW)								
2.5 TDI	ACV, AUF, AXL, AYC	75	09/1995 → 04/2003		2,0	12	063521250350	**MSN2111**
2.5 TDI	AJT, AYY	65	05/1998 → 04/2003		2,0	12	063521250350	**MSN2111**
2.5 TDI Syncro	ACV, AXL	75	03/1998 → 04/2003		2,0	12	063521250350	**MSN2111**
TRANSPORTER IV Furgonato (70XA)								
2.5 TDI	ACV, AUF, AYC	75	09/1995 → 04/2003		2,0	12	063521250350	**MSN2111**
2.5 TDI	AJT, AYY	65	12/1998 → 04/2003		2,0	12	063521250350	**MSN2111**
2.5 TDI Syncro	ACV, AXL	75	03/1998 → 04/2003		2,0	12	063521250350	**MSN2111**
TRANSPORTER IV Pianale piatto/Telaio (70XD)								
2.5 TDI	ACV, AUF, AYC	75	09/1995 → 04/2003		2,0	12	063521250350	**MSN2111**
2.5 TDI	AJT, AYY	65	05/1998 → 04/2003		2,0	12	063521250350	**MSN2111**
2.5 TDI Syncro	ACV, AXL	75	05/1998 → 04/2003		2,0	12	063521250350	**MSN2111**
TRANSPORTER V Autobus (7HB, 7HJ, 7EB, 7EJ)								
1.9 TDI	AXB	77	04/2003 → 11/2009		1,7	12	063521230120	**MSN2104**
1.9 TDI	AXC	63	04/2003 → 11/2009		1,7	12	063521230120	**MSN2104**
1.9 TDI	BRR	62	01/2006 → 11/2009		1,7	12	063521230120	**MSN2104**
1.9 TDI	BRS	75	06/2006 → 11/2009		1,7	12	063521230120	**MSN2104**
2.0	AXA	85	09/2009 →		1,1	12	063521214080	**MSN2102**
3.2 V6	BDL	170	02/2004 → 06/2004		1,7	12	063521230140	**MSN2105**
3.2 V6	BKK, CFLA	173	02/2004 → 11/2009		1,7	12	063521230140	**MSN2105**
TRANSPORTER V Furgonato (7HA, 7HH, 7EA, 7EH)								
1.9 TDI	AXB	77	04/2003 → 11/2009		1,7	12	063521230120	**MSN2104**
1.9 TDI	AXC	63	04/2003 → 11/2009		1,7	12	063521230120	**MSN2104**

		kW			kW	V	LONG	SHORT
VW								
TRANSPORTER V Pianale piatto/Telaio (7JD, 7JE, 7JL, 7JY, 7JZ)								
1.9 TDI	BRR	62	01/2006 → 11/2009		1,7	12	063521230120	**MSN2104**
1.9 TDI	BRS	75	06/2006 → 11/2009		1,7	12	063521230120	**MSN2104**
2.0	AXA	85	09/2009 →		1,1	12	063521214080	**MSN2102**
3.2 V6	BDL	170	04/2003 → 06/2004		1,7	12	063521230140	**MSN2105**
3.2 V6	BKK, CFLA	173	02/2004 → 11/2009		1,7	12	063521230140	**MSN2105**
1.9 TDI	AXB	77	04/2003 → 11/2009		1,7	12	063521230120	**MSN2104**
1.9 TDI	AXC	63	04/2003 → 11/2009		1,7	12	063521230120	**MSN2104**
1.9 TDI	BRR	62	06/2006 → 11/2009		1,7	12	063521230120	**MSN2104**
1.9 TDI	BRS	75	06/2006 → 11/2009		1,7	12	063521230120	**MSN2104**
2.0	AXA	85	09/2009 →		1,1	12	063521214080	**MSN2102**
3.2 V6	BDL	170	02/2004 → 11/2009		1,7	12	063521230140	**MSN2105**
3.2 V6	BKK	173	08/2003 → 05/2006		1,7	12	063521230140	**MSN2105**
VENTO (1H2)								
1.4	ABD, AEX	44	10/1992 → 07/1995		1,1	12	063521071030	**MSN2073**
1.4	ABD, AEX	40	10/1992 → 07/1995		1,1	12	063521071030	**MSN2073**
1.4	ABD, AEX	44	11/1991 → 09/1992		0,8	12	063521130070	**MSN2092**
1.4	ABD, AEX	40	11/1991 → 09/1992		0,8	12	063521130070	**MSN2092**
1.6	ABU, AEA, AEE	55	09/1992 → 09/1994		1,1	12	063521071030	**MSN2073**
1.6	AEK, AFT	74	08/1995 → 12/1997		1,1	12	063521210280	**MSN2099**
1.8	AAM	55	08/1995 → 12/1997		1,1	12	063521210280	**MSN2099**
1.8	ABS, ADZ	66	08/1995 → 12/1997		1,1	12	063521210280	**MSN2099**
1.9 D	1Y	48	11/1991 → 12/1997		2,0	12	063521250350	**MSN2111**
1.9 SDI	AEY	47	04/1997 → 12/1997		2,0	12	063521250350	**MSN2111**
1.9 TD	AAZ	55	11/1991 → 12/1997		2,0	12	063521250350	**MSN2111**
1.9 TDI	1Z, AHU, ALE	66	09/1993 → 12/1997		2,0	12	063521250350	**MSN2111**
1.9 TDI	1Z, AHU, ALE	66	09/1993 → 09/1998		2,0	12	063521250420	**MSN2112**
1.9 TDI	AFN	81	04/1996 → 12/1997	AUTO	2,0	12	063521250350	**MSN2111**
1.9 TDI	AFN	81	04/1996 → 12/1997	MAN	2,0	12	063521250420	**MSN2112**
2.0	2E, ADY, AGG, AKR	85	07/1995 → 12/1997		1,1	12	063521210280	**MSN2099**
2.8 VR6	AAA	128	01/1992 → 12/1997		2,0	12	063521250350	**MSN2111**

Applicazione per marca e veicolo
Vehicle application guide
Zuordnung nach Marke und Fahrzeug
Affectations par marques et véhicules
Aplicación por marca y vehículo
Aplicação por marca e veículo
ρμογή ανά μο
Zastosowanie dla marki i pojazdu
Marka ve araca göre uygulama

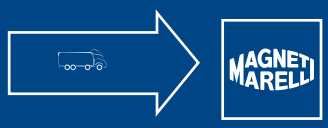

		kW ÷ kW		i	kW	V	LONG	SHORT
AVELING BARFORD								
DC								
Tutte			01/1980 →		2,8	12	063227569010	**MSN202**
TD								
Tutte			01/1980 →		2,8	12	063227569010	**MSN202**
BEDFORD								
SB-SP - Coach (300)								
Tutte			01/1975 → 01/1984		2,2	12	063227486010	**MSN180**
Tutte			01/1975 → 01/1984		2,8	12	063227592010	**MSN203**
TL 1000 330								
Tutte			01/1980 → 01/1982		2,2	12	063227486010	**MSN180**
Tutte			01/1980 → 01/1982		2,8	12	063227592010	**MSN203**
TL 1260 330								
Tutte			01/1980 → 01/1982		2,2	12	063227486010	**MSN180**
Tutte			01/1980 → 01/1982		2,8	12	063227592010	**MSN203**
TL 1630 330 - Turbo (107 bhp)								
Tutte			01/1982 → 01/1986		2,2	12	063227486010	**MSN180**
Tutte			01/1982 → 01/1986		2,8	12	063227592010	**MSN203**
TL 860 330								
Tutte			01/1980 → 01/1982		2,2	12	063227486010	**MSN180**
Tutte			01/1980 → 01/1982		2,8	12	063227592010	**MSN203**
BUSSING								
Medium Truck								
OM - 20			09/1968 → 12/1972		4,0	24	063216733010	**MSN214**
OM - 27			09/1968 → 12/1972		4,0	24	063216733010	**MSN214**
OM - 35			09/1968 → 12/1972		4,0	24	063216733010	**MSN214**
OM - 40			09/1968 → 12/1972		4,0	24	063216733010	**MSN214**
OM - 45			09/1968 → 12/1972		4,0	24	063216733010	**MSN214**
PRAFEKT - C DAL			→		4,0	24	063216733010	**MSN214**
IVECO								
160 A 13 FL								
Tutte			01/1983 → 11/1984		3,0	12	063522300090	**MSN2040**
25 - H2/H4								
Tutte	8035.05.377		11/1985 → 04/1989		2,5	12	063217126010	**MSN227**
Tutte	8035.05.377		11/1985 → 04/1989		2,6	12	063522235040	**MSN2036**
Tutte	8035.05.377		11/1985 → 04/1989		3,0	12	063523620390	**MSN2050**
25 - M2/M4								
Tutte	8035.05.377		11/1985 → 04/1989		2,5	12	063217126010	**MSN227**
Tutte	8035.05.377		11/1985 → 04/1989		2,6	12	063522235040	**MSN2036**
Tutte	8035.05.377		11/1985 → 04/1989		3,0	12	063523620390	**MSN2050**
30 - H2/H4								
Tutte	8035.05.377		11/1985 → 04/1989		2,5	12	063217126010	**MSN227**
Tutte	8035.05.377		11/1985 → 04/1989		2,6	12	063522235040	**MSN2036**
Tutte	8035.05.377		11/1985 → 04/1989		3,0	12	063523620390	**MSN2050**

		kW ÷ kW		i	kW	V	LONG	SHORT
IVECO								
30 - M2/M4								
Tutte	8035.05.377		11/1985 → 04/1989		2,5	12	063217126010	**MSN227**
Tutte	8035.05.377		11/1985 → 04/1989		2,6	12	063522235040	**MSN2036**
Tutte	8035.05.377		11/1985 → 04/1989		3,0	12	063523620390	**MSN2050**
621D - 6TAA-6802								
Tutte	NEF, 6-cyl; Tier III		→		4,0	24	063522630200	**MSN2118**
DI - 20C/25C/30C								
Tutte	8035.05.359		02/1986 → 12/1990		3,5	12	063216831010	**MSN219**
EURO 110								
Tutte			01/1987 → 08/1988		3,0	12	063522300090	**MSN2040**
EURO 120 TA								
Tutte			01/1987 → 08/1988		3,0	12	063522300090	**MSN2040**
EURO 220								
Tutte			01/1987 → 08/1988		3,0	12	063522300090	**MSN2040**
EURO 220 T								
Tutte			01/1987 → 09/1988		3,0	12	063522300090	**MSN2040**
EURO 230 T								
Tutte			01/1987 → 09/1988		3,0	12	063522300090	**MSN2040**
EURO 335 T								
Tutte			01/1987 → 09/1988		3,0	12	063522300090	**MSN2040**
EURO 340 T								
Tutte			01/1987 → 08/1988		3,0	12	063522300090	**MSN2040**
EURO 435 T								
Tutte			01/1987 → 08/1988		3,0	12	063522300090	**MSN2040**
EURO 450 T								
Tutte			01/1987 → 09/1988		3,0	12	063522300090	**MSN2040**
EURO TURBO								
10-14			10/1988 → 09/1990		3,0	12	063522300090	**MSN2040**
12-14, AS			10/1988 → 09/1990		3,0	12	063522300090	**MSN2040**
13-14, AS			01/1990 → 12/1990		3,0	12	063522300090	**MSN2040**
15-14, AS			10/1988 → 12/1990		3,0	12	063522300090	**MSN2040**
18-14			10/1988 → 09/1990		3,0	12	063522300090	**MSN2040**
18-16			02/1990 → 12/1990		3,0	12	063522300090	**MSN2040**
23-16 T			10/1988 → 12/1990		3,0	12	063522300090	**MSN2040**
EuroCargo								
100 E 15	8060.25R.4200 LTC, 8060.45R.5000, 8060.45R.5001, 8060.45R.5003, 8060.45R.5005	105	01/1991 → 08/2000		4,0	24	063216741010	**MSN521**
100 E 15 K	8060.25R.4200 LTC	105	01/1991 → 08/2000	→ 296081	4,0	24	063216741010	**MSN521**
100 E 15 K	8060.25R.4200 LTC	105	01/1991 → 08/2000	296082 →	4,0	24	063522310110	**MSN2045**
100 E 17 K tector, 100 E 17 DK tector	F4AE0481A	125	09/2000 → 08/2003		4,0	24	063522310160	**MSN2008**
100 E 17, 100 E 17 DP tector, 100 E 18 tector	F4AE0481A, F4AE3481B	125 130	09/2000 → 08/2003		4,0	24	063522310160	**MSN2008**

		kW ÷ kW		i	kW	V	LONG	SHORT
IVECO								
EuroCargo								
100 E 18	8060.25V.4000	130	01/1991 → 11/2000	→296081	4,0	24	063216741010	**MSN521**
100 E 18	8060.25V.4000	130	01/1991 → 11/2000	296082 →	4,0	24	063522310110	**MSN2045**
100 E 18 K	8060.25V.4000	130	01/1991 → 11/2000	→296081	4,0	24	063216741010	**MSN521**
100 E 18 K	8060.25V.4000	130	01/1991 → 11/2000	296082 →	4,0	24	063522310110	**MSN2045**
100 E 18 K tector, 100 E 18 DK tector	F4AE0681E	134	09/2000 → 08/2003		4,0	24	063522310160	**MSN2008**
100 E 18 tector	F4AE0681D, F4AE0681E	134	09/2000 → 08/2003		4,0	24	063522310160	**MSN2008**
100 E 18 W tector, 100 E 18 WS tector	F4AE0681E, F4AE3681C	134 135	09/2000 → 08/2003		4,0	24	063522310160	**MSN2008**
100 E 21	8060.45.4100 TCA, 8060.45.4180	152	01/1991 → 11/2000		4,0	24	063216741010	**MSN521**
100 E 21 K tector, 100 E 21 DK tector	F4AE0681D	154	09/2000 → 08/2003		4,0	24	063522310160	**MSN2008**
100 E 21 W tector, 100 E 21 WS tector	F4AE0681D	154	09/2000 → 08/2003		4,0	24	063522310160	**MSN2008**
100 E 21, 100 E 21 DP tector, 100 E 22 tector	F4AE0681D, F4AE3681B	154 160	09/2000 → 08/2003		4,0	24	063522310160	**MSN2008**
120 E 15	8060.25R 4200, 8060.25R.4280	105	01/1991 → 07/2000		4,0	24	063216741010	**MSN521**
120 E 15	8060.25R 4200, 8060.25R.4280	105	12/1991 → 07/2000		4,0	24	063522310110	**MSN2045**
120 E 15 K	8060.25R.4280	105	01/1992 → 07/2000	→296081	4,0	24	063216741010	**MSN521**
120 E 15 K	8060.25R.4280	105	01/1992 → 07/2000	296082 →	4,0	24	063522310110	**MSN2045**
120 E 18	8060.25V.4080	130	01/1992 → 07/2000	→296081	4,0	24	063216741010	**MSN521**
120 E 18	8060.25V.4080	130	01/1992 → 07/2000	296082 →	4,0	24	063522310110	**MSN2045**
120 E 18 K	8060.25V.4080	130	01/1992 → 07/2000	→296081	4,0	24	063216741010	**MSN521**
120 E 18 K	8060.25V.4080	130	01/1992 → 07/2000	296082 →	4,0	24	063522310110	**MSN2045**
120 E 18 K tector, 120 E 18 DK tector	F4AE0681E	134	09/2000 → 08/2005		4,0	24	063522310160	**MSN2008**
120 E 18 tector, 120 E 18 D tector, 120 E 18 DP tector	F4AE0681D, F4AE0681E	134	09/2000 → 08/2005		4,0	24	063522310160	**MSN2008**
120 E 21 K tector	F4AE0681D	154	09/2003 → 08/2005		4,0	24	063522310160	**MSN2008**

		kW ÷ kW		i	kW	V	LONG	SHORT
IVECO								
EuroCargo								
120 E 21 tector, 120 E 21 P tector, 120 E 21 FP tector	F4AE0681C, F4AE0681D, F4AE3681B	154 160	09/2003 → 08/2005		4,0	24	063522310160	**MSN2008**
120 E 23	8060.45.6090, 8060.45S.6800	167	01/1992 → 08/2000		4,0	24	063216741010	**MSN521**
120 E 24 K tector, 120 E 24 DK tector	F4AE0681B	176	09/2000 → 08/2005		4,0	24	063522310160	**MSN2008**
120 E 24, 120 E 24 DP tector, 120 E 25 tector	F4AE0681B, F4AE3681D	176 185	09/2000 → 08/2005		4,0	24	063522310160	**MSN2008**
120 E 28 tector	F4AE0681A, F4AE3681E	202 205	09/2000 → 08/2005		4,0	24	063522310160	**MSN2008**
120 E28 K tector	F4AE0681A, F4AE3681E	202 205	09/2000 → 08/2005		4,0	24	063522310160	**MSN2008**
120 EL 17, 120 EL 17 P tector, 120 E 18, 120 EL 18 tector	F4AE0481A, F4AE3481A	125 134	08/2005 →		4,0	24	063522310160	**MSN2008**
120 EL 21, 120 EL 21 P tector, 120 E 22, 120 EL 22 tector	F4AE0681C, F4AE0681D, F4AE3681B	154 160	09/2000 → 08/2003		4,0	24	063522310160	**MSN2008**
130 E 15	8060.25R.4280	105	01/1994 → 07/2000	→296081	4,0	24	063216741010	**MSN521**
130 E 15	8060.25R.4280	105	01/1994 → 07/2000	296082 →	4,0	24	063522310110	**MSN2045**
130 E 15 K	8060.25R.4280	105	01/1994 → 07/2000	→296081	4,0	24	063216741010	**MSN521**
130 E 15 K	8060.25R.4280	105	01/1994 → 07/2000	296082 →	4,0	24	063522310110	**MSN2045**
130 E 18	8060.25V.4080	130	01/1992 → 07/2000	→296081	4,0	24	063216741010	**MSN521**
130 E 18	8060.25V.4080	130	01/1992 → 07/2000	296082 →	4,0	24	063522310110	**MSN2045**
130 E 18 K	8060.25V.4080	130	01/1992 → 07/2000	→296081	4,0	24	063216741010	**MSN521**
130 E 18 K	8060.25V.4080	130	01/1992 → 07/2000	296082 →	4,0	24	063522310110	**MSN2045**
130 E 18 K tector, 130 E 18 DK tector	F4AE0681E	134	09/2000 → 08/2005		4,0	24	063522310160	**MSN2008**
130 E 18 tector, 130 E 18 D tector, 130 E 18 DP tector	F4AE0681D, F4AE0681E	134	09/2000 → 08/2005		4,0	24	063522310160	**MSN2008**
130 E 21 K tector	F4AE0681D	154	09/2003 → 08/2005		4,0	24	063522310160	**MSN2008**
130 E 21 tector, 130 E21 P tector, 130 E 21 FP tector	F4AE0681C, F4AE0681D	154	09/2003 → 08/2005		4,0	24	063522310160	**MSN2008**

		kW ÷ kW		i	kW	V	LONG	SHORT
IVECO								
EuroCargo								
130 E 23	8060.45.6090, 8060.45S.6000	167	01/1992 → 07/2000		4,0	24	063216741010	**MSN521**
130 E 24 K tector, 130 E 24 DK tector	F4AE0681B	176	09/2000 → 08/2005		4,0	24	063522310160	**MSN2008**
130 E 24 tector, 130 E 24 D tector, 130 E 24 DP tector	F4AE0681B	176	09/2000 → 08/2005		4,0	24	063522310160	**MSN2008**
130 E 28 K tector	F4AE0681A	202	09/2000 → 08/2005		4,0	24	063522310160	**MSN2008**
130 E 28 tector	F4AE0681A	202	09/2000 → 08/2005		4,0	24	063522310160	**MSN2008**
135 E 18 W	8060.25V.4800	130	01/1997 → 07/2000	→296081	4,0	24	063216741010	**MSN521**
135 E 18 W	8060.25V.4800	130	01/1997 → 07/2000	296082 →	4,0	24	063522310110	**MSN2045**
135 E 18 WR	8060.25V.4800	130	01/1994 → 12/1996	→296081	4,0	24	063216741010	**MSN521**
135 E 18 WR	8060.25V.4800	130	01/1994 → 12/1996	296082 →	4,0	24	063522310110	**MSN2045**
135 E 23 W	8060.45S TCA	167	01/1997 → 07/2000		4,0	24	063216741010	**MSN521**
135 E 23 WR	8060.45S TCA	167	01/1994 → 12/1996		4,0	24	063216741010	**MSN521**
140 E 18 K	F4AE0681E	134	05/2005 → 08/2005		4,0	24	063522310160	**MSN2008**
140 E 18 W tector	F4AE0681E	134	09/2000 → 09/2005		4,0	24	063522310160	**MSN2008**
140 E 18, 140 E 18 P, 140 E 18 FP	F4AE0681E	134	05/2005 → 08/2005		4,0	24	063522310160	**MSN2008**
140 E 21 K	F4AE0681D	154	05/2005 → 08/2005		4,0	24	063522310160	**MSN2008**
140 E 21 tector, 140 E 21 P, 140 E 21 FP	F4AE0681C, F4AE0681D	154	03/2005 → 08/2005		4,0	24	063522310160	**MSN2008**
140 E 24 K tector	F4AE0681B	176	09/2003 → 08/2005		4,0	24	063522310160	**MSN2008**
140 E 24 tector, 14 E 24 P tector, 140 E 24 FP tector	F4AE0681B	176	09/2003 → 08/2005		4,0	24	063522310160	**MSN2008**
140 E 24 W tector, 140 E 24 WS tector	F4AE0681B	176	09/2000 → 08/2005		4,0	24	063522310160	**MSN2008**
150 E 15	8060.25R.4280	105	01/1992 → 12/1996	→296081	4,0	24	063216741010	**MSN521**
150 E 15	8060.25R.4280	105	01/1992 → 12/1996	296082 →	4,0	24	063522310110	**MSN2045**
150 E 15 K	8060.25R.4280	105	01/1992 → 12/1996	→296081	4,0	24	063216741010	**MSN521**
150 E 15 K	8060.25R.4280	105	01/1992 → 12/1996	296082 →	4,0	24	063522310110	**MSN2045**
150 E 18	8060.25V.4000, 8060.25V.4080	130	01/1992 → 07/2000	→296081	4,0	24	063216741010	**MSN521**
150 E 18	8060.25V.4000, 8060.25V.4080	130	01/1992 → 07/2000	296082 →	4,0	24	063522310110	**MSN2045**

		kW ÷ kW		i	kW	V	LONG	SHORT
IVECO								
EuroCargo								
150 E 18 K	8060.25V.4000, 8060.25V.4080	130	01/1992 → 07/2000	→296081	4,0	24	063216741010	**MSN521**
150 E 18 K	8060.25V.4000, 8060.25V.4080	130	01/1992 → 07/2000	296082 →	4,0	24	063522310110	**MSN2045**
150 E 18 K tector	F4AE0681E	134	09/2000 → 08/2005		4,0	24	063522310160	**MSN2008**
150 E 18 tector	F4AE0681E	134	09/2000 → 08/2005		4,0	24	063522310160	**MSN2008**
150 E 21 K tector	F4AE0681D	154	09/2003 → 08/2005		4,0	24	063522310160	**MSN2008**
150 E 21 tector, 150 E 21 P tector, 150 E 21 FP tector	F4AE0681C, F4AE0681D	154	09/2003 → 08/2005		4,0	24	063522310160	**MSN2008**
150 E 23	8060.45.6090, 8060.45S.6800	167	01/1992 → 07/2000		4,0	24	063216741010	**MSN521**
150 E 24 K tector	F4AE0681B	176	08/2005 →		4,0	24	063522310160	**MSN2008**
150 E 24 tector, 150 E 25 tector	F4AE0681B, F4AE3681D	176 185	09/2000 → 08/2005		4,0	24	063522310160	**MSN2008**
150 E 27, 150 E 27 R	8360.46.417 TCA	196	01/1992 → 07/2000		4,0	24	063523680820	**MSN2057**
150 E 27, 150 E 27 R	8360.46.417 TCA	196	01/1992 → 07/2000		5,4	24	063524160460	**MSN2062**
150 E 28 K tector	F4AE0681A, F4AE3681E	202 205	08/2005 →		4,0	24	063522310160	**MSN2008**
150 E 28 tector	F4AE0681A, F4AE3681E	202 205	09/2000 → 08/2005		4,0	24	063522310160	**MSN2008**
160 E 21 tector, 160 E 21 P tector	F4AE0681C, F4AE0681D	154	09/2003 → 08/2005		4,0	24	063522310160	**MSN2008**
160 E 24 tector, 160 E 24 P tector	F4AE0681B	176 177	09/2003 → 08/2005		4,0	24	063522310160	**MSN2008**
160 E 28 tector, 160 E 28 P tector	F4AE0681A, F4AE3681E	202 205	09/2003 → 08/2005		4,0	24	063522310160	**MSN2008**
170 E 18 K, 180 E 18 K	8060.25V.4800	130	01/1994 → 07/2000	→296081	4,0	24	063216741010	**MSN521**
170 E 18 K, 180 E 18 K	8060.25V.4800	130	01/1994 → 07/2000	296082 →	4,0	24	063522310110	**MSN2045**
170 E 18, 180 E 18	8060.25V.4800	130	01/1994 → 07/2000	→296081	4,0	24	063216741010	**MSN521**
170 E 18, 180 E 18	8060.25V.4800	130	01/1994 → 07/2000	296082 →	4,0	24	063522310110	**MSN2045**
170 E 23 K,180 E 23 K	8060.45S TCA	167	01/1994 → 07/2000		4,0	24	063216741010	**MSN521**
170 E 23,180 E 23	8060.45S TCA	167	01/1994 → 07/2000		4,0	24	063216741010	**MSN521**
170 E 27,180 E 27	8360.46.417 TCA	196	01/1994 → 07/2000		4,0	24	063523680820	**MSN2057**
170 E 27,180 E 27	8360.46.417 TCA	196	01/1994 → 07/2000		5,4	24	063524160460	**MSN2062**
180 E 21 K tector	F4AE0681D	154	08/2005 →		4,0	24	063522310160	**MSN2008**
180 E 21 T	8060.45.4100 TCA	152	04/1992 → 07/2000		4,0	24	063216741010	**MSN521**
180 E 21 tector	F4AE0681C, F4AE0681D	154	08/2005 →		4,0	24	063522310160	**MSN2008**
180 E 24 K tector	F4AE0681B	176	08/2005 →		4,0	24	063522310160	**MSN2008**

		kW ÷ kW		i	kW	V	LONG	SHORT
IVECO								
EuroCargo								
180 E 24, 180 E 25 tector	F4AE0681B, F4AE3681D	176 185	08/2005 →		4,0	24	063522310160	**MSN2008**
180 E 28 K tector	F4AE0681A, F4AE3681E	202 205	08/2005 →		4,0	24	063522310160	**MSN2008**
180 E 28 tector, 180 E 28 P tector	F4AE0681A, F4AE3681E	202 205	08/2005 →		4,0	24	063522310160	**MSN2008**
260 E 23	8060.45S TCA, 8060.45S.6000	167	12/1991 → 07/2000		4,0	24	063216741010	**MSN521**
260 E 23 KE		167	12/1991 → 07/2000		4,0	24	063216741010	**MSN521**
260 E 23 T	8060.45S TCA, 8060.45S.6000	167	01/1992 → 07/2000		4,0	24	063216741010	**MSN521**
260 E 27 KE	8360.46.417, 8360.46.417 TCA	196	09/1991 → 07/2000		4,0	24	063523680820	**MSN2057**
260 E 27 KE	8360.46.417, 8360.46.417 TCA	196	09/1991 → 07/2000		5,4	24	063524160460	**MSN2062**
280 E 23	8060.45S TCA, 8060.45S.6000	167	12/1991 → 11/2000		4,0	24	063216741010	**MSN521**
280 E 23 T	8060.45S.6000	167	01/1992 → 11/2000		4,0	24	063216741010	**MSN521**
320 E 27	8360.46.417, 8360.46.417 TCA	196	10/1991 → 08/2000		4,0	24	063523680820	**MSN2057**
320 E 27	8360.46.417, 8360.46.417 TCA	196	10/1991 → 08/2000		5,4	24	063524160460	**MSN2062**
320 E 27 T	8360.46.417	196	01/1992 → 08/2000		4,0	24	063523680820	**MSN2057**
320 E 27 T	8360.46.417	196	01/1992 → 08/2000		5,4	24	063524160460	**MSN2062**
320 E 28 T tector	F4AE0681A	202	09/2000 → 08/2003		4,0	24	063522310160	**MSN2008**
320 E 28 tector	F4AE0681A	202	09/2000 → 08/2003		4,0	24	063522310160	**MSN2008**
60 E 10	8040.25B.4200	75	01/1991 → 05/1996		3,0	24	063217226010	**MSN237**
60 E 12	8040.25X.4000	85	01/1991 → 12/1996		3,0	24	063217226010	**MSN237**
60 E 14	8040.45.4000	100	01/1991 → 12/1996		3,0	24	063217226010	**MSN237**
60 E 14 K	8040.45.4000	100	01/1991 → 12/1996		3,0	24	063217226010	**MSN237**
65 E 10	8040.25B.4200	75	01/1991 → 05/1996		3,0	24	063217226010	**MSN237**
65 E 10 K	8040.25B.4200	75	01/1991 → 05/1996		3,0	24	063217226010	**MSN237**
65 E 12	8040.25X.4000	85	01/1991 → 05/1996		3,0	24	063217226010	**MSN237**
65 E 12 K	8040.25X.4000	85	01/1991 → 05/1996		3,0	24	063217226010	**MSN237**
65 E 13 K tector	F4AE0481D	95	09/2000 → 08/2005		4,0	24	063522310160	**MSN2008**
65 E 14	8040.45.4000	100	01/1991 → 06/1996		3,0	24	063217226010	**MSN237**
65 E 14 K	8040.45.4000	100	01/1991 → 06/1996		3,0	24	063217226010	**MSN237**
65 E 15 tector, 65 E 15 P tector	F4AE0481C	110	09/2000 → 08/2003		4,0	24	063522310160	**MSN2008**
65 E15	F4AE0481C	110	09/2000 → 08/2003		4,0	24	063522310160	**MSN2008**
75 E 12	8040.25X.4000	85	01/1991 → 05/1996		3,0	24	063217226010	**MSN237**
75 E 13 K tector	F4AE0481D	95	09/2003 → 08/2005		4,0	24	063522310160	**MSN2008**
75 E 13 tector, 75 E 13 P tector	F4AE0481D	95	09/2000 → 08/2003		4,0	24	063522310160	**MSN2008**

		kW ÷ kW		i	kW	V	LONG	SHORT
IVECO								
EuroCargo								
75 E 14	8040.45.4000, 8040.45.4180	100	01/1991 →		4,0	24	063216741010	**MSN521**
75 E 14	8040.45.4000, 8040.45.4180	100	01/1991 → 12/1993		3,0	24	063217226010	**MSN237**
75 E 14 K	8040.45.4000, 8040.45.4180	100	01/1997 →		4,0	24	063216741010	**MSN521**
75 E 15 K	8060.25R.4200 LTC	105	01/1991 → 12/1992		4,0	24	063216741010	**MSN521**
75 E 15 K tector	F4AE0481C	110	09/2000 → 08/2003		4,0	24	063522310160	**MSN2008**
75 E 15 tector, 75 E 15 P tector	F4AE0481C	110	09/2000 → 08/2003		4,0	24	063522310160	**MSN2008**
75 E 15, 80 E 15	8060.25R.4200 LTC	105	01/1991 → 12/1992	→296081	4,0	24	063216741010	**MSN521**
75 E 15, 80 E 15	8060.25R.4200 LTC	105	01/1991 → 12/1992	296082 →	4,0	24	063522310110	**MSN2045**
75 E 17 K, 75 E 18 K tector	F4AE0481A, F4AE3481B	125 130	09/2000 → 08/2003		4,0	24	063522310160	**MSN2008**
75 E 17, 75 E 17 P, 75 E 18 tector	F4AE0481A, F4AE3481B	125 130	09/2000 → 08/2003		4,0	24	063522310160	**MSN2008**
75 E 18 K tector	F4AE0681E	134	09/2000 → 08/2005		4,0	24	063522310160	**MSN2008**
75 E 18 tector, 75 E 18 P tector	F4AE0681D, F4AE0681E	134	09/2000 → 08/2005		4,0	24	063522310160	**MSN2008**
80 E 15	8060.25R.4200 LTC	105	01/1991 → 08/2000	→296081	4,0	24	063216741010	**MSN521**
80 E 15	8060.25R.4200 LTC	105	01/1991 → 08/2000	296082 →	4,0	24	063522310110	**MSN2045**
80 E 15 K	8060.25R.4200 LTC	105	01/1991 → 08/2000	→296081	4,0	24	063216741010	**MSN521**
80 E 15 K	8060.25R.4200 LTC	105	01/1991 → 08/2000	296082 →	4,0	24	063522310110	**MSN2045**
80 E 17 K, 80 E 17 DK tector, 80 E 18 K tector	F4AE0481A, F4AE3481B	125 130	09/2000 → 08/2003		4,0	24	063522310160	**MSN2008**
80 E 17, 80 E 17 D tector, 80 E 17 DP tector, 80 E 18 tector	F4AE0481A, F4AE3481B	125 130	09/2000 → 08/2003		4,0	24	063522310160	**MSN2008**
80 E 18	8060.25V.4000	130	01/1991 → 08/2000	→296081	4,0	24	063216741010	**MSN521**
80 E 18	8060.25V.4000	130	01/1991 → 08/2000	296082 →	4,0	24	063522310110	**MSN2045**
80 E 18 K	8060.25V.4000	130	01/1991 → 08/2000	→296081	4,0	24	063216741010	**MSN521**
80 E 18 K	8060.25V.4000	130	01/1991 → 08/2000	296082 →	4,0	24	063522310110	**MSN2045**

		kW ÷ kW		i	kW	V	MAGNETI MARELLI LONG	MAGNETI MARELLI SHORT
IVECO								
EuroCargo								
80 E 18 K tector, 80 E 18 DK tector	F4AE0681E	134	09/2000 → 08/2003		4,0	24	063522310160	**MSN2008**
80 E 18 tector, 80 E 18 D tector, 80 E 18 DP tector	F4AE0681D, F4AE0681E	134	09/2000 → 08/2003		4,0	24	063522310160	**MSN2008**
80 E 21	8060.45.4100 TCA, 8060.45.4180	152	01/1991 → 08/2000		4,0	24	063216741010	**MSN521**
80 E 21 K, 80 E 21 DK tector, 80 E 22 K tector	F4AE0681D, F4AE3681B	154 160	09/2000 → 08/2005		4,0	24	063522310160	**MSN2008**
80 E 21, 80 E 21 D tector, 80 E 21 DP tector, 80 E 22 tector	F4AE0681D, F4AE3681B	154 160	09/2000 → 08/2005		4,0	24	063522310160	**MSN2008**
80 EL 15 tector	F4AE0481C	110	09/2000 → 08/2003		4,0	24	063522310160	**MSN2008**
80 EL 17 tector, 80 EL 17 P tector	F4AE0481A	125	09/2003 → 08/2005		4,0	24	063522310160	**MSN2008**
90 E 17 K tector, 90 E 17 DK tector	F4AE0481A	125	09/2000 → 09/2005		4,0	24	063522310160	**MSN2008**
90 E 17, 90 E 17D tector, 90 E 17 DP tector, 90 E 18 tector	F4AE0481A, F4AE3481B	125 130	09/2000 → 09/2005		4,0	24	063522310160	**MSN2008**
90 E 18 K tector, 90 E 18 DK tector	F4AE0681E	134	09/2000 → 09/2005		4,0	24	063522310160	**MSN2008**
90 E 18 tector, 90 E 18 D tector, 90 E 18 DP tector	F4AE0681E	130 134	09/2000 → 09/2005		4,0	24	063522310160	**MSN2008**
90 E 21 K tector, 90 E 21 DK tector	F4AE0681D	154	09/2000 → 08/2003		4,0	24	063522310160	**MSN2008**
90 E 21, 90 E 21 D tector, 90 E 21 DP tector, 90 E 22 tector	F4AE0681D, F4AE3681B	154 160	09/2000 → 08/2005		4,0	24	063522310160	**MSN2008**
95 E 15 W	8060.25R.4750, 8060.25R.4755, 8060.25R.4760, 8060.25R.4764, 8060.45R.5050, 8060.45R.5051	105	11/1993 →		4,0	24	063216741010	**MSN521**
95 E 15 W	8060.25R.4750, 8060.25R.4755, 8060.25R.4760, 8060.25R.4764, 8060.45R.5050, 8060.45R.5051	105	11/1993 → 12/1994		4,0	24	063522310110	**MSN2045**
95 E 21 W	8060.45.4700, 8060.45.4702, 8060.45.4704, 8060.45.4706, 8060.45.4708, 8060.45.5250, 8060.45.5251, 8060.45.5255	152	11/1993 → 08/2000		4,0	24	063216741010	**MSN521**

		kW ÷ kW		i	kW	V	LONG	SHORT
IVECO								
EuroCargo								
tector 65 E 13	F4AE0481D	95	09/2000 → 08/2003		4,0	24	063522310160	**MSN2008**
EuroStar								
LD 190 E 38 P	8460.41L TCA	276	01/1993 → 07/2000		5,4	24	063524160520	**MSN2063**
LD 240 E 38	8460.41L.5020	276	01/1993 → 11/2000		5,4	24	063524160520	**MSN2063**
LD 260 E 38 P	8460.41L TCA	276	01/1993 → 09/1995		5,4	24	063524160520	**MSN2063**
LD 400 E 38 TXP,LD 440 E 38 TXP	8460.41L TCA, 8460.41L.5020, 8460.41N	276	01/1993 → 11/2000		5,4	24	063524160520	**MSN2063**
LD 440 E 38 T	8460.41L TCA, 8460.41N	276	04/1993 → 11/2000		5,4	24	063524160520	**MSN2063**
LD 440 E 38 TZ	8460.41L TCA, 8460.41N	276	04/1993 → 11/2000		5,4	24	063524160520	**MSN2063**
EuroTech MH								
MH 190 E 27 K	F2BE0681C, F2BE0681F	200	09/1998 → 07/2000		4,0	24	063523680820	**MSN2057**
EuroTech MP								
400 E 38 T, 440 E 38 T, 440 E 38 T /P	8460.41L.5020, 8460.41N	276	09/1992 → 11/2000		5,5	24	063524160110	**MSN2061**
400 E 38 T, 440 E 38 T, 440 E 38 T /P	8460.41L.5020, 8460.41N	276	09/1992 → 11/2000		5,4	24	063524160520	**MSN2063**
MP 180 E 34	8460.41K.406	254	04/1992 → 12/1993		5,4	24	063524160520	**MSN2063**
MP 180 E 38	8460.41L.5020	276	09/1992 → 12/1993		5,5	24	063524160110	**MSN2061**
MP 180 E 38	8460.41L.5020	276	09/1992 → 12/1993		5,4	24	063524160520	**MSN2063**
MP 190 E 34	8460.41K.406	254	01/1993 → 07/2000		5,4	24	063524160520	**MSN2063**
MP 190 E 38	8460.41L TCA	276	01/1993 → 07/2000		5,4	24	063524160520	**MSN2063**
MP 240 E 30 PS	8460.41C. TCA	221	01/1997 → 12/2002		5,4	24	063524160520	**MSN2063**
MP 240 E 34	8460.41K. TCA	254	09/1995 → 12/1996		5,4	24	063524160520	**MSN2063**
MP 240 E 38	8460.41L.5020	276	09/1992 → 11/2000		5,5	24	063524160110	**MSN2061**
MP 240 E 38	8460.41L.5020	276	01/1992 → 07/2000		5,4	24	063524160520	**MSN2063**
MP 260 E 38 P	8460.41N	276	01/1994 → 07/2000		5,4	24	063524160520	**MSN2063**
MP 400 E 34 T, MP 440 E 34 T	8460.41K.406	254	04/1992 → 12/2000		5,4	24	063524160520	**MSN2063**
MP 400 E 38 TXP	8460.41L.5020, 8460.41N	276	11/1993 → 12/1996		5,5	24	063524160110	**MSN2061**
MP 400 E 38 TXP	8460.41L.5020, 8460.41N	276	11/1993 → 12/1996		5,4	24	063524160520	**MSN2063**
MP 440 E 38 TZ	8460.41L TCA	276	04/1993 → 11/2000		5,4	24	063524160520	**MSN2063**
EuroTech MT								
MT 180 E 24	8360.46R.416 TCA	176	07/1992 → 12/1996		4,0	24	063523680820	**MSN2057**
MT 180 E 24	8360.46R.416 TCA	176	07/1992 → 12/1996		5,4	24	063524160460	**MSN2062**
MT 180 E 24 K	8360.46R.416 TCA	176	01/1993 → 12/1996		4,0	24	063523680820	**MSN2057**

		kW ÷ kW		i	kW	V	LONG	SHORT
IVECO								
EuroTech MT								
MT 180 E 24 K	8360.46R.416 TCA	176	01/1993 → 12/1996		5,4	24	063524160460	**MSN2062**
MT 180 E 27	8360.46.417 TCA	196	07/1992 → 12/1996		4,0	24	063523680820	**MSN2057**
MT 180 E 27	8360.46.417 TCA	196	07/1992 → 12/1996		5,4	24	063524160460	**MSN2062**
MT 180 E 27 K	8360.46.417 TCA	196	07/1992 → 12/1996		4,0	24	063523680820	**MSN2057**
MT 180 E 27 K	8360.46.417 TCA	196	07/1992 → 12/1996		5,4	24	063524160460	**MSN2062**
MT 180 E 30 R	8460.41C.320	221	07/1992 → 12/1996		5,4	24	063524160520	**MSN2063**
MT 180 E 34 R	8460.41K.406	254	04/1992 → 12/1993		5,4	24	063524160520	**MSN2063**
MT 190 E 24	8360.46R.416 TCA	176	01/1997 → 08/1998		4,0	24	063523680820	**MSN2057**
MT 190 E 24	8360.46R.416 TCA	176	01/1997 → 08/1998		5,4	24	063524160460	**MSN2062**
MT 190 E 24 K	8360.46R.416 TCA	176	01/1997 → 08/1998		4,0	24	063523680820	**MSN2057**
MT 190 E 24 K	8360.46R.416 TCA	176	01/1997 → 08/1998		5,4	24	063524160460	**MSN2062**
MT 190 E 27	8360.46.417 TCA	196	01/1997 → 08/1998		4,0	24	063523680820	**MSN2057**
MT 190 E 27	8360.46.417 TCA	196	01/1997 → 08/1998		5,4	24	063524160460	**MSN2062**
MT 190 E 27 K	8360.46.417 TCA	196	01/1997 → 08/1998		4,0	24	063523680820	**MSN2057**
MT 190 E 27 K	8360.46.417 TCA	196	01/1997 → 08/1998		5,4	24	063524160460	**MSN2062**
MT 190 E 30	8460.41C.320	221	01/1997 → 08/1998		5,4	24	063524160520	**MSN2063**
MT 190 E 30 K	8460.41C.320	221	01/1997 → 08/1998		5,4	24	063524160520	**MSN2063**
MT 400 E 30 T	8460.41C.320	221	04/1992 → 08/1998		5,4	24	063524160520	**MSN2063**
MT 400 E 34 T	8460.41K.406	254	04/1992 → 08/1998		5,4	24	063524160520	**MSN2063**
EuroTrakker								
MP 180 E 25 W	8460.41 T	185	05/1999 → 11/2000		5,4	24	063524160520	**MSN2063**
MP 190 E 30 H	8460.41C.	221	01/1993 → 07/2000		5,4	24	063524160520	**MSN2063**
MP 190 E 30 W	8460.41C.	221	01/1993 → 07/2000		5,4	24	063524160520	**MSN2063**
MP 190 E 30 W	8460.41C.	221	11/1999 → 07/2000		5,4	24	063524160520	**MSN2063**
MP 190 E 34 H	8460.41K.	254	01/1993 → 07/2000		5,4	24	063524160520	**MSN2063**
MP 190 E 34 W	8460.41K. TCA	254	11/1999 → 07/2000		5,4	24	063524160520	**MSN2063**
MP 190 E 34 W	8460.41K.	254	01/1993 → 07/2000		5,4	24	063524160520	**MSN2063**
MP 260 E 30 H	8460.41C.	221	01/1993 → 07/2000		5,4	24	063524160520	**MSN2063**
MP 260 E 30 W	8460.41C., 8460.41C. TCA	221	11/1999 → 07/2000		5,4	24	063524160520	**MSN2063**
MP 260 E 34 H	8460.41K.	254	01/1993 → 07/2000		5,4	24	063524160520	**MSN2063**
MP 260 E 34 H	8460.41K., 8460.41K. TCA	254	11/1999 → 07/2000		5,4	24	063524160520	**MSN2063**
MP 260 E 34 W	8460.41K.	254	01/1993 → 07/2000		5,4	24	063524160520	**MSN2063**
MP 260 E 34 W	8460.41K., 8460.41K. TCA	254	11/1999 → 07/2000		5,4	24	063524160520	**MSN2063**
MP 340 E 34 H	8460.41K.	254	01/1993 → 07/2000		5,4	24	063524160520	**MSN2063**
MP 340 E 34 H	8460.41K., 8460.41K. TCA	254	11/1999 → 07/2000		5,4	24	063524160520	**MSN2063**

		kW ÷ kW		i	kW	V	LONG	SHORT
IVECO								
EuroTrakker								
MP 380 E 34 H	8460.41K., 8460.41K. TCA	254	11/1999 → 07/2000		5,4	24	063524160520	**MSN2063**
MP 380 E 34 H	8460.41K.	254	01/1993 → 07/2000		5,4	24	063524160520	**MSN2063**
MP 380 E 34 W	8460.41K., 8460.41K. TCA	254	11/1999 → 07/2000		5,4	24	063524160520	**MSN2063**
MP 400 E 34 HT	8460.41K., 8460.41K. TCA	254	01/1993 → 12/2000		5,4	24	063524160520	**MSN2063**
MP 440 E 34 HT	8460.41K., 8460.41K. TCA	254	01/1993 → 07/2000		5,4	24	063524160520	**MSN2063**
GAMMA Z								
Z 110			06/1986 → 01/1987		3,0	12	063522300090	**MSN2040**
Z 120 TA			02/1986 → 01/1987		3,0	12	063522300090	**MSN2040**
Z 220			06/1986 → 01/1987		3,0	12	063522300090	**MSN2040**
Z 220 T			02/1986 → 01/1987		3,0	12	063522300090	**MSN2040**
Z 230 T			07/1986 → 01/1987		3,0	12	063522300090	**MSN2040**
Z 235 T			10/1986 →		3,0	12	063522300090	**MSN2040**
Z 340 T			06/1986 → 01/1987		3,0	12	063522300090	**MSN2040**
M								
115-17	8060.25.600	130	01/1986 → 12/1991		4,0	24	063216731010	**MSN213**
115-17	8060.24.601	124	09/1983 → 12/1985		4,0	24	063216731010	**MSN213**
115-17 H	8060.25.600	130	01/1986 → 12/1991		4,0	24	063216731010	**MSN213**
135-17	8060.24.601	124	09/1983 → 12/1985		4,0	24	063216731010	**MSN213**
135-17	8060.25.600	130	01/1986 → 12/1991		4,0	24	063216731010	**MSN213**
135-17 H	8060.25.600	130	01/1986 → 12/1992		4,0	24	063216731010	**MSN213**
135-17 T	8060.25.600	130	01/1986 → 12/1991		4,0	24	063216731010	**MSN213**
135-17 T	8060.24.601	124	09/1983 → 12/1985		4,0	24	063216731010	**MSN213**
145-17	8060.25.600	130	02/1986 → 12/1991	 →296081	4,0	24	063216741010	**MSN521**
145-17	8060.25.600	130	02/1986 → 12/1991	 296082 →	4,0	24	063522310110	**MSN2045**
159-17	8360.05.254	124	07/1982 → 09/1986		4,0	24	063216741010	**MSN521**
165-24 R	8220.22.002, 8220.22.102	177	01/1985 → 12/1985		5,5	24	063524160110	**MSN2061**
165-24 R	8220.22.002, 8220.22.102	177	12/1982 → 09/1986		5,5	24	063524160110	**MSN2061**
165-24 T	8220.22.002, 8220.22.102	177	12/1982 → 09/1986		5,5	24	063524160110	**MSN2061**
175-17	8060.25.600	130	09/1986 → 12/1992		4,0	24	063216741010	**MSN521**
175-17	8060.25.600	130	09/1986 → 07/1992		4,0	24	063522310110	**MSN2045**
175-24	8460.21.002, 8460.21.010	176 178	09/1986 → 07/1992		5,5	24	063524160110	**MSN2061**

		kW ÷ kW			kW	V	LONG	SHORT
IVECO								
M								
175-24 T	8460.21.002, 8460.21.010	176 178	09/1986 → 07/1992		5,5	24	063524160110	**MSN2061**
MK								
110-13 A	BF6L 913 T, F6L 913	96 99	01/1983 → 12/1991		3,0	12	063522300060	**MSN2038**
110-13 A	BF6L 913 T, F6L 913	96 99	01/1983 → 03/1985		2,7	12	063523623050	**MSN2053**
110-13 A	BF6L 913 T, F6L 913	96 99	03/1986 → 12/1991		4,0	24	063523680010	**MSN2055**
110-13 AH	BF6L 913 T, F6L 913	96 99	01/1983 → 12/1985		3,0	12	063522300060	**MSN2038**
110-13 AH	BF6L 913 T, F6L 913	96 99	01/1983 → 03/1985		2,7	12	063523623050	**MSN2053**
110-13 AH	BF6L 913 T, F6L 913	96 99	01/1983 → 12/1985		4,0	24	063523680010	**MSN2055**
110-16 A	BF6L 913	118 124	03/1986 → 12/1991		4,0	24	063523680010	**MSN2055**
110-16 AH	BF6L 913	118 124	03/1986 → 12/1991		4,0	24	063523680010	**MSN2055**
130-13 A	BF6L 913 T, F6L 913	96 99	01/1983 → 12/1991		3,0	12	063522300060	**MSN2038**
130-13 A	BF6L 913 T, F6L 913	96 99	01/1983 → 03/1985		2,7	12	063523623050	**MSN2053**
130-13 A	BF6L 913 T, F6L 913	96 99	03/1986 → 05/1989		4,0	24	063523680010	**MSN2055**
130-13 AH	BF6L 913 T, F6L 913	96 99	01/1983 → 12/1991		3,0	12	063522300060	**MSN2038**
130-13 AH	BF6L 913 T, F6L 913	96 99	01/1983 → 03/1985		2,7	12	063523623050	**MSN2053**
130-13 AH	BF6L 913 T, F6L 913	96 99	03/1986 → 05/1989		4,0	24	063523680010	**MSN2055**
130-16 A	BF6L 913	118 124	03/1986 → 10/1991		4,0	24	063523680010	**MSN2055**
130-16 AH	BF6L 913	118 124	03/1986 → 10/1991		4,0	24	063523680010	**MSN2055**
75-9 A	BF4L 913 T, F4L 913	64	01/1983 → 05/1989		3,0	12	063522300060	**MSN2038**
75-9 A	BF4L 913 T, F4L 913	64	01/1983 → 02/1986		2,7	12	063523623050	**MSN2053**
75-9 A	BF4L 913 T, F4L 913	64	11/1985 → 05/1989		4,0	24	063523680010	**MSN2055**
75-9 H	F4L 913	64	01/1983 → 08/1985		3,0	12	063522300060	**MSN2038**
75-9 H	F4L 913	64	01/1983 → 08/1985		2,7	12	063523623050	**MSN2053**
75-9 H	F4L 913	64	01/1983 → 08/1985		4,0	24	063523680010	**MSN2055**
80-13 A	BF6L 913 T, F6L 913	96 99	01/1983 → 12/1991		3,0	12	063522300060	**MSN2038**

		kW ÷ kW				kW	V	LONG	SHORT
IVECO									
MK									
80-13 A	BF6L 913 T, F6L 913	96	99	01/1983 → 03/1985		2,7	12	063523623050	**MSN2053**
80-13 A	BF6L 913 T, F6L 913	96	99	03/1986 → 12/1991		4,0	24	063523680010	**MSN2055**
80-13 AH	BF6L 913 T, F6L 913	96	99	01/1983 → 12/1991		3,0	12	063522300060	**MSN2038**
80-13 AH	BF6L 913 T, F6L 913	96	99	01/1983 → 03/1985		2,7	12	063523623050	**MSN2053**
80-13 AH	BF6L 913 T, F6L 913	96	99	03/1986 → 12/1991		4,0	24	063523680010	**MSN2055**
80-13 AT	BF6L 913 T, F6L 913	96	99	01/1983 → 12/1991		3,0	12	063522300060	**MSN2038**
80-13 AT	BF6L 913 T, F6L 913	96	99	01/1983 → 03/1985		2,7	12	063523623050	**MSN2053**
80-13 AT	BF6L 913 T, F6L 913	96	99	03/1986 → 12/1991		4,0	24	063523680010	**MSN2055**
80-13 AW	BF6L 913 T, F6L 913	96	99	01/1983 → 12/1989		3,0	12	063522300060	**MSN2038**
80-13 AW	BF6L 913 T, F6L 913	96	99	01/1983 → 12/1991		3,0	12	063522300060	**MSN2038**
80-13 AW	BF6L 913 T, F6L 913	96	99	01/1983 → 03/1985		2,7	12	063523623050	**MSN2053**
80-13 AW	BF6L 913 T, F6L 913	96	99	01/1983 → 12/1991		4,0	24	063523680010	**MSN2055**
80-13 AW	BF6L 913 T, F6L 913	96	99	03/1986 → 12/1989		4,0	24	063523680010	**MSN2055**
80-16 A	BF6L 913	118	124	03/1986 → 12/1991		4,0	24	063523680010	**MSN2055**
80-16 AW	BF6L 913	118	124	01/1986 → 12/1989		4,0	24	063216731010	**MSN213**
80-16 AW	BF6L 913	118	124	03/1986 → 12/1989		4,0	24	063523680010	**MSN2055**
80-9 A	F4L 913	64		01/1983 → 02/1986		3,0	12	063522300060	**MSN2038**
80-9 A	F4L 913	64		01/1983 → 02/1986		2,7	12	063523623050	**MSN2053**
80-9 AH	F4L 913	64		01/1983 → 02/1986		3,0	12	063522300060	**MSN2038**
80-9 AH	F4L 913	64		01/1983 → 02/1986		2,7	12	063523623050	**MSN2053**
90-13 A	BF6L 913 T	96	99	01/1983 → 12/1991		4,0	24	063216731010	**MSN213**
90-13 A	BF6L 913 T	96	99	01/1983 → 12/1991		3,0	12	063522300060	**MSN2038**
90-13 A	BF6L 913 T	96	99	01/1983 → 03/1985		2,7	12	063523623050	**MSN2053**
90-13 A	BF6L 913 T	96	99	03/1986 → 12/1991		4,0	24	063523680010	**MSN2055**
90-13 AH	BF6L 913 T	96	99	01/1983 → 12/1991		4,0	24	063216731010	**MSN213**
90-13 AH	BF6L 913 T	96	99	01/1983 → 12/1991		3,0	12	063522300060	**MSN2038**
90-13 AH	BF6L 913 T	96	99	01/1983 → 03/1985		2,7	12	063523623050	**MSN2053**
90-13 AH	BF6L 913 T	96	99	03/1986 → 12/1991		4,0	24	063523680010	**MSN2055**
P/PA									
159-17 H	8360.05.254	124		07/1982 → 09/1986		4,0	24	063216741010	**MSN521**

		kW ÷ kW		i	kW	V	LONG	SHORT
IVECO								
P/PA-Haubenfahrzeuge								
120-13 ANW	BF6L 913 T, F6L 913	96 99	01/1983 → 09/1990		4,0	24	063523680010	**MSN2055**
TurboTech								
190-26	8460.21.102	191	01/1990 → 12/1992		5,5	24	063524160110	**MSN2061**
190-26 T	8460.21.102	191	01/1990 → 12/1992		5,5	24	063524160110	**MSN2061**
190-32	8460.41.102	234	01/1990 → 12/1992		5,5	24	063524160110	**MSN2061**
190-32 T	8460.41.102	234	01/1990 → 12/1992		5,5	24	063524160110	**MSN2061**
Zeta								
109-14	8060.05.289	101 102	11/1985 → 03/1991		4,0	24	063216731010	**MSN213**
109-14	8060.04.689	99	06/1983 → 12/1985		4,0	24	063216731010	**MSN213**
109-14 H	8060.05.289	101 102	11/1985 → 03/1991		4,0	24	063216731010	**MSN213**
109-14 H	8060.04.689	99	06/1983 → 12/1985		4,0	24	063216731010	**MSN213**
50-10	8340.04.200, 8340.04.250, 8340.04.300, 8340.04.362	74	01/1979 → 10/1983		4,0	24	063216741010	**MSN521**
50-10 H	8340.04.200, 8340.04.250, 8340.04.300, 8340.04.362	74	01/1979 → 10/1983		4,0	24	063216741010	**MSN521**
50-10 V	8340.04.200, 8340.04.250, 8340.04.300, 8340.04.362	74	01/1979 → 10/1983		4,0	24	063216741010	**MSN521**
50-8	8040.04.200	63	01/1983 → 12/1986		3,0	24	063217226010	**MSN237**
50-8 H	8040.04.200	63	01/1983 → 12/1986		3,0	24	063217226010	**MSN237**
50-8 V	8040.04.200	63	01/1983 → 12/1986		3,0	24	063217226010	**MSN237**
50-9	8040.05.230	65	01/1987 → 03/1991		4,0	24	063216741010	**MSN521**
50-9	8040.05.230	65	01/1987 → 03/1991		3,0	24	063217226010	**MSN237**
50-9 H	8040.05.230	65	01/1987 → 03/1991		4,0	24	063216741010	**MSN521**
50-9 H	8040.05.230	65	01/1987 → 03/1991		3,0	24	063217226010	**MSN237**
50-9 V	8040.05.230	65	01/1987 → 03/1991		4,0	24	063216741010	**MSN521**
50-9 V	8040.05.230	65	01/1987 → 03/1991		3,0	24	063217226010	**MSN237**
60-10	8340.04.200, 8340.04.250	74	05/1982 → 12/1986		4,0	24	063216741010	**MSN521**
60-10	8340.04.200, 8340.04.250	74	05/1982 → 12/1986		2,5	12	063217148010	**MSN229**
60-10	8340.04.200, 8340.04.250	74	05/1982 → 12/1986		2,5	12	063217410010	**MSN242**
60-10 H	8340.04.200, 8340.04.250	74	05/1982 → 12/1986		4,0	24	063216741010	**MSN521**
60-10 H	8340.04.200, 8340.04.250	74	05/1982 → 12/1986		2,5	12	063217148010	**MSN229**
60-10 H	8340.04.200, 8340.04.250	74	05/1982 → 12/1986		2,5	12	063217410010	**MSN242**

		kW ÷ kW		i	kW	V	LONG	SHORT
IVECO								
Zeta								
60-10 V	8340.04.200, 8340.04.250	74	05/1982 → 12/1986		4,0	24	063216741010	**MSN521**
60-10 V	8340.04.200, 8340.04.250	74	05/1982 → 12/1986		2,5	12	063217148010	**MSN229**
60-10 V	8340.04.200, 8340.04.250	74	05/1982 → 12/1986		2,5	12	063217410010	**MSN242**
60-11	8040.25.230 R	74	01/1987 → 03/1991		2,5	12	063217410010	**MSN242**
60-11 V	8040.25.230 R	74	01/1987 → 03/1991		2,5	12	063217410010	**MSN242**
60-8	8040.04.200	63	11/1979 → 12/1982		3,0	24	063217226010	**MSN237**
60-8	8040.04.200	63	11/1979 → 12/1983		3,0	24	063217226010	**MSN237**
60-8	8040.04.200	63	11/1979 → 12/1981		3,0	24	063217226010	**MSN237**
65-10	8340.04.200, 8340.04.250, 8340.04.300, 8340.04.350	74	05/1982 → 01/1987		4,0	24	063216741010	**MSN521**
65-10 H	8340.04.200, 8340.04.250, 8340.04.300, 8340.04.350	74	05/1982 → 01/1987		4,0	24	063216741010	**MSN521**
65-10 V	8340.04.200, 8340.04.250, 8340.04.300, 8340.04.350	74	05/1982 → 01/1987		4,0	24	063216741010	**MSN521**
65-12	8040.25.200	85	01/1987 → 03/1991		2,5	12	063217148010	**MSN229**
65-12	8040.25.200	85	01/1987 → 03/1991		3,0	24	063217226010	**MSN237**
65-12 H	8040.25.200	85	01/1987 → 03/1991		2,5	12	063217148010	**MSN229**
65-12 H	8040.25.200	85	01/1987 → 03/1991		3,0	24	063217226010	**MSN237**
65-12 V	8040.25.200	85	01/1987 → 03/1991		2,5	12	063217148010	**MSN229**
65-12 V	8040.25.200	85	01/1987 → 03/1991		3,0	24	063217226010	**MSN237**
65-9	8040.05.230	65	01/1987 → 03/1991		2,5	12	063217148010	**MSN229**
65-9	8040.05.230	65	01/1987 → 03/1991		3,0	24	063217226010	**MSN237**
79-10	8340.04.200, 8340.04.300	74	01/1983 → 01/1987		4,0	24	063216741010	**MSN521**
79-10 H	8340.04.200, 8340.04.300	74	01/1983 → 01/1987		4,0	24	063216741010	**MSN521**
79-10 V	8340.04.200, 8340.04.300	74	01/1983 → 01/1987		4,0	24	063216741010	**MSN521**
79-12	8040.25.200, 8040.25.220	85	01/1987 → 03/1991		3,0	24	063217226010	**MSN237**
79-12 H	8040.25.200, 8040.25.220	85	01/1987 → 03/1991		3,0	24	063217226010	**MSN237**
79-12 V	8040.25.200, 8040.25.220	85	01/1987 → 03/1991		3,0	24	063217226010	**MSN237**
79-13	8060.04.060, 8060.04.660	96	01/1983 → 06/1983		4,0	24	063522310100	**MSN2044**
79-14	8060.04.660	99	01/1983 → 11/1985		4,0	24	063216731010	**MSN213**
79-14	8060.05.280	101	07/1988 → 03/1991		4,0	24	063216741010	**MSN521**
79-14	8060.04.660	99	07/1983 → 11/1985		4,0	24	063522310100	**MSN2044**

		kW ÷ kW			kW	V	LONG	SHORT
IVECO								
Zeta								
79-14 H	8060.04.660	99	01/1983 → 11/1985		4,0	24	063216731010	**MSN213**
79-14 H	8060.04.660	99	07/1983 → 11/1985		4,0	24	063216731010	**MSN213**
79-14 H	8060.05.280	101	07/1988 → 03/1991		4,0	24	063216741010	**MSN521**
79-14 H	8060.04.660	99	07/1983 → 11/1985		4,0	24	063522310100	**MSN2044**
79-14 V	8060.04.660	99	01/1983 → 11/1985		4,0	24	063216731010	**MSN213**
79-14 V	8060.05.280	101	07/1988 → 03/1991		4,0	24	063216741010	**MSN521**
79-14 V	8060.04.660	99	07/1983 → 11/1985		4,0	24	063522310100	**MSN2044**
95-14	8060.04.669	101	11/1985 → 03/1991		4,0	24	063216731010	**MSN213**
95-14	8060.04.669	99	07/1983 → 10/1985		4,0	24	063216731010	**MSN213**
95-14 H	8060.04.669	99	07/1983 → 10/1985		4,0	24	063216731010	**MSN213**
95-14 H	8060.04.669	101	11/1985 → 03/1991		4,0	24	063216731010	**MSN213**
A 60-10	8340.04.040	73	11/1979 → 06/1988		4,0	24	063216741010	**MSN521**
A 70-12	8340.05.200	84	01/1983 → 01/1985		4,0	24	063216741010	**MSN521**
A 70-14	8060.05.246, 8060.05.285	101 102	05/1988 → 12/1992		4,0	24	063216741010	**MSN521**
MAN								
E 2000								
19.310 FALK	D 2866 LF23	228	05/2000 → 06/2003		5,4	24	063524160780	**MSN2064**
19.310 FALS	D 2866 LF23	228	05/2000 → 06/2003		5,4	24	063524160780	**MSN2064**
19.310 FLK	D 2866 LF23	228	05/2000 → 06/2003		5,4	24	063524160780	**MSN2064**
19.310 FLS	D 2866 LF23	228	05/2000 → 06/2003		5,4	24	063524160780	**MSN2064**
19.360 FALK	D 2866 LF24	265	07/2001 → 06/2003		5,4	24	063524160780	**MSN2064**
19.360 FALS	D 2866 LF24	265	07/2001 → 06/2003		5,4	24	063524160780	**MSN2064**
19.360 FLK	D 2866 LF24	265	07/2001 → 06/2003		5,4	24	063524160780	**MSN2064**
19.360 FLS	D 2866 LF24	265	07/2001 → 06/2003		5,4	24	063524160780	**MSN2064**
19.410 FALK	D 2866 LF25	301	07/2001 → 06/2003		5,4	24	063524160780	**MSN2064**
19.410 FALS	D 2866 LF25	301	07/2001 → 06/2003		5,4	24	063524160780	**MSN2064**
19.410 FLK	D 2866 LF25	301	07/2001 → 06/2003		5,4	24	063524160780	**MSN2064**
19.410 FLS	D 2866 LF25	301	07/2001 → 06/2003		5,4	24	063524160780	**MSN2064**
19.460 FALK	D 2876 LF 03	338	07/2001 → 06/2003		5,4	24	063524160780	**MSN2064**
19.460 FALS	D 2876 LF 03	338	07/2001 → 06/2003		5,4	24	063524160780	**MSN2064**
19.460 FLK	D 2876 LF 03	338	07/2001 → 06/2003		5,4	24	063524160780	**MSN2064**
19.460 FLS	D 2876 LF 03	338	07/2001 → 06/2003		5,4	24	063524160780	**MSN2064**
26.360 FAVLC	D 2866 LF24	265	05/2000 → 10/2003		5,4	24	063524160780	**MSN2064**
26.360 FAVLK	D 2866 LF24	265	05/2000 → 10/2003		5,4	24	063524160780	**MSN2064**
26.410 DFARC	D 2866 LF25	301	05/2000 → 10/2003		5,4	24	063524160780	**MSN2064**
26.410 DFRC, FAVLC	D 2866 LF25	301	05/2000 → 10/2003		5,4	24	063524160780	**MSN2064**
26.410 FAVLK	D 2866 LF25	301	05/2000 → 10/2003		5,4	24	063524160780	**MSN2064**
26.460 DFARC	D 2876 LF 03	338	05/2000 → 10/2003		5,4	24	063524160780	**MSN2064**
26.460 DFLRS	D 2876 LF 03	338	05/2000 → 10/2003		5,4	24	063524160780	**MSN2064**
26.460 FAVLC	D 2876 LF 03	338	05/2000 → 10/2003		5,4	24	063524160780	**MSN2064**
26.460 FAVLK	D 2876 LF 03	338	05/2000 → 10/2003		5,4	24	063524160780	**MSN2064**
28.310 FNLC	D 2866 LF23	228	09/2002 → 12/2003		5,4	24	063524160780	**MSN2064**
28.360 FANLC	D 2866 LF24	265	05/2000 → 11/2003		5,4	24	063524160780	**MSN2064**

		kW ÷ kW		i	kW	V	LONG	SHORT
MAN								
E 2000								
28.360 FANLK	D 2866 LF24	265	05/2000 → 11/2003		5,4	24	063524160780	**MSN2064**
28.360 FNALC	D 2866 LF24	265	05/2000 → 11/2003		5,4	24	063524160780	**MSN2064**
28.360 FNLC	D 2866 LF24	265	05/2000 → 11/2003		5,4	24	063524160780	**MSN2064**
28.410 FANLC	D 2866 LF25	301	05/2000 → 11/2003		5,4	24	063524160780	**MSN2064**
28.410 FANLK	D 2866 LF25	301	05/2000 → 11/2003		5,4	24	063524160780	**MSN2064**
28.410 FNLC	D 2866 LF25	301	05/2000 → 11/2003		5,4	24	063524160780	**MSN2064**
28.460 FANLC	D 2876 LF 03	338	05/2000 → 11/2003		5,4	24	063524160780	**MSN2064**
28.460 FANLK	D 2876 LF 03	338	05/2000 → 11/2003		5,4	24	063524160780	**MSN2064**
28.460 FNLC	D 2876 LF 03	338	05/2000 → 11/2003		5,4	24	063524160780	**MSN2064**
30.310 FNLC	D 2866 LF23	228	05/2000 → 06/2002		5,4	24	063524160780	**MSN2064**
30.360 FANLC	D 2866 LF24	265	05/2000 → 06/2003		5,4	24	063524160780	**MSN2064**
30.360 FANLK	D 2866 LF24	265	05/2000 → 06/2003		5,4	24	063524160780	**MSN2064**
30.360 FNLC	D 2866 LF24	265	05/2000 → 06/2003		5,4	24	063524160780	**MSN2064**
30.410 FANLC	D 2866 LF25	301	05/2000 → 06/2003		5,4	24	063524160780	**MSN2064**
30.410 FANLK	D 2866 LF25	301	05/2000 → 06/2003		5,4	24	063524160780	**MSN2064**
30.410 FNLC	D 2866 LF25	301	05/2000 → 06/2003		5,4	24	063524160780	**MSN2064**
30.460 FANLC	D 2876 LF 03	338	05/2000 → 06/2003		5,4	24	063524160780	**MSN2064**
30.460 FANLK	D 2876 LF 03	338	05/2000 → 06/2003		5,4	24	063524160780	**MSN2064**
30.460 FNLC	D 2876 LF 03	338	05/2000 → 06/2003		5,4	24	063524160780	**MSN2064**
32.310 VFLC	D 2866 LF23	228	05/2000 → 08/2002		5,4	24	063524160780	**MSN2064**
32.310 VFNLC	D 2866 LF23	228	05/2000 → 08/2002		5,4	24	063524160780	**MSN2064**
32.360 VFLC	D 2866 LF24	265	05/2000 → 10/2003		5,4	24	063524160780	**MSN2064**
32.360 VFNLC	D 2866 LF24	265	05/2000 → 10/2003		5,4	24	063524160780	**MSN2064**
32.410 VFARK	D 2866 LF25	301	05/2000 → 10/2003		5,4	24	063524160780	**MSN2064**
32.410 VFLC,VFRC, VFLRC	D 2866 LF25	301	05/2000 → 10/2003		5,4	24	063524160780	**MSN2064**
32.410 VFNLC	D 2866 LF25	301	05/2000 → 10/2003		5,4	24	063524160780	**MSN2064**
32.460 VFLC, VFLRC	D 2876 LF 03	338	05/2000 → 10/2003		5,4	24	063524160780	**MSN2064**
32.460 VFNLC	D 2876 LF 03	338	05/2000 → 10/2003		5,4	24	063524160780	**MSN2064**
33.360 DFAK, DFALK	D 2866 LF24	265	05/2000 → 06/2003		5,4	24	063524160780	**MSN2064**
33.360 DFALC	D 2866 LF24	265	05/2000 → 06/2003		5,4	24	063524160780	**MSN2064**
33.360 DFALS	D 2866 LF24	265	04/2001 → 06/2003		5,4	24	063524160780	**MSN2064**
33.360 DFLC	D 2866 LF24	265	05/2000 → 06/2003		5,4	24	063524160780	**MSN2064**
33.360 DFLK	D 2866 LF24	265	05/2000 → 06/2003		5,4	24	063524160780	**MSN2064**
33.360 DFLS	D 2866 LF24	265	05/2000 → 06/2003		5,4	24	063524160780	**MSN2064**
33.410 DFAK, DFALK	D 2866 LF25	301	05/2000 → 06/2003		5,4	24	063524160780	**MSN2064**
33.410 DFALC	D 2866 LF25	301	05/2000 → 06/2003		5,4	24	063524160780	**MSN2064**
33.410 DFALS	D 2866 LF25	301	04/2001 → 06/2003		5,4	24	063524160780	**MSN2064**
33.410 DFLC	D 2866 LF25	301	05/2000 → 06/2003		5,4	24	063524160780	**MSN2064**
33.410 DFLK	D 2866 LF25	301	05/2000 → 06/2003		5,4	24	063524160780	**MSN2064**
33.410 DFLS	D 2866 LF25	301	05/2000 → 06/2003		5,4	24	063524160780	**MSN2064**
33.460 DFAK, DFALK	D 2876 LF 03	338	05/2000 → 06/2003		5,4	24	063524160780	**MSN2064**
33.460 DFALC	D 2876 LF 03	338	05/2000 → 06/2003		5,4	24	063524160780	**MSN2064**
33.460 DFALS	D 2876 LF 03	338	04/2001 → 06/2003		5,4	24	063524160780	**MSN2064**

		kW ÷ kW		i	kW	V	LONG	SHORT
MAN								
E 2000								
33.460 DFLC	D 2876 LF 03	338	05/2000 → 06/2003		5,4	24	063524160780	**MSN2064**
33.460 DFLK	D 2876 LF 03	338	05/2000 → 06/2003		5,4	24	063524160780	**MSN2064**
33.460 DFLS	D 2876 LF 03	338	05/2000 → 06/2003		5,4	24	063524160780	**MSN2064**
35.360 VFAK	D 2866 LF24	265	05/2000 → 09/2003		5,4	24	063524160780	**MSN2064**
35.410 FVNLC	D 2866 LF25	301	05/2000 → 10/2003		5,4	24	063524160780	**MSN2064**
35.410 VFAK	D 2866 LF25	301	05/2000 → 10/2003		5,4	24	063524160780	**MSN2064**
35.460 FVNLC	D 2876 LF 03	338	05/2000 → 10/2003		5,4	24	063524160780	**MSN2064**
35.460 VFAK	D 2876 LF 03	338	05/2000 → 10/2003		5,4	24	063524160780	**MSN2064**
41.410 VFAK	D 2866 LF25	301	05/2000 → 09/2003		5,4	24	063524160780	**MSN2064**
41.460 DFVS, DFVLS	D 2876 LF 03	338	06/2000 → 09/2003		5,4	24	063524160780	**MSN2064**
41.460 VFAK	D 2876 LF 03	338	05/2000 → 09/2003		5,4	24	063524160780	**MSN2064**
50.410 VFAK	D 2866 LF25	301	05/2000 → 09/2003		5,4	24	063524160780	**MSN2064**
50.410 VFAVK, VFAV-G	D 2866 LF25	301	03/2001 → 09/2003		5,4	24	063524160780	**MSN2064**
50.410 VFK	D 2866 LF25	301	05/2000 → 09/2003		5,4	24	063524160780	**MSN2064**
50.410 VFVK, VFV-G	D 2866 LF25	301	10/2000 → 09/2003		5,4	24	063524160780	**MSN2064**
50.460 VFAK	D 2876 LF 03	338	05/2000 → 09/2003		5,4	24	063524160780	**MSN2064**
50.460 VFAVK, VFAV-G	D 2876 LF 03	338	03/2001 → 09/2003		5,4	24	063524160780	**MSN2064**
50.460 VFK	D 2876 LF 03	338	05/2000 → 09/2003		5,4	24	063524160780	**MSN2064**
50.460 VFVK, VFV-G	D 2876 LF 03	338	10/2000 → 09/2003		5,4	24	063524160780	**MSN2064**
EL								
EL 202,EL 222	D 0826 LUH 03, D 0826 LUH 05, D 0826 LUH 12	157 169	01/1993 → 06/1997		5,4	24	063524160780	**MSN2064**
EL 202,EL 262	D 0826 LUH	184	04/1994 → 06/1997		5,4	24	063524160780	**MSN2064**
EL 262	D 2866 LUH 22	191	07/1998 → 09/2001		5,4	24	063524160780	**MSN2064**
EM 192	D 0826 LOH 06	140	10/1993 → 06/1997		4,0	24	063522310290	**MSN2048**
EM 192	D 0826 LOH 06	140	10/1993 → 06/1997		5,4	24	063524160780	**MSN2064**
EM 222,EM 223	D 0826 LOH 15, D 0826 LUH 12	162	02/1996 → 06/2001		4,0	24	063522310290	**MSN2048**
EM 222,EM 223	D 0826 LOH 15, D 0826 LUH 12	162	02/1996 → 09/2001		5,4	24	063524160780	**MSN2064**
EM 223	D 0826 LOH 15	162	02/1996 → 06/2001		4,0	24	063522310290	**MSN2048**
EM 223	D 0826 LOH 15	162	02/1996 → 09/2001		5,4	24	063524160780	**MSN2064**
F 2000								
19.233 FCNG	E 2866 DF 01	170	09/1996 → 12/2001		5,4	24	063524160780	**MSN2064**
19.233 FKNG	E 2866 DF 01	170	01/1994 → 12/2001		5,4	24	063524160780	**MSN2064**
19.273 F, FL, FLL	D 2865 LF22	198	01/1994 → 12/1995		5,4	24	063524160020	**MSN2060**
19.273 F, FL, FLL	D 2865 LF22	198	01/1994 → 12/1995		5,4	24	063524160780	**MSN2064**
19.273 FA	D 2865 LF22	198	01/1994 → 12/1995		5,4	24	063524160020	**MSN2060**
19.273 FAK	D 2865 LF22	198	01/1994 → 12/1995		5,4	24	063524160020	**MSN2060**
19.273 FK	D 2865 LF22	198	01/1994 → 12/1995		5,4	24	063524160020	**MSN2060**

		kW ÷ kW		i	kW	V	MAGNETI MARELLI LONG	MAGNETI MARELLI SHORT
MAN								
F 2000								
19.273 FK	D 2865 LF22	198	01/1994 → 12/1995		5,4	24	063524160780	**MSN2064**
19.273 FS,19.273 FLS	D 2865 LF22	198	01/1994 → 12/1995		5,4	24	063524160020	**MSN2060**
19.293 FAC	D 2865 LF20, D 2865 LF24	213	04/1995 → 10/1996		5,4	24	063524160020	**MSN2060**
19.293 FAC	D 2865 LF20, D 2865 LF24	213	08/1996 → 09/2001		5,4	24	063524160780	**MSN2064**
19.293 FAK	D 2865 LF20, D 2865 LF24	213	04/1995 → 10/1996		5,4	24	063524160020	**MSN2060**
19.293 FAK	D 2865 LF20, D 2865 LF24	213	08/1996 → 01/2000		5,4	24	063524160780	**MSN2064**
19.293 FAS	D 2865 LF20, D 2865 LF24	213	04/1995 → 10/1996		5,4	24	063524160020	**MSN2060**
19.293 FAS	D 2865 LF20, D 2865 LF24	213	08/1996 → 09/2001		5,4	24	063524160780	**MSN2064**
19.293 FC,19.293 FLC,19.293 FLLC	D 2865 LF20, D 2865 LF24	213	04/1995 → 10/1996		5,4	24	063524160020	**MSN2060**
19.293 FC,19.293 FLC,19.293 FLLC	D 2865 LF20, D 2865 LF24	213	08/1996 → 09/2001		5,4	24	063524160780	**MSN2064**
19.293 FK,19.293 FLK	D 2865 LF20, D 2865 LF24	213	04/1995 → 10/1996		5,4	24	063524160020	**MSN2060**
19.293 FK,19.293 FLK	D 2865 LF20, D 2865 LF24	213	08/1996 → 09/2001		5,4	24	063524160780	**MSN2064**
19.293 FS,19.293 FLS,19.293 FLLS	D 2865 LF20, D 2865 LF24	213	04/1995 → 10/1996		5,4	24	063524160020	**MSN2060**
19.293 FS,19.293 FLS,19.293 FLLS	D 2865 LF20, D 2865 LF24	213	08/1996 → 09/2001		5,4	24	063524160780	**MSN2064**
19.314 FAC		228	05/2001 → 08/2002		5,4	24	063524160780	**MSN2064**
19.314 FAK, FA-KI		228	05/2001 → 08/2002		5,4	24	063524160780	**MSN2064**
19.314 FAS	D 2866 LF34	228	06/1998 → 12/2001		5,4	24	063524160780	**MSN2064**
19.314 FC, FLC, FLLC, FLLW, FRC, FLRC, FLLRC, FLL, FLLR, F-N	D 2866 LF34	228	06/1998 → 12/2001		5,4	24	063524160780	**MSN2064**
19.314 FK, FLK, F-KI, FL-KI	D 2866 LF34	228	06/1998 → 12/2001		5,4	24	063524160780	**MSN2064**
19.314 FS, FLS, FLLS, FRS, FLRS, FLLRS	D 2866 LF34	228	06/1998 → 12/2001		5,4	24	063524160780	**MSN2064**
19.323 FAC	D 2865 LF23	235	01/1994 → 12/1995		5,4	24	063524160020	**MSN2060**
19.323 FAK	D 2865 LF23	235	01/1994 → 12/1995		5,4	24	063524160020	**MSN2060**
19.323 FAS	D 2865 LF23	235	01/1994 → 12/1995		5,4	24	063524160020	**MSN2060**

		kW ÷ kW		i	kW	V	LONG	SHORT
MAN								
F 2000								
19.323 FC,19.323 FLC,19.323 FLLC	D 2865 LF23	235	01/1994 → 12/1995		5,4	24	063524160020	**MSN2060**
19.323 FK,19.323 FLK	D 2865 LF23	235	01/1994 → 12/1995		5,4	24	063524160020	**MSN2060**
19.323 FS,19.323 FLS,19.323 FLLS	D 2865 LF23	235	01/1994 → 12/1995		5,4	24	063524160020	**MSN2060**
19.343 FAC	D 2865 LF21	250	01/1994 → 07/1996		5,4	24	063524160020	**MSN2060**
19.343 FAC	D 2865 LF21	250	08/1996 → 09/2001		5,4	24	063524160780	**MSN2064**
19.343 FAK	D 2865 LF21	250	01/1994 → 07/1996		5,4	24	063524160020	**MSN2060**
19.343 FAK	D 2865 LF21	250	08/1996 → 09/2001		5,4	24	063524160780	**MSN2064**
19.343 FAS	D 2865 LF21	250	01/1994 → 07/1996		5,4	24	063524160020	**MSN2060**
19.343 FC,19.343 FLC,19.343 FLLC	D 2865 LF21	250	01/1994 → 07/1996		5,4	24	063524160020	**MSN2060**
19.343 FC,19.343 FLC,19.343 FLLC	D 2865 LF21	250	08/1996 → 09/2001		5,4	24	063524160780	**MSN2064**
19.343 FK,19.343 FLK	D 2865 LF21	250	01/1994 → 07/1996		5,4	24	063524160020	**MSN2060**
19.343 FK,19.343 FLK	D 2865 LF21	250	08/1996 → 09/2001		5,4	24	063524160780	**MSN2064**
19.343 FS,19.343 FLS,19.343 FLLS	D 2865 LF21	250	01/1994 → 07/1996		5,4	24	063524160020	**MSN2060**
19.343 FS,19.343 FLS,19.343 FLLS	D 2865 LF21	250	08/1996 → 09/2001		5,4	24	063524160780	**MSN2064**
19.364 FAC	D 2866 LF35	265	06/1998 → 12/2001		5,4	24	063524160780	**MSN2064**
19.364 FAK, FA-KI	D 2866 LF35	265	06/1998 → 12/2001		5,4	24	063524160780	**MSN2064**
19.364 FAS	D 2866 LF35	265	06/1998 → 12/2001		5,4	24	063524160780	**MSN2064**
19.364 FC, FLC, FLLC, FLLW, FRC, FLRC, FLLRC, FLL, FLLR, F-N	D 2866 LF35	265	06/1998 → 12/2001		5,4	24	063524160780	**MSN2064**
19.364 FK, FLK, F-KI, FL-KI	D 2866 LF35	265	06/1998 → 12/2001		5,4	24	063524160780	**MSN2064**
19.364 FS, FLS, FLLS, FRS, FLRS, FLLRS	D 2866 LF35	265	06/1998 → 12/2001		5,4	24	063524160780	**MSN2064**
19.373 FAC	D 2866 LF21	272	01/1994 → 12/1995		5,4	24	063524160780	**MSN2064**
19.373 FAK, FA-KI	D 2866 LF21	272	01/1994 → 12/1995		5,4	24	063524160780	**MSN2064**
19.373 FAS	D 2866 LF21	272	01/1994 → 12/1995		5,4	24	063524160780	**MSN2064**
19.373 FC, FLC, FLLC, FRC, FLRC, F-NL	D 2866 LF21	272	06/1996 → 07/1996		5,4	24	063524160020	**MSN2060**
19.373 FC, FLC, FLLC, FRC, FLRC, F-NL	D 2866 LF21	272	01/1994 → 09/2001		5,4	24	063524160780	**MSN2064**
19.373 FK, FLK, F-KI, FL-KI	D 2866 LF21	272	01/1994 → 12/1995		5,4	24	063524160780	**MSN2064**
19.373 FS, FLS, FLLS, FRS, FLRS, FLLRS	D 2866 LF21	272	01/1994 → 12/1995		5,4	24	063524160780	**MSN2064**
19.403 FAC	D 2866 LF20	294	01/1994 → 12/2001		5,4	24	063524160780	**MSN2064**
19.403 FAK, FA-KI	D 2866 LF20	294	01/1994 → 12/2001		5,4	24	063524160780	**MSN2064**
19.403 FAS	D 2866 LF20	294	01/1994 → 12/2001		5,4	24	063524160780	**MSN2064**

		kW ÷ kW		i	kW	V	MAGNETI MARELLI LONG	MAGNETI MARELLI SHORT
MAN								
F 2000								
19.403 FC, FLC, FLLC, FRC, FLRC, F-NL	D 2866 LF20	294	01/1994 → 12/2001		5,4	24	063524160780	**MSN2064**
19.403 FK, FLK, F-KI, FL-KI	D 2866 LF20	294	01/1994 → 12/2001		5,4	24	063524160780	**MSN2064**
19.403 FS, FLS, FLLS, FRS, FLRS, FLLRS	D 2866 LF20	294	01/1994 → 12/2001		5,4	24	063524160780	**MSN2064**
19.414 FAC	D 2866 LF31	301	06/1998 → 12/2001		5,4	24	063524160780	**MSN2064**
19.414 FAK, FA-KI	D 2866 LF31	301	06/1998 → 12/2001		5,4	24	063524160780	**MSN2064**
19.414 FAS	D 2866 LF31	301	06/1998 → 12/2001		5,4	24	063524160780	**MSN2064**
19.414 FC, FLC, FLLC, FRC, FLRC, FLLRC, FLL, FLLR, F-NL	D 2866 LF31	301	06/1998 → 12/2001		5,4	24	063524160780	**MSN2064**
19.414 FK, FLK, F-KI, FL-KI	D 2866 LF31	301	06/1998 → 12/2001		5,4	24	063524160780	**MSN2064**
19.414 FS, FLS, FLLS, FRS, FLRS, FLLRS	D 2866 LF31	301	06/1998 → 12/2001		5,4	24	063524160780	**MSN2064**
19.423 FAC	D 2866 LF22	309	01/1994 → 12/1995		5,4	24	063524160780	**MSN2064**
19.423 FAK, FA-KI	D 2866 LF22	309	01/1994 → 12/1995		5,4	24	063524160780	**MSN2064**
19.423 FAS	D 2866 LF22	309	01/1994 → 12/1995		5,4	24	063524160780	**MSN2064**
19.423 FC, FLC, FLLC, F-NL	D 2866 LF22	309	01/1994 → 12/1995		5,4	24	063524160780	**MSN2064**
19.423 FK, FLK, F-KI, FL-KI	D 2866 LF22	309	01/1994 → 12/1995		5,4	24	063524160780	**MSN2064**
19.423 FS, FLS, FLLS	D 2866 LF22	309	01/1994 → 12/1995		5,4	24	063524160780	**MSN2064**
19.463 FAC	D 2876 LF 02	338	01/1994 → 12/2001		5,4	24	063524160780	**MSN2064**
19.463 FAK, FA-KI	D 2876 LF 02	338	01/1994 → 12/2001		5,4	24	063524160780	**MSN2064**
19.463 FAS	D 2876 LF 02	338	01/1994 → 12/2001		5,4	24	063524160780	**MSN2064**
19.463 FC, FLC, FLLC, FRC, FLRC, F-NL	D 2876 LF 02	338	01/1994 → 12/2001		5,4	24	063524160780	**MSN2064**
19.463 FK, FLK, F-KI, FL-KI	D 2876 LF 02	338	01/1994 → 12/2001		5,4	24	063524160780	**MSN2064**
19.463 FS, FLS, FLLS, FRS, FLRS, FLLRS	D 2876 LF 02	338	01/1994 → 12/2001		5,4	24	063524160780	**MSN2064**
19.464 FAC	D 2876 LF 06	338	06/1998 → 12/2002		5,4	24	063524160780	**MSN2064**
19.464 FAK, FA-KI	D 2876 LF 06	338	06/1998 → 09/2001		5,4	24	063524160780	**MSN2064**
19.464 FAS	D 2876 LF 06	338	06/1998 → 09/2001		5,4	24	063524160780	**MSN2064**
19.464 FC, FLC, FLLC, FLL, FRC, FLLR, FLLRC, FLLW, F-NL	D 2876 LF 06	338	06/1998 → 09/2001		5,4	24	063524160780	**MSN2064**
19.464 FK, FLK, F-KI, FL-KI	D 2876 LF 06	338	06/1998 → 09/2001		5,4	24	063524160780	**MSN2064**
19.464 FS, FLS, FLLS, FRS, FLRS, FLLRS	D 2876 LF 06	338	06/1998 → 09/2001		5,4	24	063524160780	**MSN2064**

		kW ÷ kW		i	kW	V	LONG	SHORT
MAN								
F 2000								
23.293 FNLLC	D 2865 LF20, D 2865 LF24	213	04/1995 → 07/1996		5,4	24	063524160020	**MSN2060**
23.293 FNLLC	D 2865 LF20, D 2865 LF24	213	08/1996 → 01/2000		5,4	24	063524160780	**MSN2064**
23.314 FNLLC		228	05/2001 → 12/2002		5,4	24	063524160780	**MSN2064**
23.343 FNLLC	D 2865 LF21	250	01/1994 → 07/1996		5,4	24	063524160020	**MSN2060**
23.343 FNLLC	D 2865 LF21	250	08/1996 → 01/2000		5,4	24	063524160780	**MSN2064**
23.364 FNLLC		265	05/2001 → 12/2002		5,4	24	063524160780	**MSN2064**
23.403 FNLLC	D 2866 LF20	294	01/1994 → 09/2001		5,4	24	063524160780	**MSN2064**
23.463 FNLLC	D 2876 LF 02	338	01/1994 → 09/2001		5,4	24	063524160780	**MSN2064**
24.273 FNLLC	D 2865 LF22	198	01/1994 → 12/1995		5,4	24	063524160020	**MSN2060**
24.293 FNLLC	D 2865 LF24	213	01/1994 → 07/1996		5,4	24	063524160020	**MSN2060**
24.293 FNLLC	D 2865 LF24	213	08/1996 → 01/2000		5,4	24	063524160780	**MSN2064**
24.314 FNLLRC		228	05/2001 → 08/2002		5,4	24	063524160780	**MSN2064**
24.323 FNLLC	D 2865 LF23	235	01/1994 → 12/1995		5,4	24	063524160020	**MSN2060**
24.343 FNLLC	D 2865 LF21	250	01/1994 → 07/1996		5,4	24	063524160020	**MSN2060**
24.343 FNLLC	D 2865 LF21	250	08/1996 → 01/2000		5,4	24	063524160780	**MSN2064**
24.364 FNLLRC		265	05/2001 → 09/2001		5,4	24	063524160780	**MSN2064**
24.373 FNLLC	D 2866 LF21	272	01/1994 → 12/1995		5,4	24	063524160780	**MSN2064**
24.403 FNLLC	D 2866 LF20	294	01/1994 → 09/2001		5,4	24	063524160780	**MSN2064**
24.414 FNLLRC		301	05/2001 → 12/2001		5,4	24	063524160780	**MSN2064**
24.423 FNLLC	D 2866 LF22	309	01/1994 → 12/1995		5,4	24	063524160780	**MSN2064**
24.463 FNLLC	D 2876 LF 02	338	01/1994 → 09/2001		5,4	24	063524160780	**MSN2064**
24.464 FNLLRC		338	05/2001 → 09/2001		5,4	24	063524160780	**MSN2064**
26.233 FVLCNG	E 2866 DF 01	170	09/1996 → 08/2002		5,4	24	063524160780	**MSN2064**
26.233 FVL-KO		170	03/2000 → 08/2002		5,4	24	063524160780	**MSN2064**
26.273 DFC,26.273 DFLC	D 2865 LF22	198	01/1994 → 12/1995		5,4	24	063524160020	**MSN2060**
26.273 DFK,26.273 DFLK	D 2865 LF22	198	01/1994 → 12/1995		5,4	24	063524160020	**MSN2060**
26.273 DFS,26.273 DFLS	D 2865 LF22	198	01/1994 → 12/1995		5,4	24	063524160020	**MSN2060**
26.273 FNLC,26.273 FNLLC,26.273 FVLC	D 2865 LF22	198	01/1994 → 12/1995		5,4	24	063524160020	**MSN2060**
26.273 FNLS,26.273 FVLS	D 2865 LF22	198	01/1994 → 12/1995		5,4	24	063524160020	**MSN2060**
26.293 DFC,26.293 DFLC	D 2865 LF20, D 2865 LF24	213	04/1995 → 07/1996		5,4	24	063524160020	**MSN2060**
26.293 DFC,26.293 DFLC	D 2865 LF20, D 2865 LF24	213	04/1995 → 01/2000		5,4	24	063524160780	**MSN2064**
26.293 DFK,26.293 DFLK	D 2865 LF20, D 2865 LF24	213	04/1995 → 07/1996		5,4	24	063524160020	**MSN2060**
26.293 DFK,26.293 DFLK	D 2865 LF20, D 2865 LF24	213	04/1995 → 01/2000		5,4	24	063524160780	**MSN2064**

		kW ÷ kW		i	kW	V	LONG	SHORT
MAN								
F 2000								
26.293 DFS,26.293 DFLS	D 2865 LF20, D 2865 LF24	213	04/1995 → 07/1996		5,4	24	063524160020	**MSN2060**
26.293 DFS,26.293 DFLS	D 2865 LF20, D 2865 LF24	213	04/1995 → 01/2000		5,4	24	063524160780	**MSN2064**
26.293 FNLC,26.293 FNLLC,26.293 FVLC	D 2865 LF20, D 2865 LF24	213	04/1995 → 07/1996		5,4	24	063524160020	**MSN2060**
26.293 FNLC,26.293 FNLLC,26.293 FVLC	D 2865 LF20, D 2865 LF24	213	04/1995 → 01/2000		5,4	24	063524160780	**MSN2064**
26.293 FNLS,26.293 FVLS	D 2865 LF20, D 2865 LF24	213	04/1995 → 07/1996		5,4	24	063524160020	**MSN2060**
26.293 FNLS,26.293 FVLS	D 2865 LF20, D 2865 LF24	213	04/1995 → 01/2000		5,4	24	063524160780	**MSN2064**
26.314 DFC, DFLC		228	05/2001 → 06/2003		5,4	24	063524160780	**MSN2064**
26.314 DFK, DFLK	D 2866 LF23	228	05/2001 → 06/2003		5,4	24	063524160780	**MSN2064**
26.314 DFS, DFLS	D 2866 LF23	228	05/2001 → 06/2003		5,4	24	063524160780	**MSN2064**
26.314 DF-TM	D 2866 LF23	228	05/2001 → 06/2003		5,4	24	063524160780	**MSN2064**
26.314 FNLC, FNLLC, FNLLRC, FNLLW, FVLC	D 2866 LF23	228	05/2001 → 06/2003		5,4	24	063524160780	**MSN2064**
26.314 FNLS	D 2866 LF23	228	05/2001 → 06/2003		5,4	24	063524160780	**MSN2064**
26.314 FVL-KO	D 2866 LF23	228	05/2001 → 06/2003		5,4	24	063524160780	**MSN2064**
26.314 FVLS, FVLRS	D 2866 LF23	228	05/2001 → 06/2003		5,4	24	063524160780	**MSN2064**
26.323 DFC,26.323 DFLC	D 2865 LF23	235	01/1994 → 12/1995		5,4	24	063524160020	**MSN2060**
26.323 DFK,26.323 DFLK	D 2865 LF23	235	01/1994 → 12/1995		5,4	24	063524160020	**MSN2060**
26.323 DFS,26.323 DFLS	D 2865 LF23	235	01/1994 → 12/1995		5,4	24	063524160020	**MSN2060**
26.323 FNLC,26.323 FNLLC,26.323 FVLC	D 2865 LF23	235	01/1994 → 12/1995		5,4	24	063524160020	**MSN2060**
26.323 FNLS,26.323 FVLS	D 2865 LF23	235	01/1994 → 12/1995		5,4	24	063524160020	**MSN2060**
26.343 DFC,26.343 DFLC	D 2865 LF21	250	01/1994 → 07/1996		5,4	24	063524160020	**MSN2060**
26.343 DFC,26.343 DFLC	D 2865 LF21	250	01/1994 → 01/2000		5,4	24	063524160780	**MSN2064**
26.343 DFK,26.343 DFLK	D 2865 LF21	250	01/1994 → 07/1996		5,4	24	063524160020	**MSN2060**
26.343 DFK,26.343 DFLK	D 2865 LF21	250	01/1994 → 09/2001		5,4	24	063524160780	**MSN2064**
26.343 DFS,26.343 DFLS	D 2865 LF21	250	01/1994 → 07/1996		5,4	24	063524160020	**MSN2060**
26.343 DFS,26.343 DFLS	D 2865 LF21	250	01/1994 → 01/2000		5,4	24	063524160780	**MSN2064**
26.343 FNLC,26.343 FNLLC,26.343 FVLC	D 2865 LF21	250	01/1994 → 07/1996		5,4	24	063524160020	**MSN2060**
26.343 FNLC,26.343 FNLLC,26.343 FVLC	D 2865 LF21	250	01/1994 → 01/2000		5,4	24	063524160780	**MSN2064**
26.343 FNLS,26.343 FVLS	D 2865 LF21	250	01/1994 → 07/1996		5,4	24	063524160020	**MSN2060**
26.343 FNLS,26.343 FVLS	D 2865 LF21	250	01/1994 → 01/2000		5,4	24	063524160780	**MSN2064**
26.364 DFC, DFLC	D 2866 LF24	265	05/2001 → 06/2003		5,4	24	063524160780	**MSN2064**
26.364 DFK, DFLK	D 2866 LF24	265	05/2001 → 06/2003		5,4	24	063524160780	**MSN2064**

		kW ÷ kW		i	kW	V	LONG	SHORT
MAN								
F 2000								
26.364 DFS, DFLS	D 2866 LF24	265	05/2001 → 06/2003		5,4	24	063524160780	**MSN2064**
26.364 DF-TM	D 2866 LF24	265	05/2001 → 06/2003		5,4	24	063524160780	**MSN2064**
26.364 FNLC, FNLLC, FNLLRC, FNLLW, FVLC	D 2866 LF24	265	05/2001 → 06/2003		5,4	24	063524160780	**MSN2064**
26.364 FNLS	D 2866 LF24	265	05/2001 → 06/2003		5,4	24	063524160780	**MSN2064**
26.364 FVL-KO	D 2866 LF24	265	05/2001 → 06/2003		5,4	24	063524160780	**MSN2064**
26.364 FVLS, FVLRS	D 2866 LF24	265	05/2001 → 06/2003		5,4	24	063524160780	**MSN2064**
26.373 DFC,26.373 DFLC	D 2866 LF21	272	01/1994 → 12/1995		5,4	24	063524160780	**MSN2064**
26.373 DFK,26.373 DFLK	D 2866 LF21	272	01/1994 → 12/1995		5,4	24	063524160780	**MSN2064**
26.373 DFS,26.373 DFLS	D 2866 LF21	272	01/1994 → 12/1995		5,4	24	063524160780	**MSN2064**
26.373 FNLC,26.373 FNLLC,26.373 FVLC	D 2866 LF21	272	01/1994 → 12/1995		5,4	24	063524160780	**MSN2064**
26.373 FNLS,26.373 FVLS	D 2866 LF21	272	01/1994 → 12/1995		5,4	24	063524160780	**MSN2064**
26.403 DFC,26.403 DFLC	D 2866 LF20	294	01/1994 → 09/2001		5,4	24	063524160780	**MSN2064**
26.403 DFK,26.403 DFLK	D 2866 LF20	294	01/1994 → 09/2001		5,4	24	063524160780	**MSN2064**
26.403 DFS,26.403 DFLS	D 2866 LF20	294	01/1994 → 09/2001		5,4	24	063524160780	**MSN2064**
26.403 FNLC,26.403 FNLLC,26.403 FVLC	D 2866 LF20	294	01/1994 → 09/2001		5,4	24	063524160780	**MSN2064**
26.403 FNLS,26.403 FVLS	D 2866 LF20	294	01/1994 → 09/2001		5,4	24	063524160780	**MSN2064**
26.414 DFC, DFLC	D 2866 LF25	301	05/2001 → 09/2002		5,4	24	063524160780	**MSN2064**
26.414 DFK, DFLK	D 2866 LF25	301	05/2001 → 09/2002		5,4	24	063524160780	**MSN2064**
26.414 DFS, DFLS	D 2866 LF25	301	05/2001 → 09/2002		5,4	24	063524160780	**MSN2064**
26.414 DF-TM	D 2866 LF25	301	05/2001 → 09/2002		5,4	24	063524160780	**MSN2064**
26.414 FNLC, FNLLC, FNLLRC, FNLLW, FVLC	D 2866 LF25	301	05/2001 → 09/2002		5,4	24	063524160780	**MSN2064**
26.414 FNLS	D 2866 LF25	301	05/2001 → 09/2002		5,4	24	063524160780	**MSN2064**
26.414 FVL-KO	D 2866 LF25	301	05/2001 → 09/2002		5,4	24	063524160780	**MSN2064**
26.414 FVLS, FVLRS	D 2866 LF25	301	05/2001 → 09/2002		5,4	24	063524160780	**MSN2064**
26.423 DFC,26.423 DFLC	D 2866 LF22	309	01/1994 → 12/1995		5,4	24	063524160780	**MSN2064**
26.423 DFK,26.423 DFLK	D 2866 LF22	309	01/1994 → 12/1995		5,4	24	063524160780	**MSN2064**
26.423 DFS,26.423 DFLS	D 2866 LF22	309	01/1994 → 12/1995		5,4	24	063524160780	**MSN2064**
26.423 FNLC,26.423 FNLLC,26.423 FVLC	D 2866 LF22	309	01/1994 → 12/1995		5,4	24	063524160780	**MSN2064**
26.423 FNLS,26.423 FVLS	D 2866 LF22	309	01/1994 → 12/1995		5,4	24	063524160780	**MSN2064**
26.463 DFC, DFLC	D 2876 LF 02	338	01/1994 → 09/2001		5,4	24	063524160780	**MSN2064**
26.463 DFK,26.463 DFLK	D 2876 LF 02	338	01/1994 → 09/2001		5,4	24	063524160780	**MSN2064**
26.463 DFS,26.463 DFLS	D 2876 LF 02	338	01/1994 → 09/2001		5,4	24	063524160780	**MSN2064**
26.463 FNLC, FNLLC, FVLC	D 2876 LF 02	338	01/1994 → 09/2001		5,4	24	063524160780	**MSN2064**
26.463 FNLS,26.463 FVLS	D 2876 LF 02	338	01/1994 → 09/2001		5,4	24	063524160780	**MSN2064**

		kW ÷ kW			kW	V	LONG	SHORT
MAN								
F 2000								
26.464 DFC, DFLC	D 2876 LF 03	338	05/2001 → 09/2002		5,4	24	063524160780	**MSN2064**
26.464 DFK, DFLK	D 2876 LF 03	338	05/2001 → 09/2002		5,4	24	063524160780	**MSN2064**
26.464 DFS, DFLS	D 2876 LF 03	338	05/2001 → 09/2002		5,4	24	063524160780	**MSN2064**
26.464 DF-TM	D 2876 LF 03	338	05/2001 → 09/2002		5,4	24	063524160780	**MSN2064**
26.464 FNLS	D 2876 LF 03	338	05/2001 → 09/2002		5,4	24	063524160780	**MSN2064**
26.464 FVL-KO	D 2876 LF 03	338	05/2001 → 09/2002		5,4	24	063524160780	**MSN2064**
26.464 FVLS, FVLRS	D 2876 LF 03	338	05/2001 → 09/2002		5,4	24	063524160780	**MSN2064**
27.273 DFAC	D 2865 LF22	198	01/1994 → 12/1995		5,4	24	063524160020	**MSN2060**
27.273 DFAK	D 2865 LF22	198	01/1994 → 12/1995		5,4	24	063524160020	**MSN2060**
27.273 DFAS	D 2865 LF22	198	01/1994 → 12/1995		5,4	24	063524160020	**MSN2060**
27.273 DFC	D 2865 LF22	198	01/1994 → 12/1995		5,4	24	063524160020	**MSN2060**
27.273 DFK	D 2865 LF22	198	01/1994 → 12/1995		5,4	24	063524160020	**MSN2060**
27.273 DFS	D 2865 LF22	198	01/1994 → 12/1995		5,4	24	063524160020	**MSN2060**
27.293 DFAC	D 2865 LF20, D 2865 LF24	213	08/1996 → 01/2000		5,4	24	063524160780	**MSN2064**
27.293 DFAK	D 2865 LF20, D 2865 LF24	213	08/1996 → 01/2000		5,4	24	063524160780	**MSN2064**
27.293 DFAS	D 2865 LF20, D 2865 LF24	213	08/1996 → 01/2000		5,4	24	063524160780	**MSN2064**
27.293 DFC	D 2865 LF20, D 2865 LF24	213	04/1995 → 07/1996		5,4	24	063524160020	**MSN2060**
27.293 DFC	D 2865 LF20, D 2865 LF24	213	08/1996 → 01/2000		5,4	24	063524160780	**MSN2064**
27.293 DFK	D 2865 LF20, D 2865 LF24	213	04/1995 → 07/1996		5,4	24	063524160020	**MSN2060**
27.293 DFK	D 2865 LF20, D 2865 LF24	213	08/1996 → 01/2000		5,4	24	063524160780	**MSN2064**
27.293 DFS	D 2865 LF20, D 2865 LF24	213	04/1995 → 07/1996		5,4	24	063524160020	**MSN2060**
27.293 DFS	D 2865 LF20, D 2865 LF24	213	08/1996 → 01/2000		5,4	24	063524160780	**MSN2064**
27.314 DFAC	D 2866 LF23	228	05/2001 → 08/2002		5,4	24	063524160780	**MSN2064**
27.314 DFAK, DFA-KI		228	05/2001 → 08/2002		5,4	24	063524160780	**MSN2064**
27.314 DFAS		228	05/2001 → 08/2002		5,4	24	063524160780	**MSN2064**
27.314 DFC		228	05/2001 → 08/2002		5,4	24	063524160780	**MSN2064**
27.314 DFK, DF-KI		228	05/2001 → 08/2002		5,4	24	063524160780	**MSN2064**
27.314 DFS		228	05/2001 → 08/2002		5,4	24	063524160780	**MSN2064**
27.314 DF-TM		228	05/2001 → 08/2002		5,4	24	063524160780	**MSN2064**
27.314 FVL	D 2866 LF23	228	01/2000 → 08/2002		5,4	24	063524160780	**MSN2064**
27.323 DFAC	D 2865 LF23	235	01/1994 → 12/1995		5,4	24	063524160020	**MSN2060**
27.323 DFAK, DFA-KI	D 2865 LF23	235	01/1994 → 12/1995		5,4	24	063524160020	**MSN2060**
27.323 DFAS	D 2865 LF23	235	01/1994 → 12/1995		5,4	24	063524160020	**MSN2060**
27.323 DFC	D 2865 LF23	235	01/1994 → 12/1995		5,4	24	063524160020	**MSN2060**
27.323 DFK, DF-KI	D 2865 LF23	235	01/1994 → 12/1995		5,4	24	063524160020	**MSN2060**

		kW ÷ kW		i	kW	V	LONG	SHORT
MAN								
F 2000								
27.323 DFS	D 2865 LF23	235	01/1994 → 12/1995		5,4	24	063524160020	**MSN2060**
27.343 DFAC	D 2865 LF21	250	01/1994 → 07/1996		5,4	24	063524160020	**MSN2060**
27.343 DFAK	D 2865 LF21	250	01/1994 → 07/1996		5,4	24	063524160020	**MSN2060**
27.343 DFAK	D 2865 LF21	250	08/1996 → 01/2000		5,4	24	063524160780	**MSN2064**
27.343 DFAS	D 2865 LF21	250	01/1994 → 07/1996		5,4	24	063524160020	**MSN2060**
27.343 DFAS	D 2865 LF21	250	08/1996 → 01/2000		5,4	24	063524160780	**MSN2064**
27.343 DFC	D 2865 LF21	250	01/1994 → 07/1996		5,4	24	063524160020	**MSN2060**
27.343 DFC	D 2865 LF21	250	08/1996 → 01/2000		5,4	24	063524160780	**MSN2064**
27.343 DFK	D 2865 LF21	250	01/1994 → 07/1996		5,4	24	063524160020	**MSN2060**
27.343 DFK	D 2865 LF21	250	08/1996 → 01/2000		5,4	24	063524160780	**MSN2064**
27.343 DFS	D 2865 LF21	250	01/1994 → 07/1996		5,4	24	063524160020	**MSN2060**
27.343 DFS	D 2865 LF21	250	08/1996 → 01/2000		5,4	24	063524160780	**MSN2064**
27.364 DFAC	D 2866 LF24	265	05/2001 → 09/2002		5,4	24	063524160780	**MSN2064**
27.364 DFAK, DFA-KI		265	05/2001 → 09/2002		5,4	24	063524160780	**MSN2064**
27.364 DFAS		265	05/2001 → 09/2002		5,4	24	063524160780	**MSN2064**
27.364 DFC		265	05/2001 → 09/2002		5,4	24	063524160780	**MSN2064**
27.364 DFK, DF-KI		265	05/2001 → 09/2002		5,4	24	063524160780	**MSN2064**
27.364 DFS		265	05/2001 → 09/2002		5,4	24	063524160780	**MSN2064**
27.364 DF-TM		265	05/2001 → 09/2002		5,4	24	063524160780	**MSN2064**
27.364 FVL	D 2866 LF24	265	07/1999 → 09/2002		5,4	24	063524160780	**MSN2064**
27.373 DFAC	D 2866 LF21	272	01/1994 → 12/1995		5,4	24	063524160780	**MSN2064**
27.373 DFAK, DFA-KI	D 2866 LF21	272	01/1994 → 12/1995		5,4	24	063524160780	**MSN2064**
27.373 DFAS	D 2866 LF21	272	01/1994 → 12/1995		5,4	24	063524160780	**MSN2064**
27.373 DFC	D 2866 LF21	272	01/1994 → 12/1995		5,4	24	063524160780	**MSN2064**
27.373 DFK, DF-KI	D 2866 LF21	272	01/1994 → 12/1995		5,4	24	063524160780	**MSN2064**
27.373 DFS	D 2866 LF21	272	01/1994 → 12/1995		5,4	24	063524160780	**MSN2064**
27.403 DFAC	D 2866 LF20	294	01/1994 → 09/2001		5,4	24	063524160780	**MSN2064**
27.403 DFAK, DFA-KI	D 2866 LF20	294	01/1994 → 09/2001		5,4	24	063524160780	**MSN2064**
27.403 DFAS	D 2866 LF20	294	01/1994 → 09/2001		5,4	24	063524160780	**MSN2064**
27.403 DFC	D 2866 LF20	294	01/1994 → 09/2001		5,4	24	063524160780	**MSN2064**
27.403 DFK, DF-KI	D 2866 LF20	294	01/1994 → 09/2001		5,4	24	063524160780	**MSN2064**
27.403 DFS	D 2866 LF20	294	01/1994 → 09/2001		5,4	24	063524160780	**MSN2064**
27.414 DFAC	D 2866 LF25	301	05/2001 → 08/2002		5,4	24	063524160780	**MSN2064**
27.414 DFAK, DFA-KI		301	05/2001 → 08/2002		5,4	24	063524160780	**MSN2064**
27.414 DFAS		301	05/2001 → 08/2002		5,4	24	063524160780	**MSN2064**
27.414 DFC		301	05/2001 → 08/2002		5,4	24	063524160780	**MSN2064**
27.414 DFK, DF-KI		301	05/2001 → 08/2002		5,4	24	063524160780	**MSN2064**
27.414 DFS		301	05/2001 → 08/2002		5,4	24	063524160780	**MSN2064**
27.414 DF-TM		301	05/2001 → 08/2002		5,4	24	063524160780	**MSN2064**
27.414 FVL	D 2866 LF25	301	01/2000 → 08/2002		5,4	24	063524160780	**MSN2064**
27.423 DFAC	D 2866 LF22	309	01/1994 → 12/1995		5,4	24	063524160780	**MSN2064**
27.423 DFAK, DFA-KI	D 2866 LF22	309	01/1994 → 12/1995		5,4	24	063524160780	**MSN2064**
27.423 DFAS	D 2866 LF22	309	01/1994 → 12/1995		5,4	24	063524160780	**MSN2064**
27.423 DFC	D 2866 LF22	309	01/1994 → 12/1995		5,4	24	063524160780	**MSN2064**

		kW ÷ kW			kW	V	LONG	SHORT
MAN								
F 2000								
27.423 DFK, DF-KI	D 2866 LF22	309	01/1994 → 12/1995		5,4	24	063524160780	**MSN2064**
27.423 DFS	D 2866 LF22	309	01/1994 → 12/1995		5,4	24	063524160780	**MSN2064**
27.463 DFAC	D 2876 LF 02	338	01/1994 → 09/2001		5,4	24	063524160780	**MSN2064**
27.463 DFAK, DFA-KI	D 2876 LF 02	338	01/1994 → 09/2001		5,4	24	063524160780	**MSN2064**
27.463 DFAS	D 2876 LF 02	338	01/1994 → 09/2001		5,4	24	063524160780	**MSN2064**
27.463 DFC	D 2876 LF 02	338	01/1994 → 09/2001		5,4	24	063524160780	**MSN2064**
27.463 DFK, DF-KI	D 2876 LF 02	338	01/1994 → 09/2001		5,4	24	063524160780	**MSN2064**
27.463 DFS	D 2876 LF 02	338	01/1994 → 09/2001		5,4	24	063524160780	**MSN2064**
27.463 DF-TM		338	07/2000 → 08/2002		5,4	24	063524160780	**MSN2064**
27.464 DFAC	D 2876 LF 03	338	05/2001 → 08/2002		5,4	24	063524160780	**MSN2064**
27.464 DFAK, DFA-KI		338	05/2001 → 08/2002		5,4	24	063524160780	**MSN2064**
27.464 DFAS		338	05/2001 → 08/2002		5,4	24	063524160780	**MSN2064**
27.464 DFK, DF-KI		338	05/2001 → 08/2002		5,4	24	063524160780	**MSN2064**
27.464 DFS	D 2876 LF 06	338	01/1994 → 09/2001		5,4	24	063524160780	**MSN2064**
27.464 DF-TM		338	05/2001 → 08/2002		5,4	24	063524160780	**MSN2064**
27.464 FVL	D 2876 LF 03	338	01/2000 → 08/2002		5,4	24	063524160780	**MSN2064**
32.293 VFC	D 2865 LF24	213	08/1996 → 09/2001		5,4	24	063524160780	**MSN2064**
32.314 VF, VFC	D 2866 LF23	228	05/2001 → 12/2001		5,4	24	063524160780	**MSN2064**
32.314 VFK, VF-HK	D 2866 LF23	228	05/2001 → 12/2001		5,4	24	063524160780	**MSN2064**
32.314 VF-TM	D 2866 LF23	228	05/2001 → 12/2001		5,4	24	063524160780	**MSN2064**
32.343 VFC	D 2865 LF21	250	08/1995 → 07/1996		5,4	24	063524160020	**MSN2060**
32.343 VFC	D 2865 LF21	250	08/1996 → 09/2001		5,4	24	063524160780	**MSN2064**
32.343 VFK	D 2865 LF21	250	08/1995 → 07/1996		5,4	24	063524160020	**MSN2060**
32.343 VFK	D 2865 LF21	250	08/1996 → 09/2001		5,4	24	063524160780	**MSN2064**
32.364 VF, VFC	D 2866 LF24	265	05/2001 → 09/2001		5,4	24	063524160780	**MSN2064**
32.364 VFK, VF-HK	D 2866 LF24	265	05/2001 → 09/2001		5,4	24	063524160780	**MSN2064**
32.364 VF-TM	D 2866 LF24	265	05/2001 → 09/2002		5,4	24	063524160780	**MSN2064**
32.403 VFC	D 2866 LF20	294	08/1995 → 09/2001		5,4	24	063524160780	**MSN2064**
32.403 VFK	D 2866 LF20	294	08/1995 → 09/2001		5,4	24	063524160780	**MSN2064**
32.414 VF, VFC	D 2866 LF25	301	05/2001 → 12/2001		5,4	24	063524160780	**MSN2064**
32.414 VFK, VF-HK	D 2866 LF25	301	05/2001 → 12/2001		5,4	24	063524160780	**MSN2064**
32.414 VF-TM	D 2866 LF25	301	05/2001 → 12/2001		5,4	24	063524160780	**MSN2064**
32.463 VFC	D 2876 LF 02	338	08/1995 → 09/2001		5,4	24	063524160780	**MSN2064**
32.463 VFK	D 2876 LF 02	338	08/1995 → 09/2001		5,4	24	063524160780	**MSN2064**
32.464 VF, VFC	D 2876 LF 03	338	05/2001 → 12/2001		5,4	24	063524160780	**MSN2064**
32.464 VFK, VF-HK	D 2876 LF 03	338	05/2001 → 12/2001		5,4	24	063524160780	**MSN2064**
32.464 VF-TM	D 2876 LF 03	338	05/2001 → 12/2001		5,4	24	063524160780	**MSN2064**
33.323 DFAC	D 2865 LF23	235	01/1994 → 12/1995		5,4	24	063524160020	**MSN2060**
33.323 DFAK	D 2865 LF23	235	01/1994 → 12/1995		5,4	24	063524160020	**MSN2060**
33.323 DFAS	D 2865 LF23	235	01/1994 → 12/1995		5,4	24	063524160020	**MSN2060**
33.323 DFC	D 2865 LF23	235	01/1994 → 12/1995		5,4	24	063524160020	**MSN2060**
33.323 DFK	D 2865 LF23	235	01/1994 → 12/1995		5,4	24	063524160020	**MSN2060**
33.323 DFS	D 2865 LF23	235	01/1994 → 12/1995		5,4	24	063524160020	**MSN2060**
33.343 DFAC	D 2865 LF21	250	01/1994 →		5,4	24	063524160020	**MSN2060**

		kW ÷ kW		i	kW	V	LONG	SHORT
MAN								
F 2000								
33.343 DFAC	D 2865 LF21	250	08/1996 → 09/2001		5,4	24	063524160780	**MSN2064**
33.343 DFAK	D 2865 LF21	250	01/1994 → 07/1996		5,4	24	063524160020	**MSN2060**
33.343 DFAK	D 2865 LF21	250	08/1996 → 09/2001		5,4	24	063524160780	**MSN2064**
33.343 DFAS	D 2865 LF21	250	01/1994 → 07/1996		5,4	24	063524160020	**MSN2060**
33.343 DFAS	D 2865 LF21	250	08/1996 → 09/2001		5,4	24	063524160780	**MSN2064**
33.343 DFC	D 2865 LF21	250	01/1994 → 07/1996		5,4	24	063524160020	**MSN2060**
33.343 DFC	D 2865 LF21	250	08/1996 → 09/2001		5,4	24	063524160780	**MSN2064**
33.343 DFK	D 2865 LF21	250	01/1994 → 07/1996		5,4	24	063524160020	**MSN2060**
33.343 DFK	D 2865 LF21	250	08/1996 → 09/2001		5,4	24	063524160780	**MSN2064**
33.343 DFS	D 2865 LF21	250	01/1994 → 07/1996		5,4	24	063524160020	**MSN2060**
33.343 DFS	D 2865 LF21	250	08/1996 → 09/2001		5,4	24	063524160780	**MSN2064**
33.364 DFAC		265	05/2001 → 09/2001		5,4	24	063524160780	**MSN2064**
33.364 DFAK, DFA-KI		265	05/2001 → 09/2001		5,4	24	063524160780	**MSN2064**
33.364 DFAS		265	05/2001 → 09/2001		5,4	24	063524160780	**MSN2064**
33.364 DFC		265	05/2001 → 09/2001		5,4	24	063524160780	**MSN2064**
33.364 DFK, DF-KI		265	05/2001 → 09/2001		5,4	24	063524160780	**MSN2064**
33.364 DFS, DFRS		265	05/2001 → 09/2001		5,4	24	063524160780	**MSN2064**
33.373 DFAC	D 2866 LF21	272	01/1994 → 12/1995		5,4	24	063524160780	**MSN2064**
33.373 DFAK, DFA-KI	D 2866 LF21	272	01/1994 → 12/1995		5,4	24	063524160780	**MSN2064**
33.373 DFAS	D 2866 LF21	272	01/1994 → 12/1995		5,4	24	063524160780	**MSN2064**
33.373 DFC	D 2866 LF21	272	01/1994 → 12/1995		5,4	24	063524160780	**MSN2064**
33.373 DFK, DF-KI	D 2866 LF21	272	01/1994 → 12/1995		5,4	24	063524160780	**MSN2064**
33.373 DFS, DFRS	D 2866 LF21	272	01/1994 → 12/1995		5,4	24	063524160780	**MSN2064**
33.403 DFAC	D 2866 LF20	294	01/1994 → 09/2001		5,4	24	063524160780	**MSN2064**
33.403 DFAK, DFA-KI	D 2866 LF20	294	01/1994 → 09/2001		5,4	24	063524160780	**MSN2064**
33.403 DFAS	D 2866 LF20	294	01/1994 → 09/2001		5,4	24	063524160780	**MSN2064**
33.403 DFC	D 2866 LF20	294	01/1994 → 09/2001		5,4	24	063524160780	**MSN2064**
33.403 DFK, DF-KI	D 2866 LF20	294	01/1994 → 09/2001		5,4	24	063524160780	**MSN2064**
33.403 DFS, DFRS	D 2866 LF20	294	01/1994 → 09/2001		5,4	24	063524160780	**MSN2064**
33.414 DFAC		301	05/2001 → 08/2002		5,4	24	063524160780	**MSN2064**
33.414 DFAK, DFA-KI		301	05/2001 → 08/2002		5,4	24	063524160780	**MSN2064**
33.414 DFAS		301	05/2001 → 08/2002		5,4	24	063524160780	**MSN2064**
33.414 DFC		301	05/2001 → 08/2002		5,4	24	063524160780	**MSN2064**
33.414 DFK, DF-KI		301	05/2001 → 08/2002		5,4	24	063524160780	**MSN2064**
33.414 DFS, DFRS		301	05/2001 → 08/2002		5,4	24	063524160780	**MSN2064**
33.423 DFAC	D 2866 LF22	309	01/1994 → 12/1995		5,4	24	063524160780	**MSN2064**
33.423 DFAK, DFA-KI	D 2866 LF22	309	01/1994 → 12/1995		5,4	24	063524160780	**MSN2064**
33.423 DFAS	D 2866 LF22	309	01/1994 → 12/1995		5,4	24	063524160780	**MSN2064**
33.423 DFC	D 2866 LF22	309	01/1994 → 12/1995		5,4	24	063524160780	**MSN2064**
33.423 DFK, DF-KI	D 2866 LF22	309	01/1994 → 12/1995		5,4	24	063524160780	**MSN2064**
33.423 DFS, DFRS	D 2866 LF22	309	01/1994 → 12/1995		5,4	24	063524160780	**MSN2064**
33.463 DFAC	D 2876 LF 02	338	01/1994 → 09/2001		5,4	24	063524160780	**MSN2064**
33.463 DFAK, DFA-KI	D 2876 LF 02	338	01/1994 →		5,4	24	063524160780	**MSN2064**
33.463 DFAS	D 2876 LF 02	338	01/1994 →		5,4	24	063524160780	**MSN2064**

		kW ÷ kW		i	kW	V	LONG	SHORT
MAN								
F 2000								
33.463 DFC	D 2876 LF 02	338	01/1994 →		5,4	24	063524160780	**MSN2064**
33.463 DFK, DF-KI	D 2876 LF 02	338	01/1994 →		5,4	24	063524160780	**MSN2064**
33.463 DFS, DFRS	D 2876 LF 02	338	01/1994 →		5,4	24	063524160780	**MSN2064**
33.464 DFAC		338	05/2001 →		5,4	24	063524160780	**MSN2064**
33.464 DFAK, DFA-KI		338	05/2001 →		5,4	24	063524160780	**MSN2064**
33.464 DFAS		338	05/2001 →		5,4	24	063524160780	**MSN2064**
33.464 DFC		338	05/2001 →		5,4	24	063524160780	**MSN2064**
33.464 DFK, DF-KI		338	05/2001 →		5,4	24	063524160780	**MSN2064**
33.464 DFS, DFRS		338	05/2001 →		5,4	24	063524160780	**MSN2064**
35.314 VF-TM		228	03/2002 → 09/2003		5,4	24	063524160780	**MSN2064**
35.343 VFC	D 2865 LF21	250	08/1995 → 07/1996		5,4	24	063524160020	**MSN2060**
35.343 VFC	D 2865 LF21	250	08/1998 → 09/2001		5,4	24	063524160780	**MSN2064**
35.343 VFK	D 2865 LF21	250	08/1995 → 07/1996		5,4	24	063524160020	**MSN2060**
35.343 VFK	D 2865 LF21	250	08/1998 → 09/2001		5,4	24	063524160780	**MSN2064**
35.364 VF, VFC, VFRC	D 2866 LF24	265	05/2001 → 09/2001		5,4	24	063524160780	**MSN2064**
35.403 VF, VFC, VFRC	D 2866 LF20	294	08/1995 → 09/2001		5,4	24	063524160780	**MSN2064**
35.414 VF, VFC, VFRC	D 2866 LF25	301	09/2002 → 06/2003		5,4	24	063524160780	**MSN2064**
35.414 VFK, VF-HK, VF-KI	D 2866 LF25	301	09/2002 → 06/2003		5,4	24	063524160780	**MSN2064**
35.414 VF-TM	D 2866 LF25	301	09/2002 → 06/2003		5,4	24	063524160780	**MSN2064**
35.463 VF, VFC, VFRC	D 2876 LF 02	338	08/1995 → 09/2001		5,4	24	063524160780	**MSN2064**
35.463 VFK, VF-HK, VF-KI	D 2876 LF 02	338	08/1995 → 09/2001		5,4	24	063524160780	**MSN2064**
35.464 VF, VFC, VFRC	D 2876 LF 03	338	05/2001 → 08/2002		5,4	24	063524160780	**MSN2064**
35.464 VFK, VF-HK, VF-KI	D 2876 LF 03	338	03/2002 → 08/2002		5,4	24	063524160780	**MSN2064**
35.464 VF-TM	D 2876 LF 03	338	03/2002 → 08/2002		5,4	24	063524160780	**MSN2064**
40.403 DFAK	D 2866 LF20	294	08/1995 → 09/2001		5,4	24	063524160780	**MSN2064**
40.403 DFAS	D 2866 LF20	294	08/1995 → 09/2001		5,4	24	063524160780	**MSN2064**
40.403 DFK	D 2866 LF20	294	08/1995 → 09/2001		5,4	24	063524160780	**MSN2064**
40.403 DFS	D 2866 LF20	294	08/1995 → 09/2001		5,4	24	063524160780	**MSN2064**
40.414 DFAK		301	05/2001 → 08/2002		5,4	24	063524160780	**MSN2064**
40.414 DFK		301	05/2001 → 08/2002		5,4	24	063524160780	**MSN2064**
40.463 DFAK	D 2876 LF 02	338	08/1995 → 09/2001		5,4	24	063524160780	**MSN2064**
40.463 DFAS	D 2876 LF 02	338	08/1995 → 09/2001		5,4	24	063524160780	**MSN2064**
40.463 DFK	D 2876 LF 02	338	08/1995 → 09/2001		5,4	24	063524160780	**MSN2064**
40.463 DFS	D 2876 LF 02	338	08/1995 → 09/2001		5,4	24	063524160780	**MSN2064**
41.343 VFC	D 2865 LF21	250	08/1995 → 07/1996		5,4	24	063524160020	**MSN2060**
41.343 VFC	D 2865 LF21	250	08/1996 → 09/2001		5,4	24	063524160780	**MSN2064**
41.343 VFK	D 2865 LF21	250	08/1995 → 07/1996		5,4	24	063524160020	**MSN2060**
41.343 VFK	D 2865 LF21	250	08/1996 → 09/2001		5,4	24	063524160780	**MSN2064**
41.364 VF, VFC, VFRC		265	05/2001 → 08/2002		5,4	24	063524160780	**MSN2064**
41.364 VFK, VF-HK, VF-KI		265	03/2002 → 08/2002		5,4	24	063524160780	**MSN2064**

		kW ÷ kW		i	kW	V	LONG	SHORT
MAN								
F 2000								
41.403 VF, VFC, VFRC	D 2866 LF20	294	08/1995 → 09/2001		5,4	24	063524160780	**MSN2064**
41.403 VFK, VF-HK, VF-KI	D 2866 LF20	294	08/1995 → 09/2001		5,4	24	063524160780	**MSN2064**
41.414 VF, VFC, VFRC		301	05/2001 → 08/2002		5,4	24	063524160780	**MSN2064**
41.414 VFK, VF-HK, VF-KI		301	03/2002 → 08/2002		5,4	24	063524160780	**MSN2064**
41.463 VF, VFC, VFRC	D 2876 LF 02	338	08/1995 → 09/2001		5,4	24	063524160780	**MSN2064**
41.463 VFK, VF-HK, VF-KI	D 2876 LF 02	338	08/1995 → 09/2001		5,4	24	063524160780	**MSN2064**
41.464 VF, VFC, VFRC	D 2876 LF 06	338	07/1999 → 08/2002		5,4	24	063524160780	**MSN2064**
41.464 VFK, VF-HK, VF-KI		338	03/2002 → 08/2002		5,4	24	063524160780	**MSN2064**
F 9								
15.192 F, 15.192 FL	D 2565 MF	141	01/1983 → 12/1984		5,4	24	063524160020	**MSN2060**
15.192 FS	D 2565 MF	141	01/1983 → 12/1984		5,4	24	063524160020	**MSN2060**
F 90								
19.242 F,19.242 FL,19.242 FLL	D 2866 F/240	177	01/1988 → 01/1989		5,4	24	063524160780	**MSN2064**
19.242 FK	D 2866 F/240	177	01/1988 → 02/1989		5,4	24	063524160780	**MSN2064**
19.242 FS,19.242 FLS,19.242 FLLS	D 2866 F/240	177	01/1988 → 01/1989		5,4	24	063524160780	**MSN2064**
19.332 F,19.332 FL,19.332 FLL	D 2866 LF/330	243	07/1986 → 01/1990		5,4	24	063524160780	**MSN2064**
19.332 FA	D 2866 LF/330	243	05/1988 → 01/1990		5,4	24	063524160780	**MSN2064**
19.332 FAK	D 2866 LF/330	243	05/1988 → 01/1990		5,4	24	063524160780	**MSN2064**
19.332 FAS	D 2866 LF/330	243	05/1988 → 01/1990		5,4	24	063524160780	**MSN2064**
19.332 FK	D 2866 LF/330	243	07/1986 → 01/1990		5,4	24	063524160780	**MSN2064**
19.332 FS,19.332 FLS,19.332 FLLS	D 2866 LF/330	243	07/1986 → 01/1990		5,4	24	063524160780	**MSN2064**
19.362 F,19.362 FL,19.362 FLL	D 2866 KF, D 2866 LXF	265	07/1986 → 02/1990		5,4	24	063524160020	**MSN2060**
19.362 FA	D 2866 LXF	265	05/1988 → 02/1990		5,4	24	063524160020	**MSN2060**
19.362 FAK	D 2866 LXF	265	05/1988 → 02/1990		5,4	24	063524160020	**MSN2060**
19.362 FAS	D 2866 LXF	265	05/1988 → 02/1990		5,4	24	063524160020	**MSN2060**
19.362 FK	D 2866 KF, D 2866 LXF	265	07/1986 → 02/1990		5,4	24	063524160020	**MSN2060**
19.362 FS,19.362 FLS,19.362 FLLS	D 2866 KF, D 2866 LXF	265	07/1986 → 02/1990		5,4	24	063524160020	**MSN2060**
19.372 F,19.372 FL,19.372 FLL	D 2866 LXF	249	05/1990 → 04/1995		5,4	24	063524160780	**MSN2064**
19.372 FK	D 2866 LXF	249	05/1990 → 04/1995		5,4	24	063524160780	**MSN2064**

		kW ÷ kW		i	kW	V	LONG	SHORT
MAN								
F 90								
19.372 FS,19.372 FLS,19.372 FLLS	D 2866 LXF	249	05/1990 → 04/1995		5,4	24	063524160780	**MSN2064**
24.242 DF	D 2866 F/240	177	01/1988 → 07/1989		5,4	24	063524160780	**MSN2064**
24.242 DFK	D 2866 F/240	177	01/1988 → 07/1989		5,4	24	063524160780	**MSN2064**
24.242 DFS	D 2866 F/240	177	01/1988 → 07/1989		5,4	24	063524160780	**MSN2064**
24.242 FNL,24.242 FNLL,24.242 FVL	D 2866 F/240	177	01/1988 → 02/1990		5,4	24	063524160780	**MSN2064**
24.332 DF	D 2866 LF/330	243	04/1987 → 01/1990		5,4	24	063524160780	**MSN2064**
24.332 DFK	D 2866 LF/330	243	04/1987 → 01/1990		5,4	24	063524160780	**MSN2064**
24.332 DFS,24.332 DFLS	D 2866 LF/330	243	07/1989 → 01/1990		5,4	24	063524160780	**MSN2064**
24.332 FNL,24.332 FNLL,24.332 FVL	D 2866 LF/330	243	10/1986 → 01/1990		5,4	24	063524160780	**MSN2064**
24.332 FNLS,24.332 FVLS	D 2866 LF/330	243	10/1986 → 01/1990		5,4	24	063524160780	**MSN2064**
24.362 DF	D 2866 KF, D 2866 LXF	265	04/1987 → 02/1990		5,4	24	063524160020	**MSN2060**
24.362 DFK	D 2866 KF, D 2866 LXF	265	04/1987 → 02/1990		5,4	24	063524160020	**MSN2060**
24.362 DFS,24.362 DFLS	D 2866 KF, D 2866 LXF	265	04/1987 → 02/1990		5,4	24	063524160020	**MSN2060**
24.362 FNL,24.362 FNLL,24.362 FVL	D 2866 KF, D 2866 LXF	265	10/1986 → 02/1990		5,4	24	063524160020	**MSN2060**
24.362 FNLS,24.362 FVLS	D 2866 KF, D 2866 LXF	265	10/1986 → 02/1990		5,4	24	063524160020	**MSN2060**
24.372 DF	D 2866 LXF	249	05/1990 → 12/1990		5,4	24	063524160780	**MSN2064**
24.372 DFK	D 2866 LXF	249	05/1990 → 12/1990		5,4	24	063524160780	**MSN2064**
24.372 DFS	D 2866 LXF	249	05/1990 → 12/1990		5,4	24	063524160780	**MSN2064**
24.372 FVL	D 2866 LXF	249	05/1990 → 12/1990		5,4	24	063524160780	**MSN2064**
24.372 FVLS	D 2866 LXF	249	05/1990 → 12/1990		5,4	24	063524160780	**MSN2064**
25.372 DF	D 2866 LXF	249	09/1990 → 12/1992		5,4	24	063524160780	**MSN2064**
25.372 DFK	D 2866 LXF	249	09/1990 → 12/1992		5,4	24	063524160780	**MSN2064**
25.372 DFS	D 2866 LXF	249	09/1990 → 12/1992		5,4	24	063524160780	**MSN2064**
25.372 FVLS	D 2866 LXF	249	09/1990 → 10/1993		5,4	24	063524160780	**MSN2064**
26.242 DF	D 2866 F/240	177	01/1988 → 07/1989		5,4	24	063524160020	**MSN2060**
26.242 DFAK	D 2866 F/240	177	02/1989 → 07/1989		5,4	24	063524160020	**MSN2060**
26.242 DFK	D 2866 F/240	177	01/1988 → 07/1989		5,4	24	063524160020	**MSN2060**
26.242 DFS	D 2866 F/240	177	01/1988 → 07/1989		5,4	24	063524160020	**MSN2060**
26.322 DF	D 2865 LF03, D 2865 LF06	235	02/1990 → 06/1996		5,4	24	063524160020	**MSN2060**
26.322 DFA	D 2865 LF03, D 2865 LF06	235	02/1990 → 12/1992		5,4	24	063524160020	**MSN2060**

		kW ÷ kW		i	kW	V	LONG	SHORT
MAN								
F 90								
26.322 DFAK	D 2865 LF03, D 2865 LF06	235	02/1990 → 12/1992		5,4	24	063524160020	**MSN2060**
26.322 DFAS	D 2865 LF03, D 2865 LF06	235	02/1990 → 12/1992		5,4	24	063524160020	**MSN2060**
26.322 DFK	D 2865 LF03, D 2865 LF06	235	02/1992 → 06/1996		5,4	24	063524160020	**MSN2060**
26.322 DFS,26.322 DFLS	D 2865 LF03, D 2865 LF06	235	02/1990 → 06/1996		5,4	24	063524160020	**MSN2060**
26.322 FNL,26.322 FNLL	D 2865 LF03, D 2865 LF06	235	03/1991 → 05/1995		5,4	24	063524160020	**MSN2060**
26.322 FNLS,26.322 FVLS	D 2865 LF03, D 2865 LF06	235	09/1990 → 12/1995		5,4	24	063524160020	**MSN2060**
26.332 DF	D 2866 LF/330	243	09/1987 → 01/1990		5,4	24	063524160780	**MSN2064**
26.332 DFA	D 2866 LF/330	243	05/1988 → 01/1990		5,4	24	063524160780	**MSN2064**
26.332 DFAK	D 2866 LF/330	243	05/1988 → 01/1990		5,4	24	063524160780	**MSN2064**
26.332 DFAS	D 2866 LF/330	243	05/1988 → 01/1990		5,4	24	063524160780	**MSN2064**
26.332 DFK	D 2866 LF/330	243	09/1987 → 01/1990		5,4	24	063524160780	**MSN2064**
26.332 DFS	D 2866 LF/330	243	09/1987 → 01/1990		5,4	24	063524160780	**MSN2064**
26.362 DF,26.362 DFL	D 2866 KF, D 2866 LXF	265	09/1987 → 02/1990		5,4	24	063524160020	**MSN2060**
26.362 DFA	D 2866 LXF	265	05/1988 → 02/1990		5,4	24	063524160020	**MSN2060**
26.362 DFAK	D 2866 LXF	265	05/1988 → 02/1990		5,4	24	063524160020	**MSN2060**
26.362 DFAS	D 2866 LXF	265	05/1988 → 02/1990		5,4	24	063524160020	**MSN2060**
26.362 DFK	D 2866 KF, D 2866 LXF	265	09/1987 → 02/1990		5,4	24	063524160020	**MSN2060**
26.362 DFS	D 2866 KF, D 2866 LXF	265	09/1987 → 02/1990		5,4	24	063524160020	**MSN2060**
26.362 DFS	D 2866 KF, D 2866 LXF	265	05/1988 → 02/1990		5,4	24	063524160780	**MSN2064**
32.332 VF	D 2866 LF/330	243	03/1988 → 01/1990		5,4	24	063524160780	**MSN2064**
32.332 VFK	D 2866 LF/330	243	03/1988 → 01/1990		5,4	24	063524160780	**MSN2064**
32.362 VF	D 2866 LXF	265	03/1988 → 02/1990		5,4	24	063524160780	**MSN2064**
32.362 VFK	D 2866 LXF	265	03/1988 → 02/1990		5,4	24	063524160780	**MSN2064**
32.372 VF	D 2866 LXF	249	05/1990 → 04/1995		5,4	24	063524160780	**MSN2064**
32.372 VFK	D 2866 LXF	249	05/1990 → 04/1995		5,4	24	063524160780	**MSN2064**
33.242 DFAK	D 2866 F/240	177	01/1988 → 08/1988		5,4	24	063524160780	**MSN2064**
33.242 DFK	D 2866 F/240	177	01/1988 → 08/1988		5,4	24	063524160780	**MSN2064**
33.332 DF	D 2866 LF/330	243	09/1987 → 01/1990		5,4	24	063524160780	**MSN2064**
33.332 DFA	D 2866 LF/330	243	05/1988 → 01/1990		5,4	24	063524160780	**MSN2064**
33.332 DFAK	D 2866 LF/330	243	05/1988 → 01/1990		5,4	24	063524160780	**MSN2064**
33.332 DFAS	D 2866 LF/330	243	05/1988 → 01/1990		5,4	24	063524160780	**MSN2064**
33.332 DFK	D 2866 LF/330	243	09/1987 → 01/1990		5,4	24	063524160780	**MSN2064**

		kW ÷ kW		i	kW	V	LONG	SHORT
MAN								
F 90								
33.332 DFS	D 2866 LF/330	243	09/1987 → 01/1990		5,4	24	063524160780	**MSN2064**
33.362 DF	D 2866 KF, D 2866 LXF	265	09/1987 → 02/1990		5,4	24	063524160020	**MSN2060**
33.362 DFA	D 2866 LXF	265	05/1988 → 02/1990		5,4	24	063524160020	**MSN2060**
33.362 DFAK	D 2866 LXF	265	05/1988 → 02/1990		5,4	24	063524160020	**MSN2060**
33.362 DFAS	D 2866 LXF	265	05/1988 → 02/1990		5,4	24	063524160020	**MSN2060**
33.362 DFK	D 2866 KF, D 2866 LXF	265	09/1987 → 02/1990		5,4	24	063524160020	**MSN2060**
33.362 DFS	D 2866 KF, D 2866 LXF	265	09/1987 → 02/1990		5,4	24	063524160020	**MSN2060**
35.292 VF	D 2866 LFZ/290	213	10/1988 → 04/1995		5,4	24	063524160780	**MSN2064**
35.292 VFK	D 2866 LFZ/290	213	10/1988 → 04/1995		5,4	24	063524160780	**MSN2064**
35.332 VF	D 2866 LFZ/330	243	10/1988 → 04/1995		5,4	24	063524160780	**MSN2064**
35.332 VFK	D 2866 LFZ/330	243	10/1988 → 04/1995		5,4	24	063524160780	**MSN2064**
35.362 VF	D 2866 LXF	265	10/1988 → 02/1990		5,4	24	063524160780	**MSN2064**
35.362 VFK	D 2866 LXF	265	10/1988 → 02/1990		5,4	24	063524160780	**MSN2064**
35.372 VF	D 2866 LXF	249	02/1990 → 04/1995		5,4	24	063524160780	**MSN2064**
35.372 VFK	D 2866 LXF	249	02/1990 → 04/1995		5,4	24	063524160780	**MSN2064**
41.332 VF	D 2866 LF/330	243	10/1988 → 01/1990		5,4	24	063524160780	**MSN2064**
41.332 VFK	D 2866 LF/330	243	10/1988 → 01/1990		5,4	24	063524160780	**MSN2064**
41.362 VF	D 2866 LXF	265	10/1988 → 02/1990		5,4	24	063524160780	**MSN2064**
41.362 VFK	D 2866 LXF	265	10/1988 → 02/1990		5,4	24	063524160780	**MSN2064**
48.332 VF	D 2866 LF/330	243	07/1989 → 01/1990		5,4	24	063524160780	**MSN2064**
48.332 VFA	D 2866 LF/330	243	07/1989 → 01/1990		5,4	24	063524160780	**MSN2064**
48.332 VFAK	D 2866 LF/330	243	07/1989 → 01/1990		5,4	24	063524160780	**MSN2064**
48.362 VF	D 2866 LXF	265	07/1989 → 02/1990		5,4	24	063524160780	**MSN2064**
48.362 VFA	D 2866 LXF	265	07/1989 → 02/1990		5,4	24	063524160780	**MSN2064**
48.362 VFAK	D 2866 LXF	265	07/1989 → 02/1990		5,4	24	063524160780	**MSN2064**
F 90 Unterflur								
19.362 U,19.362 ULL	D 2866 KUL	265	07/1986 → 01/1991		5,4	24	063524160020	**MSN2060**
24.362 UNL,24.362 UNLL	D 2866 KUL	265	10/1986 → 02/1990		5,4	24	063524160020	**MSN2060**
26.322 UNL,26.322 UNLL	D 2865 LF03, D 2865 LF06	235	09/1990 → 05/1994		5,4	24	063524160020	**MSN2060**
G								
6.90 F	D 0224 MF	66 66	10/1979 → 09/1987		4,0	24	063522310290	**MSN2048**
6.90 FK	D 0224 MF	66	10/1979 → 09/1987		4,0	24	063522310290	**MSN2048**
8.90 F	D 0224 MF	66	10/1979 → 09/1987		4,0	24	063522310290	**MSN2048**
8.90 FK	D 0224 MF	66	10/1979 → 09/1987		4,0	24	063522310290	**MSN2048**
G 90								
10.150 F,10.150 FL	D 0826 GF01, D 0826 GF03	110 114	09/1987 → 10/1993		4,0	24	063522310290	**MSN2048**
10.150 FK	D 0826 GF01, D 0826 GF03	110 114	05/1988 → 10/1993		4,0	24	063522310290	**MSN2048**

		kW ÷ kW		i	kW	V	LONG	SHORT
MAN								
G 90								
8.150 F,8.150 FL	D 0826 GF, D 0826 GF03	110 114	09/1987 → 10/1993		4,0	24	063522310290	**MSN2048**
8.150 FAE	D 0826 GF, D 0826 GF03	110 114	05/1988 → 05/1995		4,0	24	063522310290	**MSN2048**
8.150 FAKO	D 0826 GF03	110	10/1992 → 05/1995		4,0	24	063522310290	**MSN2048**
8.150 FK	D 0826 GF, D 0826 GF03	110 114	09/1987 → 10/1993		4,0	24	063522310290	**MSN2048**
8.150 FOC	D 0826 GF01, D 0826 GF03	110 114	07/1988 → 10/1993		4,0	24	063522310290	**MSN2048**
8.150 FS,8.150 FLS	D 0826 GF, D 0826 GF03	110 114	09/1987 → 10/1993		4,0	24	063522310290	**MSN2048**
9.150 F,9.150 FL	D 0826 GF, D 0826 GF03	110 114	05/1988 → 10/1993		4,0	24	063522310290	**MSN2048**
9.150 FAE	D 0826 GF, D 0826 GF03	110 114	05/1988 → 05/1992		4,0	24	063522310290	**MSN2048**
9.150 FAKO	D 0826 GF03	110	10/1992 → 05/1995		4,0	24	063522310290	**MSN2048**
9.150 FK	D 0826 GF, D 0826 GF03	110 114	05/1988 → 10/1993		4,0	24	063522310290	**MSN2048**
9.150 FOC	D 0826 GF01, D 0826 GF03	110 114	07/1988 → 10/1993		4,0	24	063522310290	**MSN2048**
9.150 FS,9.150 FLS	D 0826 GF, D 0826 GF03	110 114	09/1987 → 10/1993		4,0	24	063522310290	**MSN2048**
L 2000								
10.145 LC,10.145 LLC, LRC, LLRC (LE140C)	D 0834 LFL 02	103	07/2001 → 06/2002		4,0	24	063522310290	**MSN2048**
10.145 LK, LRK, L-KI, LR-KI (LE140C)	D 0834 LFL 02	103	07/2001 → 06/2002		4,0	24	063522310290	**MSN2048**
10.145 LLS, LLRS (LE140C)	D 0834 LFL 02	103	07/2001 → 06/2002		4,0	24	063522310290	**MSN2048**
10.150 FOC	D 0824 LFO	114 118	02/1995 → 01/1996		4,0	24	063522310290	**MSN2048**
10.153 LAEK	D 0824 LFL 01, D 0824 LFL 05	114	01/1995 → 06/1996		4,0	24	063522310290	**MSN2048**
10.153 LC,10.153 LLC	D 0824 LFL 01, D 0824 LFL 05	114	10/1993 → 06/1996		4,0	24	063522310290	**MSN2048**
10.153 LK	D 0824 LFL 01, D 0824 LFL 05	114	10/1993 → 06/1996		4,0	24	063522310290	**MSN2048**
10.153 LLS	D 0824 LFL 01, D 0824 LFL 05	114	10/1993 → 06/1996		4,0	24	063522310290	**MSN2048**
10.163 LAC, LAEC, LARC, LAERC	D 0824 LFL 02, D 0824 LFL 06, D 0824 LFL 09	114 118	01/1995 → 09/2006		4,0	24	063522310290	**MSN2048**

		kW ÷ kW		i	kW	V	LONG	SHORT
MAN								
L 2000								
10.163 LAK, LAEK, LARK, LAERK	D 0824 LFL 02, D 0824 LFL 06, D 0824 LFL 09	114 118	01/1995 → 09/2006		4,0	24	063522310290	**MSN2048**
10.163 LC,10.163 LLC	D 0824 LFL 02, D 0824 LFL 06, D 0824 LFL 09	114 118	05/1994 → 07/2001		4,0	24	063522310290	**MSN2048**
10.163 LC,10.163 LLC, LRC, LLRC (LE160C)	D 0824 LFL 09	114	09/2000 → 02/2005		4,0	24	063522310290	**MSN2048**
10.163 LK, LRK, L-KI, LR-KI	D 0824 LFL 02, D 0824 LFL 06, D 0824 LFL 09	114 118	05/1994 → 07/2001		4,0	24	063522310290	**MSN2048**
10.163 LLS, LLRS	D 0824 LFL 02, D 0824 LFL 06, D 0824 LFL 09	114 118	05/1994 → 01/2001		4,0	24	063522310290	**MSN2048**
10.185 LAC, LAEC, LARC, LAERC, LA-LA, LAE-LF (LE180C)	D 0834 LFL 03	132	07/2001 → 08/2002		4,0	24	063522310290	**MSN2048**
10.185 LAK, LAEK, LARK, LAERK (LE180C)	D 0834 LFL 03	132	07/2001 → 08/2002		4,0	24	063522310290	**MSN2048**
10.185 LC,10.185 LLC, LRC, LLRC (LE180C)	D 0834 LFL 03	132	09/2000 → 08/2002		4,0	24	063522310290	**MSN2048**
10.185 LK, LRK, L-KI, LR-KI (LE180C)	D 0834 LFL 03	132	09/2000 → 08/2002		4,0	24	063522310290	**MSN2048**
10.185 LLS, LLRS (LE180C)	D 0834 LFL 03	132	09/2000 → 08/2002		4,0	24	063522310290	**MSN2048**
10.220 FOC,10.220 FOCL	D 0826 LFL03	162	02/1995 → 09/2001		4,0	24	063522310290	**MSN2048**
10.223 LAEC	D 0826 LFL06	162	01/1995 → 06/1996		4,0	24	063522310290	**MSN2048**
10.223 LC,10.223 LLC	D 0826 LFL02, D 0826 LFL06	162 169	05/1994 → 06/1996		4,0	24	063522310290	**MSN2048**
10.223 LK	D 0826 LFL02, D 0826 LFL06	162 169	05/1994 → 06/1996		4,0	24	063522310290	**MSN2048**
10.223 LLS	D 0826 LFL02, D 0826 LFL06	162 169	05/1994 → 06/1996		4,0	24	063522310290	**MSN2048**
10.224 LAC, LAEC, LARC, LAERC	D 0826 LFL03, D 0826 LFL10	162	01/1995 → 09/2001		4,0	24	063522310290	**MSN2048**
10.224 LAK, LAEK, LARK, LAERK	D 0826 LFL03	162	01/1995 → 09/2001		4,0	24	063522310290	**MSN2048**
10.224 LC,10.224 LLC, LRC, LLRC	D 0826 LFL03, D 0826 LFL10	162	05/1994 → 09/2001		4,0	24	063522310290	**MSN2048**
10.224 LK, LRK, L-KI, LR-KI	D 0826 LFL03	162	05/1994 → 09/2001		4,0	24	063522310290	**MSN2048**
10.224 LLS, LLRS	D 0826 LFL03	162	05/1994 → 09/2001		4,0	24	063522310290	**MSN2048**

		kW ÷ kW			kW	V	LONG	SHORT
MAN								
L 2000								
10.225 LAC, LAEC, LARC, LAERC, LA-LF, LAE-LF (LE220C)	D 0836 LFL 02	162	09/2000 → 08/2002		4,0	24	063522310290	**MSN2048**
10.225 LAK, LAEK, LARK, LAERK (LE220C)	D 0836 LFL 02	162	07/2001 → 08/2002		4,0	24	063522310290	**MSN2048**
10.225 LC, 10.225 LLC, LRC, LLRC	D 0836 LFL 02	162	07/2001 → 12/2006		4,0	24	063522310290	**MSN2048**
10.225 LC, 10.225 LLC, LRC, LLRC (LE220C)	D 0836 LFL 02	162	07/2001 → 08/2002		4,0	24	063522310290	**MSN2048**
10.225 LK, LRK , L-KI, LR-KI(LE220C)	D 0836 LFL 02	162	07/2001 → 08/2002		4,0	24	063522310290	**MSN2048**
10.225 LLS, LLRS (LE220C)	D 0836 LFL 02	162	07/2001 → 08/2002		4,0	24	063522310290	**MSN2048**
12.185 LC, LLC	D 0834 LFL 03	132	07/2001 → 12/2005		4,0	24	063522310290	**MSN2048**
12.225 LC, LLC (LE220C)	D 0836 LFL 02	162	07/2001 → 06/2006		4,0	24	063522310290	**MSN2048**
8.103 LC, 8.103 LLC	D 0824 FL 01	75	10/1993 → 06/1996		4,0	24	063522310290	**MSN2048**
8.103 LK	D 0824 FL 01	75	10/1993 → 06/1996		4,0	24	063522310290	**MSN2048**
8.113 LC, 8.113 LLC	D 0824 LFL 04	81	08/1995 → 09/2001		4,0	24	063522310290	**MSN2048**
8.113 LK, LRK, L-KI, LR-KI	D 0824 LFL 04	81	08/1995 → 09/2001		4,0	24	063522310290	**MSN2048**
8.145 LC,8.145 LLC, L-LF (LE140C)	D 0834 LFL 02	103	07/2001 → 08/2002		4,0	24	063522310290	**MSN2048**
8.145 LLS, LLRS (LE140C)	D 0834 LFL 02	103	09/2002 → 08/2004		4,0	24	063522310290	**MSN2048**
8.150 FOC,8.150 FOCL	D 0824 LFO	114 118	02/1995 → 07/1998		4,0	24	063522310290	**MSN2048**
8.153 LAEC	D 0824 LFL 01, D 0824 LFL 05	114	01/1995 → 06/1996		4,0	24	063522310290	**MSN2048**
8.153 LAEK	D 0824 LFL 01, D 0824 LFL 05	114	01/1995 → 06/1996		4,0	24	063522310290	**MSN2048**
8.153 LC,8.153 LLC	D 0824 LFL 01, D 0824 LFL 05	114	10/1993 → 07/1997		4,0	24	063522310290	**MSN2048**
8.153 LK	D 0824 LFL 01, D 0824 LFL 05	114	10/1993 → 07/1997		4,0	24	063522310290	**MSN2048**
8.153 LLS	D 0824 LFL 01, D 0824 LFL 05	114	01/1995 → 06/1996		4,0	24	063522310290	**MSN2048**
8.163 LAC, LAEC, LARC, LAERC, LA-LF, LAE-LF	D 0824 LFL 02, D 0824 LFL 06, D 0824 LFL 09	114 118	01/1995 → 02/2002		4,0	24	063522310290	**MSN2048**
8.163 LAEC	D 0824 LFL 07	104	08/1995 → 03/1997		4,0	24	063522310290	**MSN2048**
8.163 LC,8.163 LLC	D 0824 LFL 09	114	09/2000 → 09/2001		4,0	24	063522310290	**MSN2048**
8.163 LC,8.163 LLC	D 0824 LFL 02, D 0824 LFL 06, D 0824 LFL 09	114 118	05/1994 → 09/2001		4,0	24	063522310290	**MSN2048**

		kW ÷ kW		i	kW	V	LONG	SHORT
MAN								
L 2000								
8.163 LC,8.163 LLC, LRC, LLRC, L-LF	D 0824 LFL 07	104	08/1995 → 03/2001		4,0	24	063522310290	**MSN2048**
8.163 LK, LRK, L-KI, LR-KI	D 0824 LFL 02, D 0824 LFL 06, D 0824 LFL 09	114 118	08/1995 → 09/2001		4,0	24	063522310290	**MSN2048**
8.163 LLS, LLRS	D 0824 LFL 02, D 0824 LFL 06, D 0824 LFL 09	114 118	05/1994 →		4,0	24	063522310290	**MSN2048**
8.185 LAC, LAEC, LARC, LAERC, LA-LF, LAE-LF (LE180C)	D 0834 LFL 03	132	07/2001 → 08/2002		4,0	24	063522310290	**MSN2048**
8.185 LAK, LAEK, LARK, LAERK (LE180C)	D 0834 LFL 03	132	09/2000 → 08/2002		4,0	24	063522310290	**MSN2048**
8.185 LC,8.185 LLC, LRC, LLRC, L-LF (LE180C)	D 0834 LFL 03	132	09/2000 → 08/2002		4,0	24	063522310290	**MSN2048**
8.185 LK, LRK, L-KI, LR-KI (LE180C)	D 0834 LFL 03	132	09/2002 → 12/2005		4,0	24	063522310290	**MSN2048**
8.185 LLS, LLRS (LE180C)	D 0834 LFL 03	132	07/2001 → 08/2002		4,0	24	063522310290	**MSN2048**
8.220 FOC,8.220 FOCL	D 0826 LFL03	162	04/1995 → 09/2001		4,0	24	063522310290	**MSN2048**
8.223 LAEC	D 0826 LFL06	162	01/1995 → 06/1996		4,0	24	063522310290	**MSN2048**
8.223 LC,8.223 LLC	D 0826 LFL02, D 0826 LFL06	162 169	05/1994 → 06/1996		4,0	24	063522310290	**MSN2048**
8.223 LK	D 0826 LFL02, D 0826 LFL06	162 169	05/1994 → 01/1995		4,0	24	063522310290	**MSN2048**
8.223 LLS	D 0826 LFL02, D 0826 LFL06	162 169	05/1994 → 01/1995		4,0	24	063522310290	**MSN2048**
8.224 LAC, LAEC, LARC, LAERC	D 0826 LFL03	162	01/1995 → 08/2001		4,0	24	063522310290	**MSN2048**
8.224 LAK, LAEK, LARK, LAERK	D 0826 LFL03	162	01/1995 → 08/2001		4,0	24	063522310290	**MSN2048**
8.224 LC,8.224 LLC, LRC, LLRC	D 0826 LFL03	162	05/1994 → 01/1995		4,0	24	063522310290	**MSN2048**
8.224 LK, LRK, L-KI, LR-KI	D 0826 LFL03	162	01/1995 → 09/2001		4,0	24	063522310290	**MSN2048**
8.224 LLS, LLRS	D 0826 LFL03	162	01/1995 → 03/2001		4,0	24	063522310290	**MSN2048**
8.225 LAC, LAEC, LARC, LAERC (LE220C)	D 0836 LFL 02	162	07/2001 → 08/2002		4,0	24	063522310290	**MSN2048**
8.225 LAK, LAEK, LARK, LAERK (LE220C)	D 0836 LFL 02	162	07/2001 → 08/2002		4,0	24	063522310290	**MSN2048**
8.225 LC,8.225 LLC, LRC, LLRC (LE220C)	D 0826 LFL10, D 0836 LFL 02	162	07/2001 → 08/2002		4,0	24	063522310290	**MSN2048**

		kW ÷ kW		i	kW	V	LONG	SHORT
MAN								
L 2000								
8.225 LK, LRK, L-KI, LR-KI (LE220C)	D 0836 LFL 02	162	07/2001 → 08/2002		4,0	24	063522310290	**MSN2048**
8.225 LLS, LLRS (LE220C)	D 0836 LFL 02	162	07/2001 → 08/2002		4,0	24	063522310290	**MSN2048**
9.145 LC,9.145 LLC, LRC, LLRC (LE140C)	D 0834 LFL 02	103	07/2001 → 08/2002		4,0	24	063522310290	**MSN2048**
9.145 LK, LRK, L-KI, LR-KI (LE140C)	D 0834 LFL 02	103	07/2001 → 08/2002		4,0	24	063522310290	**MSN2048**
9.145 LLS, LLRS (LE140C)	D 0834 LFL 02	103	07/2001 → 08/2002		4,0	24	063522310290	**MSN2048**
9.153 LC,9.153 LLC	D 0824 LFL 01, D 0824 LFL 05	114	10/1993 → 06/1996		4,0	24	063522310290	**MSN2048**
9.153 LK	D 0824 LFL 01, D 0824 LFL 05	114	08/1995 → 06/1996		4,0	24	063522310290	**MSN2048**
9.153 LLS	D 0824 LFL 01, D 0824 LFL 05	114	01/1995 → 12/1995		4,0	24	063522310290	**MSN2048**
9.163 LC	D 0824 LFL 07	104	08/1995 → 03/1997		4,0	24	063522310290	**MSN2048**
9.163 LC,9.163 LLC, LRC, LLRC	D 0824 LFL 02, D 0824 LFL 06, D 0824 LFL 09	114 118	05/1994 → 09/2001		4,0	24	063522310290	**MSN2048**
9.163 LK	D 0824 LFL 07	104	08/1995 → 03/1997		4,0	24	063522310290	**MSN2048**
9.163 LK, LRK, L-KI, LR-KI	D 0824 LFL 02, D 0824 LFL 06, D 0824 LFL 09	114 118	05/1994 →		4,0	24	063522310290	**MSN2048**
9.163 LLS, LLRS	D 0824 LFL 02, D 0824 LFL 06, D 0824 LFL 09	114 118	05/1994 → 03/2001		4,0	24	063522310290	**MSN2048**
9.185 LC,9.185 LLC, LRC, LLRC (LE180C)	D 0834 LFL 03	132	09/2000 → 06/2005		4,0	24	063522310290	**MSN2048**
9.185 LK, LRK, L-KI, LR-KI (LE180C)	D 0834 LFL 03	132	07/2001 → 06/2005		4,0	24	063522310290	**MSN2048**
9.185 LLS, LLRS (LE 180C)	D 0834 LFL 03	132	07/2001 → 06/2005		4,0	24	063522310290	**MSN2048**
9.223 LC,9.223 LLC	D 0826 LFL02, D 0826 LFL06	162 169	05/1994 → 06/1996		4,0	24	063522310290	**MSN2048**
9.223 LK	D 0826 LFL02, D 0826 LFL06	162 169	05/1994 → 06/1996		4,0	24	063522310290	**MSN2048**
9.223 LLS	D 0826 LFL02, D 0826 LFL06	162 169	05/1994 → 06/1996		4,0	24	063522310290	**MSN2048**
9.224 LC,9.224 LLC, LRC, LLRC	D 0826 LFL03	162	05/1994 → 09/2001		4,0	24	063522310290	**MSN2048**
9.224 LK, LRK, L-KI, LR-KI	D 0826 LFL03	162	05/1994 → 09/2001		4,0	24	063522310290	**MSN2048**

		kW ÷ kW		i	kW	V	LONG	SHORT
MAN								
L 2000								
9.224 LLS, LLRS	D 0826 LFL03	162	05/1994 → 03/2001		4,0	24	063522310290	**MSN2048**
9.225 LC,9.225 LLC, LRC, LLRC (LE220C)	D 0836 LFL 02	162	07/2001 → 06/2005		4,0	24	063522310290	**MSN2048**
9.225 LK, LRK, L-KI, LR-KI (LE220C)	D 0836 LFL 02	162	07/2001 → 06/2005		4,0	24	063522310290	**MSN2048**
9.225 LLS, LLRS (LE220C)	D 0836 LFL 02	162	07/2001 → 06/2005		4,0	24	063522310290	**MSN2048**
LION S COACH								
FRH 352,RH 353	D 2866 LOH 26	257	09/1995 → 10/1996		5,4	24	063524160020	**MSN2060**
FRH 352,RH 353	D 2866 LOH 26	257	11/1996 → 09/2001		5,4	24	063524160780	**MSN2064**
FRH 402,RH 403	D 2866 LOH 23	294	09/1995 → 10/1996		5,4	24	063524160020	**MSN2060**
FRH 402,RH 403	D 2866 LOH 23	294	11/1996 → 09/2001		5,4	24	063524160780	**MSN2064**
RH 402	D 2866 LOH 23	294	09/1998 → 09/2001		5,4	24	063524160780	**MSN2064**
RH 463	D 2876 LOH 01, D 2876 LOH 02, D 2876 LOH 03	338	01/2000 → 09/2006		5,4	24	063524160780	**MSN2064**
RHC 414	D 2866 LOH 34	301	09/2002 → 09/2006		5,4	24	063524160780	**MSN2064**
LION S COMFORT								
RN 313	D 2866 LUH 20, D 2866 LUH26	228	01/1998 → 12/2001		5,4	24	063524160780	**MSN2064**
RN 353	D 2866 LUH 21	257	01/1998 → 12/2001		5,4	24	063524160780	**MSN2064**
LION S STAR								
FRH 352,RH 353	D 2866 LOH 26	257	07/1998 → 09/2001		5,4	24	063524160780	**MSN2064**
FRH 402,RH 403	D 2866 LOH 23	294	09/1995 → 10/1996		5,4	24	063524160020	**MSN2060**
FRH 402,RH 403	D 2866 LOH 23	294	11/1996 → 01/2004		5,4	24	063524160780	**MSN2064**
FRH 422	D 2866 LOH 20	309	01/1993 → 09/1996		5,4	24	063524160780	**MSN2064**
RH 414	D 2876 LOH 03	338	10/2001 → 09/2006		5,4	24	063524160780	**MSN2064**
RH 464, RHS 464	D 2866 LOH 34	301	01/2002 → 09/2006		5,4	24	063524160780	**MSN2064**
RH 464, RHS 464	D 2876 LOH 03	338	01/2002 → 09/2006		5,4	24	063524160780	**MSN2064**
RH 464, RHS 464	D 2866 LOH 34	301	10/2001 → 09/2006		5,4	24	063524160780	**MSN2064**
M 2000 L								
12.163 LC, LLC, LRC, LLRC	D 0824 LFL 06, D 0824 LFL 09	114	08/1995 → 08/2001		4,0	24	063522310290	**MSN2048**
12.163 LK, LRK	D 0824 LFL 06, D 0824 LFL 09	114	08/1995 → 08/2001		4,0	24	063522310290	**MSN2048**
12.224 LC, LLC, LRC, LLRC	D 0826 LFL03, D 0826 LFL10	162	08/1995 → 09/2001		4,0	24	063522310290	**MSN2048**
12.224, 12.225, LK, LRK	D 0826 LFL03, D 0826 LFL10	162	08/1995 → 08/2001		4,0	24	063522310290	**MSN2048**
12.225 LC, LLC, LLLC, LRC, LLRC	D 0836 LFL 02	162	07/2001 → 06/2006		4,0	24	063522310290	**MSN2048**

		kW ÷ kW		i	kW	V	LONG	SHORT
MAN								
M 2000 L								
12.255 LC, LLC, LLLC		180	09/2002 → 06/2006		4,0	24	063522310290	**MSN2048**
12.255 LK		180	10/2003 → 06/2006		4,0	24	063522310290	**MSN2048**
12.285 LC, LLC, LLLC		206	09/2002 → 06/2006		4,0	24	063522310290	**MSN2048**
12.285 LK		206	10/2003 → 06/2006		4,0	24	063522310290	**MSN2048**
14.163 LC, LLC, LRC, LLRC	D 0824 LFL 06, D 0824 LFL 09	114	08/1995 → 08/2001		4,0	24	063522310290	**MSN2048**
14.163 LK, LRK	D 0824 LFL 06, D 0824 LFL 09	114	08/1995 → 08/2001		4,0	24	063522310290	**MSN2048**
14.224 LAC, LARC	D 0826 LFL03, D 0826 LFL10	162	08/1995 → 09/2001		4,0	24	063522310290	**MSN2048**
14.224 LAK, LARK	D 0826 LFL03, D 0826 LFL10	162	08/1995 → 09/2001		4,0	24	063522310290	**MSN2048**
14.224 LC, LLC, LLLC, LRC, LLRC, LLLRC	D 0826 LFL03, D 0826 LFL10	162	08/1995 → 09/2001		4,0	24	063522310290	**MSN2048**
14.224 LK, LRK	D 0826 LFL03, D 0826 LFL10	162	08/1995 → 09/2001		4,0	24	063522310290	**MSN2048**
14.224, 14.225, LA-LF		162	07/2003 → 09/2006		4,0	24	063522310290	**MSN2048**
14.225 LAC, LARC, (LE220B)	D 0836 LFL 02	162	07/2001 → 08/2002		4,0	24	063522310290	**MSN2048**
14.225 LAK, LARK, (LE220B)	D 0836 LFL 02	162	09/2002 → 09/2006		4,0	24	063522310290	**MSN2048**
14.225 LC, LLC, LLLC, LRC, LLRC, LLLRC, (LE220B)	D 0836 LFL 02	162	09/2000 → 08/2002		4,0	24	063522310290	**MSN2048**
14.225 LK, LRK (LE220B)	D 0836 LFL 02	162	09/2002 → 06/2006		4,0	24	063522310290	**MSN2048**
14.255 LAC, LARC		180	11/2002 → 09/2006		4,0	24	063522310290	**MSN2048**
14.255 LAK, LARK		180	11/2002 → 09/2006		4,0	24	063522310290	**MSN2048**
14.255 LA-LF		180	07/2003 → 09/2006		4,0	24	063522310290	**MSN2048**
14.255 LC, LLC, LLLC, LRC, LLRC, LLLRC, (LE250B)	D 0836 LFL 05	180	07/2001 → 09/2006		4,0	24	063522310290	**MSN2048**
14.255 LK, LRK		180	11/2002 → 09/2006		4,0	24	063522310290	**MSN2048**
14.263, 14.264 LAC, LARC	D 0826 LFL09	191	08/1995 → 09/2001		4,0	24	063522310290	**MSN2048**
14.263, 14.264 LAK, LARK	D 0826 LFL09	191	08/1995 → 09/2001		4,0	24	063522310290	**MSN2048**
14.263, 14.264 LC, LLC, LLLC, LRC, LLRC, LLLRC	D 0826 LFL09	191	08/1995 → 09/2001		4,0	24	063522310290	**MSN2048**
14.263, 14.264 LK, LRK	D 0826 LFL09	191	08/1995 → 09/2001		4,0	24	063522310290	**MSN2048**
14.284 LC, LLC, LLLC, LRC, LLRC, LLLRC	D 0836 LF 01	206	10/1998 → 09/2001		4,0	24	063522310290	**MSN2048**

		kW ÷ kW		i	kW	V	LONG	SHORT
MAN								
M 2000 L								
14.284, 14.285, LAC, LARC	D 0836 LF 01	206	06/1998 → 09/2001		4,0	24	063522310290	**MSN2048**
14.284, 14.285, LAK, LARK	D 0836 LF 01	206	06/1998 → 09/2001		4,0	24	063522310290	**MSN2048**
14.284, 14.285, LA-LF	D 0836 LF 01	206	06/1998 → 09/2001		4,0	24	063522310290	**MSN2048**
14.284, 14.285, LK, LRK	D 0836 LF 01	206	10/1998 → 09/2001		4,0	24	063522310290	**MSN2048**
14.285 LC, LLC, LLLC, LRC, LLRC, LLLRC, (LE280B)	D 0836 LFL 03	206	09/2000 → 06/2006		4,0	24	063522310290	**MSN2048**
15.163 LC, LLC, LRC	D 0824 LFL 06, D 0824 LFL 09	114	08/1995 → 09/2001		4,0	24	063522310290	**MSN2048**
15.163 LK, LRK	D 0824 LFL 06, D 0824 LFL 09	114	08/1995 → 09/2001		4,0	24	063522310290	**MSN2048**
15.224 LC, LLC, LLLC, LRC, LLRC, LLLRC	D 0826 LFL03, D 0826 LFL10	162	08/1995 → 09/2001		4,0	24	063522310290	**MSN2048**
15.224 LK, LRK	D 0826 LFL03, D 0826 LFL10	162	08/1995 → 09/2001		4,0	24	063522310290	**MSN2048**
15.225 LC, LLC, LLLC, LRC, LLRC, LLLRC, (LE220B)	D 0836 LFL 02	162	07/2001 → 08/2002		4,0	24	063522310290	**MSN2048**
15.225 LK, LRK, (LE220B)	D 0836 LFL 02	162	09/2000 → 08/2002		4,0	24	063522310290	**MSN2048**
15.255 LC, LLC, LLLC, LRC, LLRC, LLLRC, (LE250B)	D 0836 LFL 05	180	07/2001 → 08/2002		4,0	24	063522310290	**MSN2048**
15.255 LK, LRK, (LE250B)	D 0836 LFL 05	180	07/2001 → 08/2002		4,0	24	063522310290	**MSN2048**
15.263, 15.264 LC, LLC, LLLC, LRC, LLRC, LLLRC	D 0826 LFL09	191	08/1995 → 09/2001		4,0	24	063522310290	**MSN2048**
15.263, 15.264 LK, LRK	D 0826 LFL09	191	08/1995 → 09/2001		4,0	24	063522310290	**MSN2048**
15.284 LC, LLC, LLLC, LRC, LLRC, LLLRC	D 0836 LF 01	206	06/1998 → 09/2001		4,0	24	063522310290	**MSN2048**
15.284 LK, LRK	D 0836 LF 01	206	06/1998 → 09/2001		4,0	24	063522310290	**MSN2048**
15.285 LC, LLC, LLLC, LRC, LLRC, LLLRC, (LE280B)	D 0836 LFL 03	206	09/2000 → 09/2001		4,0	24	063522310290	**MSN2048**
15.285 LK, LRK, (LE280B)	D 0836 LFL 03	206	09/2000 → 09/2002		4,0	24	063522310290	**MSN2048**
18.224, 18.225, LAC, LARC	D 0826 LFL03, D 0826 LFL10, D 0836 LFL 02	162	08/1995 → 09/2001		4,0	24	063522310290	**MSN2048**
18.224, 18.225, LAK, LARK	D 0826 LFL03, D 0826 LFL10	162	08/1995 → 09/2001		4,0	24	063522310290	**MSN2048**

		kW ÷ kW		i	kW	V	LONG	SHORT
MAN								
M 2000 L								
18.224, 18.225, LC, LLC, LLLC, LRC, LLRC, LLLRC	D 0826 LFL03, D 0826 LFL10, D 0836 LFL 02	162	08/1995 → 09/2001		4,0	24	063522310290	**MSN2048**
18.224, 18.225, LK, LLK, LRK, LLRK	D 0826 LFL03, D 0826 LFL10	162	08/1995 → 09/2001		4,0	24	063522310290	**MSN2048**
18.224, 18.225, L-KO, LR-KO		162	05/2001 → 09/2006		4,0	24	063522310290	**MSN2048**
18.255 LAC, LARC	D 0836 LFL 05	180	07/2001 → 09/2006		4,0	24	063522310290	**MSN2048**
18.255 LAK, LARK		180	07/2001 → 09/2006		4,0	24	063522310290	**MSN2048**
18.255 LC, LLC, LLLC, LRC, LLRC, LLLRC, (LE250B)	D 0836 LFL 05	180	09/2002 → 09/2006		4,0	24	063522310290	**MSN2048**
18.255 LK, LLK, LRK, LLRK		180	11/2002 → 09/2006		4,0	24	063522310290	**MSN2048**
18.255 L-KO, LR-KO		180	07/2001 → 09/2006		4,0	24	063522310290	**MSN2048**
18.263, 18.264, LAC, LARC	D 0826 LFL09	191	08/1995 → 09/2001		4,0	24	063522310290	**MSN2048**
18.263, 18.264, LAK, LARK	D 0826 LFL09	191	08/1995 → 09/2001		4,0	24	063522310290	**MSN2048**
18.263, 18.264, LC, LLC, LLLC, LRC, LLRC, LLLRC	D 0826 LFL09	191	08/1995 → 09/2001		4,0	24	063522310290	**MSN2048**
18.263, 18.264, LK, LLK, LRK, LLRK	D 0826 LFL09	191	08/1995 → 09/2001		4,0	24	063522310290	**MSN2048**
18.284 LAC, LARC	D 0836 LF 01	206	06/1998 → 09/2001		4,0	24	063522310290	**MSN2048**
18.284 LAK, LARK	D 0836 LF 01	206	06/1998 → 09/2001		4,0	24	063522310290	**MSN2048**
18.284 LC, LLC, LLLC, LRC, LLRC, LLLRC	D 0836 LF 01	206	06/1998 → 09/2001		4,0	24	063522310290	**MSN2048**
18.284, 18.285, LK, LLK, LRK, LLRK	D 0836 LF 01	206	06/1998 → 09/2001		4,0	24	063522310290	**MSN2048**
18.284, 18.285, L-KO, LR-KO	D 0836 LF 01	206	06/1998 → 09/2001		4,0	24	063522310290	**MSN2048**
18.285 LAC, LARC (LE280B)	D 0836 LFL 03	206	07/2001 → 08/2002		4,0	24	063522310290	**MSN2048**
18.285 LAK, LARK, (LE280B)	D 0836 LFL 03	206	07/2001 → 08/2002		4,0	24	063522310290	**MSN2048**
18.285 LC, LLC, LLLC, LRC, LLRC, LLLRC, (LE280B)	D 0836 LFL 03	206	09/2002 → 09/2006		4,0	24	063522310290	**MSN2048**
20.224 LNLC, LNLLC		162	05/2001 → 09/2006		4,0	24	063522310290	**MSN2048**
20.255 LNLC, LNLLC		180	07/2001 → 09/2006		4,0	24	063522310290	**MSN2048**
20.284, 20.285, LNLC, LNLLC		206	05/2001 → 09/2006		4,0	24	063522310290	**MSN2048**
26.284 DL-TM, DLR-TM		206	05/2001 → 12/2002		4,0	24	063522310290	**MSN2048**

		kW ÷ kW		i	kW	V	LONG	SHORT
MAN								
M 2000 L								
26.284, 26.285, DL-HK, DLR-HK		206	11/2002 → 12/2002		4,0	24	063522310290	**MSN2048**
M 2000 M								
12.224 MLS		162	02/2003 → 07/2005		4,0	24	063522310290	**MSN2048**
12.255 MLS		180	02/2003 → 07/2005		4,0	24	063522310290	**MSN2048**
12.284 MLS		206	09/2002 → 07/2005		4,0	24	063522310290	**MSN2048**
14.224 MAK	D 0826 LF15, D 0826 LF18	162	08/1995 → 09/2001		4,0	24	063522310290	**MSN2048**
14.224 MC, MLC, MLLC	D 0826 LF10, D 0826 LF15, D 0826 LF18	162	08/1995 → 09/2001		4,0	24	063522310290	**MSN2048**
14.224 MK	D 0826 LF15, D 0826 LF18	162	08/1995 → 09/2001		4,0	24	063522310290	**MSN2048**
14.224 MLS, MLRS	D 0826 LF15, D 0826 LF18	162	08/1995 → 09/2001		4,0	24	063522310290	**MSN2048**
14.225 MC, MLC, MLLC	D 0836 LF 02, D 0836 LF 04	162	10/2000 → 07/2005		4,0	24	063522310290	**MSN2048**
14.225 MLS, MLRS	D 0836 LF 04	162	02/2003 → 07/2005		4,0	24	063522310290	**MSN2048**
14.255 MAK		180	11/2002 → 07/2005		4,0	24	063522310290	**MSN2048**
14.255 MC, MLC, MLLC	D 0836 LF 05	180	09/2002 → 07/2005		4,0	24	063522310290	**MSN2048**
14.255 MLS, MLRS	D 0836 LF 05	180	01/2001 → 09/2006		4,0	24	063522310290	**MSN2048**
14.264 MC, MLC, MLLC	D 0826 LF17	191	08/1995 → 09/2001		4,0	24	063522310290	**MSN2048**
14.264 MLS, MLRS	D 0826 LF17	191	08/1995 → 09/2001		4,0	24	063522310290	**MSN2048**
14.284 MAK	D 0836 LF 01	206	06/1998 → 09/2001		4,0	24	063522310290	**MSN2048**
14.284 MA-KO, MA-LF	D 0836 LF 01	206	06/1998 → 09/2001		4,0	24	063522310290	**MSN2048**
14.284 MC, MLC, MLLC	D 0836 LF 01	206	06/1998 → 09/2001		4,0	24	063522310290	**MSN2048**
14.284 MLS, MLRS	D 0836 LF 01	206	06/1998 → 09/2001		4,0	24	063522310290	**MSN2048**
14.285 MLC, MLLC (ME280C)	D 0836 LFL 03	206	07/2001 → 08/2002		4,0	24	063522310290	**MSN2048**
18.224 MAC, MARC	D 0826 LF15, D 0826 LF18	162	08/1995 → 09/2001		4,0	24	063522310290	**MSN2048**
18.224 MAK, MARK	D 0826 LF15, D 0826 LF18	162	08/1995 → 09/2001		4,0	24	063522310290	**MSN2048**
18.224 MC, MLC, MLLC, MRC, MLRC, MLLRC	D 0826 LF15, D 0826 LF18	162	08/1995 → 09/2001		4,0	24	063522310290	**MSN2048**
18.224 MK,18.224 MLK, MRK, MLRK	D 0826 LF15, D 0826 LF18	162	08/1995 → 09/2001		4,0	24	063522310290	**MSN2048**
18.224 MLS, MLRS	D 0826 LF15, D 0826 LF18	162	08/1995 → 09/2001		4,0	24	063522310290	**MSN2048**
18.225 MAC, MARC	D 0836 LF 04	162	02/2003 → 07/2005		4,0	24	063522310290	**MSN2048**

		kW ÷ kW		i	kW	V	LONG	SHORT
MAN								
M 2000 M								
18.225 MC, MLC, MLLC, MRC, MLRC, MLLRC	D 0836 LF 04	162	10/2000 → 07/2005		4,0	24	063522310290	**MSN2048**
18.255 MAK, MARK		180	07/2001 → 02/2005		4,0	24	063522310290	**MSN2048**
18.255 MK, MLK, MRK, MLRK		180	11/2002 → 02/2005		4,0	24	063522310290	**MSN2048**
18.255 MLS, MLRS	D 0836 LF 05	180	01/2001 → 09/2006		4,0	24	063522310290	**MSN2048**
18.264 MAC, MARC	D 0826 LF17	191	08/1995 → 09/2001		4,0	24	063522310290	**MSN2048**
18.264 MAK, MARK	D 0826 LF17	191	08/1995 → 09/2001		4,0	24	063522310290	**MSN2048**
18.264 MC, MLC, MLLC, MRC, MLRC, MLLRC	D 0826 LF17	191	08/1995 → 09/2001		4,0	24	063522310290	**MSN2048**
18.264 MK,18.264 MLK, MRK, MLRK	D 0826 LF17	191	08/1995 → 09/2001		4,0	24	063522310290	**MSN2048**
18.264 MLS, MLRS	D 0826 LF17	191	08/1995 → 09/2001		4,0	24	063522310290	**MSN2048**
18.284 MAC, MARC	D 0836 LF 01	206	06/1998 → 09/2001		4,0	24	063522310290	**MSN2048**
18.284 MAK, MARK	D 0836 LF 01	206	06/1998 → 09/2001		4,0	24	063522310290	**MSN2048**
18.284 MC, MLC, MLLC, MRC, MLRC, LLRC	D 0836 LF 01	206	06/1998 → 09/2001		4,0	24	063522310290	**MSN2048**
18.284 MK,18.284 MLK, MRK, MLRK	D 0836 LF 01	206	06/1998 → 09/2001		4,0	24	063522310290	**MSN2048**
18.284 MLS, MLRS	D 0836 LF 01	206	06/1998 → 09/2001		4,0	24	063522310290	**MSN2048**
25.224 MNLC, MNLLC, MNLRC, MNLLRC, MVLC	D 0826 LF15, D 0826 LF18, D 0826 LFL10	162	08/1995 → 09/2001		4,0	24	063522310290	**MSN2048**
25.264 MNLC, MNLLC, MNLRC, MNLLRC, MVLC	D 0826 LF17	191	08/1995 → 09/2001		4,0	24	063522310290	**MSN2048**
25.285 MNLC, MNLLC, MNLRC, MNLLRC, MVLC	D 0836 LF 03, D 0836 LFL 03	206	02/2003 → 07/2005		4,0	24	063522310290	**MSN2048**
M 90								
12.192 F,12.192 FL	D 0826 LF01, D 0826 LF05, D 0826 LF07	140	07/1990 → 06/1996		4,0	24	063522310290	**MSN2048**
12.192 FA	D 0826 LF05, D 0826 LF07	140	10/1992 → 06/1996		4,0	24	063522310290	**MSN2048**
12.192 FAK	D 0826 LF05, D 0826 LF07	140	10/1992 → 06/1996		4,0	24	063522310290	**MSN2048**
12.192 FK	D 0826 LF01, D 0826 LF05, D 0826 LF07	140	07/1990 → 06/1996		4,0	24	063522310290	**MSN2048**
12.192 FS,12.192 FLS	D 0826 LF01, D 0826 LF05, D 0826 LF07	140	07/1990 → 06/1996		4,0	24	063522310290	**MSN2048**
12.222 F,12.222 FL	D 0826 LF11	162	05/1994 → 06/1996		4,0	24	063522310290	**MSN2048**

		kW ÷ kW		i	kW	V	LONG	SHORT
MAN								
M 90								
12.222 FA	D 0826 LF11	162	05/1994 → 06/1996		4,0	24	063522310290	**MSN2048**
12.222 FAK	D 0826 LF11	162	05/1994 → 06/1996		4,0	24	063522310290	**MSN2048**
12.222 FK	D 0826 LF11	162	05/1994 → 06/1996		4,0	24	063522310290	**MSN2048**
12.222 FLS	D 0826 LF11	162	05/1994 → 06/1996		4,0	24	063522310290	**MSN2048**
12.232 F,12.232 FL	D 0826 LF02, D 0826 LF06, D 0826 LF08	169	08/1988 → 06/1996		4,0	24	063522310290	**MSN2048**
12.232 FA	D 0826 LF02, D 0826 LF06, D 0826 LF08	169	05/1990 → 06/1996		4,0	24	063522310290	**MSN2048**
12.232 FAK	D 0826 LF02, D 0826 LF06, D 0826 LF08	169	05/1990 → 06/1996		4,0	24	063522310290	**MSN2048**
12.232 FK	D 0826 LF02, D 0826 LF06, D 0826 LF08	169	08/1988 → 06/1996		4,0	24	063522310290	**MSN2048**
12.232 FS,12.232 FLS	D 0826 LF02, D 0826 LF06, D 0826 LF08	169	08/1988 → 06/1996		4,0	24	063522310290	**MSN2048**
12.262 F,12.262 FL	D 0826 LF13	191	08/1995 → 06/1996		4,0	24	063522310290	**MSN2048**
12.262 FK	D 0826 LF13	191	08/1995 → 06/1996		4,0	24	063522310290	**MSN2048**
12.262 FS,12.262 FLS	D 0826 LF13	191	08/1995 → 06/1996		4,0	24	063522310290	**MSN2048**
12.272 F,12.272 FL	D 0826 LF04	198	10/1992 → 06/1996		4,0	24	063522310290	**MSN2048**
12.272 FA	D 0826 LF04	198	10/1993 → 04/1995		4,0	24	063522310290	**MSN2048**
12.272 FAK	D 0826 LF04	198	10/1993 → 04/1995		4,0	24	063522310290	**MSN2048**
12.272 FK	D 0826 LF04	198	10/1992 → 06/1996		4,0	24	063522310290	**MSN2048**
12.272 FS,12.272 FLS	D 0826 LF04	198	10/1992 → 06/1996		4,0	24	063522310290	**MSN2048**
14.152 F,14.152 FL	D 0824 LF 01	114	05/1994 → 06/1996		4,0	24	063522310290	**MSN2048**
14.152 FK	D 0824 LF 01	114	05/1994 → 06/1996		4,0	24	063522310290	**MSN2048**
14.152 FS,14.152 FLS	D 0824 LF 01	114	05/1994 → 06/1996		4,0	24	063522310290	**MSN2048**
14.162 F,14.162 FL	D 0824 LF 02	118	08/1995 → 06/1996		4,0	24	063522310290	**MSN2048**
14.162 FK	D 0824 LF 02	118	08/1995 → 06/1996		4,0	24	063522310290	**MSN2048**
14.162 FS,14.162 FLS	D 0824 LF 02	118	08/1995 → 06/1996		4,0	24	063522310290	**MSN2048**
14.192 F,14.192 FL	D 0826 TF	137	08/1988 → 06/1990		4,0	24	063522310290	**MSN2048**
14.192 F,14.192 FL	D 0826 LF01, D 0826 LF05, D 0826 LF07	140	07/1990 → 06/1996		4,0	24	063522310290	**MSN2048**
14.192 FK	D 0826 LF01, D 0826 LF05, D 0826 LF07	140	07/1990 → 06/1996		4,0	24	063522310290	**MSN2048**
14.192 FK	D 0826 TF	137	08/1988 → 06/1990		4,0	24	063522310290	**MSN2048**
14.192 FS,14.192 FLS	D 0826 TF	137	08/1988 → 06/1990		4,0	24	063522310290	**MSN2048**

		kW ÷ kW		i	kW	V	LONG	SHORT
MAN								
M 90								
14.192 FS,14.192 FLS	D 0826 LF01, D 0826 LF05, D 0826 LF07	140	07/1990 → 06/1996		4,0	24	063522310290	**MSN2048**
14.222 F,14.222 FL	D 0826 LF11	162	05/1994 → 06/1996		4,0	24	063522310290	**MSN2048**
14.222 FK	D 0826 LF11	162	05/1994 → 06/1996		4,0	24	063522310290	**MSN2048**
14.222 FLS	D 0826 LF11	162	05/1994 → 06/1996		4,0	24	063522310290	**MSN2048**
14.232 F,14.232 FL	D 0826 LF02, D 0826 LF06, D 0826 LF08	169	08/1988 → 06/1996		4,0	24	063522310290	**MSN2048**
14.232 FK	D 0826 LF02, D 0826 LF06, D 0826 LF08	169	08/1988 → 06/1996		4,0	24	063522310290	**MSN2048**
14.232 FS,14.232 FLS	D 0826 LF02, D 0826 LF06, D 0826 LF08	169	08/1988 → 06/1996		4,0	24	063522310290	**MSN2048**
14.262 F,14.262 FL	D 0826 LF13	191	08/1995 → 06/1996		4,0	24	063522310290	**MSN2048**
14.262 FK	D 0826 LF13	191	08/1995 → 06/1996		4,0	24	063522310290	**MSN2048**
14.262 FS,14.262 FLS	D 0826 LF13	191	08/1995 → 06/1996		4,0	24	063522310290	**MSN2048**
14.272 F,14.272 FL	D 0826 LF04	198	10/1992 → 06/1996		4,0	24	063522310290	**MSN2048**
14.272 FK	D 0826 LF04	198	10/1992 → 06/1996		4,0	24	063522310290	**MSN2048**
14.272 FS,14.272 FLS	D 0826 LF04	198	12/1992 → 06/1996		4,0	24	063522310290	**MSN2048**
17.192 F,17.192 FL	D 0826 TF	137	08/1988 → 06/1990		4,0	24	063522310290	**MSN2048**
17.192 F,17.192 FL	D 0826 LF01, D 0826 LF05	140	07/1990 → 04/1995		4,0	24	063522310290	**MSN2048**
17.192 FA	D 0826 LF01, D 0826 LF05, D 0826 LF07	140	07/1990 → 06/1996		4,0	24	063522310290	**MSN2048**
17.192 FA	D 0826 TF	137	02/1989 → 06/1990		4,0	24	063522310290	**MSN2048**
17.192 FAK	D 0826 TF	137	02/1989 → 06/1990		4,0	24	063522310290	**MSN2048**
17.192 FAK	D 0826 LF01, D 0826 LF05, D 0826 LF07	140	07/1990 → 06/1996		4,0	24	063522310290	**MSN2048**
17.192 FK	D 0826 TF	137	08/1988 → 06/1990		4,0	24	063522310290	**MSN2048**
17.192 FK	D 0826 LF01	140	07/1990 → 01/1991		4,0	24	063522310290	**MSN2048**
17.192 FS,17.192 FLS	D 0826 LF01, D 0826 LF05	140	07/1990 → 04/1995		4,0	24	063522310290	**MSN2048**
17.192 FS,17.192 FLS	D 0826 TF	137	08/1988 → 06/1990		4,0	24	063522310290	**MSN2048**
17.222 FA	D 0826 LF11	162	05/1994 → 06/1996		4,0	24	063522310290	**MSN2048**
17.222 FAK	D 0826 LF11	162	05/1994 → 06/1996		4,0	24	063522310290	**MSN2048**
17.232 F,17.232 FL	D 0826 LF02, D 0826 LF06	169	08/1988 → 04/1995		4,0	24	063522310290	**MSN2048**
17.232 FA	D 0826 LF02, D 0826 LF06, D 0826 LF08	169	02/1989 → 06/1996		4,0	24	063522310290	**MSN2048**

		kW ÷ kW		i	kW	V	LONG	SHORT
MAN								
M 90								
17.232 FAK	D 0826 LF02, D 0826 LF06, D 0826 LF08	169	02/1989 → 06/1996		4,0	24	063522310290	**MSN2048**
17.232 FK	D 0826 LF02	169	08/1988 → 01/1991		4,0	24	063522310290	**MSN2048**
17.232 FS,17.232 FLS	D 0826 LF02, D 0826 LF06	169	08/1988 → 04/1995		4,0	24	063522310290	**MSN2048**
17.272 FLS	D 0826 LF04	198	10/1992 → 05/1995		4,0	24	063522310290	**MSN2048**
18.192 F,18.192 FL,18.192 FLL	D 0826 LF01, D 0826 LF05, D 0826 LF07	140	09/1990 → 06/1996		4,0	24	063522310290	**MSN2048**
18.192 FK	D 0826 LF01, D 0826 LF05, D 0826 LF07	140	09/1990 → 06/1996		4,0	24	063522310290	**MSN2048**
18.222 F,18.222 FL,18.222 FLL	D 0826 LF11	162	05/1994 → 06/1996		4,0	24	063522310290	**MSN2048**
18.222 FK	D 0826 LF11	162	05/1994 → 06/1996		4,0	24	063522310290	**MSN2048**
18.232 F,18.232 FL,18.232 FLL	D 0826 LF02, D 0826 LF06, D 0826 LF08	169	09/1990 → 06/1996		4,0	24	063522310290	**MSN2048**
18.232 FK	D 0826 LF02, D 0826 LF06, D 0826 LF08	169	09/1990 → 06/1996		4,0	24	063522310290	**MSN2048**
18.262 F,18.262 FL,18.262 FLL	D 0826 LF13	191	08/1995 → 06/1996		4,0	24	063522310290	**MSN2048**
18.262 FK	D 0826 LF13	191	08/1995 → 06/1996		4,0	24	063522310290	**MSN2048**
18.272 F,18.272 FL,18.272 FLL	D 0826 LF04	198	10/1992 → 06/1996		4,0	24	063522310290	**MSN2048**
18.272 FK	D 0826 LF04	198	10/1992 → 06/1996		4,0	24	063522310290	**MSN2048**
24.192 FNL,24.192 FNLL,24.192 FVL	D 0826 LF01, D 0826 LF05, D 0826 LF07	140	07/1989 → 06/1996		4,0	24	063522310290	**MSN2048**
24.222 FNL,24.222 FNLL,24.222 FVL	D 0826 LF11	162	05/1994 → 06/1996		4,0	24	063522310290	**MSN2048**
24.232 FNL,24.232 FNLL,24.232 FVL	D 0826 LF02, D 0826 LF06, D 0826 LF08	169	07/1989 → 06/1996		4,0	24	063522310290	**MSN2048**
24.262 FNL,24.262 FNLL,24.262 FVL	D 0826 LF13	191	08/1995 → 06/1996		4,0	24	063522310290	**MSN2048**
24.272 FNL,24.272 FNLL,24.272 FVL	D 0826 LF04	198	10/1992 → 06/1996		4,0	24	063522310290	**MSN2048**
NG								
NG 262	D 2865 LUH09	191	06/1997 → 07/1998		5,4	24	063524160780	**MSN2064**
NG 262, NG 263	D 2866 LUH 22	191	07/1998 → 12/2001		5,4	24	063524160780	**MSN2064**
NG 262, NG 272	D 0826 LUH 01	191 198	08/1992 → 09/1995		4,0	24	063522310290	**MSN2048**
NG 262, NG 272	D 0826 LUH 01	191 198	08/1992 → 07/1998		5,4	24	063524160780	**MSN2064**

		kW ÷ kW		i	kW	V	MAGNETI MARELLI LONG	MAGNETI MARELLI SHORT
MAN								
NG								
NG 312	D 2865 LUH07	228	09/1995 → 07/1998		5,4	24	063524160780	**MSN2064**
NG 312, NG 313	D 2866 LUH26	228	07/1998 → 12/2001		5,4	24	063524160780	**MSN2064**
NL								
NL 202	D 0826 LUH/213	157	09/1989 → 04/1994		5,4	24	063524160780	**MSN2064**
NL 202, NL 222, NL 223	D 0826 LUH 03, D 0826 LUH 12	157 162	02/1996 → 09/2001		5,4	24	063524160780	**MSN2064**
NL 202, NL 262, NL 263	D 0826 LUH	184	02/1996 → 09/2001		5,4	24	063524160780	**MSN2064**
NL 243	E 2866 DUH 03, E 2866 DUH 04	180	01/2002 →		5,4	24	063524160780	**MSN2064**
NL 262	D 2865 LUH09	191	06/1997 → 09/2001		5,4	24	063524160780	**MSN2064**
NL 262, NL 263	D 2866 LUH 22	191	07/1998 → 09/2001		5,4	24	063524160780	**MSN2064**
NL 312	D 2865 LUH07	228	11/1995 → 07/1998		5,4	24	063524160780	**MSN2064**
NL 313	D 2866 LUH26	228	07/1998 → 09/2001		5,4	24	063524160780	**MSN2064**
NM								
223	D 0826 LOH 15	162	07/1998 → 06/2001		4,0	24	063522310290	**MSN2048**
223	D 0826 LOH 15	162	08/1987 →		5,4	24	063524160780	**MSN2064**
NM 152	D 0826 OH02	110	05/1990 → 10/1993		4,0	24	063522310290	**MSN2048**
NM 152	D 0824 LOH 01	114	04/1992 → 05/1996		4,0	24	063522310290	**MSN2048**
NM 182, NM 192	D 0826 LOH 01	130 140	05/1990 → 03/1997		4,0	24	063522310290	**MSN2048**
NM 182, NM 192	D 0826 LOH 01	130 140	10/1993 → 03/1997		5,4	24	063524160780	**MSN2064**
NM 222, NM 223	D 0826 LOH 15, D 0826 LUH 12	162	02/1996 → 06/2001		4,0	24	063522310290	**MSN2048**
NM 222, NM 223	D 0826 LOH 15, D 0826 LUH 12	162	06/1997 → 09/2001		5,4	24	063524160780	**MSN2064**
NU								
NU 263	D 0826 LUH 13	191	07/1998 → 09/2001		5,4	24	063524160780	**MSN2064**
NU 263	D 2866 LUH 22	191	07/1998 → 09/2001		5,4	24	063524160780	**MSN2064**
NU 263	D 2865 LUH09	191	09/1996 → 07/1998		5,4	24	063524160780	**MSN2064**
NU 313	D 2866 LUH26	228	07/1998 → 12/2001		5,4	24	063524160780	**MSN2064**
NU 313 15M	D 2866 LUH26	228	07/1998 → 12/2001		5,4	24	063524160780	**MSN2064**
R								
R 292, FR 292, FRH 292	D 2866 TOH/310, D 2866 TUH/290	213 229	04/1992 → 01/1993		5,4	24	063524160780	**MSN2064**
SG								
SG 240 H,SG 292 H	D 2866 TUH/290	213	11/1984 → 09/1989		5,4	24	063524160780	**MSN2064**
SG 242,SG 292	D 2866 TOH/310, D 2866 TUH/290	224 229	04/1992 → 04/1993		5,4	24	063524160780	**MSN2064**
SG 312,SG 322	D 2865 LUH07, D 2865 LUH08	228 235	02/1996 → 06/1997		5,4	24	063524160780	**MSN2064**
SM								
SM 152	D 0826 OH02	110 114	11/1987 → 04/1994		4,0	24	063522310290	**MSN2048**
SM 182,SM 192	D 0826 LOH 01	130 140	11/1987 → 02/1995		4,0	24	063522310290	**MSN2048**

		kW ÷ kW		i	kW	V	LONG	SHORT
MAN								
SM								
SM 182,SM 192	D 0826 LOH 01	130 140	04/1992 → 02/1995		5,4	24	063524160780	**MSN2064**
SU								
SU 263	D 2866 LUH 25	265	06/2004 → 09/2006		5,4	24	063524160780	**MSN2064**
SU 272	D 2865 LUH02	198	04/1993 → 05/1995		5,4	24	063524160780	**MSN2064**
SU 283	D 0836 LOH 02, D 0836 LOH 51, D 0836 LOH 55	206	06/2004 → 09/2006		4,0	24	063522310290	**MSN2048**
SU 283	D 0836 LOH 02, D 0836 LOH 51, D 0836 LOH 55	206	09/2003 → 09/2006		5,4	24	063524160780	**MSN2064**
SU 292	D 2866 TOH/310	229	04/1992 → 04/1993		5,4	24	063524160780	**MSN2064**
SU 313	D 2866 LUH 24	228	09/2003 → 09/2006		5,4	24	063524160780	**MSN2064**
SU 322	D 2865 LUH08	235	05/1995 → 06/1997		5,4	24	063524160780	**MSN2064**
UL								
UL 272	D 2865 LUH02, D 2865 LUH05	198	03/1993 → 07/1994		5,4	24	063524160780	**MSN2064**
UL 312,UL 322	D 2865 LUH07, D 2865 LUH08	228 235	04/1992 → 09/1995		5,4	24	063524160780	**MSN2064**
UL 313	D 2866 LUH 20, D 2866 LUH26	228	09/1996 → 09/2001		5,4	24	063524160780	**MSN2064**
UL 353	D 2866 LUH 21	257	06/1997 → 12/2001		5,4	24	063524160780	**MSN2064**
MERCEDES-BENZ								
ATEGO								
1017 A	OM 904.911, OM 904.917	125	01/1998 → 10/2004		4,0	24	063522310330	**MSN2049**
1017 AK	OM 904.911	125	01/1998 → 10/2004		4,0	24	063522310330	**MSN2049**
1017 K	OM 904.911	125	01/1998 → 10/2004		4,0	24	063522310330	**MSN2049**
1017 K	OM 904.911, OM 904.917	125	01/1998 → 10/2004		4,0	24	063522310330	**MSN2049**
1017 KO, 1018 KO	OM 900.913, OM 904.911, OM 904.917	125 130	01/1998 → 10/2004		4,0	24	063522310330	**MSN2049**
1017, 1017 L	OM 904.911, OM 904.917	125	01/1998 → 10/2004		4,0	24	063522310330	**MSN2049**
1023 AK	OM 906.910, OM 906.915	170	01/1998 → 09/2004		4,0	24	063522310330	**MSN2049**
1023, 1023 L	OM 906.910	170	01/1998 → 10/2004		4,0	24	063522310330	**MSN2049**
1214 K	OM 904.910, OM 904.916	100	01/1998 → 09/2004		4,0	24	063522310330	**MSN2049**
1214, 1214 L	OM 904.910, OM 904.916	100	01/1998 → 10/2004		4,0	24	063522310330	**MSN2049**
1215 K	OM 904.922	112	01/1998 → 10/2004		4,0	24	063522310330	**MSN2049**

		kW ÷ kW		i	kW	V	LONG	SHORT
MERCEDES-BENZ								
ATEGO								
1215, 1215 L	OM 904.922	112	01/1998 → 10/2004		4,0	24	063522310330	**MSN2049**
1217 K	OM 904.911, OM 904.917	125	01/1998 → 10/2004		4,0	24	063522310330	**MSN2049**
1217 KO	OM 904.911	125	01/1998 → 10/2004		4,0	24	063522310330	**MSN2049**
1217, 1217 L	OM 904.911, OM 904.917	125	01/1998 → 10/2004		4,0	24	063522310330	**MSN2049**
1223 K	OM 906.910, OM 906.915	170	01/1998 → 09/2004		4,0	24	063522310330	**MSN2049**
1223, 1223 L	OM 906.910, OM 906.915	170	01/1998 → 10/2004		4,0	24	063522310330	**MSN2049**
1225 AF	OM 906.919, OM 906.939	180	01/1998 → 10/2004		4,0	24	063522310330	**MSN2049**
1225 F	OM 906.919, OM 906.939	180	01/1998 → 10/2004		4,0	24	063522310330	**MSN2049**
1228, 1228 L	OM 906.911, OM 906.916	205	01/1998 → 10/2004		4,0	24	063522310330	**MSN2049**
1317 A	OM 904.911, OM 904.917	125	01/1998 → 10/2004		4,0	24	063522310330	**MSN2049**
1317 AK	OM 900.913, OM 904.911, OM 904.917	125 130	01/1998 → 10/2004		4,0	24	063522310330	**MSN2049**
1317 K	OM 904.911, OM 904.917	125	01/1998 → 10/2004		4,0	24	063522310330	**MSN2049**
1317 KO, 1317 LKO, 1318 KO, 1318 LKO	OM 900.913, OM 904.911, OM 904.917	125 130	01/1998 → 10/2004		4,0	24	063522310330	**MSN2049**
1317, 1317 L	OM 904.911, OM 904.917	125	01/1998 → 10/2004		4,0	24	063522310330	**MSN2049**
1323 AK	OM 906.910, OM 906.915	170	01/1998 → 09/2004		4,0	24	063522310330	**MSN2049**
1323 K	OM 906.910, OM 906.915	170	01/1998 → 09/2004		4,0	24	063522310330	**MSN2049**
1323 KO, 1323 LKO	OM 906.910, OM 906.915	170	01/1998 → 10/2004		4,0	24	063522310330	**MSN2049**
1323 LS	OM 906.910	170	01/1998 → 10/2004		4,0	24	063522310330	**MSN2049**
1323, 1323 L	OM 906.910, OM 906.915	170	01/1998 → 10/2004		4,0	24	063522310330	**MSN2049**
1325 AF	OM 906.919, OM 906.939	180	01/1998 → 10/2004		4,0	24	063522310330	**MSN2049**
1325 F	OM 906.919, OM 906.939	180	01/1998 → 10/2004		4,0	24	063522310330	**MSN2049**
1328 AF	OM 906.911, OM 906.916	205	01/1998 → 10/2004		4,0	24	063522310330	**MSN2049**
1328 F	OM 906.911, OM 906.916	205	01/1998 → 10/2004		4,0	24	063522310330	**MSN2049**

		kW ÷ kW			kW	V	LONG	SHORT
MERCEDES-BENZ								
ATEGO								
1328 LS	OM 906.911	205	01/1998 → 10/2004		4,0	24	063522310330	**MSN2049**
1328, 1328 L	OM 906.911, OM 906.916	205	01/1998 → 10/2004		4,0	24	063522310330	**MSN2049**
1517 A	OM 904.911, OM 904.917	125	01/1998 → 10/2004		4,0	24	063522310330	**MSN2049**
1517 AK	OM 904.911, OM 904.917	125	01/1998 → 09/2004		4,0	24	063522310330	**MSN2049**
1517 K	OM 904.911	125	01/1998 → 10/2004		4,0	24	063522310330	**MSN2049**
1517, 1517 L	OM 904.911, OM 904.917	125	01/1998 → 10/2004		4,0	24	063522310330	**MSN2049**
1523 A	OM 906.910, OM 906.915	170	01/1998 → 10/2004		4,0	24	063522310330	**MSN2049**
1523 AK	OM 906.910, OM 906.915	170	01/1998 → 10/2004		4,0	24	063522310330	**MSN2049**
1523 K	OM 906.910, OM 906.915	170	01/1998 → 10/2004		4,0	24	063522310330	**MSN2049**
1523 KO	OM 906.910	170	01/1998 → 10/2004		4,0	24	063522310330	**MSN2049**
1523 KO		170	01/1998 → 10/2004		4,0	24	063522310330	**MSN2049**
1523, 1523 L	OM 906.910, OM 906.915	170	01/1998 → 10/2004		4,0	24	063522310330	**MSN2049**
1525 AF	OM 906.919, OM 906.939	180	01/1998 → 10/2004		4,0	24	063522310330	**MSN2049**
1528 AF	OM 906.911, OM 906.916	205	01/1998 → 10/2004		4,0	24	063522310330	**MSN2049**
1528 AK	OM 906.911, OM 906.916	205	01/1998 → 09/2004		4,0	24	063522310330	**MSN2049**
1528 F	OM 906.911, OM 906.916	205	01/1998 → 09/2004		4,0	24	063522310330	**MSN2049**
1528 K	OM 906.911, OM 906.916	205	01/1998 → 09/2004		4,0	24	063522310330	**MSN2049**
1528, 1528 L	OM 906.911, OM 906.916	205	01/1998 → 10/2004		4,0	24	063522310330	**MSN2049**
712	OM 904.909	90	01/1998 → 10/2004		4,0	24	063522310330	**MSN2049**
714 K	OM 904.910, OM 904.916	100	01/1998 → 09/2004		4,0	24	063522310330	**MSN2049**
714, 714 L	OM 904.910, OM 904.916	100	01/1998 → 10/2004		4,0	24	063522310330	**MSN2049**
715,715 L	OM 904.922	112	01/1998 → 10/2004		4,0	24	063522310330	**MSN2049**
717 K	OM 904.911, OM 904.917	125	01/1998 → 09/2004		4,0	24	063522310330	**MSN2049**
717, 717 L	OM 904.911, OM 904.917	125	01/1998 → 10/2004		4,0	24	063522310330	**MSN2049**
812	OM 904.909	90	01/1998 → 10/2004		4,0	24	063522310330	**MSN2049**

		kW ÷ kW		i	kW	V	LONG	SHORT
MERCEDES-BENZ								
ATEGO								
814 K	OM 904.910, OM 904.916	100	01/1998 → 10/2004		4,0	24	063522310330	**MSN2049**
814, 814 L	OM 904.910, OM 904.916, OM 904.930	100	01/1998 → 10/2004		4,0	24	063522310330	**MSN2049**
815 F	OM 900.912, OM 904.922	112 115	01/1998 → 10/2004		4,0	24	063522310330	**MSN2049**
815 K	OM 904.922	112	01/1998 → 10/2004		4,0	24	063522310330	**MSN2049**
815, 815 L	OM 904.922	112	01/1998 → 09/2004		4,0	24	063522310330	**MSN2049**
815,815 L	OM 904.922	112	01/1998 → 09/2004		4,0	24	063522310330	**MSN2049**
817 K	OM 904.911, OM 904.917	125	01/1998 → 10/2004		4,0	24	063522310330	**MSN2049**
817 K	OM 904.911	125	01/1998 → 10/2004		4,0	24	063522310330	**MSN2049**
817, 817 L	OM 904.911, OM 904.917	125	01/1998 → 10/2004		4,0	24	063522310330	**MSN2049**
823 K	OM 906.910, OM 906.915	170	01/1998 → 09/2004		4,0	24	063522310330	**MSN2049**
823, 823 L	OM 906.910, OM 906.915	170	01/1998 → 09/2004		4,0	24	063522310330	**MSN2049**
917 AF	OM 904.911, OM 904.917, OM 904.949	125 128	01/1998 → 10/2004		4,0	24	063522310330	**MSN2049**
917 K	OM 904.911, OM 904.917	125	01/1998 → 10/2004		4,0	24	063522310330	**MSN2049**
917, 917 L	OM 904.911, OM 904.917	125	01/1998 → 10/2004		4,0	24	063522310330	**MSN2049**
923 K	OM 906.910, OM 906.915	170	01/1998 → 10/2004		4,0	24	063522310330	**MSN2049**
923, 923 L	OM 906.910	170	01/1998 → 10/2004		4,0	24	063522310330	**MSN2049**
925 AF	OM 906.919, OM 906.939	180	01/1998 → 10/2004		4,0	24	063522310330	**MSN2049**
ATEGO 2								
1015 K, 1016 K	OM 900.912, OM 900.918, OM 904.922	112 115	02/2006 →		4,0	24	063522310330	**MSN2049**
1016, 1016 L	OM 900.912, OM 900.918	115	02/2006 →		4,0	24	063522310330	**MSN2049**
1016, 1016 L	OM 924.935	115	02/2006 →		4,0	24	063522310330	**MSN2049**
1017 K, 1018 K	OM 900.913, OM 900.919, OM 904.911	125 130	02/2006 →		4,0	24	063522310330	**MSN2049**
1018 A	OM 900.913, OM 900.919	130	02/2006 →		4,0	24	063522310330	**MSN2049**

		kW ÷ kW		i	kW	V	LONG	SHORT
MERCEDES-BENZ								
ATEGO 2								
1018 AK	OM 900.913	130	02/2006 →		4,0	24	063522310330	**MSN2049**
1018, 1018 L	OM 900.913, OM 900.919	130	02/2006 →		4,0	24	063522310330	**MSN2049**
1022 A	OM 924.922	160	06/2006 →		4,0	24	063522310330	**MSN2049**
1022 AK	OM 924.922	160	06/2006 →		4,0	24	063522310330	**MSN2049**
1022 K	OM 924.920, OM 924.922	160	10/2004 →		4,0	24	063522310330	**MSN2049**
1022 KO	OM 924.922	160	06/2006 →		4,0	24	063522310330	**MSN2049**
1022, 1022 L	OM 924.920, OM 924.922, OM 924.930	160	10/2004 →		4,0	24	063522310330	**MSN2049**
1023 A, 1024 A	OM 902.916, OM 906.910, OM 906.915	170 175	10/2004 →		4,0	24	063522310330	**MSN2049**
1023, 1023 L, 1024, 1024 L	OM 902.916, OM 906.910, OM 906.915	170 175	02/2006 →		4,0	24	063522310330	**MSN2049**
1024 AK	OM 902.916	175	02/2006 →		4,0	24	063522310330	**MSN2049**
1024 K	OM 902.916	175	02/2006 →		4,0	24	063522310330	**MSN2049**
1024, 1024 L	OM 925.920	175	02/2006 →		4,0	24	063522310330	**MSN2049**
1215, 1215 L, 1216, 1216 L	OM 900.912, OM 904.922	112 115	02/2006 →		4,0	24	063522310330	**MSN2049**
1216 K	OM 900.912	115	02/2006 →		4,0	24	063522310330	**MSN2049**
1216, 1216 L	OM 924.935	115	02/2006 →		4,0	24	063522310330	**MSN2049**
1218 K	OM 900.913	130	02/2006 →		4,0	24	063522310330	**MSN2049**
1218, 1218 L	OM 900.913	130	02/2006 →		4,0	24	063522310330	**MSN2049**
1222 AF	OM 924.922	160	06/2006 →		4,0	24	063522310330	**MSN2049**
1222 F	OM 924.922	160	06/2006 →		4,0	24	063522310330	**MSN2049**
1222 K	OM 924.920, OM 924.922	160	10/2004 →		4,0	24	063522310330	**MSN2049**
1222, 1222 L	OM 924.920, OM 924.922, OM 924.930	160	10/2004 →		4,0	24	063522310330	**MSN2049**
1223, 1223 L, 1224, 1224 L	OM 902.916, OM 906.910, OM 906.915	170 175	02/2006 →		4,0	24	063522310330	**MSN2049**
1224 K	OM 902.916	175	02/2006 →		4,0	24	063522310330	**MSN2049**
1226 AF	OM 902.917	188	02/2006 →		4,0	24	063522310330	**MSN2049**
1226 F	OM 902.917	188	02/2006 →		4,0	24	063522310330	**MSN2049**
1226, 1226 L	OM 902.917	188	02/2006 →		4,0	24	063522310330	**MSN2049**
1228, 1228 L, 1229, 1229 L	OM 902.918, OM 906.911, OM 906.916	205 210	10/2004 →		4,0	24	063522310330	**MSN2049**
1318 A	OM 900.913, OM 904.949	130	02/2006 →		4,0	24	063522310330	**MSN2049**

		kW ÷ kW		i	kW	V	LONG	SHORT
MERCEDES-BENZ								
ATEGO 2								
1318 AK	OM 900.913	130	02/2006 →		4,0	24	063522310330	**MSN2049**
1318 K	OM 900.913	130	02/2006 →		4,0	24	063522310330	**MSN2049**
1318, 1318 L	OM 900.913	130	02/2006 →		4,0	24	063522310330	**MSN2049**
1322 A	OM 924.922	160	06/2006 →		4,0	24	063522310330	**MSN2049**
1322 AF	OM 924.922	160	06/2006 →		4,0	24	063522310330	**MSN2049**
1322 AK	OM 924.922	160	06/2006 →		4,0	24	063522310330	**MSN2049**
1322 F	OM 924.922	160	06/2006 →		4,0	24	063522310330	**MSN2049**
1322 K	OM 924.920, OM 924.922	160	10/2004 →		4,0	24	063522310330	**MSN2049**
1322 LKO	OM 924.922	160	06/2006 →		4,0	24	063522310330	**MSN2049**
1322 LS	OM 924.920, OM 924.922	160	10/2004 →		4,0	24	063522310330	**MSN2049**
1322, 1322 L	OM 924.920, OM 924.922, OM 924.930	160	10/2004 →		4,0	24	063522310330	**MSN2049**
1323 A, 1324 A	OM 902.916, OM 906.910, OM 906.915	170 175	02/2006 →		4,0	24	063522310330	**MSN2049**
1323 LS, 1324 LS	OM 902.916, OM 906.910, OM 906.915	170 175	02/2006 →		4,0	24	063522310330	**MSN2049**
1323, 1323 L, 1324, 1324 L	OM 902.916, OM 906.910, OM 906.915	170 175	02/2006 →		4,0	24	063522310330	**MSN2049**
1324 AK	OM 902.916	175	02/2006 →		4,0	24	063522310330	**MSN2049**
1324 K	OM 902.916	170 175	02/2006 →		4,0	24	063522310330	**MSN2049**
1324 LKO	OM 902.916	175	02/2006 →		4,0	24	063522310330	**MSN2049**
1326 AF	OM 902.917	188	02/2006 →		4,0	24	063522310330	**MSN2049**
1326 F	OM 902.917	188	02/2006 →		4,0	24	063522310330	**MSN2049**
1326 LS	OM 902.917	188	02/2006 →		4,0	24	063522310330	**MSN2049**
1326, 1326 L	OM 902.917	188	02/2006 →		4,0	24	063522310330	**MSN2049**
1328 LS, 1329 LS	OM 902.918, OM 906.911, OM 906.916	205 210	10/2004 →		4,0	24	063522310330	**MSN2049**
1328, 1328 L, 1329, 1329 L	OM 902.918, OM 906.911, OM 906.916	205 210	10/2004 →		4,0	24	063522310330	**MSN2049**
1329 AF	OM 902.918	210	02/2006 →		4,0	24	063522310330	**MSN2049**
1329 F	OM 902.918	210	02/2006 →		4,0	24	063522310330	**MSN2049**
1518 A	OM 900.913	130	02/2006 →		4,0	24	063522310330	**MSN2049**
1518 AK	OM 900.913	130	02/2006 →		4,0	24	063522310330	**MSN2049**
1518 K	OM 900.913	130	02/2006 →		4,0	24	063522310330	**MSN2049**
1518, 1518 L	OM 900.913, OM 904.962, OM 904.967, OM 904.968, OM 904.972, OM 904.976	130	02/2006 →		4,0	24	063522310330	**MSN2049**

		kW ÷ kW		i	kW	V	LONG	SHORT
MERCEDES-BENZ								
ATEGO 2								
1522 A	OM 924.922	160	06/2006 →		4,0	24	063522310330	**MSN2049**
1522 AF	OM 924.922	160	06/2006 →		4,0	24	063522310330	**MSN2049**
1522 AK	OM 924.922	160	06/2006 →		4,0	24	063522310330	**MSN2049**
1522 F	OM 924.922	160	06/2006 →		4,0	24	063522310330	**MSN2049**
1522 K	OM 924.920, OM 924.922	160	10/2004 →		4,0	24	063522310330	**MSN2049**
1522, 1522 L	OM 924.920, OM 924.922, OM 924.930	160	10/2004 →		4,0	24	063522310330	**MSN2049**
1523 A, 1524 A	OM 902.916, OM 906.910, OM 906.915	170 175	02/2006 →		4,0	24	063522310330	**MSN2049**
1523 K, 1524 K	OM 902.916	175	02/2006 →		4,0	24	063522310330	**MSN2049**
1523, 1523 L, 1524, 1524 L	OM 902.916, OM 906.910, OM 906.915	170 175	02/2006 →		4,0	24	063522310330	**MSN2049**
1524 AK	OM 902.916	175	02/2006 →		4,0	24	063522310330	**MSN2049**
1526 AF	OM 902.917	188	02/2006 →		4,0	24	063522310330	**MSN2049**
1526 AK	OM 902.917	188	02/2006 →		4,0	24	063522310330	**MSN2049**
1526 K	OM 902.917	188	02/2006 →		4,0	24	063522310330	**MSN2049**
1526, 1526 L	OM 902.917	188	02/2006 →		4,0	24	063522310330	**MSN2049**
1528, 1528 L, 1529, 1529 L	OM 902.918, OM 906.911, OM 906.916	205 210	10/2004 →		4,0	24	063522310330	**MSN2049**
1529 AF	OM 902.918	210	02/2006 →		4,0	24	063522310330	**MSN2049**
1529 AK	OM 902.918	210	02/2006 →		4,0	24	063522310330	**MSN2049**
1529 F	OM 902.918	210	02/2006 →		4,0	24	063522310330	**MSN2049**
1529 K	OM 902.918	210	02/2006 →		4,0	24	063522310330	**MSN2049**
712, 713	OM 900.911, OM 900.917, OM 904.909, OM 904.915	90 95	02/2006 →		4,0	24	063522310330	**MSN2049**
715, 715 L, 716, 716 L	OM 900.912, OM 900.918, OM 904.922	112 115	02/2006 →		4,0	24	063522310330	**MSN2049**
812, 813	OM 900.911, OM 900.917, OM 904.909	90 95	02/2006 →		4,0	24	063522310330	**MSN2049**
815 K, 816 K	OM 900.912, OM 900.918, OM 904.922	112 115	02/2006 →		4,0	24	063522310330	**MSN2049**
815, 815 L, 816, 816 L	OM 900.912, OM 900.918, OM 904.922	112 115	02/2006 →		4,0	24	063522310330	**MSN2049**
816, 816 L	OM 924.935	115	02/2006 →		4,0	24	063522310330	**MSN2049**

		kW ÷ kW		i	kW	V	LONG	SHORT
MERCEDES-BENZ								
ATEGO 2								
816, 816 L	OM 900.912	115	02/2006 →		4,0	24	063522310330	**MSN2049**
818 K	OM 900.913, OM 900.919	130	10/2004 →		4,0	24	063522310330	**MSN2049**
818, 818 L	OM 900.913, OM 900.919	130	10/2004 →		4,0	24	063522310330	**MSN2049**
822 F	OM 924.922	160	06/2006 →		4,0	24	063522310330	**MSN2049**
822 K	OM 924.920, OM 924.922	160	10/2004 →		4,0	24	063522310330	**MSN2049**
822 K	OM 924.920	160	10/2004 →		4,0	24	063522310330	**MSN2049**
822, 822 L	OM 924.920, OM 924.922, OM 924.930	160	10/2004 →		4,0	24	063522310330	**MSN2049**
823, 823 L, 824, 824 L	OM 902.916, OM 906.910, OM 906.915	170 175	02/2006 →		4,0	24	063522310330	**MSN2049**
824 K	OM 902.916	175	02/2006 →		4,0	24	063522310330	**MSN2049**
915, 915 L, 916, 916 L	OM 900.912, OM 900.918, OM 904.922	112 115	02/2006 →		4,0	24	063522310330	**MSN2049**
916 K	OM 900.912, OM 900.918	115	02/2006 →		4,0	24	063522310330	**MSN2049**
916, 916 L	OM 924.935	115	02/2006 →		4,0	24	063522310330	**MSN2049**
918 AF	OM 900.913	130	02/2006 →		4,0	24	063522310330	**MSN2049**
918 K	OM 900.913, OM 900.919	130	02/2006 →		4,0	24	063522310330	**MSN2049**
918, 918 L	OM 900.913, OM 900.919	130	02/2006 →		4,0	24	063522310330	**MSN2049**
922 AF	OM 924.922	160	06/2006 →		4,0	24	063522310330	**MSN2049**
922 K	OM 924.920, OM 924.922	160	10/2004 →		4,0	24	063522310330	**MSN2049**
922, 922 L	OM 924.920, OM 924.922, OM 924.930	160	10/2004 →		4,0	24	063522310330	**MSN2049**
923, 923 L, 924, 924 L	OM 902.916, OM 906.910, OM 906.915	170 175	02/2006 →		4,0	24	063522310330	**MSN2049**
924 K	OM 902.916	175	02/2006 →		4,0	24	063522310330	**MSN2049**
924, 924 L	OM 925.920	175	02/2006 →		4,0	24	063522310330	**MSN2049**
926 AF	OM 902.917	188	02/2006 →		4,0	24	063522310330	**MSN2049**
926, 926 L	OM 925.920	188	02/2006 →		4,0	24	063522310330	**MSN2049**
ATEGO II								
1823 AK	OM 906.922	170	05/1998 → 09/2004		4,0	24	063522310330	**MSN2049**
1823 K	OM 906.920	170	05/1998 → 09/2004		4,0	24	063522310330	**MSN2049**
1823 LS	OM 906.920	170	05/1998 → 09/2004		4,0	24	063522310330	**MSN2049**

		kW ÷ kW		i	kW	V	LONG	SHORT
MERCEDES-BENZ								
ATEGO II								
1823, 1823 L	OM 906.920, OM 906.925	170	05/1998 → 10/2004		4,0	24	063522310330	**MSN2049**
1828 A	OM 906.923	205	05/1998 → 09/2004		4,0	24	063522310330	**MSN2049**
1828 AK	OM 906.923	205	05/1998 → 09/2004		4,0	24	063522310330	**MSN2049**
1828 K	OM 906.921	205	05/1998 → 09/2004		4,0	24	063522310330	**MSN2049**
1828 LS	OM 906.921	205	05/1998 → 09/2004		4,0	24	063522310330	**MSN2049**
1828, 1828 L	OM 906.921, OM 906.926	205	05/1998 → 09/2004		4,0	24	063522310330	**MSN2049**
2523 L	OM 906.920	170	05/1998 → 09/2004		4,0	24	063522310330	**MSN2049**
2528 L	OM 906.921, OM 906.926	205	05/1998 → 09/2004		4,0	24	063522310330	**MSN2049**
2628	OM 906.921	205	05/1998 → 09/2004		4,0	24	063522310330	**MSN2049**
2628 B	OM 906.921	205	05/1998 → 09/2004		4,0	24	063522310330	**MSN2049**
2628 K	OM 906.921	205	05/1998 → 09/2004		4,0	24	063522310330	**MSN2049**
AXOR								
1823	OM 906.920	170	01/2002 → 10/2004		4,0	24	063522310330	**MSN2049**
1823 K	OM 906.920	170	01/2002 → 10/2004		4,0	24	063522310330	**MSN2049**
2523	OM 906.920	170	01/2002 → 10/2004		4,0	24	063522310330	**MSN2049**
2523 K	OM 906.920	170	01/2002 → 10/2004		4,0	24	063522310330	**MSN2049**
2528	OM 906.921	205	01/2002 → 10/2004		4,0	24	063522310330	**MSN2049**
2623 L	OM 906.920	170	01/2002 → 10/2004		4,0	24	063522310330	**MSN2049**
2628 B	OM 906.921	205	01/2002 → 10/2004		4,0	24	063522310330	**MSN2049**
2628 K	OM 906.921	205	01/2002 → 10/2004		4,0	24	063522310330	**MSN2049**
2628 L	OM 906.921	205	01/2002 → 10/2004		4,0	24	063522310330	**MSN2049**
3228 C	OM 906.921	205	01/2002 → 10/2004		4,0	24	063522310330	**MSN2049**
AXOR 2								
1823 AK, 1824 AK	OM 902.913, OM 906.922	170 175	09/2006 →		4,0	24	063522310330	**MSN2049**
1823 K, 1823 KL, 1824 K	OM 902.913, OM 906.920	170 175	09/2006 →		4,0	24	063522310330	**MSN2049**
1823 LS, 1824 LS	OM 902.913, OM 906.920	170 175	09/2006 →		4,0	24	063522310330	**MSN2049**
1823, 1823 L, 1824, 1824 L, LL	OM 902.913, OM 906.920	170 175	09/2006 →		4,0	24	063522310330	**MSN2049**
1824 A		170 175	09/2006 →		4,0	24	063522310330	**MSN2049**
1826 AK	OM 902.914	188	09/2006 →		4,0	24	063522310330	**MSN2049**
1826 K	OM 902.914	188	09/2006 →		4,0	24	063522310330	**MSN2049**
1826 LS	OM 902.914	188	09/2006 →		4,0	24	063522310330	**MSN2049**
1826, 1826 L, LL	OM 902.914	188	09/2006 →		4,0	24	063522310330	**MSN2049**

		kW ÷ kW		i	kW	V	LONG	SHORT
MERCEDES-BENZ								
AXOR 2								
1828 A, 1829 A	OM 902.932, OM 906.923, OM 906.928	205 210	09/2006 →		4,0	24	063522310330	**MSN2049**
1828 AK, 1829 AK	OM 902.932, OM 906.923, OM 906.928	205 210	09/2006 →		4,0	24	063522310330	**MSN2049**
1828 K, 1828 KL, 1829 K	OM 902.915, OM 906.921, OM 906.926	205 210	09/2006 →		4,0	24	063522310330	**MSN2049**
1828, 1828 L, 1829, 1829 L, LL	OM 902.915, OM 906.921, OM 906.926	205 210	09/2006 →		4,0	24	063522310330	**MSN2049**
1829 LS	OM 902.915	210	09/2006 →		4,0	24	063522310330	**MSN2049**
1833 A	OM 926.913	240	10/2004 → 08/2006		4,0	24	063522310330	**MSN2049**
1833 AK	OM 926.913	240	10/2004 → 08/2006		4,0	24	063522310330	**MSN2049**
1833 K	OM 926.913	240	10/2004 → 08/2006		4,0	24	063522310330	**MSN2049**
1833 LS	OM 926.913	240	10/2004 → 08/2006		4,0	24	063522310330	**MSN2049**
1833, 1833 L, LL	OM 926.913	240	10/2004 → 08/2006		4,0	24	063522310330	**MSN2049**
2528 L, 2529 L	OM 902.915, OM 906.921, OM 906.926	205 210	09/2006 →		4,0	24	063522310330	**MSN2049**
2533, 2533 L	OM 926.913, OM 926.921	240	10/2004 → 08/2006		4,0	24	063522310330	**MSN2049**
2628 B, 2629 B	OM 902.915, OM 906.921, OM 906.926	205 210	09/2006 →		4,0	24	063522310330	**MSN2049**
2628 K, 2629 K	OM 902.915, OM 906.921, OM 906.926	205 210	09/2006 →		4,0	24	063522310330	**MSN2049**
2628, 2629	OM 902.915, OM 906.921, OM 906.926	205 210	09/2006 →		4,0	24	063522310330	**MSN2049**
2633	OM 926.913	240	10/2004 → 08/2006		4,0	24	063522310330	**MSN2049**
2633 B	OM 926.913	240	10/2004 → 08/2006		4,0	24	063522310330	**MSN2049**
2633 K	OM 926.913	240	10/2004 → 08/2006		4,0	24	063522310330	**MSN2049**
3028 B	OM 906.921	205	03/2003 →		4,0	24	063522310330	**MSN2049**
3028 K	OM 906.921	205	03/2003 →		4,0	24	063522310330	**MSN2049**
3335	OM 457.937	260	10/2004 →		5,4	24	063524160020	**MSN2060**
3340	OM 457.937	295	10/2004 →		5,4	24	063524160020	**MSN2060**
3340 K	OM 457.937, OM 457.956, OM 457.957	295	10/2004 →		5,4	24	063524160020	**MSN2060**
3343	OM 457.937	315	10/2004 →		5,4	24	063524160020	**MSN2060**

		kW ÷ kW		i	kW	V	LONG	SHORT
MERCEDES-BENZ								
AXOR 2								
3343 B	OM 457.956, OM 457.957	315	10/2004 →		5,4	24	063524160020	**MSN2060**
CITARO (O 530)								
Citaro	OM 906.962, OM 906.963	180	04/1999 → 09/2006		4,0	24	063522310330	**MSN2049**
Citaro G	OM 906.930, OM 906.960, OM 906.961, OM 909.901, OM 909.921	205	01/1999 → 09/2004		4,0	24	063522310330	**MSN2049**
Citaro N	OM 906.931, OM 909.900, OM 909.911	170	01/1999 → 09/2004		4,0	24	063522310330	**MSN2049**
Citaro N	OM 906.930, OM 906.960, OM 906.961, OM 909.901, OM 909.921	205	01/1999 → 09/2006		4,0	24	063522310330	**MSN2049**
Citaro N	OM 906.930, OM 906.960, OM 909.901, OM 909.921	205	01/1999 → 09/2004		4,0	24	063522310330	**MSN2049**
CITO (O 520)								
177 kW	OM 904.942	130	06/1999 → 09/2003		4,0	24	063522310330	**MSN2049**
CONECTO (O 345)								
CONECTO C, H, UE	OM 906.960	205	11/2001 → 08/2007		4,0	24	063522310330	**MSN2049**
ECONIC								
1823 L, 1823 LL	OM 906.924, OM 906.940, OM 906.951	170	03/1998 → 03/2001		4,0	24	063522310330	**MSN2049**
1824 L, 1824 LL	OM 902.933	175	09/2006 →		4,0	24	063522310330	**MSN2049**
1828 L, 1828 LL	OM 906.941, OM 906.952	205	03/1998 → 03/2001		4,0	24	063522310330	**MSN2049**
1828 L, 1828 LL	M 902.903	205	09/2006 →		4,0	24	063522310330	**MSN2049**
1828 LLS		205	03/2000 → 08/2006		4,0	24	063522310330	**MSN2049**
1829 L, 1829 LL	OM 902.927	210	09/2006 →		4,0	24	063522310330	**MSN2049**
1833 L, 1833 LL	OM 926.924, OM 926.934	240	10/2006 →		4,0	24	063522310330	**MSN2049**
2628	OM 906.941, OM 906.952	205	03/1998 → 03/2001		4,0	24	063522310330	**MSN2049**
2628 LL	OM 906.941, OM 906.952	205	03/1998 → 03/2001		4,0	24	063522310330	**MSN2049**
2629 L, 2629 LL		210	09/2006 →		4,0	24	063522310330	**MSN2049**
2629 L, 2629 LL	OM 902.927	210	09/2006 →		4,0	24	063522310330	**MSN2049**
2633 L, 2633 LL	OM 926.924, OM 926.934	240	→ →		4,0	24	063522310330	**MSN2049**

		kW ÷ kW				kW	V	LONG	SHORT
MERCEDES-BENZ									
ECONIC									
2633 LL		240		03/2000 → 09/2006		4,0	24	063522310330	**MSN2049**
3233 L, 3233 LL	OM 926.934	240		09/2006 →		4,0	24	063522310330	**MSN2049**
LK/LN2									
1114 A	OM 356.916, OM 366.931, OM 366.935	96	102	02/1987 → 02/1993		4,0	24	063522310030	**MSN2042**
1114 AK	OM 356.903, OM 366.918, OM 366.931	95	100	02/1987 → 12/1998	 325961 →	4,0	24	063522310030	**MSN2042**
1114 AK	OM 356.903, OM 366.918, OM 366.931	95	100	02/1987 → 12/1998	 →325960	4,0	24	063523683090	**MSN2059**
1114 K	OM 356.904, OM 366.907, OM 366.914	95	100	03/1984 → 12/1998	 325961 →	4,0	24	063522310030	**MSN2042**
1114 K	OM 356.904, OM 366.907, OM 366.914	95	100	03/1984 → 12/1998	 →325960	4,0	24	063523683090	**MSN2059**
1114 S	OM 356.904, OM 366.907, OM 366.914	95	100	03/1984 → 12/1998	 325961 →	4,0	24	063522310030	**MSN2042**
1114 S	OM 356.904, OM 366.907, OM 366.914	95	100	03/1984 → 12/1998	 →325960	4,0	24	063523683090	**MSN2059**
1114,1114 L	OM 356.904, OM 366.907, OM 366.914, OM 366.930	95	100	03/1984 → 12/1998		4,0	24	063522310030	**MSN2042**
1114,1114 L	OM 356.904, OM 366.907, OM 366.914, OM 366.930	95	100	01/1984 → 12/1998		4,0	24	063523683090	**MSN2059**
1117 A	OM 356.947, OM 356.959, OM 357.906, OM 366.966, OM 366.975, OM 366.976	116	125	06/1987 → 12/1998		4,0	24	063522310030	**MSN2042**
1117 AK	OM 357.902, OM 357.906, OM 357.907	125		04/1984 → 12/1992		4,0	24	063522310030	**MSN2042**
1117 K	OM 357.901, OM 366.941, OM 366.953, OM 366.962	116	125	04/1984 → 12/1992		4,0	24	063522310030	**MSN2042**
1117 K	OM 904.907	125		03/1996 → 12/1998		4,0	24	063522310330	**MSN2049**
1117 LO	OM 904.907	125		03/1996 → 12/1998		4,0	24	063522310330	**MSN2049**
1117 O,1117 LO	OM 356.949, OM 357.919, OM 366.971	116	125	04/1984 → 12/1998		4,0	24	063522310030	**MSN2042**

		kW ÷ kW		i	kW	V	LONG	SHORT
MERCEDES-BENZ								
LK/LN2								
1117 S	OM 904.907	125	03/1996 → 12/1998		4,0	24	063522310330	**MSN2049**
1117 S,1117 LS	OM 357.901, OM 357.918, OM 366.941, OM 366.953, OM 366.962	116 125	03/1984 → 12/1998		4,0	24	063522310030	**MSN2042**
1117,1117 L	OM 357.901, OM 357.918, OM 366.941, OM 366.953, OM 366.962, OM 366.970	116 125	03/1984 → 12/1998		4,0	24	063522310030	**MSN2042**
1117,1117 L	OM 904.907	125	03/1996 → 12/1998		4,0	24	063522310330	**MSN2049**
1120 AF	OM 356.994, OM 356.995, OM 366.992, OM 366.994	150 155	02/1987 → 12/1998	325961 →	4,0	24	063522310030	**MSN2042**
1120 AF	OM 356.994, OM 356.995, OM 366.992, OM 366.994	150 155	02/1987 → 12/1998	→325960	4,0	24	063523683090	**MSN2059**
1120 F	OM 356.996, OM 366.992	150 155	02/1990 → 12/1998	325961 →	4,0	24	063522310030	**MSN2042**
1120 F	OM 356.996, OM 366.992	150 155	02/1990 → 12/1998	→325960	4,0	24	063523683090	**MSN2059**
1120 L	OM 366.962	125	08/1984 → 02/1993	325961 →	4,0	24	063522310030	**MSN2042**
1120 L	OM 366.962	125	08/1984 → 02/1993	→325960	4,0	24	063523683090	**MSN2059**
1120 O,1120 LO	OM 356.993, OM 357.929, OM 366.993	150 155	02/1992 → 12/1998	325961 →	4,0	24	063522310030	**MSN2042**
1120 O,1120 LO	OM 356.993, OM 357.929, OM 366.993	150 155	02/1992 → 12/1998	→325960	4,0	24	063523683090	**MSN2059**
1120 S,1120 LS	OM 356.986, OM 357.920, OM 357.927, OM 357.932, OM 366.988	148 155	06/1984 → 12/1998	325961 →	4,0	24	063522310030	**MSN2042**
1120 S,1120 LS	OM 356.986, OM 357.920, OM 357.927, OM 357.932, OM 366.988	148 155	06/1984 → 12/1998	→325960	4,0	24	063523683090	**MSN2059**
1120,1120 L	OM 356.986, OM 356.992, OM 357.920, OM 357.927, OM 357.932, OM 366.988	148 155	06/1984 → 12/1998	325961 →	4,0	24	063522310030	**MSN2042**

		kW ÷ kW			kW	V	LONG	SHORT
MERCEDES-BENZ								
LK/LN2								
1120,1120 L	OM 356.986, OM 356.992, OM 357.920, OM 357.927, OM 357.932, OM 366.988	148 155	06/1984 → 12/1998	→325960	4,0	24	063523683090	**MSN2059**
1124 AF	OM 356.983, OM 356.989, OM 356.991, OM 357.943, OM 357.944	177	03/1992 → 12/1998	325961 →	4,0	24	063522310030	**MSN2042**
1124 AF	OM 356.983, OM 356.989, OM 356.991, OM 357.943, OM 357.944	177	03/1992 → 12/1998	→325960	4,0	24	063523683090	**MSN2059**
1124 F	OM 356.979, OM 356.983, OM 357.933, OM 357.942	155 177	03/1992 → 12/1998	325961 →	4,0	24	063522310030	**MSN2042**
1124 F	OM 356.979, OM 356.983, OM 357.933, OM 357.942	155 177	03/1992 → 12/1998	→325960	4,0	24	063523683090	**MSN2059**
1217 KO	OM 357.901, OM 357.918	125	03/1994 → 12/1998	325961 →	4,0	24	063522310030	**MSN2042**
1217 KO	OM 357.901, OM 357.918	125	03/1994 → 12/1998	→325960	4,0	24	063523683090	**MSN2059**
1314	OM 356.910, OM 366.907, OM 366.914	95 100	07/1984 → 12/1998	325961 →	4,0	24	063522310030	**MSN2042**
1314	OM 356.910, OM 366.907, OM 366.914	95 100	07/1984 → 12/1998	→325960	4,0	24	063523683090	**MSN2059**
1314 AK	OM 356.909, OM 366.918, OM 366.937	95 100	06/1987 → 12/1998	325961 →	4,0	24	063522310030	**MSN2042**
1314 AK	OM 356.909, OM 366.918, OM 366.937	95 100	06/1987 → 12/1998	→325960	4,0	24	063523683090	**MSN2059**
1314 K	OM 356.909, OM 366.907, OM 366.914	95 100	07/1984 → 02/1993	325961 →	4,0	24	063522310030	**MSN2042**
1314 K	OM 356.909, OM 366.907, OM 366.914	95 100	07/1984 → 02/1993	→325960	4,0	24	063523683090	**MSN2059**

		kW ÷ kW			kW	V	LONG	SHORT
MERCEDES-BENZ								
LK/LN2								
1314 KO	OM 356.908, OM 366.936	95 100	07/1984 → 09/1995	 325961 →	4,0	24	063522310030	**MSN2042**
1314 KO	OM 356.908, OM 366.936	95 100	07/1984 → 09/1995	 →325960	4,0	24	063523683090	**MSN2059**
1317 AK	OM 356.995	155	12/1992 → 12/1998	 325961 →	4,0	24	063522310030	**MSN2042**
1317 AK	OM 356.945, OM 357.907, OM 366.944, OM 366.966	116 125	06/1987 → 12/1998	 →325960	4,0	24	063522310030	**MSN2042**
1317 AK	OM 356.945, OM 357.907, OM 366.944, OM 366.966	116 125	08/1984 → 12/1998		4,0	24	063523683090	**MSN2059**
1317 AK	OM 356.995	155	12/1992 → 12/1998	 →325960	4,0	24	063523683090	**MSN2059**
1317 K	OM 357.902, OM 357.961, OM 366.962	125	08/1984 → 02/1993		4,0	24	063522310030	**MSN2042**
1317 K	OM 904.907	125	03/1996 → 12/1998		4,0	24	063522310330	**MSN2049**
1317 KO	OM 356.944, OM 357.903, OM 357.962	116 125	03/1994 → 12/1998		4,0	24	063522310030	**MSN2042**
1317 KO	OM 904.907	125	03/1996 → 12/1998		4,0	24	063522310330	**MSN2049**
1317 LS	OM 904.907	125	03/1996 12/1998		4,0	24	063522310330	**MSN2049**
1317 S,1317 LS	OM 356.944, OM 357.902, OM 357.961, OM 366.946, OM 366.953, OM 366.962	116 125	08/1984 → 12/1998	 325961 →	4,0	24	063522310030	**MSN2042**
1317 S,1317 LS	OM 356.944, OM 357.902, OM 357.961, OM 366.946, OM 366.953, OM 366.962	116 125	08/1984 → 12/1998	 →325960	4,0	24	063523683090	**MSN2059**
1317,1317 L	OM 356.944, OM 357.902, OM 357.961, OM 366.946, OM 366.953, OM 366.962	116 125	08/1984 → 12/1998	 325961 →	4,0	24	063522310030	**MSN2042**
1317,1317 L	OM 904.907	125	03/1996 → 12/1998		4,0	24	063522310330	**MSN2049**
1317,1317 L	OM 356.944, OM 357.902, OM 357.961, OM 366.946, OM 366.953, OM 366.962	116 125	08/1984 → 12/1998	 →325960	4,0	24	063523683090	**MSN2059**

		kW ÷ kW		i	kW	V	LONG	SHORT
MERCEDES-BENZ								
LK/LN2								
1320 AK	OM 356.995	155	12/1992 → 12/1998	325961 →	4,0	24	063522310030	**MSN2042**
1320 AK	OM 356.995	155	12/1992 → 12/1998	→325960	4,0	24	063523683090	**MSN2059**
1320 L	OM 356.983	177	12/1992 → 12/1998	325961 →	4,0	24	063522310030	**MSN2042**
1320 L	OM 356.983	177	12/1992 → 12/1998	→325960	4,0	24	063523683090	**MSN2059**
1320 S,1320 LS	OM 356.992, OM 357.921, OM 357.932, OM 366.980, OM 366.988, OM 366.992, OM 366.997	148 155	10/1984 → 02/1993		4,0	24	063522310030	**MSN2042**
1320 S,1320 LS	OM 356.992, OM 357.921, OM 357.932, OM 366.980, OM 366.988, OM 366.992, OM 366.997	148 155	10/1984 → 12/1998		4,0	24	063523683090	**MSN2059**
1320,1320 L	OM 356.992, OM 357.921, OM 357.932, OM 366.980, OM 366.988, OM 366.992, OM 366.997	148 155	10/1984 → 02/1993		4,0	24	063522310030	**MSN2042**
1320,1320 L	OM 366.962, OM 366.966	125	01/1984 → 02/1993		4,0	24	063522310030	**MSN2042**
1320,1320 L	OM 356.992, OM 357.921, OM 357.932, OM 366.980, OM 366.988, OM 366.992, OM 366.997	148 155	10/1984 → 12/1998		4,0	24	063523683090	**MSN2059**
1320,1320 L	OM 366.962, OM 366.966	125	10/1984 → 02/1993		4,0	24	063523683090	**MSN2059**
1324 L	OM 366.997	150	01/1991 → 12/1998	325961 →	4,0	24	063522310030	**MSN2042**
1324 L	OM 366.997	150	01/1991 → 12/1998	→325960	4,0	24	063523683090	**MSN2059**
1324 S,1324 LS	OM 356.983, OM 357.940, OM 357.948, OM 366.999	170 177	01/1991 → 12/1998	325961 →	4,0	24	063522310030	**MSN2042**
1324 S,1324 LS	OM 356.983, OM 357.940, OM 357.948, OM 366.999	170 177	01/1991 → 12/1998	→325960	4,0	24	063523683090	**MSN2059**
1324,1324 L	OM 356.983, OM 357.940, OM 357.948, OM 366.999	170 177	01/1991 → 12/1998	325961 →	4,0	24	063522310030	**MSN2042**

		kW ÷ kW			kW	V	LONG	SHORT
MERCEDES-BENZ								
LK/LN2								
1324,1324 L	OM 356.983, OM 357.940, OM 357.948, OM 366.999	170 177	01/1991 → 12/1998	→325960	4,0	24	063523683090	**MSN2059**
1514 K	OM 356.908, OM 366.936	95 100	01/1989 → 12/1992	325961 →	4,0	24	063522310030	**MSN2042**
1514 K	OM 356.908, OM 366.936	95 100	01/1989 → 12/1992	→325960	4,0	24	063523683090	**MSN2059**
1514,1514 L	OM 356.908, OM 366.936	95 100	01/1989 → 12/1998	325961 →	4,0	24	063522310030	**MSN2042**
1514,1514 L	OM 356.908, OM 366.936	95 100	01/1989 → 12/1998	→325960	4,0	24	063523683090	**MSN2059**
1517 K	OM 356.946, OM 356.953, OM 357.903, OM 357.963, OM 366.945, OM 366.979	116 125	12/1992 → 12/1998		4,0	24	063522310030	**MSN2042**
1517 K	OM 904.907	125	03/1996 → 12/1998		4,0	24	063522310330	**MSN2049**
1517 K	OM 356.946, OM 356.953, OM 357.903, OM 357.963, OM 366.945, OM 366.979	116 125	01/1989 → 12/1998		4,0	24	063523683090	**MSN2059**
1517,1517 L	OM 356.946, OM 356.953, OM 357.903, OM 357.962, OM 357.963, OM 366.945, OM 366.979	116 125	12/1992 → 12/1998		4,0	24	063522310030	**MSN2042**
1517,1517 L	OM 904.907	125	03/1996 → 12/1998		4,0	24	063522310330	**MSN2049**
1517,1517 L	OM 356.946, OM 356.953, OM 357.903, OM 357.962, OM 357.963, OM 366.945, OM 366.979	116 125	01/1984 → 12/1998		4,0	24	063523683090	**MSN2059**
1520,1520 L	OM 356.990, OM 357.922, OM 357.930, OM 366.995	150 155	01/1989 → 12/1998	325961 →	4,0	24	063522310030	**MSN2042**
1520,1520 L	OM 357.922, OM 366.995	150 155	01/1984 → 12/1998	325961 →	4,0	24	063522310030	**MSN2042**
1520,1520 L	OM 356.990, OM 357.922, OM 357.930, OM 366.995	150 155	01/1989 → 12/1998	→325960	4,0	24	063523683090	**MSN2059**
1520,1520 L	OM 357.922, OM 366.995	150 155	01/1984 → 12/1998	→325960	4,0	24	063523683090	**MSN2059**

		kW ÷ kW		i	kW	V	LONG	SHORT
MERCEDES-BENZ								
LK/LN2								
1524,1524 L	OM 356.999, OM 357.941, OM 357.947, OM 366.999	170 177	02/1991 → 12/1998	325961 →	4,0	24	063522310030	**MSN2042**
1524,1524 L	OM 356.999, OM 357.941, OM 357.947, OM 366.999	170 177	02/1991 → 12/1998	→325960	4,0	24	063523683090	**MSN2059**
1724	OM 366.999	170	01/1991 → 12/1998	325961 →	4,0	24	063522310030	**MSN2042**
1724	OM 366.999	170	01/1991 → 12/1998	→325960	4,0	24	063523683090	**MSN2059**
2020 L	OM 366.988, OM 366.992, OM 366.995, OM 366.997	148 150	01/1984 → 12/1998	325961 →	4,0	24	063522310030	**MSN2042**
2020 L	OM 366.988, OM 366.992, OM 366.995, OM 366.997	148 150	01/1984 → 12/1998	→325960	4,0	24	063523683090	**MSN2059**
2024 L	OM 356.999, OM 357.941, OM 357.947	177	03/1994 → 12/1998	325961 →	4,0	24	063522310030	**MSN2042**
2024 L	OM 356.999, OM 357.941, OM 357.947	177	03/1994 → 12/1998	→325960	4,0	24	063523683090	**MSN2059**
709	OM 364.907, OM 364.918	63 66	03/1984 → 02/1993		4,0	24	063522310030	**MSN2042**
709	OM 364.907, OM 364.918	63 66	02/1992 → 09/1993		4,0	24	063523683090	**MSN2059**
709 K	OM 364.907, OM 364.918	63 66	03/1984 → 10/1990		4,0	24	063522310030	**MSN2042**
711	OM 354.900	77	03/1994 → 12/1998		4,0	24	063522310030	**MSN2042**
711	OM 904.905	90	03/1996 → 12/1998		4,0	24	063522310330	**MSN2049**
809	OM 364.907, OM 364.918	63 66	03/1984 → 02/1993		4,0	24	063522310030	**MSN2042**
809	OM 364.907, OM 364.918	63 66	03/1984 → 12/1998		4,0	24	063523683090	**MSN2059**
809 K	OM 364.907, OM 364.918	63 66	03/1984 → 02/1993		4,0	24	063522310030	**MSN2042**
811	OM 354.900	77	03/1994 → 12/1998	325961 →	4,0	24	063522310030	**MSN2042**
811	OM 904.905	90	03/1996 → 12/1998		4,0	24	063522310330	**MSN2049**
811	OM 354.900	77	03/1994 → 12/1998	→325960	4,0	24	063523683090	**MSN2059**
811 K	OM 354.900	77	03/1994 → 12/1998	325961 →	4,0	24	063522310030	**MSN2042**
811 K	OM 904.905	90	03/1996 → 12/1998		4,0	24	063522310330	**MSN2049**
811 K	OM 354.900	77	03/1994 → 12/1998	→325960	4,0	24	063523683090	**MSN2059**

		kW ÷ kW		i	kW	V	LONG	SHORT
MERCEDES-BENZ								
LK/LN2								
814 F	OM 354.922	103	03/1994 → 12/1998	325961 →	4,0	24	063522310030	**MSN2042**
814 F	OM 356.905, OM 356.911, OM 366.905	95 100	05/1986 → 12/1998	325961 →	4,0	24	063522310030	**MSN2042**
814 F	OM 904.906	100	03/1996 → 12/1998		4,0	24	063522310330	**MSN2049**
814 F	OM 354.922	103	03/1994 → 12/1998	→325960	4,0	24	063523683090	**MSN2059**
814 F	OM 356.905, OM 356.911, OM 366.905	95 100	05/1986 → 12/1998	→325960	4,0	24	063523683090	**MSN2059**
814 K	OM 354.920	103	03/1994 → 12/1998	325961 →	4,0	24	063522310030	**MSN2042**
814 K	OM 356.901, OM 356.902, OM 366.905, OM 366.906, OM 366.907, OM 366.910	95 100	03/1984 → 02/1993		4,0	24	063522310030	**MSN2042**
814 K	OM 904.906	100	03/1996 → 12/1998		4,0	24	063522310330	**MSN2049**
814 K	OM 354.920	103	03/1994 → 12/1998	→325960	4,0	24	063523683090	**MSN2059**
814 K	OM 356.901, OM 356.902, OM 366.905, OM 366.906, OM 366.907, OM 366.910	95 100	03/1984 → 12/1998		4,0	24	063523683090	**MSN2059**
814 LO	OM 904.906	100	03/1996 → 12/1998		4,0	24	063522310330	**MSN2049**
814 O, 814 LO	OM 356.906, OM 366.932	95 100	12/1986 → 12/1998		4,0	24	063522310030	**MSN2042**
814 O, 814 LO	OM 356.906, OM 366.932	95 100	01/1984 → 12/1998		4,0	24	063523683090	**MSN2059**
814 S	OM 354.920	103	03/1994 → 12/1998	325961 →	4,0	24	063522310030	**MSN2042**
814 S	OM 356.901, OM 356.902, OM 366.905, OM 366.906, OM 366.907, OM 366.910	95 100	03/1984 → 02/1993		4,0	24	063522310030	**MSN2042**
814 S	OM 904.906	100	03/1996 → 12/1998		4,0	24	063522310330	**MSN2049**
814 S	OM 354.920	103	03/1994 → 12/1998	→325960	4,0	24	063523683090	**MSN2059**
814 S	OM 356.901, OM 356.902, OM 366.905, OM 366.906, OM 366.907, OM 366.910	95 100	03/1984 → 12/1998		4,0	24	063523683090	**MSN2059**

		kW ÷ kW		i	kW	V	LONG	SHORT
MERCEDES-BENZ								
LK/LN2								
814,814 L	OM 354.920	103	03/1994 → 12/1998	325961 →	4,0	24	063522310030	**MSN2042**
814,814 L	OM 354.920	103	03/1994 → 12/1998	→325960	4,0	24	063523683090	**MSN2059**
814,814L	OM 356.901, OM 356.902, OM 366.905, OM 366.906, OM 366.907, OM 366.910	95 100	03/1984 → 12/1998		4,0	24	063522310030	**MSN2042**
814,814L	OM 904.906	100	03/1996 → 12/1998		4,0	24	063522310330	**MSN2049**
814,814L	OM 356.901, OM 356.902, OM 366.905, OM 366.906, OM 366.907, OM 366.910	95 100	01/1984 → 12/1998		4,0	24	063523683090	**MSN2059**
817 F	OM 356.951, OM 357.908, OM 366.967, OM 366.973	116 125	03/1984 → 12/1998		4,0	24	063522310030	**MSN2042**
817 F	OM 904.907	125	03/1996 → 12/1998		4,0	24	063522310330	**MSN2049**
817 K	OM 357.900, OM 366.943, OM 366.967	116 125	01/1986 → 12/1998		4,0	24	063522310030	**MSN2042**
817 K	OM 904.907	125	03/1996 → 12/1998		4,0	24	063522310330	**MSN2049**
817 LO	OM 904.907	125	03/1996 → 12/1998		4,0	24	063522310330	**MSN2049**
817 O, 817 LO	OM 356.948, OM 357.917, OM 366.969	116 125	01/1986 → 12/1998		4,0	24	063522310030	**MSN2042**
817 S,817 LS	OM 357.900, OM 366.942, OM 366.943, OM 366.967, OM 366.968	116 125	02/1992 → 12/1998		4,0	24	063522310030	**MSN2042**
817 S,817 LS	OM 904.907	125	03/1996 → 12/1998		4,0	24	063522310330	**MSN2049**
817 S,817 LS	OM 357.900, OM 366.942, OM 366.943, OM 366.967, OM 366.968	116 125	01/1986 → 02/1993		4,0	24	063523683090	**MSN2059**
817,817 L	OM 357.900, OM 357.916, OM 366.942, OM 366.943, OM 366.967, OM 366.968	116 125	02/1992 → 12/1998		4,0	24	063522310030	**MSN2042**
817,817 L	OM 904.907	125	03/1996 → 12/1998		4,0	24	063522310330	**MSN2049**

		kW ÷ kW		i	kW	V	LONG	SHORT
MERCEDES-BENZ								
LK/LN2								
817,817 L	OM 357.900, OM 357.916, OM 366.942, OM 366.943, OM 366.967, OM 366.968	116 125	01/1986 → 02/1993		4,0	24	063523683090	**MSN2059**
914	OM 356.901, OM 366.905, OM 366.907, OM 366.930	95 100	03/1984 → 02/1993		4,0	24	063522310030	**MSN2042**
914	OM 356.901, OM 366.905, OM 366.907, OM 366.930	95 100	03/1984 → 12/1998		4,0	24	063523683090	**MSN2059**
914 AK	OM 356.903, OM 366.918	95 100	02/1987 → 02/1993		4,0	24	063522310030	**MSN2042**
914 AK	OM 366.944, OM 366.945	125	02/1987 → 12/1998		4,0	24	063522310030	**MSN2042**
914 K	OM 356.901, OM 366.905, OM 366.907	95 100	03/1984 → 12/1998	325961 →	4,0	24	063522310030	**MSN2042**
914 K	OM 356.901, OM 366.905, OM 366.907	95 100	03/1984 → 12/1998	→325960	4,0	24	063523683090	**MSN2059**
914 KO	OM 356.901, OM 356.911, OM 366.905, OM 366.940	95 100	01/1994 → 12/1998		4,0	24	063522310030	**MSN2042**
917	OM 904.907	125	03/1996 → 12/1998		4,0	24	063522310030	**MSN2042**
917	OM 357.900	125	03/1994 → 12/1998		4,0	24	063522310030	**MSN2042**
917 AF	OM 356.941, OM 357.909, OM 357.910, OM 366.966, OM 366.974, OM 366.978	116 125	11/1992 → 12/1998		4,0	24	063522310030	**MSN2042**
917 AK	OM 357.906	125	03/1994 → 12/1998		4,0	24	063522310030	**MSN2042**
917 K	OM 357.900	125	03/1994 → 12/1998		4,0	24	063522310030	**MSN2042**
917 K	OM 904.907	125	03/1996 → 12/1998		4,0	24	063522310330	**MSN2049**
917 KO	OM 357.901, OM 357.918	125	03/1994 → 12/1998	325961 →	4,0	24	063522310030	**MSN2042**
917 KO	OM 904.907	125	03/1996 → 12/1998		4,0	24	063522310030	**MSN2042**
917 KO	OM 357.901, OM 357.918	125	03/1994 → 12/1998	→325960	4,0	24	063523683090	**MSN2059**
O 1114 ,O 1114 L	OM 356.907, OM 366.933	95 100	12/1985 → 12/1998		4,0	24	063522310030	**MSN2042**
O 1114 ,O 1114 L	OM 356.907, OM 366.933	95 100	01/1984 → 12/1998		4,0	24	063523683090	**MSN2059**

		kW ÷ kW		i	kW	V	LONG	SHORT
MERCEDES-BENZ								
LK/LN2								
O 814, O 814 L	OM 354.921	103	03/1994 → 12/1998	325961 →	4,0	24	063522310030	**MSN2042**
O 814, O 814 L	OM 354.921	103	03/1994 → 12/1998	→325960	4,0	24	063523683090	**MSN2059**
LP								
LP 1013	OM 353.904, OM 353.965, OM 353.981, OM 353.982	96	11/1976 → 12/1984		3,0	12	063523673030	**MSN2054**
LP 1113	OM 353.904, OM 353.965, OM 353.982	96	01/1980 → 12/1984		3,0	12	063523673030	**MSN2054**
LP 608, LPL 608	OM 314.910, OM 314.944, OM 314.964, OM 314.965	63	09/1973 → 10/1977		3,0	12	063523673030	**MSN2054**
LP 608, LPL 608	OM 314.910, OM 314.944, OM 314.964, OM 314.965	63	02/1974 → 10/1977		4,0	24	063523683090	**MSN2059**
LP 709, LPL 709	OM 314.910, OM 314.944, OM 314.964, OM 314.965	63	11/1977 → 12/1984		3,0	12	063523673030	**MSN2054**
LP 709, LPL 709	OM 314.910, OM 314.944, OM 314.964, OM 314.965	63	11/1977 → 05/1984		4,0	24	063523683090	**MSN2059**
LP 808, LPL 808	OM 314.910, OM 314.944, OM 314.964, OM 314.965	63	09/1973 → 10/1977		3,0	12	063523673030	**MSN2054**
LP 808, LPL 808	OM 314.910, OM 314.944, OM 314.964, OM 314.965	63	03/1974 → 10/1977		4,0	24	063523683090	**MSN2059**
LP 809, LPL 808, LPL 809	OM 314.910, OM 314.944, OM 314.964, OM 314.965	63	11/1977 → 12/1984		3,0	12	063523673030	**MSN2054**
LP 809, LPL 808, LPL 809	OM 314.910, OM 314.944, OM 314.964, OM 314.965	63	11/1977 → 05/1984		4,0	24	063523683090	**MSN2059**
LP 813, LPL 813	OM 353.904, OM 353.965, OM 353.981, OM 353.982	96	09/1973 → 12/1984		3,0	12	063523673030	**MSN2054**
LP 911 B	OM 352.907, OM 352.986	81 124	09/1973 → 03/1977		3,0	12	063523673030	**MSN2054**
LP 913, LPL 913	OM 353.904, OM 353.965, OM 353.981, OM 353.982	96	09/1973 → 12/1984		3,0	12	063523673030	**MSN2054**
LPK 1013	OM 353.904, OM 353.965, OM 353.981, OM 353.982	96	11/1976 → 12/1984		3,0	12	063523673030	**MSN2054**

		kW ÷ kW		i	kW	V	LONG	SHORT
MERCEDES-BENZ								
LP								
LPK 608	OM 314.910, OM 314.944, OM 314.964, OM 314.965	63	09/1973 → 10/1977		3,0	12	063523673030	**MSN2054**
LPK 608	OM 314.910, OM 314.944, OM 314.964, OM 314.965	63	02/1974 → 10/1977		4,0	24	063523683090	**MSN2059**
LPK 709	OM 314.910, OM 314.944, OM 314.964, OM 314.965	63	11/1977 → 12/1984		3,0	12	063523673030	**MSN2054**
LPK 709	OM 314.910, OM 314.944, OM 314.964, OM 314.965	63	11/1977 → 05/1984		4,0	24	063523683090	**MSN2059**
LPK 808	OM 314.910, OM 314.946, OM 314.964, OM 314.965	63	09/1973 → 10/1977		3,0	12	063523673030	**MSN2054**
LPK 808	OM 314.910, OM 314.946, OM 314.964, OM 314.965	63	03/1974 → 10/1977		4,0	24	063523683090	**MSN2059**
LPK 809	OM 314.910, OM 314.944, OM 314.964, OM 314.965	63	11/1977 → 12/1984		3,0	12	063523673030	**MSN2054**
LPK 809	OM 314.910, OM 314.944, OM 314.964, OM 314.965	63	11/1977 → 05/1984		4,0	24	063523683090	**MSN2059**
LPK 813	OM 353.904, OM 353.965, OM 353.981, OM 353.982	96	09/1973 → 12/1984		3,0	12	063523673030	**MSN2054**
LPK 913	OM 353.904, OM 353.965, OM 353.981, OM 353.982	96	09/1973 → 12/1984		3,0	12	063523673030	**MSN2054**
LPKF 608	OM 314.910, OM 314.944	63	09/1973 → 10/1977		3,0	12	063523673030	**MSN2054**
LPKF 608	OM 314.910, OM 314.944	63	02/1974 → 10/1977		4,0	24	063523683090	**MSN2059**
LPKF 709	OM 314.910, OM 314.944	63	11/1977 → 12/1984		3,0	12	063523673030	**MSN2054**
LPKF 709	OM 314.910, OM 314.944	63	11/1977 → 05/1984		4,0	24	063523683090	**MSN2059**
LPKF 808, LPKF 809	OM 314.910, OM 314.944	63	09/1973 → 10/1977		3,0	12	063523673030	**MSN2054**
LPKF 808, LPKF 809	OM 314.910, OM 314.944	63	03/1974 → 10/1977		4,0	24	063523683090	**MSN2059**
LPKO 608	OM 314.910, OM 314.944	63	09/1973 → 07/1977		3,0	12	063523673030	**MSN2054**

		kW ÷ kW		i	kW	V	LONG	SHORT
MERCEDES-BENZ								
LP								
LPKO 608	OM 314.910, OM 314.944	63	02/1974 → 07/1977		4,0	24	063523683090	**MSN2059**
LPO 608	OM 314.910, OM 314.944	63	09/1973 → 10/1977		3,0	12	063523673030	**MSN2054**
LPO 608	OM 314.910, OM 314.944	63	02/1974 → 10/1977		4,0	24	063523683090	**MSN2059**
LPO 709	OM 314.910, OM 314.944	63	11/1977 → 12/1984		3,0	12	063523673030	**MSN2054**
LPO 709	OM 314.910, OM 314.944	63	11/1977 → 05/1984		4,0	24	063523683090	**MSN2059**
LPO 808, LPO 809	OM 314.910, OM 314.944	63	09/1973 → 10/1977		3,0	12	063523673030	**MSN2054**
LPO 808, LPO 809	OM 314.910, OM 314.944	63	03/1974 → 10/1977		4,0	24	063523683090	**MSN2059**
LPO 811	OM 353.904, OM 353.941, OM 353.965	96	09/1973 → 12/1984		3,0	12	063523673030	**MSN2054**
LPS 608, LPLS 608	OM 314.910, OM 314.944, OM 314.964, OM 314.965	63	09/1973 → 10/1977		3,0	12	063523673030	**MSN2054**
LPS 608, LPLS 608	OM 314.910, OM 314.944, OM 314.964, OM 314.965	63	02/1974 → 10/1977		4,0	24	063523683090	**MSN2059**
LPS 709, LPLS 709	OM 314.910, OM 314.944, OM 314.964, OM 314.965	63	11/1977 → 12/1984		3,0	12	063523673030	**MSN2054**
LPS 709, LPLS 709	OM 314.910, OM 314.944, OM 314.964, OM 314.965	63	11/1977 → 05/1984		4,0	24	063523683090	**MSN2059**
LPS 813, LPLS 813	OM 353.904, OM 353.965, OM 353.981	96	09/1973 → 12/1984		3,0	12	063523673030	**MSN2054**
LPS 911 B	OM 352.907, OM 352.986	81	09/1973 → 03/1977		3,0	12	063523673030	**MSN2054**
LPS 913	OM 353.904, OM 353.965	96	09/1973 → 12/1984		3,0	12	063523673030	**MSN2054**
MB-TRAC								
1000	OM 353.985	70	12/1982 → 03/1987		3,0	12	063523673030	**MSN2054**
1000, 1100	OM 366.908, OM 366.912	74 81	03/1987 → 12/1991		3,0	12	063523673030	**MSN2054**
1100	OM 353.949	81	01/1981 → 03/1987		3,0	12	063523673030	**MSN2054**
1300 Turbo, 1400 Turbo	OM 366.958, OM 366.977	92 100	03/1987 → 12/1991		3,0	12	063523673030	**MSN2054**

		kW ÷ kW		i	kW	V	MAGNETI MARELLI LONG	MAGNETI MARELLI SHORT
MERCEDES-BENZ								
MB-TRAC								
1500	OM 353.976	110	07/1980 → 03/1987		3,0	12	063523673030	**MSN2054**
1600 Turbo	OM 366.954	115	06/1990 → 12/1991		3,0	12	063523673030	**MSN2054**
65/70, 700, 800	OM 314.956, OM 314.957	48 55	07/1973 → 12/1991		3,0	12	063523673030	**MSN2054**
700, 800	OM 364.908, OM 364.909	50 57	03/1987 → 12/1991		3,0	12	063523673030	**MSN2054**
900	OM 314.970	63	09/1981 → 03/1987		3,0	12	063523673030	**MSN2054**
900	OM 364.951	66	03/1987 → 12/1991		3,0	12	063523673030	**MSN2054**
MK								
1222	OM 441.905, OM 441.913, OM 441.923, OM 441.925	160 165	07/1989 → 08/1994		5,4	24	063524160020	**MSN2060**
1222 A, 1222 LA	OM 441.914, OM 441.926	160 165	09/1989 → 07/1994		5,4	24	063524160020	**MSN2060**
1222 AF	OM 441.915, OM 441.917, OM 441.923	160 165	09/1989 → 09/1993		5,4	24	063524160020	**MSN2060**
1222 F	OM 441.905, OM 441.913, OM 441.923, OM 441.925	160 165	07/1989 → 08/1994		5,4	24	063524160020	**MSN2060**
1222 S, 1222 LS	OM 441.905, OM 441.913, OM 441.923, OM 441.925	160 165	07/1989 → 08/1994		5,4	24	063524160020	**MSN2060**
1224 AF	OM 356.999, OM 357.946, OM 366.999	170 177	02/1993 → 09/1996		4,0	24	063523683090	**MSN2059**
1224 AF	OM 401.984	180	02/1993 → 09/1996		5,4	24	063524160020	**MSN2060**
1224 F	OM 356.999	177	02/1993 → 08/1994		4,0	24	063523683090	**MSN2059**
1226 AF	OM 401.973, OM 401.978, OM 401.984, OM 401.989	180 200	02/1993 → 09/1996		5,4	24	063524160020	**MSN2060**
1226 AF	OM 441.989	250	02/1993 → 09/1996		5,4	24	063524160020	**MSN2060**
1226 AF	OM 442.907, OM 442.914, OM 442.920, OM 442.926, OM 442.932, OM 442.933	195 218	02/1990 → 09/1993		5,4	24	063524160020	**MSN2060**
1227 A	OM 401.973, OM 401.989	200	01/1992 → 07/1992		5,4	24	063524160020	**MSN2060**
1234 AF	OM 441.989, OM 441.993, OM 445.923	250	01/1992 → 09/1996		5,4	24	063524160020	**MSN2060**

		kW ÷ kW		i	kW	V	LONG	SHORT
MERCEDES-BENZ								
MK								
1417	OM 356.940, OM 356.943, OM 357.915, OM 366.952	121 129	07/1992 → 09/1994		4,0	24	063523683090	**MSN2059**
1417 A	OM 356.943, OM 357.915, OM 366.952	121 129	01/1994 → 09/1996		4,0	24	063523683090	**MSN2059**
1417 AK	OM 356.940, OM 356.943, OM 357.915, OM 366.952	121 129	07/1992 → 09/1994		4,0	24	063523683090	**MSN2059**
1417 K	OM 356.943, OM 357.915, OM 366.952	121 125	07/1992 → 09/1994		4,0	24	063523683090	**MSN2059**
1420 AK	OM 356.987	155	08/1994 → 09/1994		4,0	24	063523683090	**MSN2059**
1420 LS	OM 356.984, OM 356.987	155	02/1990 → 06/1993		4,0	24	063523683090	**MSN2059**
1420,1420 L	OM 356.984, OM 356.987	155	02/1990 → 06/1993		4,0	24	063523683090	**MSN2059**
1422	OM 401.979	230	02/1993 → 08/1994		5,4	24	063524160020	**MSN2060**
1422 F	OM 356.999	177	03/1993 → 08/1994		4,0	24	063523683090	**MSN2059**
1422 F	OM 401.973, OM 401.975, OM 401.978, OM 401.979	180 230	02/1993 → 08/1994		5,4	24	063524160020	**MSN2060**
1422 F	OM 441.913, OM 441.925	160 165	07/1989 → 09/1993		5,4	24	063524160020	**MSN2060**
1422 LS	OM 401.973, OM 401.977	200	02/1993 → 08/1994		5,4	24	063524160020	**MSN2060**
1422 S,1422 LS	OM 441.905, OM 441.923	160 165	06/1989 → 08/1994		5,4	24	063524160020	**MSN2060**
1422,1422 L	OM 441.905, OM 441.923	160 165	06/1989 → 08/1994		5,4	24	063524160020	**MSN2060**
1424	OM 357.946	177	01/1994 → 09/1994		4,0	24	063523683090	**MSN2059**
1424 S,1424 LS	OM 445.924, OM 445.926, OM 445.938	180 200	01/1995 → 09/1996		5,4	24	063524160020	**MSN2060**
1424 S,1424 LS	OM 401.973, OM 401.975, OM 401.977, OM 401.994	180 200	02/1993 → 09/1996		5,4	24	063524160020	**MSN2060**
1424,1424 L	OM 445.924, OM 445.926, OM 445.938	180 200	01/1995 → 09/1996		5,4	24	063524160020	**MSN2060**
1424,1424 L	OM 401.973, OM 401.975, OM 401.994	180 200	02/1993 → 09/1996		5,4	24	063524160020	**MSN2060**
1426 S,1426 LS	OM 442.914, OM 442.932	191 195	06/1989 → 09/1993		5,4	24	063524160020	**MSN2060**
1427	OM 401.973	200	02/1993 → 09/1996		5,4	24	063524160020	**MSN2060**

		kW ÷ kW		i	kW	V	LONG	SHORT
MERCEDES-BENZ								
MK								
1427 F	OM 401.985, OM 401.991	200	02/1993 → 09/1996		5,4	24	063524160020	**MSN2060**
1427 F	OM 445.936	200	01/1994 → 09/1996		5,4	24	063524160020	**MSN2060**
1427 L	OM 401.973	200	02/1993 → 09/1996		5,4	24	063524160020	**MSN2060**
1427 LS	OM 445.926	200	02/1993 → 09/1996		5,4	24	063524160020	**MSN2060**
1427 S, 1427 LS	OM 401.973	200	02/1993 → 09/1996		5,4	24	063524160020	**MSN2060**
1431	OM 401.979	230	02/1993 → 08/1994		5,4	24	063524160020	**MSN2060**
1431	OM 442.907	213	12/1987 → 08/1996		5,4	24	063524160020	**MSN2060**
1431 F	OM 401.979	230	02/1993 → 08/1994		5,4	24	063524160020	**MSN2060**
1624 S	OM 401.975	180	02/1993 → 08/1994		5,4	24	063524160020	**MSN2060**
1624 S	OM 445.924	180	01/1994 → 08/1996		5,4	24	063524160020	**MSN2060**
1717 AK	OM 356.940, OM 366.952	129	09/1989 → 08/1994		4,0	24	063523683090	**MSN2059**
1717 K	OM 356.940, OM 366.952	129	09/1989 → 08/1994		4,0	24	063523683090	**MSN2059**
1717,1717 L	OM 356.940, OM 366.952	129	09/1989 → 08/1994		4,0	24	063523683090	**MSN2059**
1720 L	OM 441.916, OM 441.920, OM 441.932	151 153	12/1988 → 08/1994		5,4	24	063524160020	**MSN2060**
1720 S	OM 356.984	155	02/1990 → 08/1994		4,0	24	063523683090	**MSN2059**
1720,1720 L	OM 356.984, OM 356.985, OM 366.983	150 155	02/1990 → 08/1993		4,0	24	063523683090	**MSN2059**
1722	OM 442.907	218	12/1988 → 08/1994		5,4	24	063524160020	**MSN2060**
1722	OM 441.920	153	12/1988 → 08/1994		5,4	24	063524160020	**MSN2060**
1722 AK	OM 356.999	177	09/1989 → 08/1993		4,0	24	063523683090	**MSN2059**
1722 AK	OM 401.973, OM 401.978	200	12/1988 → 08/1994		5,4	24	063524160020	**MSN2060**
1722 AK	OM 441.914, OM 441.926, OM 441.933	151 165	12/1988 → 08/1994		5,4	24	063524160020	**MSN2060**
1722 K	OM 441.905, OM 441.913, OM 441.914, OM 441.916, OM 441.920, OM 441.923	153 165	12/1988 → 08/1994		5,4	24	063524160020	**MSN2060**
1722 K	OM 401.979	230	12/1988 → 08/1994		5,4	24	063524160020	**MSN2060**
1722 L	OM 366.983	150	09/1989 → 08/1993		4,0	24	063523683090	**MSN2059**
1722 S	OM 441.905, OM 441.913, OM 441.914, OM 441.916, OM 441.920, OM 441.923	153 165	12/1988 → 08/1994		5,4	24	063524160020	**MSN2060**

		kW ÷ kW		i	kW	V	MAGNETI MARELLI LONG	MAGNETI MARELLI SHORT
MERCEDES-BENZ								
MK								
1722, 1722 L, 1722 LL	OM 441.905, OM 441.923	160 165	12/1988 → 08/1994		5,4	24	063524160020	**MSN2060**
1722,1722 L, 1722 LL	OM 441.905, OM 441.913, OM 441.914, OM 441.916, OM 441.920, OM 441.923, OM 441.932	151 165	12/1988 → 08/1994		5,4	24	063524160020	**MSN2060**
1726 AK	OM 442.922, OM 442.935	195	06/1989 → 08/1994		5,4	24	063524160020	**MSN2060**
1726 K	OM 440.909, OM 442.914, OM 442.922, OM 442.932	195	12/1988 → 08/1994		5,4	24	063524160020	**MSN2060**
1726 L, 1726 LL	OM 441.960	250	12/1988 → 08/1994		5,4	24	063524160020	**MSN2060**
1726 LL	OM 401.973, OM 401.978	200	12/1988 → 08/1994		5,4	24	063524160020	**MSN2060**
1726 S,1726 LS	OM 442.907, OM 442.914, OM 442.922, OM 442.932	195 218	12/1988 → 08/1994		5,4	24	063524160020	**MSN2060**
1726,1726 L, 1726 LL	OM 442.906, OM 442.907, OM 442.909, OM 442.914, OM 442.922, OM 442.923, OM 442.932	195 218	12/1988 → 08/1994		5,4	24	063524160020	**MSN2060**
1727 L	OM 401.973, OM 401.978	200	12/1988 → 08/1994		5,4	24	063524160020	**MSN2060**
1729	OM 442.906, OM 442.907, OM 442.923	210 218	12/1987 → 08/1994		5,4	24	063524160020	**MSN2060**
1729 LS	OM 442.907	213	12/1987 → 08/1994		5,4	24	063524160020	**MSN2060**
1733 S,1733 LS	OM 441.960, OM 441.962, OM 441.981, OM 441.983	243 249	01/1989 → 07/1992		5,4	24	063524160020	**MSN2060**
1733,1733 L, 1734 L	OM 441.960, OM 441.962, OM 441.981, OM 441.983, OM 441.986, OM 441.989, OM 445.920, OM 445.939	243 250	01/1989 → 09/1996		5,4	24	063524160020	**MSN2060**
1820 AK	OM 356.987, OM 357.925	155	07/1993 → 09/1996		4,0	24	063523683090	**MSN2059**
1820 K	OM 356.987, OM 357.925	155	05/1992 → 09/1996		4,0	24	063523683090	**MSN2059**
1820,1820 L	OM 356.984, OM 356.987, OM 357.925	155	01/1991 → 09/1996		4,0	24	063523683090	**MSN2059**

		kW ÷ kW		i	kW	V	LONG	SHORT
MERCEDES-BENZ								
MK								
1824	OM 445.924, OM 445.938	180	01/1994 → 09/1996		5,4	24	063524160020	**MSN2060**
1824	OM 401.975	180	08/1992 → 09/1996		5,4	24	063524160020	**MSN2060**
1824 AK	OM 401.984, OM 401.990	180	08/1992 → 09/1996		5,4	24	063524160020	**MSN2060**
1824 AK	OM 445.925, OM 445.930	180 230	01/1994 → 09/1996		5,4	24	063524160020	**MSN2060**
1824 K	OM 401.975	180	08/1992 → 09/1996		5,4	24	063524160020	**MSN2060**
1824 K	OM 445.924, OM 445.938	180	01/1994 → 09/1996		5,4	24	063524160020	**MSN2060**
1824,1824 L	OM 445.924, OM 445.938, OM 445.941	180	01/1994 → 09/1996		5,4	24	063524160020	**MSN2060**
1827 AK	OM 445.933	200	01/1994 → 09/1996		5,4	24	063524160020	**MSN2060**
1827 AK	OM 401.973, OM 401.989	200	08/1992 → 09/1996		5,4	24	063524160020	**MSN2060**
1827 K	OM 445.926	200	01/1994 → 09/1996		5,4	24	063524160020	**MSN2060**
1827 S,1827 LS	OM 445.926, OM 445.936	200	01/1994 → 09/1996		5,4	24	063524160020	**MSN2060**
1827 S,1827 LS	OM 401.973, OM 401.977, OM 401.991	200	12/1990 → 09/1996		5,4	24	063524160020	**MSN2060**
1827,1827 L	OM 401.973, OM 401.977, OM 401.991	200	12/1990 → 09/1996		5,4	24	063524160020	**MSN2060**
1827,1827 L	OM 445.926, OM 445.936	200	01/1994 → 09/1996		5,4	24	063524160020	**MSN2060**
1831 K	OM 401.979	230	12/1990 → 08/1994		5,4	24	063524160020	**MSN2060**
1831 K	OM 402.987	280	12/1990 → 08/1994		5,4	24	063524160020	**MSN2060**
1831 S,1831 LS	OM 445.929, OM 445.937	230	01/1994 → 09/1996		5,4	24	063524160020	**MSN2060**
1831 S,1831 LS	OM 401.972, OM 401.979, OM 401.993	230	12/1990 → 09/1996		5,4	24	063524160020	**MSN2060**
1831,1831 L	OM 445.929, OM 445.937	230	01/1994 → 09/1996		5,4	24	063524160020	**MSN2060**
1831,1831 L	OM 401.972, OM 401.979, OM 401.993	230	12/1990 → 09/1996		5,4	24	063524160020	**MSN2060**
1834 S,1834 LS	OM 441.986, OM 441.989, OM 445.920, OM 445.939	250	01/1991 → 09/1996		5,4	24	063524160020	**MSN2060**

		kW ÷ kW		i	kW	V	LONG	SHORT
MERCEDES-BENZ								
MK								
1834,1834 L	OM 441.986, OM 441.987, OM 441.989, OM 441.991, OM 445.920, OM 445.921, OM 445.939	250	01/1991 → 09/1996		5,4	24	063524160020	**MSN2060**
1926	OM 442.914, OM 442.922, OM 442.932	195	12/1987 → 09/1996		5,4	24	063524160020	**MSN2060**
2320 L	OM 356.984, OM 356.987	155	08/1994 → 09/1996		4,0	24	063523683090	**MSN2059**
2327 L	OM 401.973	200	02/1993 → 09/1996		5,4	24	063524160020	**MSN2060**
2327 L	OM 445.926	200	01/1994 → 09/1996		5,4	24	063524160020	**MSN2060**
2420,2420 L	OM 356.984, OM 366.983	150 155	03/1990 → 08/1994		4,0	24	063523683090	**MSN2059**
2422	OM 441.923	160	09/1989 → 08/1994		5,4	24	063524160020	**MSN2060**
2422 , 2422 L	OM 441.905, OM 441.923	160 165	09/1989 → 08/1994		5,4	24	063524160020	**MSN2060**
2422 B	OM 441.912, OM 441.924	160 165	09/1989 → 08/1994		5,4	24	063524160020	**MSN2060**
2422 K	OM 441.905, OM 441.912, OM 441.923, OM 441.924	160 165	09/1989 → 08/1994		5,4	24	063524160020	**MSN2060**
2422 L	OM 441.920	153	09/1989 → 08/1994		5,4	24	063524160020	**MSN2060**
2422 L	OM 441.905, OM 441.923	160 170	09/1989 → 08/1994		5,4	24	063524160020	**MSN2060**
2422, 2422 L	OM 441.916, OM 441.920, OM 441.932	151 153	09/1989 → 08/1994		5,4	24	063524160020	**MSN2060**
2422,2422 L	OM 441.905, OM 441.920, OM 441.923, OM 441.924	153 165	09/1989 → 08/1994		5,4	24	063524160020	**MSN2060**
2426	OM 442.914, OM 442.922, OM 442.932	195	01/1990 → 08/1994		5,4	24	063524160020	**MSN2060**
2426	OM 442.914, OM 442.921, OM 442.932, OM 442.934	195	01/1990 → 08/1994		5,4	24	063524160020	**MSN2060**
2426 B	OM 442.921	195	02/1990 → 08/1994		5,4	24	063524160020	**MSN2060**
2426 L	OM 442.914, OM 442.932	195	01/1990 → 08/1994		5,4	24	063524160020	**MSN2060**
2426 L	OM 441.960	250	02/1990 → 08/1994		5,4	24	063524160020	**MSN2060**
2426 L	OM 401.973, OM 401.979	200 230	02/1990 → 08/1994		5,4	24	063524160020	**MSN2060**

		kW ÷ kW		i	kW	V	LONG	SHORT
MERCEDES-BENZ								
MK								
2426, 2426 L	OM 442.914, OM 442.922, OM 442.932	195	02/1990 → 08/1994		5,4	24	063524160020	**MSN2060**
2427 B	OM 401.977, OM 401.978	200	07/1992 → 08/1994		5,4	24	063524160020	**MSN2060**
2427 L	OM 401.973, OM 401.977	200	07/1992 → 09/1996		5,4	24	063524160020	**MSN2060**
2431	OM 401.972, OM 401.979, OM 401.993	230	12/1987 → 09/1996		5,4	24	063524160020	**MSN2060**
2433 K	OM 441.960, OM 441.981	249	09/1989 → 07/1992		5,4	24	063524160020	**MSN2060**
2433 L	OM 441.960	243	05/1989 → 07/1992		5,4	24	063524160020	**MSN2060**
2433 S	OM 441.960, OM 441.981, OM 441.986, OM 441.989	243 250	09/1989 → 07/1992		5,4	24	063524160020	**MSN2060**
2433 S,2433 LS	OM 441.960, OM 441.962, OM 441.981, OM 441.983	243 249	05/1989 → 07/1992		5,4	24	063524160020	**MSN2060**
2433,2433 L, 2434 L	OM 441.960, OM 441.962, OM 441.981, OM 441.983, OM 441.986, OM 441.989, OM 445.920, OM 445.939	243 250	05/1989 → 09/1996		5,4	24	063524160020	**MSN2060**
2524	OM 445.924	180	01/1994 → 09/1996		5,4	24	063524160020	**MSN2060**
2524 K	OM 445.924	180	01/1994 → 09/1996		5,4	24	063524160020	**MSN2060**
2524 L	OM 445.924, OM 445.938, OM 445.941	180	01/1994 → 09/1996		5,4	24	063524160020	**MSN2060**
2524,2524 L	OM 445.924	180	01/1994 → 09/1996		5,4	24	063524160020	**MSN2060**
2527	OM 401.973	200	10/1993 → 09/1996		5,4	24	063524160020	**MSN2060**
2527	OM 445.926	200	01/1994 → 09/1996		5,4	24	063524160020	**MSN2060**
2527 B	OM 445.927	200	01/1994 → 09/1996		5,4	24	063524160020	**MSN2060**
2527 K	OM 401.973	200	10/1993 → 09/1996		5,4	24	063524160020	**MSN2060**
2527 K	OM 445.926	200	01/1994 → 09/1996		5,4	24	063524160020	**MSN2060**
2527 L	OM 445.926, OM 445.936	200	01/1994 → 09/1996		5,4	24	063524160020	**MSN2060**
2527 L	OM 442.914	195	03/1991 → 08/1994		5,4	24	063524160020	**MSN2060**
2527 L	OM 445.926, OM 445.929, OM 445.936, OM 445.940	200 230	01/1994 → 09/1996		5,4	24	063524160020	**MSN2060**

		kW ÷ kW		i	kW	V	LONG	SHORT
MERCEDES-BENZ								
MK								
2527 L	OM 401.973, OM 401.977, OM 401.991	200	10/1993 → 09/1996		5,4	24	063524160020	**MSN2060**
2527 L	OM 401.973, OM 401.977, OM 401.979	200 230	10/1993 → 09/1996		5,4	24	063524160020	**MSN2060**
2531 B	OM 401.979	230	12/1990 → 09/1996		5,4	24	063524160020	**MSN2060**
2531 L	OM 401.979	230	12/1990 → 09/1996		5,4	24	063524160020	**MSN2060**
2531 L	OM 401.972, OM 401.979, OM 401.993	230	12/1990 → 09/1996		5,4	24	063524160020	**MSN2060**
2531 L	OM 445.929, OM 445.937	230	01/1994 → 09/1996		5,4	24	063524160020	**MSN2060**
2531,2531 L	OM 445.929, OM 445.937	230	01/1994 → 09/1996		5,4	24	063524160020	**MSN2060**
2531,2531 L	OM 401.972, OM 401.979, OM 401.993	230	12/1990 → 09/1996		5,4	24	063524160020	**MSN2060**
2534 K	OM 441.986, OM 441.989, OM 445.920	250	01/1991 → 09/1996		5,4	24	063524160020	**MSN2060**
2534 L	OM 445.920	250	01/1994 → 09/1996		5,4	24	063524160020	**MSN2060**
2534 S,2534 LS	OM 441.986, OM 441.987, OM 445.920, OM 445.921, OM 445.922	250	01/1994 → 09/1996		5,4	24	063524160020	**MSN2060**
2534,2534 L	OM 441.986, OM 441.987, OM 441.989, OM 441.991, OM 445.920, OM 445.921, OM 445.922	250	01/1991 → 09/1996		5,4	24	063524160020	**MSN2060**
3231 L	OM 401.972, OM 401.979, OM 401.993	230	12/1990 → 08/1996		5,4	24	063524160020	**MSN2060**
3231 L	OM 445.929	230	01/1994 → 08/1996		5,4	24	063524160020	**MSN2060**
NG								
1013	OM 353.942, OM 353.943	96	02/1976 → 12/1984		3,0	12	063523673030	**MSN2054**
1013 A	OM 353.942, OM 353.943	96	02/1976 → 12/1986		3,0	12	063523673030	**MSN2054**
1013 AK	OM 353.942, OM 353.943, OM 353.945, OM 353.946	96	02/1976 → 12/1984		3,0	12	063523673030	**MSN2054**

		kW ÷ kW		i	kW	V	LONG	SHORT
MERCEDES-BENZ								
NG								
1013 K	OM 353.942, OM 353.943, OM 353.945, OM 353.946	96	02/1976 → 12/1984		3,0	12	063523673030	**MSN2054**
1013 KO	OM 353.943, OM 353.945, OM 353.946	96	02/1976 → 12/1984		3,0	12	063523673030	**MSN2054**
1013 S	OM 353.942, OM 353.943, OM 353.946	96	02/1976 → 12/1984		3,0	12	063523673030	**MSN2054**
1017	OM 353.950, OM 353.952, OM 353.953, OM 353.975	124	11/1975 → 02/1991		3,0	12	063523673030	**MSN2054**
1017	OM 353.950, OM 353.952, OM 353.953, OM 353.975	124	11/1975 → 02/1991		4,0	24	063523683090	**MSN2059**
1017 A	OM 353.950, OM 353.952, OM 353.953	124	11/1975 → 02/1991		3,0	12	063523673030	**MSN2054**
1017 A	OM 353.950, OM 353.952, OM 353.953	124	11/1975 → 02/1991		4,0	24	063523683090	**MSN2059**
1017 AF	OM 353.954	124	11/1975 → 05/1984		4,0	24	063523683090	**MSN2059**
1017 AK	OM 353.950	124	02/1976 → 12/1984		3,0	12	063523673030	**MSN2054**
1017 AS	OM 353.950	124	04/1977 → 09/1985		3,0	12	063523673030	**MSN2054**
1017 AS	OM 353.950	124	08/1979 → 05/1984		4,0	24	063523683090	**MSN2059**
1017 K	OM 353.950	124	02/1976 → 12/1984		3,0	12	063523673030	**MSN2054**
1017 K	OM 353.950	124	08/1979 → 05/1984		4,0	24	063523683090	**MSN2059**
1017 KO,1017 F	OM 353.952, OM 353.953, OM 353.954	124	11/1975 → 12/1984		3,0	12	063523673030	**MSN2054**
1017 KO,1017 F	OM 353.952, OM 353.953, OM 353.954	124	11/1975 → 05/1984		4,0	24	063523683090	**MSN2059**
1017 S,1017 LS	OM 353.970, OM 353.971	124	04/1977 → 09/1985		3,0	12	063523673030	**MSN2054**
1213	OM 353.943, OM 353.944, OM 353.945, OM 353.946	96	09/1975 → 05/1986		3,0	12	063523673030	**MSN2054**
1213 A	OM 353.943, OM 353.944, OM 353.945, OM 353.946	96	09/1975 → 05/1986		3,0	12	063523673030	**MSN2054**
1213 AK	OM 353.943, OM 353.944, OM 353.945, OM 353.946	96	09/1975 → 05/1986		3,0	12	063523673030	**MSN2054**

		kW ÷ kW		i	kW	V	LONG	SHORT
MERCEDES-BENZ								
NG								
1213 AKO	OM 353.944, OM 353.946	96	09/1975 → 05/1986		3,0	12	063523673030	**MSN2054**
1213 AS	OM 353.943, OM 353.944, OM 353.945, OM 353.946	96	09/1975 → 05/1986		3,0	12	063523673030	**MSN2054**
1213 K	OM 353.943, OM 353.944, OM 353.945, OM 353.946	96	09/1975 → 05/1986		3,0	12	063523673030	**MSN2054**
1213 KO	OM 353.944, OM 353.946	96	09/1975 → 05/1986		3,0	12	063523673030	**MSN2054**
1213 S	OM 353.943, OM 353.944, OM 353.945, OM 353.946	96	09/1975 → 05/1986		3,0	12	063523673030	**MSN2054**
1217 A	OM 353.950, OM 353.951, OM 353.952, OM 353.953	124	09/1975 → 09/1985		3,0	12	063523673030	**MSN2054**
1217 AK	OM 353.950, OM 353.951	124	09/1975 → 09/1985		3,0	12	063523673030	**MSN2054**
1217 AS	OM 353.950, OM 353.951, OM 353.952, OM 353.953	124	09/1975 → 09/1985		3,0	12	063523673030	**MSN2054**
1217 K	OM 353.950, OM 353.951	124	09/1975 → 12/1984		3,0	12	063523673030	**MSN2054**
1217 KO	OM 353.950, OM 353.951, OM 353.953	124	09/1975 → 09/1985		3,0	12	063523673030	**MSN2054**
1217 S,1217 LS	OM 353.950, OM 353.951, OM 353.952, OM 353.953	124	09/1975 → 09/1985		3,0	12	063523673030	**MSN2054**
1217,1217 L	OM 353.950, OM 353.951, OM 353.952, OM 353.953, OM 353.970, OM 353.971	124	10/1976 → 09/1985		3,0	12	063523673030	**MSN2054**
1219	OM 401.914, OM 401.915	141	03/1977 → 09/1984		5,4	24	063524160020	**MSN2060**
1219 A	OM 401.905, OM 401.906	141	03/1977 → 12/1982		5,4	24	063524160020	**MSN2060**
1219 AF	OM 401.919	141	03/1977 → 09/1984		5,4	24	063524160020	**MSN2060**
1219 AK	OM 401.905	141	03/1977 → 12/1982		5,4	24	063524160020	**MSN2060**
1219 F	OM 401.918	141	03/1977 → 09/1984		5,4	24	063524160020	**MSN2060**
1219 K	OM 401.905, OM 401.906	141	03/1977 → 09/1984		5,4	24	063524160020	**MSN2060**

		kW ÷ kW		i	kW	V	LONG	SHORT
MERCEDES-BENZ								
NG								
1219 S	OM 401.914, OM 401.915	141	03/1977 → 09/1984		5,4	24	063524160020	**MSN2060**
1222	OM 421.905, OM 421.909	159	07/1982 → 02/1990		5,4	24	063524160020	**MSN2060**
1222 A	OM 421.905, OM 421.909	159	05/1982 → 10/1990		5,4	24	063524160020	**MSN2060**
1222 AF	OM 421.906	159	05/1982 → 12/1991		5,4	24	063524160020	**MSN2060**
1222 F	OM 421.906	159	05/1982 → 12/1991		5,4	24	063524160020	**MSN2060**
1222 S	OM 421.905	159	07/1982 → 02/1990		5,4	24	063524160020	**MSN2060**
1413	OM 353.944, OM 353.946	96	09/1975 → 12/1984		3,0	12	063523673030	**MSN2054**
1413 A	OM 353.944, OM 353.946, OM 353.964	96	09/1975 → 12/1984		3,0	12	063523673030	**MSN2054**
1413 AK	OM 353.944, OM 353.946, OM 353.964	96	09/1975 → 12/1984		3,0	12	063523673030	**MSN2054**
1413 AKO	OM 353.944, OM 353.946, OM 353.964	96	09/1975 → 12/1984		3,0	12	063523673030	**MSN2054**
1413 K	OM 353.944, OM 353.946, OM 353.964	96	09/1975 → 12/1984		3,0	12	063523673030	**MSN2054**
1413 KO	OM 353.944, OM 353.946, OM 353.964	96	09/1975 → 12/1984		3,0	12	063523673030	**MSN2054**
1414	OM 366.906, OM 366.909	100	03/1987 → 03/1991		4,0	24	063523683090	**MSN2059**
1414 K	OM 366.906, OM 366.909	100	03/1987 → 03/1991		4,0	24	063523683090	**MSN2059**
1417	OM 353.951, OM 353.971	124	05/1975 → 12/1984		3,0	12	063523673030	**MSN2054**
1417 A	OM 353.951, OM 353.971	124	05/1975 → 12/1984		3,0	12	063523673030	**MSN2054**
1417 AK	OM 353.951, OM 353.971	124	05/1975 → 12/1984		3,0	12	063523673030	**MSN2054**
1417 AKO	OM 353.953	124	05/1975 → 12/1984		3,0	12	063523673030	**MSN2054**
1417 C	OM 366.951, OM 366.952	125	03/1987 → 03/1991		4,0	24	063523683090	**MSN2059**
1417 CA	OM 366.951, OM 366.952	125	03/1987 → 03/1991		4,0	24	063523683090	**MSN2059**
1417 CAK	OM 366.951, OM 366.952	125	03/1987 → 03/1991		4,0	24	063523683090	**MSN2059**

		kW ÷ kW		i	kW	V	LONG	SHORT
MERCEDES-BENZ								
NG								
1417 CK	OM 366.951, OM 366.952	125	03/1987 → 03/1991		4,0	24	063523683090	**MSN2059**
1417 K	OM 353.951, OM 353.971	124	05/1975 → 12/1984		3,0	12	063523673030	**MSN2054**
1417 KO	OM 353.951, OM 353.971	124	05/1975 → 12/1984		3,0	12	063523673030	**MSN2054**
1419 AK	OM 401.905	141	03/1977 → 12/1982		5,4	24	063524160020	**MSN2060**
1419 AS	OM 401.914	141	03/1977 → 12/1982		5,4	24	063524160020	**MSN2060**
1419 C,1419 CL	OM 362.906, OM 362.909	141	05/1983 → 03/1984		4,0	24	063523683090	**MSN2059**
1419 F	OM 401.914, OM 401.919	141	03/1977 → 12/1982		5,4	24	063524160020	**MSN2060**
1419 K	OM 401.905	141	03/1977 → 12/1982		5,4	24	063524160020	**MSN2060**
1419 S,1419 LS	OM 401.905	141	03/1977 → 12/1982		5,4	24	063524160020	**MSN2060**
1419,1419 L	OM 401.914	141	03/1977 → 01/1987		5,4	24	063524160020	**MSN2060**
1420 LS	OM 366.983	150	03/1987 → 03/1991		4,0	24	063523683090	**MSN2059**
1420,1420 L	OM 366.983	150	03/1987 → 03/1991		4,0	24	063523683090	**MSN2059**
1422 F	OM 421.906	159	05/1982 → 10/1990		5,4	24	063524160020	**MSN2060**
1422 S, 1422 LS	OM 421.905	159	05/1982 → 10/1990		5,4	24	063524160020	**MSN2060**
1422,1422 L	OM 421.905	159	05/1982 → 10/1990		5,4	24	063524160020	**MSN2060**
1424 F	OM 402.919	176	03/1977 → 01/1987		5,4	24	063524160020	**MSN2060**
1424 K	OM 402.910, OM 402.911	176	03/1977 → 01/1987		5,4	24	063524160020	**MSN2060**
1424 S,1424 LS	OM 402.910, OM 402.911	176	03/1977 → 01/1987		5,4	24	063524160020	**MSN2060**
1424,1424 L	OM 402.910, OM 402.911	176	03/1977 → 01/1987		5,4	24	063524160020	**MSN2060**
1425 S,1425 LS	OM 422.909	184	11/1982 → 03/1991		5,4	24	063524160020	**MSN2060**
1428 F	OM 422.907, OM 422.913	206	05/1982 → 12/1991		5,4	24	063524160020	**MSN2060**
1428AF	OM 422.913	206	08/1973 → 09/1996		5,4	24	063524160020	**MSN2060**
1613 K	OM 353.944, OM 353.946	96	01/1975 → 12/1984		3,0	12	063523673030	**MSN2054**
1613 KO	OM 353.944, OM 353.946	96	01/1975 → 12/1984		3,0	12	063523673030	**MSN2054**
1613,1613 L	OM 353.944, OM 353.946	96	01/1975 → 12/1984		3,0	12	063523673030	**MSN2054**
1614	OM 366.906	100	03/1987 → 03/1991		4,0	24	063523683090	**MSN2059**
1614 K	OM 366.909	100	03/1987 → 03/1991		4,0	24	063523683090	**MSN2059**
1617 AK	OM 353.951, OM 353.953, OM 353.971	124	01/1975 → 07/1985		3,0	12	063523673030	**MSN2054**
1617 C,1617 CL	OM 366.951, OM 366.952	125	03/1987 → 03/1991		4,0	24	063523683090	**MSN2059**

		kW ÷ kW		i	kW	V	LONG	SHORT
MERCEDES-BENZ								
NG								
1617 CAK	OM 366.951, OM 366.952	125	03/1987 → 03/1991		4,0	24	063523683090	**MSN2059**
1617 CK	OM 366.951	125	03/1987 → 03/1991		4,0	24	063523683090	**MSN2059**
1617 CS	OM 366.951	125	03/1987 → 03/1991		4,0	24	063523683090	**MSN2059**
1617 K	OM 353.951, OM 353.953, OM 353.971	124	01/1975 → 07/1985		3,0	12	063523673030	**MSN2054**
1617 KO	OM 353.951, OM 353.953	124	01/1975 → 07/1985		3,0	12	063523673030	**MSN2054**
1617 S	OM 353.951, OM 353.953	124	01/1975 → 07/1985		3,0	12	063523673030	**MSN2054**
1617,1617 L	OM 353.951, OM 353.953	124	01/1975 → 07/1985		3,0	12	063523673030	**MSN2054**
1619 AK	OM 401.905	141	03/1977 → 12/1982		5,4	24	063524160020	**MSN2060**
1619 C,1619 CL	OM 362.906, OM 362.909	141	06/1983 → 05/1984		4,0	24	063523683090	**MSN2059**
1619 K	OM 401.905	141	03/1977 → 12/1982		5,4	24	063524160020	**MSN2060**
1619 KO	OM 401.905, OM 401.914	141	03/1977 → 01/1987		5,4	24	063524160020	**MSN2060**
1619 S	OM 401.905, OM 401.914	141	03/1977 → 12/1982		5,4	24	063524160020	**MSN2060**
1619,1619 L	OM 401.905, OM 401.914	141	02/1977 → 05/1987		5,4	24	063524160020	**MSN2060**
1620,1620 L	OM 366.983	150	03/1987 → 03/1991		4,0	24	063523683090	**MSN2059**
1622 AK	OM 421.905	159	05/1982 → 10/1989		5,4	24	063524160020	**MSN2060**
1622 K	OM 421.905	159	05/1982 → 10/1989		5,4	24	063524160020	**MSN2060**
1622 S	OM 421.905	159	05/1982 → 03/1991		5,4	24	063524160020	**MSN2060**
1622,1622 L	OM 421.905, OM 441.906, OM 441.907	150 159	08/1973 → 09/1996		5,4	24	063524160020	**MSN2060**
1624 K	OM 402.910	176	03/1977 → 08/1982		5,4	24	063524160020	**MSN2060**
1624 S,1624 LS	OM 402.911	176	03/1977 → 12/1982		5,4	24	063524160020	**MSN2060**
1624,1624 L	OM 402.911, OM 402.923	176	02/1977 → 01/1987		5,4	24	063524160020	**MSN2060**
1625 AK	OM 422.909	184	10/1980 → 11/1989		5,4	24	063524160020	**MSN2060**
1625 K	OM 422.909	184	05/1980 → 11/1989		5,4	24	063524160020	**MSN2060**
1625 S,1625 LS	OM 422.909	184	08/1973 → 09/1996		5,4	24	063524160020	**MSN2060**
1625,1625 L	OM 422.909	184	08/1973 → 09/1996		5,4	24	063524160020	**MSN2060**
1626 AK	OM 402.906	188	03/1977 → 12/1980		5,4	24	063524160020	**MSN2060**
1626 AS	OM 402.906, OM 402.912	188	03/1977 → 12/1980		5,4	24	063524160020	**MSN2060**
1626 K	OM 402.906	188	03/1977 → 12/1980		5,4	24	063524160020	**MSN2060**

		kW ÷ kW		i	kW	V	LONG	SHORT
MERCEDES-BENZ								
NG								
1626 S,1626 LS	OM 402.906, OM 402.912, OM 402.916	188	03/1977 → 12/1980		5,4	24	063524160020	**MSN2060**
1626,1626 L	OM 402.912	188	03/1977 → 12/1980		5,4	24	063524160020	**MSN2060**
1628 A	OM 422.905, OM 422.906, OM 422.911	206	01/1980 → 05/1989		5,4	24	063524160020	**MSN2060**
1628 S,1628 LS	OM 422.905, OM 422.906, OM 422.911	206	08/1973 → 09/1996		5,4	24	063524160020	**MSN2060**
1628,1628 L	OM 422.905, OM 422.906, OM 422.911, OM 422.913	206	08/1973 → 09/1996		5,4	24	063524160020	**MSN2060**
1635 K	OM 442.950, OM 442.952	260	02/1986 → 07/1989		5,4	24	063524160020	**MSN2060**
1635 S,1635 LS	OM 442.950, OM 442.952	260	02/1986 → 07/1989		5,4	24	063524160020	**MSN2060**
1635,1635 L	OM 442.950, OM 442.952	260	02/1986 → 07/1989		5,4	24	063524160020	**MSN2060**
1644	OM 442.951, OM 442.953, OM 442.980	320	06/1986 → 08/1989		5,4	24	063524160020	**MSN2060**
1644 S,1644 LS	OM 442.951, OM 442.953, OM 442.980	320	06/1986 → 08/1989		5,4	24	063524160020	**MSN2060**
1719	OM 401.909, OM 401.916	141	03/1977 → 08/1982		5,4	24	063524160020	**MSN2060**
1719 AK	OM 401.909	141	03/1977 → 08/1982		5,4	24	063524160020	**MSN2060**
1719 K	OM 401.909	141	03/1977 → 08/1982		5,4	24	063524160020	**MSN2060**
1719 S	OM 401.909, OM 401.916	141	03/1977 → 08/1982		5,4	24	063524160020	**MSN2060**
1919	OM 401.909, OM 401.916	141	03/1977 → 08/1982		5,4	24	063524160020	**MSN2060**
1919 AK	OM 401.909	141	03/1977 → 08/1982		5,4	24	063524160020	**MSN2060**
1919 K	OM 401.909	141	03/1977 → 08/1982		5,4	24	063524160020	**MSN2060**
1919 S	OM 401.909, OM 401.916	141	03/1977 → 08/1982		5,4	24	063524160020	**MSN2060**
1922	OM 421.905	159	10/1981 → 10/1990		5,4	24	063524160020	**MSN2060**
1922 AK	OM 421.905	159	10/1981 → 03/1991		5,4	24	063524160020	**MSN2060**
1922 K	OM 421.905	159	10/1981 → 03/1991		5,4	24	063524160020	**MSN2060**
1922 S	OM 421.905	159	10/1981 → 03/1991		5,4	24	063524160020	**MSN2060**
1926	OM 402.906, OM 402.912	188	03/1977 → 12/1980		5,4	24	063524160020	**MSN2060**

		kW ÷ kW		i	kW	V	LONG	SHORT
MERCEDES-BENZ								
NG								
1926 A	OM 402.906, OM 402.912	188	03/1977 → 12/1980		5,4	24	063524160020	**MSN2060**
1926 AK	OM 402.906, OM 402.912	188	03/1977 → 12/1980		5,4	24	063524160020	**MSN2060**
1926 AS	OM 402.906, OM 402.912	188	03/1977 → 12/1980		5,4	24	063524160020	**MSN2060**
1926 K	OM 402.906, OM 402.912	188	03/1977 → 12/1980		5,4	24	063524160020	**MSN2060**
1926 S,1926 LS	OM 402.906, OM 402.912, OM 402.916	188	03/1977 → 12/1980		5,4	24	063524160020	**MSN2060**
1928 A	OM 422.905, OM 422.907, OM 422.911, OM 422.913	206	01/1980 → 03/1991		5,4	24	063524160020	**MSN2060**
1928 AK	OM 422.905, OM 422.907, OM 422.911, OM 422.913	206	01/1980 → 03/1991		5,4	24	063524160020	**MSN2060**
1928 AS	OM 422.913	206	01/1980 → 03/1991		5,4	24	063524160020	**MSN2060**
1928 K	OM 422.905, OM 422.907, OM 422.911, OM 422.913	206	01/1980 → 03/1991		5,4	24	063524160020	**MSN2060**
1928 S,1928 LS	OM 422.906, OM 422.911	206	08/1973 → 09/1996		5,4	24	063524160020	**MSN2060**
1928,1928 L	OM 422.905, OM 422.906, OM 422.907, OM 422.911, OM 422.913	206	08/1973 → 09/1996		5,4	24	063524160020	**MSN2060**
1935	OM 442.950, OM 442.952	260	02/1986 → 09/1989		5,4	24	063524160020	**MSN2060**
1935 AK	OM 442.962	260 269	09/1987 → 03/1991		5,4	24	063524160020	**MSN2060**
1935 AS	OM 442.962	260 269	09/1987 → 03/1991		5,4	24	063524160020	**MSN2060**
1935 S,1935 LS	OM 442.950, OM 442.952	260	02/1986 → 09/1989		5,4	24	063524160020	**MSN2060**
1944	OM 442.951	320	10/1985 → 12/1989		5,4	24	063524160020	**MSN2060**
1944 S,1944 LS	OM 442.951	320	10/1985 → 12/1989		5,4	24	063524160020	**MSN2060**
2025 S	OM 422.909	184	08/1983 → 03/1991		5,4	24	063524160020	**MSN2060**
2026 S	OM 402.912, OM 402.916	188	03/1977 → 10/1980		5,4	24	063524160020	**MSN2060**
2028 A	OM 422.907, OM 422.911, OM 422.913, OM 422.916	206	01/1980 → 06/1989		5,4	24	063524160020	**MSN2060**
2028 LS	OM 422.905, OM 422.906, OM 422.910, OM 422.911	206	01/1980 → 06/1989		5,4	24	063524160020	**MSN2060**

		kW ÷ kW		i	kW	V	LONG	SHORT
MERCEDES-BENZ								
NG								
2035 S,2035 LS	OM 442.950, OM 442.952, OM 442.958	260	06/1986 → 07/1989		5,4	24	063524160020	**MSN2060**
2219	OM 401.926	141	03/1977 → 01/1987		5,4	24	063524160020	**MSN2060**
2219 C,2219 CL	OM 362.906, OM 362.909	141	02/1983 → 05/1984		4,0	24	063523683090	**MSN2059**
2219 K	OM 401.925	141	03/1977 → 01/1987		5,4	24	063524160020	**MSN2060**
2219 KO	OM 401.914, OM 401.926	141	03/1977 → 01/1987		5,4	24	063524160020	**MSN2060**
2219,2219 L	OM 401.923, OM 401.926, OM 401.927	141	03/1977 → 01/1987		5,4	24	063524160020	**MSN2060**
2220,2220 L	OM 366.983	150	03/1987 → 03/1991		4,0	24	063523683090	**MSN2059**
2222	OM 421.905	159	05/1982 → 03/1991		5,4	24	063524160020	**MSN2060**
2222 B	OM 421.905, OM 421.907, OM 441.906	150 159	05/1982 → 03/1991		5,4	24	063524160020	**MSN2060**
2222 K	OM 421.905	159	05/1982 → 10/1989		5,4	24	063524160020	**MSN2060**
2222 K	OM 421.905	159	05/1982 → 03/1991		5,4	24	063524160020	**MSN2060**
2222 L	OM 421.905, OM 441.905, OM 441.917	159 165	08/1973 → 09/1996		5,4	24	063524160020	**MSN2060**
2222,2222 L	OM 421.905	159	08/1973 → 09/1996		5,4	24	063524160020	**MSN2060**
2224	OM 402.911, OM 402.928	176	03/1977 → 12/1982		5,4	24	063524160020	**MSN2060**
2224 B	OM 402.914	176	03/1977 → 03/1984		5,4	24	063524160020	**MSN2060**
2224 K	OM 402.910, OM 402.927	176	03/1977 → 12/1982		5,4	24	063524160020	**MSN2060**
2224 S	OM 402.911, OM 402.928	176	03/1977 → 12/1982		5,4	24	063524160020	**MSN2060**
2225	OM 422.909	184	09/1985 → 06/1989		5,4	24	063524160020	**MSN2060**
2225	OM 422.909	184	04/1985 → 03/1991		5,4	24	063524160020	**MSN2060**
2225 B	OM 422.912	184	08/1983 → 03/1991		5,4	24	063524160020	**MSN2060**
2225 L	OM 422.909	184	04/1985 → 03/1991		5,4	24	063524160020	**MSN2060**
2226	OM 402.912, OM 402.916, OM 402.924	188	03/1977 → 12/1980		5,4	24	063524160020	**MSN2060**
2226 S,2226 LS	OM 402.912, OM 402.916, OM 402.924	188	03/1977 → 12/1980		5,4	24	063524160020	**MSN2060**
2226,2226 L	OM 402.912, OM 402.916, OM 402.924	188	03/1977 → 12/1980		5,4	24	063524160020	**MSN2060**

		kW ÷ kW		i	kW	V	LONG	SHORT
MERCEDES-BENZ								
NG								
2228	OM 422.905, OM 422.911	206	12/1979 → 03/1991		5,4	24	063524160020	**MSN2060**
2228 S	OM 422.905, OM 422.911	206	12/1979 → 03/1991		5,4	24	063524160020	**MSN2060**
2228,2228 L	OM 422.905, OM 422.906, OM 422.911	206	08/1973 → 09/1996		5,4	24	063524160020	**MSN2060**
2235 K	OM 442.950	260	03/1986 → 07/1989		5,4	24	063524160020	**MSN2060**
2235 S, 2235 LS	OM 442.950	260	03/1986 → 07/1989		5,4	24	063524160020	**MSN2060**
2235,2235 L	OM 442.950	260	03/1986 → 07/1989		5,4	24	063524160020	**MSN2060**
2238,2238 L	OM 422.953, OM 422.955, OM 422.959	276	08/1973 → 09/1996		5,4	24	063524160020	**MSN2060**
2244 S	OM 442.951	320	10/1985 → 07/1989		5,4	24	063524160020	**MSN2060**
2244,2244 L	OM 442.951, OM 442.953, OM 442.980	320	10/1985 → 07/1989		5,4	24	063524160020	**MSN2060**
2422	OM 441.905, OM 441.917	160 165	05/1986 → 06/1989		5,4	24	063524160020	**MSN2060**
2422 K	OM 421.905	159	05/1986 → 06/1989		5,4	24	063524160020	**MSN2060**
2433	OM 422.954, OM 422.957	243	11/1980 → 03/1991		5,4	24	063524160020	**MSN2060**
2433	OM 422.954, OM 422.957	243	10/1980 → 09/1996		5,4	24	063524160020	**MSN2060**
2438	OM 422.953, OM 422.955, OM 422.959	276	08/1973 → 09/1996		5,4	24	063524160020	**MSN2060**
2438 L	OM 422.955, OM 422.959	269 276	11/1980 → 06/1990		5,4	24	063524160020	**MSN2060**
2444 LS	OM 442.951, OM 442.953, OM 442.980	320	10/1985 → 08/1996		5,4	24	063524160020	**MSN2060**
2528 A	OM 422.907, OM 422.911, OM 422.916	206	01/1986 → 03/1991		5,4	24	063524160020	**MSN2060**
2528 AK	OM 422.907, OM 422.911, OM 422.913, OM 422.916	206	01/1986 → 03/1991		5,4	24	063524160020	**MSN2060**
2626	OM 402.906, OM 402.916	188	03/1977 → 03/1981		5,4	24	063524160020	**MSN2060**

		kW ÷ kW		i	kW	V	LONG	SHORT
MERCEDES-BENZ								
NG								
2626 A	OM 402.906, OM 402.916	188	03/1977 → 03/1981		5,4	24	063524160020	**MSN2060**
2626 AB	OM 402.906, OM 402.912, OM 402.926	188	03/1977 → 12/1980		5,4	24	063524160020	**MSN2060**
2626 AK	OM 402.906, OM 402.912	188	03/1977 → 12/1981		5,4	24	063524160020	**MSN2060**
2626 AS	OM 402.906, OM 402.916	188	03/1977 → 03/1981		5,4	24	063524160020	**MSN2060**
2626 B	OM 402.906, OM 402.912, OM 402.926	188	03/1977 → 12/1980		5,4	24	063524160020	**MSN2060**
2626 K	OM 402.906, OM 402.912	188	03/1977 → 03/1981		5,4	24	063524160020	**MSN2060**
2626 S	OM 402.906, OM 402.916	188	03/1977 → 03/1981		5,4	24	063524160020	**MSN2060**
2628	OM 422.905, OM 422.911	206	02/1980 → 03/1991		5,4	24	063524160020	**MSN2060**
2628 A	OM 422.907, OM 422.913, OM 422.916	206	02/1980 → 03/1991		5,4	24	063524160020	**MSN2060**
2628 AK	OM 422.913	206	02/1980 → 03/1991		5,4	24	063524160020	**MSN2060**
2628 AS	OM 422.907, OM 422.913	206	02/1980 → 03/1991		5,4	24	063524160020	**MSN2060**
2628 B	OM 422.905, OM 422.911	206	02/1980 → 08/1989		5,4	24	063524160020	**MSN2060**
2628 K	OM 422.905, OM 422.911	206	02/1980 → 03/1991		5,4	24	063524160020	**MSN2060**
2628 S	OM 422.905, OM 422.911	206	02/1980 → 03/1991		5,4	24	063524160020	**MSN2060**
2635	OM 442.950, OM 442.952	260	04/1986 → 03/1991		5,4	24	063524160020	**MSN2060**
2635 A	OM 442.962	269	09/1987 → 03/1991		5,4	24	063524160020	**MSN2060**
2635 AK	OM 442.962	269	09/1987 → 03/1991		5,4	24	063524160020	**MSN2060**
2635 AS	OM 442.962	269	09/1987 → 03/1991		5,4	24	063524160020	**MSN2060**
2635 S	OM 442.950, OM 442.952	260	04/1986 → 03/1991		5,4	24	063524160020	**MSN2060**
2644	OM 442.951, OM 442.953, OM 442.980	320	10/1985 → 02/1990		5,4	24	063524160020	**MSN2060**
2644 S	OM 442.953, OM 442.980	320	10/1985 → 02/1990		5,4	24	063524160020	**MSN2060**
3025 B	OM 422.909, OM 422.912	184	12/1985 → 07/1987		5,4	24	063524160020	**MSN2060**

		kW ÷ kW		i	kW	V	LONG	SHORT
MERCEDES-BENZ								
NG								
3025 B	OM 422.919, OM 422.920	184 206	12/1985 → 07/1987		5,4	24	063524160020	**MSN2060**
3025 K	OM 422.909	184	12/1985 → 07/1987		5,4	24	063524160020	**MSN2060**
3025 K	OM 422.920	184	12/1985 → 07/1987		5,4	24	063524160020	**MSN2060**
3028	OM 422.905, OM 422.911	206	02/1980 → 03/1991		5,4	24	063524160020	**MSN2060**
3028 B	OM 422.919	206	12/1985 → 07/1987		5,4	24	063524160020	**MSN2060**
3028 K	OM 422.919	206	12/1985 → 07/1987		5,4	24	063524160020	**MSN2060**
3033	OM 422.954, OM 422.957	243	05/1982 → 05/1987		5,4	24	063524160020	**MSN2060**
3228 B	OM 422.919, OM 422.921	206	07/1987 → 03/1991		5,4	24	063524160020	**MSN2060**
3228 K	OM 422.919, OM 422.921	206	07/1987 → 03/1991		5,4	24	063524160020	**MSN2060**
3235	OM 442.944	260 269	07/1988 → 08/1994		5,4	24	063524160020	**MSN2060**
3328	OM 422.905, OM 422.911, OM 422.913	206	02/1980 → 03/1991		5,4	24	063524160020	**MSN2060**
3328 B	OM 422.914, OM 422.919	206	07/1982 → 07/1987		5,4	24	063524160020	**MSN2060**
3328 B	OM 422.905, OM 422.907, OM 422.911, OM 422.913, OM 422.916	206	02/1980 → 03/1991		5,4	24	063524160020	**MSN2060**
3328 K	OM 422.914, OM 422.919	206	07/1982 → 07/1987		5,4	24	063524160020	**MSN2060**
3333	OM 422.954	243	12/1982 → 11/1991		5,4	24	063524160020	**MSN2060**
3333 B	OM 422.954	243	12/1982 → 11/1991		5,4	24	063524160020	**MSN2060**
3333 K	OM 422.954	243	12/1982 → 11/1991		5,4	24	063524160020	**MSN2060**
3338	OM 442.950	260	01/1981 → 12/1986		5,4	24	063524160020	**MSN2060**
3528	OM 422.905, OM 422.919	206	07/1982 → 07/1987		5,4	24	063524160020	**MSN2060**
3528 B	OM 422.919	206	07/1987 → 09/1989		5,4	24	063524160020	**MSN2060**
3528 K	OM 422.919	206	07/1982 → 07/1987		5,4	24	063524160020	**MSN2060**
3528 K	OM 422.919	206	07/1987 → 09/1989		5,4	24	063524160020	**MSN2060**
3535 AK	OM 442.950, OM 442.952	260	09/1987 → 02/1990		5,4	24	063524160020	**MSN2060**
3535 K	OM 442.950, OM 442.959	260 269	09/1987 → 01/1989		5,4	24	063524160020	**MSN2060**
3544	OM 442.951, OM 442.953, OM 442.980	320	09/1987 → 03/1992		5,4	24	063524160020	**MSN2060**
3544 S	OM 442.951, OM 442.980	320	09/1987 → 03/1992		5,4	24	063524160020	**MSN2060**

		kW ÷ kW		i	kW	V	LONG	SHORT
MERCEDES-BENZ								
O 301								
O 301	OM 366.965	125	03/1986 → 05/1987		4,0	24	063523683090	**MSN2059**
O 301	OM 366.917	100	06/1986 → 05/1987		4,0	24	063523683090	**MSN2059**
O 303								
O 303	OM 421.951	184	11/1985 → 04/1989		5,4	24	063524160020	**MSN2060**
O 303	OM 422.908	206	01/1980 → 09/1987		5,4	24	063524160020	**MSN2060**
O 303	OM 421.908, OM 441.908, OM 441.909	159 160	01/1980 → 09/1992		5,4	24	063524160020	**MSN2060**
O 303	OM 422.908, OM 422.917	206	01/1980 → 09/1987		5,4	24	063524160020	**MSN2060**
O 303	OM 401.912	141	10/1974 → 06/1983		5,4	24	063524160020	**MSN2060**
O 303	OM 422.951, OM 422.963	243	08/1980 → 09/1987		5,4	24	063524160020	**MSN2060**
O 303	OM 421.908, OM 441.908, OM 441.909, OM 441.911	159 165	01/1980 → 01/1989		5,4	24	063524160020	**MSN2060**
O 303	OM 441.950, OM 441.953	200	12/1987 → 09/1992		5,4	24	063524160020	**MSN2060**
O 303	OM 442.910, OM 442.911, OM 442.918, OM 442.939	213 218	09/1987 → 09/1992		5,4	24	063524160020	**MSN2060**
O 303	OM 442.954, OM 442.955, OM 442.960, OM 442.961	260 269	09/1987 → 09/1992		5,4	24	063524160020	**MSN2060**
O 303	OM 421.908, OM 441.908, OM 441.909	159 160	01/1980 → 04/1989		5,4	24	063524160020	**MSN2060**
O 303	OM 421.908, OM 441.911	159 160	01/1980 → 09/1992		5,4	24	063524160020	**MSN2060**
O 303	OM 401.907, OM 401.908, OM 401.912	141	10/1974 → 06/1983		5,4	24	063524160020	**MSN2060**
O 303	OM 402.907	188	03/1975 → 06/1983		5,4	24	063524160020	**MSN2060**
O 307								
O 307	OM 407.955	206	11/1976 → 08/1987		5,4	24	063524160020	**MSN2060**
O 309								
O 309 D	OM 353.963, OM 353.966, OM 353.968, OM 353.969	96	08/1979 → 08/1982		3,0	12	063523673030	**MSN2054**
O 309 D	OM 353.963, OM 353.966, OM 353.968, OM 353.969	96	08/1979 → 02/1989		4,0	24	063523683090	**MSN2059**

		kW ÷ kW		i	kW	V	LONG	SHORT
MERCEDES-BENZ								
O 309								
O 309 D	OM 314.946, OM 314.948, OM 314.959, OM 314.962, OM 314.963	63	08/1979 → 02/1989		4,0	24	063523683090	**MSN2059**
O 402								
O 402	OM 366.965	125	06/1986 → 12/1991	325961 →	4,0	24	063522310030	**MSN2042**
O 402	OM 366.917	100	02/1986 → 12/1991	325961 →	4,0	24	063522310030	**MSN2042**
O 402	OM 366.965	125	06/1986 → 12/1991	→325960	4,0	24	063523683090	**MSN2059**
O 402	OM 366.917	100	02/1986 → 12/1991	→325960	4,0	24	063523683090	**MSN2059**
O 404								
O 404	OM 441.980, OM 445.934	250	09/1991 → 10/1999		5,4	24	063524160020	**MSN2060**
O 404	OM 445.935	213	01/1995 → 10/1999		5,4	24	063524160020	**MSN2060**
O 404	OM 442.931	195	09/1991 → 01/1992		5,4	24	063524160020	**MSN2060**
O 404	OM 442.930	213	09/1991 → 01/1992		5,4	24	063524160020	**MSN2060**
O 404	OM 446.938	280	09/1994 → 10/1999		5,4	24	063524160020	**MSN2060**
O 404	OM 402.970	280	09/1991 → 10/1999		5,4	24	063524160020	**MSN2060**
O 404	OM 401.970	213	09/1991 → 10/1999		5,4	24	063524160020	**MSN2060**
O 404	OM 401.974	200	09/1991 → 10/1999		5,4	24	063524160020	**MSN2060**
O 404	OM 445.935	213	09/1994 → 10/1999		5,4	24	063524160020	**MSN2060**
O 404	OM 441.921	165	09/1991 → 01/1992		5,4	24	063524160020	**MSN2060**
O 404	OM 441.922	151	09/1991 → 01/1992		5,4	24	063524160020	**MSN2060**
O 404	OM 446.934, OM 446.938	280	09/1994 → 10/1999		5,4	24	063524160020	**MSN2060**
SK								
1728, 1729, 1729 L	OM 442.906, OM 442.907, OM 442.908, OM 442.923, OM 442.925	210 218	07/1988 → 08/1994		5,4	24	063524160020	**MSN2060**
1729 AK	OM 442.907, OM 442.926	213	07/1988 → 09/1993		5,4	24	063524160020	**MSN2060**
1729 K	OM 442.906, OM 442.907, OM 442.925	213 218	07/1988 → 08/1994		5,4	24	063524160020	**MSN2060**

		kW ÷ kW			kW	V	LONG	SHORT
MERCEDES-BENZ								
SK								
1729 S,1729 LS	OM 442.906, OM 442.907, OM 442.923, OM 442.925	210	218	07/1988 → 08/1994	5,4	24	063524160020	**MSN2060**
1735 AK	OM 442.942, OM 442.966	260	269	08/1989 → 08/1994	5,4	24	063524160020	**MSN2060**
1735 K	OM 440.940, OM 442.944, OM 442.963, OM 442.964, OM 442.976	250	269	07/1988 → 08/1994	5,4	24	063524160020	**MSN2060**
1735 L	OM 442.906	218		07/1988 → 08/1994	5,4	24	063524160020	**MSN2060**
1735 S,1735 LS	OM 442.944, OM 442.963, OM 442.964, OM 442.976	260	269	07/1988 → 08/1994	5,4	24	063524160020	**MSN2060**
1735,1735 L	OM 442.944, OM 442.963, OM 442.964, OM 442.976	260	269	07/1988 → 08/1994	5,4	24	063524160020	**MSN2060**
1748 S,1748 LS	OM 442.985, OM 442.989	353	362	07/1988 → 07/1992	5,4	24	063524160020	**MSN2060**
1748,1748 L	OM 442.985, OM 442.989	353	362	07/1988 → 07/1992	5,4	24	063524160020	**MSN2060**
1831 AK	OM 401.986	230		05/1991 → 08/1996	5,4	24	063524160020	**MSN2060**
1831 AK	OM 445.930	230		01/1994 → 08/1996	5,4	24	063524160020	**MSN2060**
1831 K	OM 401.972, OM 401.979, OM 401.993	230		07/1992 → 08/1996	5,4	24	063524160020	**MSN2060**
1831 K	OM 441.986, OM 441.993, OM 445.929, OM 445.937	230	250	07/1992 → 08/1996	5,4	24	063524160020	**MSN2060**
1831 S,1831 LS	OM 401.972, OM 401.979, OM 401.993	230		07/1992 → 08/1996	5,4	24	063524160020	**MSN2060**
1831 S,1831 LS	OM 445.929, OM 445.937	230		01/1994 → 08/1996	5,4	24	063524160020	**MSN2060**
1831,1831 L	OM 401.972, OM 401.979, OM 401.993	230		07/1992 → 08/1996	5,4	24	063524160020	**MSN2060**
1831,1831 L	OM 445.929, OM 445.937	230		01/1994 → 08/1996	5,4	24	063524160020	**MSN2060**
1834 S,1834 LS	OM 441.986, OM 441.996, OM 445.920, OM 445.939	250		10/1993 → 08/1996	5,4	24	063524160020	**MSN2060**
1834,1834 L	OM 441.986, OM 441.996, OM 445.920, OM 445.939	250		10/1993 → 08/1996	5,4	24	063524160020	**MSN2060**

		kW ÷ kW		i	kW	V	LONG	SHORT
MERCEDES-BENZ								
SK								
1838 AK	OM 440.982	370	12/1992 → 08/1996		5,4	24	063524160020	**MSN2060**
1838 AK	OM 440.979	320	12/1992 → 08/1996		5,4	24	063524160020	**MSN2060**
1838 AK	OM 446.927	280	01/1994 → 08/1996		5,4	24	063524160020	**MSN2060**
1838 AK	OM 402.978, OM 402.996	280	12/1992 → 08/1996		5,4	24	063524160020	**MSN2060**
1838 K	OM 446.924	280	06/1995 → 08/1996		5,4	24	063524160020	**MSN2060**
1838 K	OM 402.971, OM 402.975, OM 402.985	280	12/1990 → 09/1996		5,4	24	063524160020	**MSN2060**
1838 S,1838 LS	OM 402.971, OM 402.972, OM 402.975, OM 402.985, OM 402.986	280	12/1990 → 09/1996		5,4	24	063524160020	**MSN2060**
1838 S,1838 LS	OM 440.978, OM 440.991, OM 446.943	320	12/1990 → 09/1996		5,4	24	063524160020	**MSN2060**
1838 S,1838 LS	OM 446.924, OM 446.925	280	06/1995 → 08/1996		5,4	24	063524160020	**MSN2060**
1838,1838 L	OM 402.971, OM 402.972, OM 402.975, OM 402.985, OM 402.986	280	12/1990 → 09/1996		5,4	24	063524160020	**MSN2060**
1838,1838 L	OM 446.924, OM 446.925	280	06/1995 → 08/1996		5,4	24	063524160020	**MSN2060**
1838,1838 L	OM 440.978, OM 440.991	320	12/1990 → 09/1996		5,4	24	063524160020	**MSN2060**
1840 LS	OM 402.971	280	07/1991 → 07/1992		5,4	24	063524160020	**MSN2060**
1844 S,1844 LS	OM 440.970, OM 440.978, OM 446.922	320	11/1991 → 08/1996		5,4	24	063524160020	**MSN2060**
1844,1844 L	OM 440.970, OM 440.978, OM 446.922	320	11/1991 → 08/1996		5,4	24	063524160020	**MSN2060**
1850 LAS	OM 440.973, OM 442.985, OM 442.992	362 370	12/1990 → 09/1996		5,4	24	063524160020	**MSN2060**
1850 S,1850 LS	OM 440.973, OM 442.985, OM 442.989, OM 442.992, OM 442.997	362 370	12/1990 → 09/1996		5,4	24	063524160020	**MSN2060**
1850,1850 L	OM 440.973, OM 442.985, OM 442.989, OM 442.992, OM 442.997	362 370	12/1990 → 09/1996		5,4	24	063524160020	**MSN2060**

		kW ÷ kW		i	kW	V	LONG	SHORT
MERCEDES-BENZ								
SK								
1853 AK	OM 446.920, OM 446.946	390	01/1996 → 08/1996		5,4	24	063524160020	**MSN2060**
1853 S,1853 LS	OM 446.920	390	01/1996 → 08/1996		5,4	24	063524160020	**MSN2060**
1853,1853 L	OM 446.920	390	01/1996 → 08/1996		5,4	24	063524160020	**MSN2060**
1922	OM 441.905, OM 441.914, OM 441.923	160 165	05/1989 → 08/1994		5,4	24	063524160020	**MSN2060**
1922 AK	OM 441.914, OM 441.926	160 165	08/1989 → 08/1994		5,4	24	063524160020	**MSN2060**
1922 K	OM 441.905, OM 441.914, OM 441.923	160 165	05/1989 → 08/1994		5,4	24	063524160020	**MSN2060**
1922 S	OM 441.905, OM 441.914, OM 441.923	160 165	05/1989 → 08/1994		5,4	24	063524160020	**MSN2060**
1929 A		269	07/1988 → 09/1993		5,4	24	063524160020	**MSN2060**
1929 A	OM 442.906, OM 442.907, OM 442.909, OM 442.924	210 218	07/1988 → 08/1994		5,4	24	063524160020	**MSN2060**
1929 AK	OM 442.906, OM 442.907, OM 442.909, OM 442.924	210 218	07/1988 → 08/1994		5,4	24	063524160020	**MSN2060**
1929 AS	OM 442.906, OM 442.907, OM 442.926, OM 442.929	213 218	07/1988 → 08/1994		5,4	24	063524160020	**MSN2060**
1929 K	OM 442.906, OM 442.907, OM 442.908, OM 442.916, OM 442.923, OM 442.925	210 218	07/1988 → 08/1994		5,4	24	063524160020	**MSN2060**
1929 S	OM 442.906, OM 442.907, OM 442.908, OM 442.916, OM 442.923, OM 442.925	210 218	07/1988 → 08/1994		5,4	24	063524160020	**MSN2060**
1929,1929 L	OM 442.906, OM 442.907, OM 442.908, OM 442.916, OM 442.923, OM 442.925	210 218	07/1988 → 08/1994		5,4	24	063524160020	**MSN2060**
1935	OM 442.943, OM 442.944, OM 442.963, OM 442.966, OM 442.971, OM 442.976	260 269	05/1989 → 08/1994		5,4	24	063524160020	**MSN2060**

		kW ÷ kW		i	kW	V	LONG	SHORT
MERCEDES-BENZ								
SK								
1935 AK	OM 442.942, OM 442.966, OM 442.971, OM 442.972, OM 442.978	250 269	05/1989 → 08/1994		5,4	24	063524160020	**MSN2060**
1935 AS	OM 442.942, OM 442.966, OM 442.978	250 269	05/1989 → 08/1994		5,4	24	063524160020	**MSN2060**
1935 K	OM 440.940, OM 442.943, OM 442.944, OM 442.963, OM 442.964, OM 442.977	250 269	05/1989 → 08/1994		5,4	24	063524160020	**MSN2060**
1935 S	OM 442.943, OM 442.944, OM 442.963, OM 442.976	269	05/1989 → 08/1994		5,4	24	063524160020	**MSN2060**
1948	OM 442.982, OM 442.984, OM 442.985, OM 442.989	353 362	09/1988 → 07/1992		5,4	24	063524160020	**MSN2060**
2024	OM 401.975	180	02/1993 → 08/1996		5,4	24	063524160020	**MSN2060**
2024	OM 445.924	180	01/1994 → 08/1996		5,4	24	063524160020	**MSN2060**
2024 AK	OM 445.925	180	01/1994 → 08/1996		5,4	24	063524160020	**MSN2060**
2024 AK	OM 401.984	180	02/1993 → 08/1996		5,4	24	063524160020	**MSN2060**
2024 K	OM 401.975	180	02/1993 → 08/1996		5,4	24	063524160020	**MSN2060**
2024 K	OM 445.924	180	01/1994 → 08/1996		5,4	24	063524160020	**MSN2060**
2027 AK	OM 445.933	200	01/1994 → 09/1996		5,4	24	063524160020	**MSN2060**
2027 AK	OM 401.989	200	02/1993 → 08/1996		5,4	24	063524160020	**MSN2060**
2031	OM 401.972, OM 401.979, OM 401.993	230	03/1992 → 09/1996		5,4	24	063524160020	**MSN2060**
2031 A	OM 401.986	230	03/1992 → 08/1996		5,4	24	063524160020	**MSN2060**
2031 A	OM 445.930	230	01/1994 → 08/1996		5,4	24	063524160020	**MSN2060**
2031 A	OM 440.979	320	03/1992 → 08/1996		5,4	24	063524160020	**MSN2060**
2031 A	OM 446.927	280	01/1994 → 08/1996		5,4	24	063524160020	**MSN2060**
2031 A	OM 402.978, OM 402.996	280	03/1992 → 08/1996		5,4	24	063524160020	**MSN2060**
2031 AS	OM 401.986	230	03/1992 → 08/1996		5,4	24	063524160020	**MSN2060**
2031 K	OM 401.972, OM 401.979, OM 401.993	230	03/1992 → 09/1996		5,4	24	063524160020	**MSN2060**
2031 K	OM 445.929	230	01/1994 → 09/1996		5,4	24	063524160020	**MSN2060**
2031 S	OM 401.972, OM 401.979, OM 401.993	230	03/1992 → 09/1996		5,4	24	063524160020	**MSN2060**
2038	OM 446.925, OM 446.927	280	01/1994 → 08/1996		5,4	24	063524160020	**MSN2060**

		kW ÷ kW		i	kW	V	LONG	SHORT
MERCEDES-BENZ								
SK								
2038	OM 402.971, OM 402.972, OM 402.985, OM 402.986, OM 402.996	280	11/1991 → 08/1996		5,4	24	063524160020	**MSN2060**
2038 AS	OM 402.978	280	12/1992 → 08/1996		5,4	24	063524160020	**MSN2060**
2038 AS	OM 446.927	280	01/1994 → 08/1996		5,4	24	063524160020	**MSN2060**
2038 AS	OM 440.970, OM 440.979	320	12/1992 → 08/1996		5,4	24	063524160020	**MSN2060**
2038 S	OM 402.971, OM 402.985	280	11/1991 → 08/1996		5,4	24	063524160020	**MSN2060**
2044	OM 440.970, OM 440.978, OM 446.922	320	01/1992 → 08/1996		5,4	24	063524160020	**MSN2060**
2044 AS	OM 440.970, OM 440.979	320	01/1994 → 08/1996		5,4	24	063524160020	**MSN2060**
2044 S	OM 440.970, OM 446.922	320	01/1992 → 08/1996		5,4	24	063524160020	**MSN2060**
2050	OM 442.985, OM 442.989, OM 442.992, OM 442.997, OM 446.920	362 390	01/1991 → 09/1996		5,4	24	063524160020	**MSN2060**
2050 S	OM 440.976, OM 442.985, OM 442.989, OM 442.992, OM 442.997, OM 446.920	362 390	01/1991 → 09/1996		5,4	24	063524160020	**MSN2060**
2055 AF	OM 442.997	370	01/1992 → 09/1996		5,4	24	063524160020	**MSN2060**
2422 L	OM 441.905, OM 441.923	160 165	07/1987 → 06/1989		5,4	24	063524160020	**MSN2060**
2429	OM 442.906, OM 442.907, OM 442.923, OM 442.925	210 218	07/1988 → 08/1994		5,4	24	063524160020	**MSN2060**
2429 K	OM 442.906, OM 442.907, OM 442.923, OM 442.925	210 218	07/1988 → 08/1994		5,4	24	063524160020	**MSN2060**
2429 S	OM 442.906, OM 442.907, OM 442.925	213 218	07/1988 → 08/1994		5,4	24	063524160020	**MSN2060**
2429 S,2429 LS	OM 442.906, OM 442.907, OM 442.925	213 218	07/1988 → 08/1994		5,4	24	063524160020	**MSN2060**
2429, 2429 L	OM 442.906, OM 442.907, OM 442.908, OM 442.916, OM 442.923, OM 442.925	210 218	07/1988 → 08/1994		5,4	24	063524160020	**MSN2060**

		kW ÷ kW		i	kW	V	LONG	SHORT
MERCEDES-BENZ								
SK								
2429,2429 L	OM 442.906, OM 442.907, OM 442.925	213 218	07/1988 → 08/1994		5,4	24	063524160020	**MSN2060**
2434 L	OM 441.986, OM 441.989	250	01/1991 → 09/1996		5,4	24	063524160020	**MSN2060**
2435	OM 440.941, OM 440.942, OM 442.942, OM 442.944, OM 442.962, OM 442.963, OM 442.966, OM 442.976, OM 442.978	250 260	07/1988 → 08/1994		5,4	24	063524160020	**MSN2060**
2435	OM 442.943, OM 442.944, OM 442.963, OM 442.964, OM 442.965, OM 442.976	260 269	07/1988 → 08/1994		5,4	24	063524160020	**MSN2060**
2435 K	OM 440.940, OM 442.943, OM 442.944, OM 442.963, OM 442.964, OM 442.965	250 269	07/1988 → 08/1994		5,4	24	063524160020	**MSN2060**
2435 LS	OM 442.944, OM 442.963, OM 442.976	260	07/1988 → 08/1994		5,4	24	063524160020	**MSN2060**
2435 S	OM 440.940, OM 442.943, OM 442.944, OM 442.963, OM 442.964, OM 442.965, OM 442.976	250 269	07/1988 → 08/1994		5,4	24	063524160020	**MSN2060**
2435 S,2435 LS	OM 442.943, OM 442.944, OM 442.963, OM 442.964, OM 442.965, OM 442.968, OM 442.976	260 269	07/1988 → 08/1994		5,4	24	063524160020	**MSN2060**
2435,2435 L	OM 442.943, OM 442.944, OM 442.963, OM 442.964, OM 442.965, OM 442.968, OM 442.976	260 269	07/1988 → 08/1994		5,4	24	063524160020	**MSN2060**
2448	OM 442.985, OM 442.992	353 362	07/1988 → 07/1992		5,4	24	063524160020	**MSN2060**
2448 LS	OM 442.984, OM 442.985, OM 442.989	353 362	07/1988 → 07/1992		5,4	24	063524160020	**MSN2060**
2448 S	OM 442.985, OM 442.989, OM 442.992	353 362	07/1988 → 07/1992		5,4	24	063524160020	**MSN2060**

		kW ÷ kW		i	kW	V	MAGNETI MARELLI LONG	MAGNETI MARELLI SHORT
MERCEDES-BENZ								
SK								
2448,2448 L	OM 442.984, OM 442.985, OM 442.989	353 362	07/1988 → 07/1992		5,4	24	063524160020	**MSN2060**
2531	OM 445.930	230	01/1994 → 09/1996		5,4	24	063524160020	**MSN2060**
2531	OM 401.986	230	05/1991 → 09/1996		5,4	24	063524160020	**MSN2060**
2531, 2531 L	OM 401.979, OM 401.986, OM 401.993	230	03/1991 → 09/1996		5,4	24	063524160020	**MSN2060**
2531, 2531 L	OM 445.929, OM 445.930, OM 445.937	230	01/1994 → 09/1996		5,4	24	063524160020	**MSN2060**
2538	OM 402.971, OM 402.972, OM 402.975, OM 402.985, OM 402.986, OM 402.989	280	03/1991 → 08/1996		5,4	24	063524160020	**MSN2060**
2538	OM 440.971, OM 440.981	370	03/1991 → 08/1996		5,4	24	063524160020	**MSN2060**
2538	OM 446.924, OM 446.925	280	01/1994 → 08/1996		5,4	24	063524160020	**MSN2060**
2538	OM 440.970, OM 440.978, OM 440.980	320	03/1991 → 08/1996		5,4	24	063524160020	**MSN2060**
2538	OM 440.971, OM 440.981, OM 442.997	370	03/1991 → 08/1996		5,4	24	063524160020	**MSN2060**
2538 K, 2538 LK	OM 440.971, OM 440.981, OM 442.989, OM 442.997	362 370	03/1991 → 08/1996		5,4	24	063524160020	**MSN2060**
2538 K, 2538 LK	OM 402.971, OM 402.972, OM 402.975, OM 402.985, OM 402.986, OM 402.989	280	03/1991 → 08/1996		5,4	24	063524160020	**MSN2060**
2538 K, 2538 LK	OM 446.924, OM 446.925	280	01/1994 → 08/1996		5,4	24	063524160020	**MSN2060**
2538 K, 2538 LK	OM 440.970, OM 440.978, OM 440.980	320	03/1991 → 08/1996		5,4	24	063524160020	**MSN2060**
2538 S	OM 440.971, OM 440.981	370	03/1991 → 08/1996		5,4	24	063524160020	**MSN2060**
2538 S,2538 LS	OM 446.924, OM 446.925, OM 446.928, OM 446.929	280	01/1994 → 08/1996		5,4	24	063524160020	**MSN2060**
2538 S,2538 LS	OM 440.970, OM 440.978, OM 440.980, OM 446.942, OM 446.948	320	03/1991 → 08/1996		5,4	24	063524160020	**MSN2060**

		kW ÷ kW		i	kW	V	LONG	SHORT
MERCEDES-BENZ								
SK								
2538 S,2538 LS	OM 402.971, OM 402.972, OM 402.975, OM 402.985, OM 402.986, OM 402.989, OM 402.990	280	03/1991 → 08/1996		5,4	24	063524160020	**MSN2060**
2538,2538 L	OM 402.971, OM 402.972, OM 402.975, OM 402.985, OM 402.986, OM 402.989	280	03/1991 → 08/1996		5,4	24	063524160020	**MSN2060**
2538,2538 L	OM 446.924, OM 446.925	280	01/1994 → 08/1996		5,4	24	063524160020	**MSN2060**
2538,2538 L	OM 440.970, OM 440.978, OM 440.980	320	03/1991 → 08/1996		5,4	24	063524160020	**MSN2060**
2544	OM 440.970, OM 440.978	320	01/1994 → 08/1996		5,4	24	063524160020	**MSN2060**
2544 LS	OM 440.970, OM 440.978, OM 446.942	320	01/1994 → 08/1996		5,4	24	063524160020	**MSN2060**
2544 S	OM 440.970, OM 440.972, OM 446.922	320	01/1992 → 08/1996		5,4	24	063524160020	**MSN2060**
2544 S	OM 440.970	320	01/1992 → 08/1994		5,4	24	063524160020	**MSN2060**
2544, 2544 L	OM 440.970, OM 440.978, OM 446.922	320	01/1992 → 08/1996		5,4	24	063524160020	**MSN2060**
2544,2544 L	OM 440.970, OM 440.978, OM 446.922	320	01/1992 → 08/1996		5,4	24	063524160020	**MSN2060**
2550	OM 440.971, OM 440.973	370 390	07/1991 → 08/1996		5,4	24	063524160020	**MSN2060**
2550	OM 442.989, OM 442.997	362 370	01/1991 → 08/1996		5,4	24	063524160020	**MSN2060**
2550 K	OM 440.971, OM 440.981, OM 442.989, OM 442.997	362 370	07/1991 → 08/1996		5,4	24	063524160020	**MSN2060**
2550 S, 2550 LS	OM 440.971, OM 440.973, OM 442.997, OM 442.998, OM 446.920	370 390	01/1991 → 08/1996		5,4	24	063524160020	**MSN2060**
2550,2550 L	OM 440.971, OM 440.973, OM 442.997, OM 442.998, OM 446.920	370 390	01/1991 → 08/1996		5,4	24	063524160020	**MSN2060**

		kW ÷ kW		i	kW	V	LONG	SHORT
MERCEDES-BENZ								
SK								
2553 S, 2553 LS	OM 446.920	390	01/1996 → 08/1996		5,4	24	063524160020	**MSN2060**
2553,2553 L	OM 446.920	390	01/1996 → 08/1996		5,4	24	063524160020	**MSN2060**
2629	OM 442.906, OM 442.907, OM 442.917, OM 442.925, OM 442.926, OM 442.929	213 218	07/1988 → 08/1994		5,4	24	063524160020	**MSN2060**
2629	OM 442.959	269	07/1988 → 08/1994		5,4	24	063524160020	**MSN2060**
2629 A	OM 402.982	280	07/1988 → 08/1994		5,4	24	063524160020	**MSN2060**
2629 A	OM 440.970	320	07/1988 → 08/1994		5,4	24	063524160020	**MSN2060**
2629 A	OM 440.971, OM 442.989, OM 442.997	362 370	07/1988 → 08/1994		5,4	24	063524160020	**MSN2060**
2629 A	OM 442.942, OM 442.959, OM 442.966	269	07/1988 → 08/1994		5,4	24	063524160020	**MSN2060**
2629 A	OM 442.907, OM 442.926	213 218	07/1988 → 08/1994		5,4	24	063524160020	**MSN2060**
2629 A	OM 443.940	340	07/1988 → 08/1994		5,4	24	063524160020	**MSN2060**
2629 AK	OM 440.970	320	07/1988 → 08/1994		5,4	24	063524160020	**MSN2060**
2629 AK	OM 440.971, OM 442.989, OM 442.997	362 370	07/1988 → 08/1994		5,4	24	063524160020	**MSN2060**
2629 AK	OM 442.942, OM 442.959, OM 442.966	269	07/1988 → 08/1994		5,4	24	063524160020	**MSN2060**
2629 AK	OM 442.907, OM 442.926	213 218	07/1988 → 08/1994		5,4	24	063524160020	**MSN2060**
2629 AS	OM 442.907, OM 442.926	213 218	07/1988 → 08/1994		5,4	24	063524160020	**MSN2060**
2629 AS	OM 442.989, OM 442.997	362 370	07/1988 → 08/1994		5,4	24	063524160020	**MSN2060**
2629 B	OM 442.906, OM 442.907, OM 442.917, OM 442.925, OM 442.926, OM 442.929	213 218	07/1988 → 08/1994		5,4	24	063524160020	**MSN2060**
2629 K	OM 401.979	230	07/1988 → 08/1994		5,4	24	063524160020	**MSN2060**
2629 K	OM 442.989	362	07/1988 → 08/1994		5,4	24	063524160020	**MSN2060**
2629 K	OM 442.906, OM 442.907, OM 442.917, OM 442.925, OM 442.926, OM 442.929	213 218	07/1988 → 08/1994		5,4	24	063524160020	**MSN2060**
2629 S	OM 442.906, OM 442.907, OM 442.917, OM 442.925, OM 442.926, OM 442.929	213 218	07/1988 → 08/1994		5,4	24	063524160020	**MSN2060**

		kW ÷ kW		i	kW	V	LONG	SHORT
MERCEDES-BENZ								
SK								
2631	OM 401.972, OM 401.979, OM 401.981, OM 401.987, OM 401.993	230	06/1992 → 08/1996		5,4	24	063524160020	**MSN2060**
2631	OM 441.998, OM 445.920, OM 445.929, OM 445.930, OM 445.931	230 250	06/1992 → 08/1996		5,4	24	063524160020	**MSN2060**
2631 A	OM 401.986	230	06/1992 → 08/1996		5,4	24	063524160020	**MSN2060**
2631 A	OM 445.930	230	01/1994 → 08/1996		5,4	24	063524160020	**MSN2060**
2631 AK, 2634 AK	OM 445.930	230	01/1994 → 08/1996		5,4	24	063524160020	**MSN2060**
2631 AK, 2634 AK	OM 401.986	230	06/1992 → 08/1996		5,4	24	063524160020	**MSN2060**
2631 AS	OM 401.986	230	06/1992 → 08/1996		5,4	24	063524160020	**MSN2060**
2631 B	OM 401.972, OM 401.979, OM 401.981, OM 401.987, OM 401.993	230	06/1992 → 08/1996		5,4	24	063524160020	**MSN2060**
2631 K	OM 401.972, OM 401.979, OM 401.993	230	06/1992 → 08/1994		5,4	24	063524160020	**MSN2060**
2631 K	OM 441.998, OM 445.929	230	06/1992 → 08/1994		5,4	24	063524160020	**MSN2060**
2631 S	OM 401.972, OM 401.979, OM 401.981, OM 401.987, OM 401.993	230	06/1992 → 08/1996		5,4	24	063524160020	**MSN2060**
2631 S	OM 441.998, OM 445.929, OM 445.930, OM 445.931	230	06/1992 → 08/1996		5,4	24	063524160020	**MSN2060**
2634	OM 445.920	250	01/1994 → 08/1996		5,4	24	063524160020	**MSN2060**
2634 S	OM 441.986	250	01/1994 → 08/1996		5,4	24	063524160020	**MSN2060**
2635	OM 442.944, OM 442.964, OM 442.966, OM 442.976	260 269	07/1988 → 08/1994		5,4	24	063524160020	**MSN2060**
2635	OM 442.997	370	01/1991 → 08/1994		5,4	24	063524160020	**MSN2060**
2635	OM 442.909, OM 442.923	210	07/1988 → 08/1994		5,4	24	063524160020	**MSN2060**
2635 A	OM 442.942, OM 442.966, OM 442.972	260 269	02/1990 → 08/1994		5,4	24	063524160020	**MSN2060**
2635 A	OM 440.970	320	12/1991 → 08/1994		5,4	24	063524160020	**MSN2060**
2635 AK	OM 440.941, OM 440.942, OM 442.942, OM 442.966, OM 442.972	250 269	02/1990 → 08/1994		5,4	24	063524160020	**MSN2060**

		kW ÷ kW		i	kW	V	MAGNETI MARELLI LONG	MAGNETI MARELLI SHORT
MERCEDES-BENZ								
SK								
2635 AK	OM 440.971, OM 440.973, OM 442.989, OM 442.997	362 370	02/1990 → 08/1994		5,4	24	063524160020	**MSN2060**
2635 AS	OM 442.989	362	02/1990 → 08/1994		5,4	24	063524160020	**MSN2060**
2635 AS	OM 440.941, OM 440.942, OM 442.942, OM 442.966, OM 442.972	250 269	02/1992 → 08/1994		5,4	24	063524160020	**MSN2060**
2635 K	OM 402.971	280	01/1991 → 08/1994		5,4	24	063524160020	**MSN2060**
2635 K	OM 440.940, OM 442.944, OM 442.964, OM 442.966	250 269	07/1988 → 08/1994		5,4	24	063524160020	**MSN2060**
2635 K	OM 440.970	320	07/1991 → 08/1994		5,4	24	063524160020	**MSN2060**
2635 K	OM 442.989, OM 442.994, OM 442.997	362 370	07/1988 → 08/1994		5,4	24	063524160020	**MSN2060**
2635 S	OM 440.940, OM 442.944, OM 442.964, OM 442.966	250 269	07/1988 → 08/1994		5,4	24	063524160020	**MSN2060**
2635 S	OM 442.989, OM 442.994, OM 442.997	362 370	07/1988 → 08/1994		5,4	24	063524160020	**MSN2060**
2638 A	OM 402.975, OM 402.978, OM 402.996	280	09/1991 → 09/1996		5,4	24	063524160020	**MSN2060**
2638 A	OM 446.927	280	01/1994 → 09/1996		5,4	24	063524160020	**MSN2060**
2638 A	OM 440.970, OM 440.979	320	07/1992 → 09/1996		5,4	24	063524160020	**MSN2060**
2638 AK	OM 440.970, OM 440.979, OM 446.936	320	07/1992 → 09/1996		5,4	24	063524160020	**MSN2060**
2638 AK	OM 442.997	370	07/1992 → 09/1996		5,4	24	063524160020	**MSN2060**
2638 AK	OM 402.975, OM 402.978, OM 402.996	280	07/1992 → 09/1996		5,4	24	063524160020	**MSN2060**
2638 AK	OM 446.927	280	01/1994 → 09/1996		5,4	24	063524160020	**MSN2060**
2638 AS	OM 402.975, OM 402.978, OM 402.996	280	07/1992 → 09/1996		5,4	24	063524160020	**MSN2060**
2638 AS	OM 446.927	280	01/1994 → 09/1996		5,4	24	063524160020	**MSN2060**
2638 AS	OM 440.970, OM 440.979, OM 446.936	320	07/1992 → 09/1996		5,4	24	063524160020	**MSN2060**
2638 AS	OM 440.982	370	07/1992 → 09/1996		5,4	24	063524160020	**MSN2060**

		kW ÷ kW		i	kW	V	LONG	SHORT
MERCEDES-BENZ								
SK								
2638 K	OM 402.971, OM 402.972, OM 402.975, OM 402.985, OM 402.986	280	09/1991 → 08/1996		5,4	24	063524160020	**MSN2060**
2638 K	OM 440.990, OM 446.924, OM 446.925, OM 446.926	280	09/1991 → 09/1996		5,4	24	063524160020	**MSN2060**
2638 K	OM 440.970, OM 440.978	320	09/1991 → 09/1996		5,4	24	063524160020	**MSN2060**
2638 K	OM 442.989	362	09/1991 → 09/1996		5,4	24	063524160020	**MSN2060**
2638 K	OM 440.981, OM 442.997	370	09/1991 → 09/1996		5,4	24	063524160020	**MSN2060**
2638 S	OM 440.970, OM 440.978	320	09/1991 → 09/1996		5,4	24	063524160020	**MSN2060**
2638 S	OM 440.981, OM 442.997	370	09/1991 → 09/1996		5,4	24	063524160020	**MSN2060**
2638, 2638 L	OM 440.990, OM 446.924, OM 446.925, OM 446.926	280	09/1991 → 09/1996		5,4	24	063524160020	**MSN2060**
2638, 2638 L	OM 440.970, OM 440.978	320	09/1991 → 09/1996		5,4	24	063524160020	**MSN2060**
2638, 2638 L	OM 440.981	370	09/1991 → 09/1996		5,4	24	063524160020	**MSN2060**
2638, 2638 L	OM 402.971, OM 402.972, OM 402.975, OM 402.985, OM 402.986	280	09/1991 → 08/1996		5,4	24	063524160020	**MSN2060**
2644 A	OM 440.970, OM 440.979, OM 446.936	320	01/1992 → 09/1996		5,4	24	063524160020	**MSN2060**
2644 S	OM 440.970, OM 446.922	320	01/1992 → 09/1996		5,4	24	063524160020	**MSN2060**
2644, 2644 L	OM 440.970, OM 440.978, OM 446.922	320	01/1992 → 09/1996		5,4	24	063524160020	**MSN2060**
2648 AK	OM 440.973, OM 442.989	362 370	02/1990 → 07/1992		5,4	24	063524160020	**MSN2060**
2648 S	OM 442.985, OM 442.989, OM 442.992, OM 442.994	353 362	12/1988 → 07/1992		5,4	24	063524160020	**MSN2060**
2648 S	OM 442.983	329	12/1988 → 07/1992		5,4	24	063524160020	**MSN2060**
2650	OM 446.920	390	01/1996 → 09/1996		5,4	24	063524160020	**MSN2060**
2650 A	OM 440.982	370	07/1992 → 09/1996		5,4	24	063524160020	**MSN2060**
2650 AK	OM 440.971, OM 442.989, OM 442.997	362 370	07/1992 → 08/1994		5,4	24	063524160020	**MSN2060**

		kW ÷ kW		i	kW	V	LONG	SHORT
MERCEDES-BENZ								
SK								
2650 AS	OM 440.971, OM 440.982, OM 442.989, OM 442.997	362 370	01/1994 → 09/1996		5,4	24	063524160020	**MSN2060**
2650 K	OM 442.989, OM 442.994, OM 442.997	362 370	07/1992 → 08/1994		5,4	24	063524160020	**MSN2060**
2650 S	OM 440.971, OM 440.973, OM 442.997	370	07/1992 → 09/1996		5,4	24	063524160020	**MSN2060**
2650, 2650 L	OM 440.973, OM 440.981, OM 442.989, OM 442.997	362 370	07/1992 → 09/1996		5,4	24	063524160020	**MSN2060**
2653 AK	OM 446.946	390	01/1996 → 09/1996		5,4	24	063524160020	**MSN2060**
3053 S	OM 440.976	370	12/1993 → 09/1996		5,4	24	063524160020	**MSN2060**
3053 S	OM 446.933	390	01/1994 → 09/1996		5,4	24	063524160020	**MSN2060**
3229	OM 442.915, OM 442.916, OM 442.927, OM 442.928	213 218	09/1989 → 08/1994		5,4	24	063524160020	**MSN2060**
3229 B	OM 442.915, OM 442.916, OM 442.927, OM 442.928	213 218	09/1989 → 07/1992		5,4	24	063524160020	**MSN2060**
3229 K	OM 442.915, OM 442.916, OM 442.923, OM 442.927, OM 442.928	210 218	09/1989 → 01/1992		5,4	24	063524160020	**MSN2060**
3233 B	OM 441.982, OM 441.985	250	10/1990 → 07/1992		5,4	24	063524160020	**MSN2060**
3233 K	OM 441.982	250	10/1990 → 07/1992		5,4	24	063524160020	**MSN2060**
3234 B	OM 441.988, OM 441.990, OM 441.992, OM 445.922	250	02/1992 → 09/1996		5,4	24	063524160020	**MSN2060**
3234 K	OM 441.988, OM 441.990, OM 441.992, OM 445.922	250	02/1992 → 09/1996		5,4	24	063524160020	**MSN2060**
3235	OM 442.944, OM 442.959, OM 442.963, OM 442.976	260 269	10/1988 → 07/1992		5,4	24	063524160020	**MSN2060**
3235 K	OM 442.950, OM 442.952, OM 442.959	260 269	07/1987 → 07/1992		5,4	24	063524160020	**MSN2060**
3235 L	OM 442.944, OM 442.963, OM 442.976	260	07/1988 → 08/1994		5,4	24	063524160020	**MSN2060**
3238	OM 446.924	280	01/1994 → 09/1996		5,4	24	063524160020	**MSN2060**

		kW ÷ kW		i	kW	V	LONG	SHORT
MERCEDES-BENZ								
SK								
3238	OM 402.971, OM 402.975, OM 402.985	280	03/1991 → 09/1996		5,4	24	063524160020	**MSN2060**
3238	OM 440.971, OM 442.989, OM 442.997	362 370	10/1990 → 09/1996		5,4	24	063524160020	**MSN2060**
3238	OM 402.971, OM 402.973, OM 402.977, OM 402.982, OM 402.987	280	10/1990 → 09/1996		5,4	24	063524160020	**MSN2060**
3238 L	OM 446.924, OM 446.925, OM 446.927	280	01/1994 → 09/1996		5,4	24	063524160020	**MSN2060**
3238 L	OM 402.972, OM 402.985, OM 402.986	280	10/1990 → 09/1996		5,4	24	063524160020	**MSN2060**
3238, 3238 L	OM 440.970, OM 440.980, OM 446.939	320	10/1990 → 09/1996		5,4	24	063524160020	**MSN2060**
3238, 3238 L	OM 446.926	280	01/1994 → 09/1996		5,4	24	063524160020	**MSN2060**
3244	OM 440.970, OM 440.980, OM 446.939	320	01/1994 → 09/1996		5,4	24	063524160020	**MSN2060**
3244 L	OM 440.970, OM 446.922	320	10/1990 → 09/1996		5,4	24	063524160020	**MSN2060**
3248	OM 442.985, OM 442.989, OM 442.992	353 362	07/1987 → 09/1996		5,4	24	063524160020	**MSN2060**
3248	OM 442.984, OM 442.985	353	07/1987 → 09/1996		5,4	24	063524160020	**MSN2060**
3250 L	OM 440.971, OM 440.973, OM 440.975, OM 442.997	370	10/1990 → 09/1996		5,4	24	063524160020	**MSN2060**
3253, 3253 L	OM 446.920, OM 446.933, OM 446.945	390	01/1996 → 09/1996		5,4	24	063524160020	**MSN2060**
3534 K	OM 441.988, OM 445.922	250	10/1993 → 09/1996		5,4	24	063524160020	**MSN2060**
3535	OM 442.942, OM 442.944, OM 442.959, OM 442.964, OM 442.966	260 269	10/1988 → 08/1994		5,4	24	063524160020	**MSN2060**
3535 AK	OM 402.982, OM 402.983	280	03/1991 → 08/1994		5,4	24	063524160020	**MSN2060**
3535 AK	OM 442.946, OM 442.957	266	02/1990 → 08/1994		5,4	24	063524160020	**MSN2060**
3535 B	OM 442.945, OM 442.959	269	10/1988 → 08/1994		5,4	24	063524160020	**MSN2060**

		kW ÷ kW		i	kW	V	MAGNETI MARELLI LONG	MAGNETI MARELLI SHORT
MERCEDES-BENZ								
SK								
3535 B	OM 442.989	362	10/1988 → 08/1994		5,4	24	063524160020	**MSN2060**
3535 K	OM 442.989	362	10/1988 → 08/1994		5,4	24	063524160020	**MSN2060**
3535 K	OM 402.982, OM 402.983	280	03/1991 → 08/1994		5,4	24	063524160020	**MSN2060**
3535 K	OM 442.945, OM 442.959	269	10/1988 → 08/1994		5,4	24	063524160020	**MSN2060**
3538	OM 402.973, OM 402.978, OM 402.987	280	03/1991 → 09/1996		5,4	24	063524160020	**MSN2060**
3538	OM 402.971, OM 402.972, OM 402.973, OM 402.974, OM 402.975, OM 402.977, OM 402.978, OM 402.982, OM 402.983, OM 402.984, OM 402.985	280	09/1991 → 09/1996		5,4	24	063524160020	**MSN2060**
3538 AK	OM 440.975, OM 440.982, OM 440.983, OM 442.997	370	03/1991 → 09/1996		5,4	24	063524160020	**MSN2060**
3538 AK	OM 446.926, OM 446.930, OM 446.931	280	01/1994 → 09/1996		5,4	24	063524160020	**MSN2060**
3538 AK	OM 402.973, OM 402.978, OM 402.982, OM 402.983, OM 402.987	280	05/1992 → 09/1996		5,4	24	063524160020	**MSN2060**
3538 AK	OM 440.970, OM 440.979, OM 440.984, OM 440.985, OM 446.939, OM 446.940	320	05/1992 → 09/1996		5,4	24	063524160020	**MSN2060**
3538 K	OM 440.975, OM 440.982, OM 440.983, OM 442.989	362 370	03/1991 → 09/1996		5,4	24	063524160020	**MSN2060**
3538 K	OM 440.970, OM 440.979, OM 440.984, OM 446.939, OM 446.940	320	03/1991 → 09/1996		5,4	24	063524160020	**MSN2060**
3538 K	OM 446.926, OM 446.930	280	01/1994 → 09/1996		5,4	24	063524160020	**MSN2060**
3538 K	OM 402.973, OM 402.978, OM 402.982, OM 402.983, OM 402.987	280	03/1991 → 09/1996		5,4	24	063524160020	**MSN2060**
3544	OM 440.970, OM 440.978, OM 446.922	320	07/1992 → 09/1996		5,4	24	063524160020	**MSN2060**

		kW ÷ kW		i	kW	V	LONG	SHORT
MERCEDES-BENZ								
SK								
3544 AK	OM 440.970, OM 440.980, OM 440.985	320	07/1992 → 09/1996		5,4	24	063524160020	**MSN2060**
3544 K	OM 440.970	320	07/1992 → 09/1996		5,4	24	063524160020	**MSN2060**
3548	OM 440.975, OM 442.993	362 370	05/1992 → 07/1992		5,4	24	063524160020	**MSN2060**
3550 K	OM 440.975, OM 440.982, OM 442.997	370	05/1992 → 09/1996		5,4	24	063524160020	**MSN2060**
3550 S	OM 440.975, OM 442.993, OM 442.997	362 370	05/1992 → 09/1996		5,4	24	063524160020	**MSN2060**
3550 S, 3553 S	OM 440.975, OM 440.976, OM 442.993, OM 442.997	362 370	05/1992 → 09/1996		5,4	24	063524160020	**MSN2060**
3553 S	OM 446.933	390	01/1996 → 09/1996		5,4	24	063524160020	**MSN2060**
3553, 3553 L	OM 446.920	390	01/1996 → 09/1996		5,4	24	063524160020	**MSN2060**
4844	OM 440.970, OM 440.979	320	07/1992 → 08/1994		5,4	24	063524160020	**MSN2060**
4844 K	OM 440.984, OM 446.940	320	07/1992 → 09/1996		5,4	24	063524160020	**MSN2060**
TOURINO (O 510)								
TOURINO	OM 906.962	180	01/2004 →		4,0	24	063522310330	**MSN2049**
TOURINO	OM 906.961	205	01/2004 →		4,0	24	063522310330	**MSN2049**
TOURISMO (O 350)								
Torismo	OM 402.970	280	10/1995 → 09/2006		5,4	24	063524160020	**MSN2060**
Torismo	OM 441.980, OM 445.934	250	10/1995 → 09/2006		5,4	24	063524160020	**MSN2060**
Tourismo	OM 446.938	280	10/1995 → 09/2006		5,4	24	063524160020	**MSN2060**
UNIMOG								
U 1000	OM 353.962	70	06/1984 → 05/1988		3,0	12	063523673030	**MSN2054**
U 1000	OM 356.914, OM 366.915	75	01/1988 → 01/1991		3,0	12	063523673030	**MSN2054**
U 1000	OM 356.914, OM 366.915	75	01/1991 → 12/1992		4,0	24	063523683090	**MSN2059**
U 100L	OM 602.981, OM 602.989	85 90	07/1996 → 09/2001		2,0	12	063521092500	**MSN2025**
U 110,U 110L	OM 364.955, OM 364.958	75 77	07/1992 → 09/1995		3,0	12	063523673030	**MSN2054**
U 1200	OM 353.973, OM 353.995	92	02/1982 → 05/1988		3,0	12	063523673030	**MSN2054**
U 1200	OM 356.950, OM 356.954, OM 366.949	92	01/1988 → 01/1991		3,0	12	063523673030	**MSN2054**

		kW ÷ kW		i	kW	V	MAGNETI MARELLI LONG	MAGNETI MARELLI SHORT
MERCEDES-BENZ								
UNIMOG								
U 1200	OM 353.973, OM 353.995	92	02/1982 → 05/1988		4,0	24	063523683090	**MSN2059**
U 1200	OM 356.950, OM 356.954, OM 366.949	92	09/1991 → 02/2001		4,0	24	063523683090	**MSN2059**
U 1200T	OM 353.973, OM 353.995	92	01/1983 → 05/1988		3,0	12	063523673030	**MSN2054**
U 1200T	OM 356.954, OM 366.949	92	01/1988 → 01/1991		3,0	12	063523673030	**MSN2054**
U 1200T	OM 353.973, OM 353.995	92	01/1983 → 05/1988		4,0	24	063523683090	**MSN2059**
U 1200T	OM 356.954, OM 366.949	92	09/1991 → 02/2001		4,0	24	063523683090	**MSN2059**
U 1250	OM 353.973, OM 353.995	92	12/1984 → 05/1988		3,0	12	063523673030	**MSN2054**
U 1250	OM 353.973, OM 353.995	92	12/1984 → 05/1988		4,0	24	063523683090	**MSN2059**
U 1250,U 1250L	OM 356.950, OM 356.954, OM 366.949	92	01/1988 → 01/1991		3,0	12	063523673030	**MSN2054**
U 1250,U 1250L	OM 356.950, OM 356.954, OM 366.949	92	09/1991 → 02/2001		4,0	24	063523683090	**MSN2059**
U 1250L	OM 366.955	100	05/1988 → 02/2001		4,0	24	063522310030	**MSN2042**
U 1250L	OM 366.955	100	05/1988 → 02/2001		3,0	12	063523673030	**MSN2054**
U 130,U 140	OM 364.982, OM 364.985	98 103	07/1992 → 09/1998		3,0	12	063523673030	**MSN2054**
U 1300	OM 353.973, OM 353.995	92	01/1977 → 12/1984		3,0	12	063523673030	**MSN2054**
U 1300,U 1300L	OM 353.961, OM 353.973	92 96	01/1977 → 05/1988		3,0	12	063523673030	**MSN2054**
U 1350L	OM 366.955	100	05/1988 → 02/2001		4,0	24	063522310030	**MSN2042**
U 1350L	OM 366.955	100	05/1988 → 02/2001		3,0	12	063523673030	**MSN2054**
U 1400	OM 357.912, OM 366.947, OM 366.948, OM 366.955, OM 366.956	100	01/1994 → 04/2000		4,0	24	063522310030	**MSN2042**
U 1400	OM 357.912, OM 366.947, OM 366.948, OM 366.955, OM 366.956	100	01/1988 → 04/2000		3,0	12	063523673030	**MSN2054**
U 140L	OM 364.985	100 103	07/1992 →		4,0	24	063522310030	**MSN2042**
U 140L	OM 364.985	100 103	05/1993 → 09/1998		3,0	12	063523673030	**MSN2054**
U 140T	OM 364.982	98	07/1992 → 09/1995		3,0	12	063523673030	**MSN2054**

		kW ÷ kW		i	kW	V	LONG	SHORT
MERCEDES-BENZ								
UNIMOG								
U 1450,U 1450L	OM 357.912, OM 366.947, OM 366.948, OM 366.955, OM 366.956	100	01/1994 →		3,0	12	063523673030	**MSN2054**
U 1450,U 1450L	OM 357.912, OM 366.947, OM 366.948, OM 366.955, OM 366.956	100	01/1991 → 04/2000		4,0	24	063523683090	**MSN2059**
U 1500	OM 353.958	110	01/1977 → 05/1988		3,0	12	063523673030	**MSN2054**
U 1500T	OM 353.958	110	01/1977 → 05/1988		3,0	12	063523673030	**MSN2054**
U 1550	OM 353.958	110	01/1986 → 05/1988		3,0	12	063523673030	**MSN2054**
U 1550 L	OM 353.961, OM 353.995	92 96	02/1986 → 05/1988		3,0	12	063523673030	**MSN2054**
U 1550L	OM 366.955, OM 366.956	100	05/1988 → 04/2000		4,0	24	063522310030	**MSN2042**
U 1550L	OM 366.963	125	01/1992 → 04/2000	325961 →	4,0	24	063522310030	**MSN2042**
U 1550L	OM 356.980, OM 357.945	177	03/1990 → 04/2000		4,0	24	063522310030	**MSN2042**
U 1550L	OM 356.956	115	01/1992 → 04/2000		4,0	24	063522310030	**MSN2042**
U 1550L	OM 356.997, OM 357.924, OM 366.984	150 157	05/1988 → 04/2000	325961 →	4,0	24	063522310030	**MSN2042**
U 1550L	OM 356.955, OM 356.956	114	01/1992 → 04/2000		4,0	24	063522310030	**MSN2042**
U 1550L	OM 366.955, OM 366.956	100	05/1988 → 04/2000		3,0	12	063523673030	**MSN2054**
U 1550L	OM 356.980, OM 357.945	177	03/1990 → 04/2000		3,0	12	063523673030	**MSN2054**
U 1550L	OM 366.963	125	01/1992 → 04/2000		3,0	12	063523673030	**MSN2054**
U 1550L	OM 356.997, OM 357.924, OM 366.984	150 157	05/1988 → 04/2000		3,0	12	063523673030	**MSN2054**
U 1550L	OM 356.997, OM 357.924, OM 366.984	150 157	05/1988 → 04/2000	→325960	4,0	24	063523683090	**MSN2059**
U 1550L	OM 366.963	125	01/1992 → 04/2000	→325960	4,0	24	063523683090	**MSN2059**
U 1600	OM 356.980, OM 357.945	177	05/1991 → 09/2002		4,0	24	063522310030	**MSN2042**
U 1600	OM 356.997, OM 357.924, OM 366.984	150 157	11/1992 → 09/2002		4,0	24	063522310030	**MSN2042**
U 1600	OM 356.980, OM 357.945	177	05/1991 → 09/2002		3,0	12	063523673030	**MSN2054**
U 1600	OM 356.956, OM 366.949	115	01/1988 → 01/1991		3,0	12	063523673030	**MSN2054**

		kW ÷ kW		i	kW	V	LONG	SHORT
MERCEDES-BENZ								
UNIMOG								
U 1600	OM 356.956, OM 366.949	115	01/1991 → 04/2000		4,0	24	063523683090	**MSN2059**
U 1650,U 1650L	OM 356.980, OM 357.945	177	05/1991 → 02/2001		4,0	24	063522310030	**MSN2042**
U 1650,U 1650L	OM 356.997, OM 357.924, OM 366.984	150 157	09/1989 → 02/2001	325961 →	4,0	24	063522310030	**MSN2042**
U 1650,U 1650L	OM 356.956, OM 366.948, OM 366.949	115	01/1988 → 02/2001		3,0	12	063523673030	**MSN2054**
U 1650,U 1650L	OM 356.980, OM 357.945	177	05/1991 → 02/2001		3,0	12	063523673030	**MSN2054**
U 1650,U 1650L	OM 356.956, OM 366.948, OM 366.949	115	01/1991 → 04/2000		4,0	24	063523683090	**MSN2059**
U 1650,U 1650L	OM 356.997, OM 357.924, OM 366.984	150 157	09/1989 → 02/2001	→325960	4,0	24	063523683090	**MSN2059**
U 1700	OM 356.957, OM 366.963, OM 382.950	122 125	01/1992 → 02/2001		4,0	24	063522310030	**MSN2042**
U 1700,U 1700L	OM 353.959	124	05/1978 → 09/1988		3,0	12	063523673030	**MSN2054**
U 1700L	OM 353.959	124	05/1978 → 09/1988		3,0	12	063523673030	**MSN2054**
U 1700T	OM 356.957, OM 366.963	122 125	09/1988 → 02/2001	325961 →	4,0	24	063522310030	**MSN2042**
U 1700T	OM 356.957, OM 366.963	122 125	09/1988 → 02/2001		3,0	12	063523673030	**MSN2054**
U 1700T	OM 356.957, OM 366.963	122 125	09/1988 → 02/2001	→325960	4,0	24	063523683090	**MSN2059**
U 1750,U 1750L	OM 356.957, OM 356.981, OM 366.963	122 127	09/1988 → 02/2001	325961 →	4,0	24	063522310030	**MSN2042**
U 1750,U 1750L	OM 356.957, OM 356.981, OM 366.963	122 127	09/1988 → 02/2001		3,0	12	063523673030	**MSN2054**
U 1750,U 1750L	OM 356.957, OM 356.981, OM 366.963	122 127	09/1988 → 02/2001	→325960	4,0	24	063523683090	**MSN2059**
U 1800	OM 356.998	132	04/1992 → 08/2002		4,0	24	063522310030	**MSN2042**
U 1800T	OM 356.998	132	04/1992 → 08/2002		4,0	24	063522310030	**MSN2042**
U 1850,U 1850L	OM 356.998	132	04/1992 → 08/2002		4,0	24	063522310030	**MSN2042**
U 2100	OM 356.997, OM 366.984	155 157	09/1989 → 02/2001		4,0	24	063522310030	**MSN2042**
U 2100	OM 356.997, OM 366.984	155 157	09/1989 → 02/2001		3,0	12	063523673030	**MSN2054**
U 2100T	OM 356.997, OM 366.984	155 157	01/1992 → 02/2001		4,0	24	063522310030	**MSN2042**

		kW ÷ kW		i	kW	V	LONG	SHORT
MERCEDES-BENZ								
UNIMOG								
U 2100T	OM 356.997, OM 366.984	155 157	09/1989 → 02/2001		3,0	12	063523673030	**MSN2054**
U 2150	OM 356.997, OM 366.984	155 157	09/1989 → 02/2001		4,0	24	063522310030	**MSN2042**
U 2150	OM 356.997, OM 366.984	155 157	05/1991 → 02/2001		3,0	12	063523673030	**MSN2054**
U 2150,U 2150L	OM 356.980, OM 357.945	177	05/1991 → 02/2001		4,0	24	063522310030	**MSN2042**
U 2150,U 2150L	OM 356.997, OM 357.924, OM 366.984	155 157	05/1991 → 02/2001		4,0	24	063522310030	**MSN2042**
U 2150,U 2150L	OM 356.980, OM 357.945	177	05/1991 → 08/2002		3,0	12	063523673030	**MSN2054**
U 2150,U 2150L	OM 356.997, OM 357.924, OM 366.984	155 157	05/1991 → 02/2001		3,0	12	063523673030	**MSN2054**
U 2400	OM 356.980, OM 357.945	177	05/1991 → 08/2002		4,0	24	063522310030	**MSN2042**
U 2400	OM 356.980, OM 357.945	177	05/1991 → 08/2002		3,0	12	063523673030	**MSN2054**
U 2400TG	OM 356.980, OM 357.945	177	07/1993 → 08/2002		4,0	24	063522310030	**MSN2042**
U 2400TG	OM 356.980, OM 357.945	177	07/1993		3,0	12	063523673030	**MSN2054**
U 2450,U 2450L	OM 356.980, OM 357.945	177	07/1993 → 08/2002		4,0	24	063522310030	**MSN2042**
U 2450,U 2450L	OM 356.980, OM 357.945	177	07/1993 → 08/2002		3,0	12	063523673030	**MSN2054**
U 2450L	OM 356.980, OM 357.945	177	07/1993 → 08/2002		4,0	24	063522310030	**MSN2042**
U 2450L	OM 356.980, OM 357.945	177	07/1993 → 08/2002		3,0	12	063523673030	**MSN2054**
U 300	OM 904.928	130	04/2000 →		4,0	24	063522310330	**MSN2049**
U 3000	OM 904.952	130	09/2002 →		4,0	24	063522310330	**MSN2049**
U 3000	OM 900.920, OM 904.953	110 115	09/2006 →		4,0	24	063522310330	**MSN2049**
U 400	OM 904.928	130	04/2000 →		4,0	24	063522310330	**MSN2049**
U 400	OM 906.935	170	04/2000 →		4,0	24	063522310330	**MSN2049**
U 4000	OM 900.920, OM 904.953	110 115	09/2002 →		4,0	24	063522310330	**MSN2049**
U 4000	OM 924.916, OM 924.923	160	09/2006 →		4,0	24	063522310330	**MSN2049**
U 500, UGN NA	OM 906.935	170 172	02/2001 →		4,0	24	063522310330	**MSN2049**
U 500, UGN NA	OM 906.955, OM 906.967	205 209	02/2001 →		4,0	24	063522310330	**MSN2049**
U 5000	OM 924.916, OM 924.923	160	03/2003 →		4,0	24	063522310330	**MSN2049**

		kW ÷ kW			kW	V	LONG	SHORT
MERCEDES-BENZ								
UNIMOG								
U 5000	OM 906.935	170	03/2003 →		4,0	24	063522310330	**MSN2049**
U 66, U 72	OM 314.917	55	09/1973 → 12/1975		3,0	12	063523673030	**MSN2054**
U 90	OM 602.981, OM 602.989	85 90	07/1996 → 09/2001		2,0	12	063521092500	**MSN2025**
U300	OM 904.927	110	04/2000 →		4,0	24	063522310330	**MSN2049**
UX 100H,UX 100M	OM 602.981, OM 602.989	80 90	09/1996 →		2,0	12	063521092500	**MSN2025**
NISSAN MOTOR IBERICA								
185								
Tutte			01/1975 → 12/1978		2,8	12	063227599010	**MSN541**
OM								
Light Trucks								
130 - R/T	CP3/42..		02/1973 → 12/1980		4,0	24	063216733010	**MSN214**
50	CO3/41..		01/1973 → 06/1977		4,0	24	063216733010	**MSN214**
50 - C/N/L	CO3/41..,41..		01/1972 → 12/1981		4,0	24	063216733010	**MSN214**
55	CO3/41..		01/1973 → 06/1977		4,0	24	063216733010	**MSN214**
55 - C/N	CO3/41..		01/1972 → 12/1981		4,0	24	063216733010	**MSN214**
65	CO3/41..		01/1973 → 06/1977		4,0	24	063216733010	**MSN214**
70	CO3/41..		01/1973 → 06/1977		4,0	24	063216733010	**MSN214**
75	CO3/41..		01/1973 → 06/1977		4,0	24	063216733010	**MSN214**
80	CO3/7.200		01/1973 → 12/1981		4,0	24	063216733010	**MSN214**
90	CO3/7.300		01/1973 → 12/1981		4,0	24	063216733010	**MSN214**
90	CO3/7.200		01/1973 → 12/1981		4,0	24	063216733010	**MSN214**
RENAULT TRUCKS								
Series Diesel - 50								
Tutte			01/1979 →		2,2	12	063227486010	**MSN180**
Tutte			01/1979 →		2,8	12	063227592010	**MSN203**
SCANIA								
94 L								
94 L/310		228	08/1996 →		4,0	24	063523683010	**MSN2058**
SCHANZLIN								
TRACTOR								
Gigant 300 K Traktor	MWM-D325-2		04/1970 → 12/1988		3,5	12	063296843010	**MSN887**
Gigant 300 K Traktor	MWM-D325-2		04/1970 → 12/1988		2,4	12	063523620760	**MSN2051**
SCHILTER								
TRACTOR								
1300	D302-2		06/1976 → 03/1980		3,5	12	063296843010	**MSN887**
SETRA								
Series 300								
S 315 HD, S 315 HDH		280	03/1995 → 07/2001		5,4	24	063524160020	**MSN2060**
S 317 HD, S 317 HDH		320	03/1995 → 07/2001		5,4	24	063524160020	**MSN2060**
S 328 DT		385	03/1995 → 02/2002		5,4	24	063524160020	**MSN2060**

Applicazione per marca e veicolo
Vehicle application guide
Zuordnung nach Marke und Fahrzeug
Affectations par marques et véhicules
Aplicación por marca y vehículo
Aplicação por marca e veículo
ρμογή ανά μο
Zastosowanie dla marki i pojazdu
Marka ve araca göre uygulama

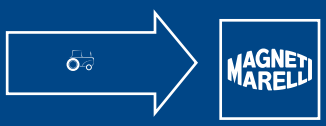

					kW	V	LONG	SHORT
ACME								
ADN	37/2VW		01/1981 →		1,1	12	063521070240	**MSN2010**
ADN	37VW		01/1981 →		1,1	12	063521070240	**MSN2010**
ADN	37W		01/1979 →		1,1	12	063521070240	**MSN2010**
ADN	45		01/1979 →		1,1	12	063521070240	**MSN2010**
ADN	48W		01/1979 →		1,1	12	063521070240	**MSN2010**
ADN	54W		01/1979 →		1,1	12	063521070240	**MSN2010**
ADN	60W		01/1979 →		1,1	12	063521070240	**MSN2010**
ADIM								
1000.3 - AT/W	Tutte		→		3,5	12	063216884010	**MSN878**
1000.4 - AT/ ATI/W/WT	Tutte		→		3,5	12	063216884010	**MSN878**
1000.6 - AT/ATI/ W/WT/WTI/WTR	Tutte		→		3,5	12	063216884010	**MSN878**
1053 - P	Tutte		→		3,5	12	063216884010	**MSN878**
1054 - P/PT	Tutte		→		3,5	12	063216884010	**MSN878**
1055 - P	Tutte		→		3,5	12	063216884010	**MSN878**
1056 - P/PS/PT/ PTI	Tutte		→		3,5	12	063216884010	**MSN878**
AGCO								
4660	AWD - 2WD	Same-105.3P	05/1991 →		3,5	12	063216884010	**MSN878**
8610	AWD - CA	Same-1000.6A	05/1991 →		3,5	12	063216884010	**MSN878**
8630	AWD - CA	Same-1000.6AT	05/1991 →		3,5	12	063216884010	**MSN878**
AGRIFULL								
100 DT	Tutte		08/1985 →		3,5	12	063216896010	**MSN224**
100 DT	Tutte		08/1985 →		3,0	12	063522300090	**MSN2040**
110 DT	Tutte		05/1986 →		3,5	12	063216896010	**MSN224**
110 DT	Tutte		05/1986 →		3,0	12	063522300090	**MSN2040**
140 DT	Tutte		05/1985 →		3,5	12	063216896010	**MSN224**
140 DT	Tutte		05/1985 →		3,0	12	063522300090	**MSN2040**
SERIE 40	45DT	8035.06.323	02/1987 → 01/2005		2,6	12	063522235040	**MSN2036**
SERIE 40	45DT	8035.06.220,222	02/1987 → 05/2005		2,6	12	063522235040	**MSN2036**
SERIE 45	45 - 66RM-DT	8035.06.321	01/1990 →		2,5	12	063217126010	**MSN227**
SERIE 45	45 - 66RM-DT	8035.06.321	01/1990 →		3,0	12	063523620390	**MSN2050**
SERIE 45	DT	8035.06.220,222,323	02/1987 →		2,5	12	063217126010	**MSN227**
SERIE 45	DT	8035.06.220,222,323	02/1987 →		3,0	12	063523620390	**MSN2050**
SERIE 50	50	8035.06.320,321	07/1986 →		2,5	12	063217126010	**MSN227**
SERIE 50	50	8035.06.320,321	07/1986 →		3,0	12	063523620390	**MSN2050**
SERIE 50	50 - DT	8035.06.321	01/1990 →		2,5	12	063217126010	**MSN227**
SERIE 50	50 - DT	8035.06.220	07/1986 →		2,5	12	063217126010	**MSN227**
SERIE 50	50 - DT	8035.06.321	01/1990 →		3,0	12	063523620390	**MSN2050**
SERIE 50	50 - DT	8035.06.220	07/1986 →		3,0	12	063523620390	**MSN2050**
SERIE 50	50DT	8035.06.220/320/321	07/1987 → 01/2005		2,6	12	063522235040	**MSN2036**
SERIE 500	500 Frutteto / Vigneto	8035.04.378	09/1980 → 12/1983		2,6	12	063522235040	**MSN2036**

					kW	V	LONG	SHORT
AGRIFULL								
SERIE 55	55	8035.06.306	03/1985 → 12/1989		2,5	12	063217126010	**MSN227**
SERIE 55	55	8035.06.306	03/1985 → 12/1989		3,0	12	063523620390	**MSN2050**
SERIE 55	55 - 85M/V	8035.06.208	09/1992 →		2,5	12	063217126010	**MSN227**
SERIE 55	55 - 85M/V	8035.06.208	09/1992 →		3,0	12	063523620390	**MSN2050**
SERIE 55	55 - 86F/V	8035.06.222,223	09/1992 →		2,5	12	063217126010	**MSN227**
SERIE 55	55 - 86F/V	8035.06.222,223	09/1992 →		3,0	12	063523620390	**MSN2050**
SERIE 55	55 - DT	8035.06.206	03/1985 →		2,5	12	063217126010	**MSN227**
SERIE 55	55 - DT	8035.06.206	03/1985 →		3,0	12	063523620390	**MSN2050**
SERIE 55	55 C Vigneto - DT Frutteto	8035.06.206/208/222/306	03/1985 → 05/2005		2,6	12	063522235040	**MSN2036**
SERIE 55	C Vigneto	8035.06.308	03/1985 → 12/1989		2,5	12	063217126010	**MSN227**
SERIE 55	C Vigneto	8035.06.208	03/1985 →		2,5	12	063217126010	**MSN227**
SERIE 55	C Vigneto	8035.06.309	01/1990 →		2,5	12	063217126010	**MSN227**
SERIE 55	C Vigneto	8035.06.208	03/1985 →		3,0	12	063523620390	**MSN2050**
SERIE 55	C Vigneto	8035.06.309	01/1990 →		3,0	12	063523620390	**MSN2050**
SERIE 55	C Vigneto	8035.06.308	03/1985 → 12/1989		3,0	12	063523620390	**MSN2050**
SERIE 55	DT Frutteto	8035.06.222	04/1985 → 12/1989		2,5	12	063217126010	**MSN227**
SERIE 55	DT Frutteto	8035.06.323	01/1990 →		2,5	12	063217126010	**MSN227**
SERIE 55	DT Frutteto	8035.06.323	01/1990 →		3,0	12	063523620390	**MSN2050**
SERIE 55	DT Frutteto	8035.06.222	04/1985 → 12/1989		3,0	12	063523620390	**MSN2050**
SERIE 55	DT Vigneto	8035.06.222	06/1987 →		2,5	12	063217126010	**MSN227**
SERIE 55	DT Vigneto	8035.06.222	06/1987 →		3,0	12	063523620390	**MSN2050**
SERIE 55	Vigneto	8035.06.222	04/1985 →		2,5	12	063217126010	**MSN227**
SERIE 55	Vigneto	8035.06.222	04/1985 →		3,0	12	063523620390	**MSN2050**
SERIE 570	570 Frutteto / Vigneto	Fiat-8035.04.378	09/1980 → 12/1983		2,5	12	063217126010	**MSN227**
SERIE 570	570 Frutteto / Vigneto	Fiat-8035.04.378	09/1980 → 12/1983		3,0	12	063523620390	**MSN2050**
SERIE 60	60 - 85F/V	8035.05.208,309	09/1992 →		2,5	12	063217126010	**MSN227**
SERIE 60	60 - 85F/V	8035.05.208,309	09/1992 →		3,0	12	063523620390	**MSN2050**
SERIE 60	60 - 86F/V	8035.05.208,309	09/1992 →		2,5	12	063217126010	**MSN227**
SERIE 60	60 - 86F/V	8035.05.208,309	09/1992 →		3,0	12	063523620390	**MSN2050**
SERIE 60	60 - C	8035.05.206	03/1985 →		2,5	12	063217126010	**MSN227**
SERIE 60	60 - C	8035.05.206	03/1985 →		3,0	12	063523620390	**MSN2050**
SERIE 60	60 - CL	8035.05.307	01/1990 →		2,5	12	063217126010	**MSN227**
SERIE 60	60 - CL	8035.05.306	03/1985 → 12/1989		2,5	12	063217126010	**MSN227**
SERIE 60	60 - CL	8035.05.307	01/1990 →		3,0	12	063523620390	**MSN2050**
SERIE 60	60 - CL	8035.05.306	03/1985 → 12/1989		3,0	12	063523620390	**MSN2050**
SERIE 60	60 - LM	8035.05.206,306	09/1987 → 12/1990		2,5	12	063217126010	**MSN227**
SERIE 60	60 - LM	8035.05.206,306	09/1987 → 12/1990		3,0	12	063523620390	**MSN2050**
SERIE 60	60 - LM/DT	8035.05.206,306	01/1991 →		2,5	12	063217126010	**MSN227**
SERIE 60	60 - LM/DT	8035.05.206,306	01/1991 →		3,0	12	063523620390	**MSN2050**
SERIE 60	C/CL/DT Frutteto	8035.05.206/306/208/307/308	03/1985 → 01/2006		2,6	12	063522235040	**MSN2036**
SERIE 60	DT Frutteto	8035.05.309	01/1990 →		2,5	12	063217126010	**MSN227**

					kW	V	LONG	SHORT
AGRIFULL								
SERIE 60	DT Frutteto	8035.05.308	03/1985 → 12/1989		2,5	12	063217126010	**MSN227**
SERIE 60	DT Frutteto	8035.05.308	03/1985 → 12/1989		3,0	12	063523620390	**MSN2050**
SERIE 60	DT Frutteto	8035.05.309	01/1990 →		3,0	12	063523620390	**MSN2050**
SERIE 60	Frutteto	8035.05.208	03/1985 →		2,5	12	063217126010	**MSN227**
SERIE 60	Frutteto	8035.05.208	03/1985 →		3,0	12	063523620390	**MSN2050**
SERIE 65	65	8045.06.320	03/1985 → 12/1989		3,5	12	063216831010	**MSN219**
SERIE 65	65 - DT	8045.06.220	03/1985 →		3,5	12	063216831010	**MSN219**
SERIE 65	65 - LM	8045.06.321	01/1990 →		3,5	12	063216831010	**MSN219**
SERIE 66	66 DT	8035.06.220,320	01/1985 →		2,5	12	063217126010	**MSN227**
SERIE 66	66 DT	8035.06.220,320	01/1985 →		3,0	12	063523620390	**MSN2050**
SERIE 670	Tutte	Fiat-8045.02.378	09/1980 → 12/1984		3,5	12	063216831010	**MSN219**
SERIE 70	70	8045.06.208,309	09/1992 →		3,5	12	063216831010	**MSN219**
SERIE 70	70	8045.06.307	01/1990 →		3,5	12	063216831010	**MSN219**
SERIE 70	70	8045.06.206	10/1984 →		3,5	12	063216831010	**MSN219**
SERIE 70	70 - C	8045.06.307	01/1990 →		3,5	12	063216831010	**MSN219**
SERIE 70	70 - C	8045.06.306	03/1985 → 12/1989		3,5	12	063216831010	**MSN219**
SERIE 70	70 - C/L	8045.06.206	03/1985 →		3,5	12	063216831010	**MSN219**
SERIE 70	A - 70LM	8045.06.206,307	01/1990 →		3,5	12	063216831010	**MSN219**
SERIE 70	DT Frutteto	8045.06.208	03/1985 →		3,5	12	063216831010	**MSN219**
SERIE 70	Frutteto	8045.06.309	01/1990 →		3,5	12	063216831010	**MSN219**
SERIE 70	Frutteto	8045.06.308	03/1985 → 12/1989		3,5	12	063216831010	**MSN219**
SERIE 80	80	8045.05.206,306	10/1984 → 12/1989		3,5	12	063216831010	**MSN219**
SERIE 80	80	8045.05.207,307	01/1990 →		3,5	12	063216831010	**MSN219**
SERIE 80	80 - 46	8035.02.276	03/1984 → 12/1984		2,5	12	063217126010	**MSN227**
SERIE 80	80 - 46	8035.02.276	03/1984 → 12/1984		3,0	12	063523620390	**MSN2050**
SERIE 80	80 - 56	8035.04.376	04/1984 → 12/1984		2,5	12	063217126010	**MSN227**
SERIE 80	80 - 56	MWM-D227-3	04/1982 → 06/1983		3,5	12	063296843010	**MSN887**
SERIE 80	80 - 56	8035.04.376	04/1984 → 12/1984		3,0	12	063523620390	**MSN2050**
SERIE 80	80 - 56	MWM-D227-3	04/1982 → 06/1983		2,4	12	063523620760	**MSN2051**
SERIE 80	80 - 56DT	MWM-D227-3	04/1982 → 06/1983		3,5	12	063296843010	**MSN887**
SERIE 80	80 - 56DT	MWM-D227-3	04/1982 → 06/1983		2,4	12	063523620760	**MSN2051**
SERIE 80	80 - 66	8045.02.276	03/1984 → 12/1984		3,5	12	063216831010	**MSN219**
SERIE 80	80 - 76	8045.04.276	03/1984 → 12/1984		3,5	12	063216831010	**MSN219**
SERIE 80	80 - C	8045.05.207,307	01/1990 →		3,5	12	063216831010	**MSN219**
SERIE 80	80 - C	8045.05.206,306	03/1985 → 12/1989		3,5	12	063216831010	**MSN219**
SERIE 80	80 - DTF	8045.05.308	09/1986 → 12/1989		3,5	12	063216831010	**MSN219**
SERIE 80	80 - DTF	8045.05.309	01/1990 →		3,5	12	063216831010	**MSN219**
SERIE 80	80 - F	8045.05.208	09/1986 → 12/1989		3,5	12	063216831010	**MSN219**
SERIE 80	80 - F	8045.05.209	01/1990 →		3,5	12	063216831010	**MSN219**
SERIE 80	80 - SERIE 70	Fiat-8045.02.211	09/1980 → 03/1983		3,5	12	063216831010	**MSN219**
SERIE 80	80 - SERIE 70	Fiat-8045.02.278	09/1980 → 12/1984		3,5	12	063216831010	**MSN219**
SERIE 80	80.46	8035.02.276	03/1984 → 12/1984		2,6	12	063522235040	**MSN2036**
SERIE 80	80.56	8035. 04.376	04/1984 → 12/1984		2,6	12	063522235040	**MSN2036**
SERIE 80	82 - 86F	8045.05.208,309	06/1992 →		3,5	12	063216831010	**MSN219**
SERIE 90	90 DT		05/1985 →		3,5	12	063216896010	**MSN224**

					kW	V	LONG	SHORT
ANADOLU								
SERIE 90	90 DT		05/1985 →		3,0	12	063522300090	**MSN2040**
D 510	Tutte		→		1,1	12	063521070240	**MSN2010**
ARONA								
AD - 178M	Tutte		01/1978 → 12/1980		1,1	12	063521070240	**MSN2010**
AD - 182L	Tutte		12/1981 → 12/1988		1,1	12	063521070240	**MSN2010**
AD - 182M	Tutte		08/1978 → 12/1988		1,1	12	063521070240	**MSN2010**
AD - 185M	Tutte		01/1978 → 12/1988		1,1	12	063521070240	**MSN2010**
ATLAS (H.WEYHAUSEN KG)								
D3152	Tutte		01/1970 → 01/1975		2,2	12	063227486010	**MSN180**
D3152	Tutte		01/1970 → 01/1975		2,8	12	063227592010	**MSN203**
ATLAS COPCO								
COMPRESOR	Tutte		01/1975 →		2,2	12	063227486010	**MSN180**
COMPRESOR	Tutte		01/1975 →		2,8	12	063227592010	**MSN203**
AVELING BARFORD								
ROAD ROLLER	GC4,GD4		01/1972 → 01/1976		2,8	12	063227569010	**MSN202**
ROAD ROLLER	GN		01/1965 → 01/1979		2,8	12	063227569010	**MSN202**
ROAD ROLLER	PM20		01/1977 → 01/1978		2,8	12	063227569010	**MSN202**
ROAD ROLLER	PR15		01/1977 → 01/1978		2,8	12	063227569010	**MSN202**
ROAD ROLLER	PTR		01/1972 → 01/1976		2,8	12	063227569010	**MSN202**
ROAD ROLLER	TR		01/1965 → 01/1979		2,8	12	063227569010	**MSN202**
ROAD ROLLER	VP VIBRA-TORY		01/1969 → 01/1973		2,8	12	063227569010	**MSN202**
ROAD ROLLER	VS		01/1969 → 01/1973		2,8	12	063227569010	**MSN202**
ROAD ROLLER	VSA-VXC011		01/1977 →		2,8	12	063227569010	**MSN202**
BARBER GREENE								
Asphalt Finisher	SA141		01/1976 →		2,8	12	063227569010	**MSN202**
Asphalt Finisher	SB30		01/1976 →		2,8	12	063227569010	**MSN202**
Hydrostatic Finisher	SA - 141/131/140	Hydrostatic Finisher	01/1976 →		2,2	12	063227486010	**MSN180**
Hydrostatic Finisher	SA - 141/131/140	Hydrostatic Finisher	01/1976 →		2,8	12	063227592010	**MSN203**
Hydrostatic Finisher	SB131		01/1976 →		2,8	12	063227569010	**MSN202**
Hydrostatic Finisher	SB140		01/1976 →		2,8	12	063227569010	**MSN202**
BCS								
SERIE 200	270	3LD510	03/1992 →		1,1	12	063521070240	**MSN2010**
SERIE 300	303	ADN 45	06/1978 →		1,1	12	063521070240	**MSN2010**
SERIE 300	303	3LD510	03/1992 →		1,1	12	063521070240	**MSN2010**
SERIE 300	303	3LD450	03/1992 →		1,1	12	063521070240	**MSN2010**
SERIE 600	603	LOMB.-6LD400	03/1992 →		1,1	12	063521070240	**MSN2010**
SERIE 600	622	ADN 45	01/1968 →		1,1	12	063521070240	**MSN2010**
SERIE 700	701	3LD510	03/1992 →		1,1	12	063521070240	**MSN2010**
SERIE 700	701	ADN 45	12/1975 → 12/1985		1,1	12	063521070240	**MSN2010**
SERIE 700	705	RD 901	06/1972 → 12/1978		1,1	12	063521070240	**MSN2010**

					kW	V	LONG	SHORT
BCS								
SERIE 700	715	6 LD 400	12/1972 → 10/1991		1,1	12	063521070240	**MSN2010**
SERIE 700	735	RD 81	06/1978 → 12/1980		1,1	12	063521070240	**MSN2010**
SERIE 700	735	ADN 37	06/1978 → 12/1987		1,1	12	063521070240	**MSN2010**
SERIE 700	735	6LD400	03/1992 →		1,1	12	063521070240	**MSN2010**
SERIE 700	737	6 LD 400	01/1989 →		1,1	12	063521070240	**MSN2010**
SERIE 700	745	ADN 54 W	01/1984 →		1,1	12	063521070240	**MSN2010**
SERIE 700	745	3LD510	03/1992 →		1,1	12	063521070240	**MSN2010**
SERIE 700	755	RD 901	12/1985 → 12/1986		1,1	12	063521070240	**MSN2010**
SERIE 700	755	3 LD 510	12/1985 → 12/1986		1,1	12	063521070240	**MSN2010**
BENFRA								
MOVIMENTO TERRA	1.15	Iveco-8031I05.00	07/1987 → 06/1990		2,5	12	063217126010	**MSN227**
MOVIMENTO TERRA	1.15	Iveco-8031I00S	07/1990 →		2,5	12	063217126010	**MSN227**
MOVIMENTO TERRA	1.15	Iveco-8031I00S	07/1990 →		3,0	12	063523620390	**MSN2050**
MOVIMENTO TERRA	1.15	Iveco-8031I05.00	07/1987 → 06/1990		3,0	12	063523620390	**MSN2050**
MOVIMENTO TERRA	1.45	Aifo-8041SI25	06/1989 →		3,5	12	063216831010	**MSN219**
MOVIMENTO TERRA	1-6 1.5	Iveco 8031 I 005	07/1990 → 07/2005		2,6	12	063522235040	**MSN2036**
MOVIMENTO TERRA	1-6 1.5	Iveco 8031 I 05.00	07/1987 → 06/1990		2,6	12	063522235040	**MSN2036**
MOVIMENTO TERRA	215	Aifo-8031I002	01/1979 → 06/1985		3,5	12	063216831010	**MSN219**
MOVIMENTO TERRA	4.11	Aifo-8041SI25	01/1989 →		3,5	12	063216831010	**MSN219**
MOVIMENTO TERRA	7.07	Aifo-8041SI25	01/1989 → 04/1991		3,5	12	063216831010	**MSN219**
MOVIMENTO TERRA	9.09 - CH	Aifo-8061SI25	10/1985 → 04/1991		3,5	12	063216831010	**MSN219**
MOVIMENTO TERRA	9.10 - CH	Aifo-8061SI25	02/1985 → 04/1991		3,5	12	063216831010	**MSN219**
BERTOLINI								
100-SERIE	124D	LOMB.-3LD450	03/1992 →		1,1	12	063521070240	**MSN2010**
124 D	Tutte	Ruggerini-RF 120	01/1986 →		1,1	12	063521070240	**MSN2010**
300-SERIE	310S	LOMB.-3LD510	03/1992 →		1,1	12	063521070240	**MSN2010**
300-SERIE	312	LOMB.-6LD360	03/1992 →		1,1	12	063521070240	**MSN2010**
300-SERIE	318	LOMB.-3LD510	03/1992 →		1,1	12	063521070240	**MSN2010**
303	Tutte	Acme-ADN 45	06/1978 → 12/1986		1,1	12	063521070240	**MSN2010**
306	Tutte	Lomb.-6 LD 360	01/1980 → 04/1991		1,1	12	063521070240	**MSN2010**
306	Tutte	Lomb.-530	01/1980 → 12/1981		1,1	12	063521070240	**MSN2010**
308	Tutte	Lomb.-LDA 530	06/1980 → 12/1981		1,1	12	063521070240	**MSN2010**
308	Tutte	Lomb.-6 LD 360	12/1981 → 06/1991		1,1	12	063521070240	**MSN2010**

					kW	V	LONG	SHORT
BERTOLINI								
310S	Tutte	Ruggerini RD901/RF130	10/1969 →		1,1	12	063521070240	**MSN2010**
312	Tutte	Acme-ADN 37/2	07/1990 →		1,1	12	063521070240	**MSN2010**
315	Tutte	Lomb.-LDA 3 LD 450	01/1970 → 07/1989		1,1	12	063521070240	**MSN2010**
315	Tutte	Ruggerini-RD 901	01/1970 → 03/1983		1,1	12	063521070240	**MSN2010**
315	Tutte	Lomb.-3 LD 510	07/1971 → 07/1989		1,1	12	063521070240	**MSN2010**
315	Tutte	Ruggerini-RD 920	01/1970 → 03/1983		1,1	12	063521070240	**MSN2010**
318	Tutte	Lomb.-3 LD 450	01/1989 → 12/1991		1,1	12	063521070240	**MSN2010**
400-SERIE	408	6LD360	03/1992 →		1,1	12	063521070240	**MSN2010**
BOMAG								
Tandem Rollers	BW - 135AD	Deutz D2011L3i	→		2,3	12	063522230160	**MSN2035**
Tandem Rollers	BW - 138AD	Deutz D2011L3i	→		2,3	12	063522230160	**MSN2035**
BUHRER								
OS 13	Tutte		01/1971 → 01/1978		2,2	12	063227470010	**MSN184**
OS 13	Tutte		01/1971 → 01/1978		2,2	12	063227488010	**MSN175**
OS 20	Tutte		01/1972 → 01/1973		2,8	12	063227569010	**MSN202**
CASE IH								
1394	Tutte		01/1984 →		2,8	12	063227602010	**MSN199**
1394-2WD	Tutte		01/1984 → 01/1988		2,8	12	063227569010	**MSN202**
1494	Tutte		01/1984 →		2,8	12	063227602010	**MSN199**
1494-2WD	Tutte		01/1984 → 01/1987		2,8	12	063227569010	**MSN202**
1594	Tutte		01/1984 →		2,8	12	063227602010	**MSN199**
1594-2WD	Tutte		01/1984 → 01/1988		2,8	12	063227569010	**MSN202**
1690	Tutte		01/1984 →		2,8	12	063227602010	**MSN199**
1690-2WD/4WD	Tutte		01/1984 → 01/1985		2,8	12	063227569010	**MSN202**
1694	Tutte		01/1984 → 01/1987		2,8	12	063227569010	**MSN202**
1694	Tutte		01/1984 →		2,8	12	063227602010	**MSN199**
1820	Tutte		01/1975 → 03/1997		2,2	12	063227486010	**MSN180**
1820	Tutte		01/1975 → 03/1997		2,8	12	063227592010	**MSN203**
433 V	Tutte	D-155	06/1973 → 12/1985		3,5	12	063296842010	**MSN886**
533A	Tutte	D-155	01/1986 → 12/1990		3,5	12	063296842010	**MSN886**
540	Tutte	D-155	01/1988 → 12/1993		3,5	12	063296842010	**MSN886**
ACCO1820	Tutte		01/1975 → 03/1997		2,2	12	063227486010	**MSN180**
ACCO1820	Tutte		01/1975 → 03/1997		2,8	12	063227592010	**MSN203**
SERIE 500	533V	D-155	06/1973 → 12/1985		3,5	12	063296842010	**MSN886**
SERIE 600	633A	D-179	01/1986 → 12/1990		3,5	12	063296842010	**MSN886**
SERIE 600	633-A/E/V	D-179	01/1975 → 12/1985		3,5	12	063296842010	**MSN886**
SERIE 600	640A	D-179	06/1990 → 12/1993		3,5	12	063296842010	**MSN886**
SERIE 800	833A	D-239	09/1981 → 12/1990		3,5	12	063296842010	**MSN886**
SERIE E	633A	D-179	01/1986 → 12/1990		3,5	12	063296842010	**MSN886**
SERIE E	833A	D-239	01/1986 → 12/1990		3,5	12	063296842010	**MSN886**
SERIE V	433	D-155	01/1986 → 06/1990		3,5	12	063296842010	**MSN886**
SERIE V	533	D-155	01/1986 → 06/1990		3,5	12	063296842010	**MSN886**
SERIE V	633	D-179	01/1986 → 06/1990		3,5	12	063296842010	**MSN886**

					kW	V	LONG	SHORT
CASE IH								
TX36	Tutte		03/1997 →		2,2	12	063227486010	**MSN180**
TX36	Tutte		03/1997 →		2,8	12	063227592010	**MSN203**
CATERPILLAR								
Industriali	Tutte		→		2,2	24	063522190140	**MSN2034**
COMPAIR								
HYDROVANE	152GT		01/1976 →		2,8	12	063227569010	**MSN202**
HYDROVANE	180GT		01/1976 →		2,8	12	063227569010	**MSN202**
HYDROVANE	85DS-100DS		01/1976 →		2,2	12	063227486010	**MSN180**
HYDROVANE	85DS-100DS		01/1976 →		2,8	12	063227592010	**MSN203**
DAVID BROWN (CASE)								
1410-1412	Tutte	455011	→		2,8	12	063227569010	**MSN202**
1594	Tutte	330002	→		2,8	12	063227569010	**MSN202**
1690-1694	Tutte	330001/330102	→		2,8	12	063227569010	**MSN202**
DENNIS								
BULKMASTER	50 Municipal		01/1972 → 01/1979		2,8	12	063227569010	**MSN202**
BULKMASTER	70 Municipal		01/1972 → 01/1979		2,8	12	063227569010	**MSN202**
DOMINANT	Tutte	Perkins 6.354	01/1979 → 12/1979		2,2	12	063227486010	**MSN180**
DOMINANT	Tutte		01/1972 → 01/1979		2,8	12	063227569010	**MSN202**
DOMINANT	Tutte	Perkins 6.354	01/1979 → 12/1979		2,8	12	063227592010	**MSN203**
MUNICIPAL	Tutte	Perkins 6.354	01/1979 →		2,2	12	063227486010	**MSN180**
MUNICIPAL	Tutte	Perkins 6.354	01/1979 →		2,8	12	063227592010	**MSN203**
DEUTZ								
1011 D 2011 L4W	Tutte		→		4,0	24	063522310180	**MSN2046**
2012 L06 4V	Tutte		→		4,0	24	063522310050	**MSN2043**
2013 L06 4V	Tutte		→		4,0	24	063522310050	**MSN2043**
BF 3L 2011	Tutte		→		2,3	12	063522230160	**MSN2035**
BF 3L 914	Tutte	3 cyl	→		4,0	24	063522310050	**MSN2043**
BF 3M 2011	Tutte		→		2,3	12	063522230160	**MSN2035**
BF 4L 1011	Tutte		01/1995 →		2,3	12	063522230160	**MSN2035**
BF 4L 1011 FT	Tutte		→		2,3	12	063522230160	**MSN2035**
BF 4L 2011	Tutte		→		2,3	12	063522230160	**MSN2035**
BF 4L 2011	Tutte		→		4,0	24	063522310050	**MSN2043**
BF 4L 2012	Tutte		→		4,0	24	063522310050	**MSN2043**
BF 4L 914	Tutte	4 cyl	→		4,0	24	063522310050	**MSN2043**
BF 4M 1013	Tutte		→		4,0	24	063522310050	**MSN2043**
BF 4M 2011	Tutte		→		2,3	12	063522230160	**MSN2035**
BF 4M 2012	Tutte		→		4,0	24	063522310050	**MSN2043**
BF 4M 2012 C	Tutte	4 CYL	→		4,0	24	063522310050	**MSN2043**
BF 6L 914 C	Tutte	6 cyl	→		4,0	24	063522310050	**MSN2043**
BF 6M 1013	Tutte		→		4,0	24	063522310050	**MSN2043**
BF 6M 1013 EC	Tutte		→		4,0	24	063522310050	**MSN2043**
BF 6M 2012 C	Tutte	6 CYL	→		4,0	24	063522310050	**MSN2043**
BFM 1015	Tutte		→		4,0	24	063522310050	**MSN2043**
BFM 2011	Tutte		→		4,0	24	063522310180	**MSN2046**

					kW	V	LONG	SHORT
DEUTZ								
D 2.9 L4	Tutte	4-Cyl; III B/Tier 4	→		2,3	12	063522230160	**MSN2035**
D 2011 L2	Tutte		→		2,3	12	063522230160	**MSN2035**
D 2011 L3	Tutte		→		2,3	12	063522230160	**MSN2035**
D 2011 L4	Tutte		→		2,3	12	063522230160	**MSN2035**
D 914 L3	Tutte	3 cyl	→		4,0	24	063522310050	**MSN2043**
D 914 L4	Tutte	4 cyl	→		4,0	24	063522310050	**MSN2043**
D 914 L5	Tutte	5 cyl	→		4,0	24	063522310050	**MSN2043**
D 914 L6	Tutte	6 cyl	→		4,0	24	063522310050	**MSN2043**
F 1L 410	Tutte		03/1968 → 06/1973		3,5	12	063296843010	**MSN887**
F 1L 410	Tutte		03/1968 → 06/1973		2,4	12	063523620760	**MSN2051**
F 2L 201	Tutte		→		2,3	12	063522230160	**MSN2035**
F 2L 411 - D	Tutte		07/1973 → 12/1975		3,5	12	063296843010	**MSN887**
F 2L 411 - D	Tutte		07/1973 → 12/1975		2,4	12	063523620760	**MSN2051**
F 2M 2011	Tutte		→		2,3	12	063522230160	**MSN2035**
F 3L 2011	Tutte		→		2,3	12	063522230160	**MSN2035**
F 3L 914	Tutte	3 cyl	→		4,0	24	063522310050	**MSN2043**
F 3M 1011	Tutte		→		2,3	12	063522230160	**MSN2035**
F 4L 2011	Tutte		→		2,3	12	063522230160	**MSN2035**
F 4L 914	Tutte	4 cyl	→		4,0	24	063522310050	**MSN2043**
F 4M 2011	Tutte		→		2,3	12	063522230160	**MSN2035**
F 5L 914	Tutte	5 cyl	→		4,0	24	063522310050	**MSN2043**
F 6L 914	Tutte	6 cyl	→		4,0	24	063522310050	**MSN2043**
TCD 2011 L4	Tutte	TCD2011 L04	→		2,3	12	063522230160	**MSN2035**
TCD 2011 L4	Tutte	TCD2011 L04	→		4,0	24	063522310180	**MSN2046**
TCD 3.6 L4	Tutte	4-Cyl; III B/Tier 4	→		2,3	12	063522230160	**MSN2035**
TCD 3.6 L4	Tutte	4-Cyl; III B/Tier 4	→		4,0	24	063522310180	**MSN2046**
TCD 914 L6	Tutte	6 cyl	→		4,0	24	063522310050	**MSN2043**
TD 2011 - L4	Tutte		→		2,3	12	063522230160	**MSN2035**
TD 2011 L4W	Tutte		→		4,0	24	063522310180	**MSN2046**
TD 3.6 L4	Tutte	4-Cyl, III B/Tier 4	→		2,3	12	063522230160	**MSN2035**
TD 3.6 L4	Tutte	4-Cyl, III B/Tier 4	→		4,0	24	063522310180	**MSN2046**
TD/TCD2.9L4	Tutte	4-Cyl; III B/Tier 4	→		2,3	12	063522230160	**MSN2035**
DUCATI								
DM	Tutte	182	09/1982 → 06/1990		1,1	12	063521070240	**MSN2010**
DM	Tutte	175	09/1982 → 12/1985		1,1	12	063521070240	**MSN2010**
HD	Tutte	Marino 284	06/1980 → 12/1987		1,1	12	063521070240	**MSN2010**
RH	Tutte	175	01/1983 → 12/1984		1,1	12	063521070240	**MSN2010**
RH	Tutte	186	01/1983 → 12/1985		1,1	12	063521070240	**MSN2010**
RH	Tutte	182	01/1983 → 12/1985		1,1	12	063521070240	**MSN2010**
EICHER								
MAMMUT	Tutte	Perkins 3.152	01/1975 →		2,8	12	063227593010	**MSN540**
FARYMANN (FARNY & WEIDMANN)								
G10	Tutte		01/1972 → 10/1981		3,5	12	063296843010	**MSN887**
G10	Tutte		01/1972 → 10/1981		2,4	12	063523620760	**MSN2051**
G20	Tutte		01/1972 → 10/1981		3,5	12	063296843010	**MSN887**

					kW	V	LONG	SHORT
FARYMANN (FARNY & WEIDMANN)								
G20	Tutte		01/1972 → 10/1981		2,4	12	063523620760	**MSN2051**
FARYMANN DIESEL								
DIESEL ENGINE	71W		04/1977 → 05/1985		3,5	12	063296843010	**MSN887**
DIESEL ENGINE	71W		06/1985 →		3,5	12	063296843010	**MSN887**
DIESEL ENGINE	71W		06/1985 →		2,4	12	063523620760	**MSN2051**
DIESEL ENGINE	71W		04/1977 → 05/1985		2,4	12	063523620760	**MSN2051**
DIESEL ENGINE	71W8		04/1977 → 05/1985		3,5	12	063296843010	**MSN887**
DIESEL ENGINE	71W8		06/1985 →		3,5	12	063296843010	**MSN887**
DIESEL ENGINE	71W8		04/1977 → 05/1985		2,4	12	063523620760	**MSN2051**
DIESEL ENGINE	71W8		06/1985 →		2,4	12	063523620760	**MSN2051**
FENDT								
FARM	1E	D325-2	01/1968 → 05/1974		3,5	12	063296843010	**MSN887**
FARM	1E	D325-2	01/1968 → 05/1974		2,4	12	063523620760	**MSN2051**
FARM	2DE	D208-3	01/1968 → 03/1971		3,5	12	063296843010	**MSN887**
FARM	2DE	D208-3	01/1968 → 03/1971		2,4	12	063523620760	**MSN2051**
FARM	2E	D208-3	01/1968 → 08/1970		3,5	12	063296843010	**MSN887**
FARM	2E	D208-3	01/1968 → 08/1970		2,4	12	063523620760	**MSN2051**
FARM	2N	D208-3	10/1969 → 12/1974		3,5	12	063296843010	**MSN887**
FARM	2N	D208-3	10/1969 → 12/1974		2,4	12	063523620760	**MSN2051**
FARM	2S	D208-3	10/1969 → 01/1972		3,5	12	063296843010	**MSN887**
FARM	2S	D208-3	10/1969 → 01/1972		2,4	12	063523620760	**MSN2051**
FARM	3S	D208-4	01/1968 → 05/1972		3,5	12	063296843010	**MSN887**
FARM	3S	D208-4	01/1968 → 01/1968		2,4	12	063523620760	**MSN2051**
FARM	4S	D208-4	01/1968 → 05/1972		3,5	12	063296843010	**MSN887**
FARM	4S	D208-4	01/1968 → 05/1972		2,4	12	063523620760	**MSN2051**
FARM	F231 - GT	D308-3	09/1965 → 12/1978		3,5	12	063296843010	**MSN887**
FARM	F231 - GT	D308-3	09/1965 → 12/1978		2,4	12	063523620760	**MSN2051**
FARM	FIX - 2E	D325-2	01/1968 → 05/1974		3,5	12	063296843010	**MSN887**
FARM	FIX - 2E	D325-2	01/1968 → 05/1974		2,4	12	063523620760	**MSN2051**
FERRARI								
CRANES	700-SERIE - 792	LOMB.-6LD400	03/1992 →		1,1	12	063521070240	**MSN2010**
CRANES	700-SERIE - 794	LOMB.-6LD400	03/1992 →		1,1	12	063521070240	**MSN2010**
CRANES	718	Lomb.-LDA 510	06/1980 → 12/1983		1,1	12	063521070240	**MSN2010**
MOTOCOLTIVA-TORE	300-SERIE - 305	LOMB.-6LD400	03/1992 →		1,1	12	063521070240	**MSN2010**
MOTOCOLTIVA-TORE	300-SERIE - 305	LOMB.-6LD360	03/1992 →		1,1	12	063521070240	**MSN2010**
MOTOCOLTIVA-TORE	300-SERIE - 306/307	LOMB.-6LD400	03/1992 →		1,1	12	063521070240	**MSN2010**
MOTOCOLTIVA-TORE	70-SERIE - 72S	3LD510	03/1992 →		1,1	12	063521070240	**MSN2010**
MOTOCOLTIVA-TORE	71	Ruggerini-RD 81	06/1980 → 12/1983		1,1	12	063521070240	**MSN2010**

					kW	V	LONG	SHORT
FERRARI								
MOTOCOLTIVA-TORE	72 S	Ruggerini RF120 - RF130	01/1981 → 12/1987		1,1	12	063521070240	**MSN2010**
MOTOCOLTIVA-TORE	T 72	Lomb.-LDA 510	06/1980 → 12/1981		1,1	12	063521070240	**MSN2010**
MOTOCOLTIVA-TORE	T 93	Ruggerini-RD 200	01/1988 →		1,1	12	063521070240	**MSN2010**
FIAT								
100.90	Tutte		06/1984 → 08/1988		3,5	12	063216896010	**MSN224**
100.90	Tutte		06/1984 → 08/1988		3,0	12	063522300090	**MSN2040**
1000 - DT/DTS/S	Tutte	8065.02.200	04/1975 → 12/1979		3,5	12	063216831010	**MSN219**
110.90	Tutte		11/1986 → 08/1988		3,5	12	063216896010	**MSN224**
110.90	Tutte		11/1986 → 08/1988		3,0	12	063522300090	**MSN2040**
115.90	Tutte		01/1984 → 08/1988		3,5	12	063216896010	**MSN224**
115.90	Tutte		01/1984 → 08/1988		3,0	12	063522300090	**MSN2040**
1180	Tutte		01/1980 → 12/1983		3,5	12	063216896010	**MSN224**
1180	Tutte		01/1980 → 12/1983		3,0	12	063522300090	**MSN2040**
1280	Tutte		04/1981 → 12/1983		3,5	12	063216896010	**MSN224**
1280	Tutte		04/1981 → 12/1983		3,0	12	063522300090	**MSN2040**
130 - NC-14	Tutte	OM-CP3/42.300	09/1972 → 12/1979		4,0	24	063216733010	**MSN214**
130 - NR	Tutte	OM-CP3/42.300	09/1972 → 07/1984		4,0	24	063216733010	**MSN214**
130 - NT	Tutte	OM-CP3/42.300	09/1972 → 07/1987		4,0	24	063216733010	**MSN214**
130.90	Tutte		01/1984 → 08/1988		3,5	12	063216896010	**MSN224**
130.90	Tutte		01/1984 → 08/1988		3,0	12	063522300090	**MSN2040**
1380	Tutte	8065.24.000	09/1980 → 12/1983		3,5	12	063216831010	**MSN219**
140.90	Tutte		01/1984 → 08/1988		3,5	12	063216896010	**MSN224**
140.90	Tutte		01/1984 → 08/1988		3,0	12	063522300090	**MSN2040**
1580	Tutte		01/1980 → 12/1983		3,5	12	063216896010	**MSN224**
1580	Tutte		01/1980 → 12/1983		3,0	12	063522300090	**MSN2040**
1580 TURBO	Tutte		01/1983 → 12/1983		3,5	12	063216896010	**MSN224**
1580 TURBO	Tutte		01/1983 → 12/1983		3,0	12	063522300090	**MSN2040**
160.90	Tutte		05/1988 → 08/1988		3,5	12	063216896010	**MSN224**
160.90	Tutte		01/1984 → 04/1988		3,5	12	063216896010	**MSN224**
160.90	Tutte		01/1984 → 04/1988		3,0	12	063522300090	**MSN2040**
160.90	Tutte		05/1988 → 08/1988		3,0	12	063522300090	**MSN2040**
180.90	Tutte		05/1988 → 08/1988		3,5	12	063216896010	**MSN224**
180.90	Tutte		05/1988 → 08/1988		3,0	12	063522300090	**MSN2040**
1880	Tutte		01/1980 → 12/1983		3,5	12	063216896010	**MSN224**
1880	Tutte		01/1980 → 12/1983		3,0	12	063522300090	**MSN2040**
25 - H2	Tutte	8035.05.377	11/1985 → 04/1989		2,5	12	063217126010	**MSN227**
25 - H2	Tutte	8035.05.377	11/1985 → 04/1989		2,6	12	063522235040	**MSN2036**
25 - H2	Tutte	8035.05.377	11/1985 → 04/1989		3,0	12	063523620390	**MSN2050**
25 - H4	Tutte	8035.05.377	11/1985 → 04/1989		2,5	12	063217126010	**MSN227**
25 - H4	Tutte	8035.05.377	11/1985 → 04/1989		2,6	12	063522235040	**MSN2036**
25 - H4	Tutte	8035.05.377	11/1985 → 04/1989		3,0	12	063523620390	**MSN2050**
25 - M2	Tutte	8035.05.377	11/1985 → 12/1988		2,5	12	063217126010	**MSN227**

					kW	V	LONG	SHORT
FIAT								
25 - M2	Tutte	8035.05.377	11/1985 → 12/1988		2,6	12	063522235040	**MSN2036**
25 - M2	Tutte	8035.05.377	11/1985 → 12/1988		3,0	12	063523620390	**MSN2050**
25 - M4	Tutte	8035.05.377	11/1985 → 12/1988		2,5	12	063217126010	**MSN227**
25 - M4	Tutte	8035.05.377	11/1985 → 12/1988		2,6	12	063522235040	**MSN2036**
25 - M4	Tutte	8035.05.377	11/1985 → 12/1988		3,0	12	063523620390	**MSN2050**
30 - H2/H4	Tutte	8035.05.377	11/1985 → 04/1989		2,5	12	063217126010	**MSN227**
30 - H2/H4	Tutte	8035.05.377	11/1985 → 04/1989		2,6	12	063522235040	**MSN2036**
30 - H2/H4	Tutte	8035.05.377	11/1985 → 04/1989		3,0	12	063523620390	**MSN2050**
30 - M2/M4	Tutte	8035.05.377	11/1985 → 12/1988		2,5	12	063217126010	**MSN227**
30 - M2/M4	Tutte	8035.05.377	11/1985 → 12/1988		2,6	12	063522235040	**MSN2036**
30 - M2/M4	Tutte	8035.05.377	11/1985 → 12/1988		3,0	12	063523620390	**MSN2050**
402	Tutte		→		2,5	12	063217121010	**MSN226**
404 - DT	Tutte		→		2,5	12	063217121010	**MSN226**
420 - DT	Tutte		→		2,5	12	063217121010	**MSN226**
440 - DT/V	Tutte		→		2,5	12	063217121010	**MSN226**
450 - DT/DT-DAL	Tutte		→		2,5	12	063217121010	**MSN226**
455 - C-DAL/C Super	Tutte		→		2,5	12	063217121010	**MSN226**
465 - C	Tutte	8035.02.276	06/1982 → 12/1984		2,5	12	063217126010	**MSN227**
465 - C	Tutte	8035.02.276	06/1982 → 12/1984		3,0	12	063523620390	**MSN2050**
466 - DT	Tutte	8035.02.276	12/1982 → 12/1984		2,5	12	063217126010	**MSN227**
466 - DT	Tutte	8035.02.276	12/1982 → 12/1984		3,0	12	063523620390	**MSN2050**
470 - DT/DTS	Tutte		→		2,5	12	063217121010	**MSN226**
474	Tutte	8035.02.212	04/1983 → 12/1984		2,5	12	063217126010	**MSN227**
474	Tutte	8035.02.212	04/1983 → 12/1984		3,0	12	063523620390	**MSN2050**
480 - 8DT	Tutte		→		2,5	12	063217121010	**MSN226**
480 - DT/S	Tutte	8035.02.302	01/1976 → 03/1982		2,5	12	063217126010	**MSN227**
480 - DT/S	Tutte	8035.02.302	01/1976 → 03/1982		3,0	12	063523620390	**MSN2050**
480 - S/V	Tutte		→		2,5	12	063217121010	**MSN226**
500 - DT	Tutte	8035.02.201	06/1973 → 03/1982		2,5	12	063217126010	**MSN227**
500 - DT	Tutte	8035.02.201	06/1973 → 03/1982		3,0	12	063523620390	**MSN2050**
500 - DT/S	Tutte	8035.02.202	06/1978 → 03/1982		2,5	12	063217126010	**MSN227**
500 - DT/S	Tutte	8035.02.202	06/1978 → 03/1982		3,0	12	063523620390	**MSN2050**
500 - S	Tutte		→		2,5	12	063217121010	**MSN226**
505 - C	Tutte	8035.02.372	01/1973 → 12/1980		2,5	12	063217126010	**MSN227**
505 - C	Tutte	8035.02.372	01/1973 → 12/1980		3,0	12	063523620390	**MSN2050**
505 - S	Tutte	8035.04.272	12/1980 → 07/1982		2,5	12	063217126010	**MSN227**
505 - S	Tutte	8035.04.272	12/1980 → 07/1982		3,0	12	063523620390	**MSN2050**
540 - DT/S	Tutte	8035.02.302	03/1972 → 03/1982		2,5	12	063217126010	**MSN227**
540 - DT/S	Tutte	8035.02.302	03/1972 → 03/1982		3,0	12	063523620390	**MSN2050**
55 - 46	Tutte	8035.06.206,306	01/1985 → 12/1988		2,5	12	063217126010	**MSN227**
55 - 46	Tutte	8035.06.206,306	01/1985 → 12/1988		3,0	12	063523620390	**MSN2050**
55 - 56	Tutte	8035.06.206,306	01/1989 →		2,5	12	063217126010	**MSN227**
55 - 56	Tutte	8035.06.206,306	01/1989 →		3,0	12	063523620390	**MSN2050**
55 - 65	Tutte	8035.06.206,306	10/1984 → 02/1989		2,5	12	063217126010	**MSN227**

					kW	V	LONG	SHORT
FIAT								
55 - 65	Tutte	8035.06.206,306	10/1984 → 02/1989		3,0	12	063523620390	**MSN2050**
55 - 66	Tutte	8035.06.307	01/1990 →		2,5	12	063217126010	**MSN227**
55 - 66	Tutte	8035.06.307	01/1990 →		3,0	12	063523620390	**MSN2050**
55 - 66DT	Tutte	8035.06.206	09/1984 →		2,5	12	063217126010	**MSN227**
55 - 66DT	Tutte	8035.06.206	09/1984 →		3,0	12	063523620390	**MSN2050**
55 - 66LP	Tutte	8035.06.208	04/1985 → 06/1988		2,5	12	063217126010	**MSN227**
55 - 66LP	Tutte	8035.06.208	04/1985 → 06/1988		3,0	12	063523620390	**MSN2050**
55 - 66LP/DT	Tutte	8035.06.308	04/1985 → 06/1988		2,5	12	063217126010	**MSN227**
55 - 66LP/DT	Tutte	8035.06.308	04/1985 → 06/1988		3,0	12	063523620390	**MSN2050**
55 - 75	Tutte	8035.06.206,306	03/1989 →		2,5	12	063217126010	**MSN227**
55 - 75	Tutte	8035.06.206,306	03/1989 →		3,0	12	063523620390	**MSN2050**
55 - 88	Tutte	8035.06.216,317	01/1990 →		2,5	12	063217126010	**MSN227**
55 - 88	Tutte	8035.06.216,317	01/1990 →		3,0	12	063523620390	**MSN2050**
55 - 90	Tutte	8035.06.200	03/1984 → 06/1989		2,5	12	063217126010	**MSN227**
55 - 90	Tutte	8035.06.200	03/1984 → 06/1989		3,0	12	063523620390	**MSN2050**
55 - F10	Tutte	OM8340.04.200	04/1978 → 10/1980		2,5	12	063217126010	**MSN227**
55 - F10	Tutte	OM8340.04.200	04/1978 → 10/1980		3,0	12	063523620390	**MSN2050**
55.90	Tutte	8035.06.200/206/208/222/306	03/1984 → 08/1988		2,6	12	063522235040	**MSN2036**
565 - C	Tutte	8035.04.376	06/1982 → 12/1984		2,5	12	063217126010	**MSN227**
565 - C	Tutte	8035.04.376	06/1982 → 12/1984		3,0	12	063523620390	**MSN2050**
566	Tutte	8035.04.376	02/1982 → 12/1984		2,5	12	063217126010	**MSN227**
566	Tutte	8035.04.376	02/1982 → 12/1984		3,0	12	063523620390	**MSN2050**
570 - DT	Tutte	8035.04.270	12/1977 → 02/1982		2,5	12	063217126010	**MSN227**
570 - DT	Tutte	8035.04.270	12/1977 → 02/1982		3,0	12	063523620390	**MSN2050**
570 - F/V	Tutte	8035.04.378	09/1980 → 12/1984		2,5	12	063217126010	**MSN227**
570 - F/V	Tutte	8035.04.378	09/1980 → 12/1984		3,0	12	063523620390	**MSN2050**
580 - DT	Tutte	8035.04.270	12/1977 → 02/1984		3,5	12	063216831010	**MSN219**
580 - DT	Tutte	8035.04.270	12/1977 → 02/1984		2,5	12	063217126010	**MSN227**
580 - DT	Tutte	8035.04.270	12/1977 → 02/1984		3,0	12	063523620390	**MSN2050**
60 - 46	Tutte	8035.05.206,306	09/1987 → 12/1988		2,5	12	063217126010	**MSN227**
60 - 46	Tutte	8035.05.206,306	09/1987 → 12/1988		3,0	12	063523620390	**MSN2050**
60 - 56	Tutte	8035.05.206	01/1989 →		2,5	12	063217126010	**MSN227**
60 - 56	Tutte	8035.05.307	01/1990 →		2,5	12	063217126010	**MSN227**
60 - 56	Tutte	8035.05.206	01/1989 →		3,0	12	063523620390	**MSN2050**
60 - 56	Tutte	8035.05.307	01/1990 →		3,0	12	063523620390	**MSN2050**
60 - 65	Tutte	8035.05.206,306	10/1984 → 01/1989		2,5	12	063217126010	**MSN227**
60 - 65	Tutte	8035.05.206,306	10/1984 → 01/1989		3,0	12	063523620390	**MSN2050**
60 - 66	Tutte	8035.05.306	09/1984 → 12/1989		2,5	12	063217126010	**MSN227**
60 - 66	Tutte	8035.05.307	01/1990 →		2,5	12	063217126010	**MSN227**
60 - 66	Tutte	8035.05.307	01/1990 →		3,0	12	063523620390	**MSN2050**
60 - 66	Tutte	8035.05.306	09/1984 → 12/1989		3,0	12	063523620390	**MSN2050**
60 - 66DT	Tutte	8035.05.206	09/1984 →		2,5	12	063217126010	**MSN227**
60 - 66DT	Tutte	8035.05.206	09/1984 →		3,0	12	063523620390	**MSN2050**
60 - 66LP/DT	Tutte	8035.05.308	04/1985 → 06/1988		2,5	12	063217126010	**MSN227**
60 - 66LP/DT	Tutte	8035.05.308	04/1985 → 06/1988		3,0	12	063523620390	**MSN2050**

					kW	V	LONG	SHORT
FIAT								
60 - 75	Tutte	8035.05.206,306	03/1989 →		2,5	12	063217126010	**MSN227**
60 - 75	Tutte	8035.05.206,306	03/1989 →		3,0	12	063523620390	**MSN2050**
60 - 88	Tutte	8035.05.216,317	11/1989 →		2,5	12	063217126010	**MSN227**
60 - 88	Tutte	8035.05.216,317	11/1989 →		3,0	12	063523620390	**MSN2050**
60 - 90DT	Tutte	8035.05.200	03/1984 → 06/1989		2,5	12	063217126010	**MSN227**
60 - 90DT	Tutte	8035.05.200	03/1984 → 06/1989		3,0	12	063523620390	**MSN2050**
605 - C/CS	Tutte	8045.02.211	01/1977 → 07/1982		3,5	12	063216831010	**MSN219**
640 - DT	Tutte	8045.02.200	10/1972 → 03/1982		3,5	12	063216831010	**MSN219**
65 - 46	Tutte	8045.06.220,320	04/1985 → 12/1988		3,5	12	063216831010	**MSN219**
65 - 56	Tutte	8045.06.220,321	01/1990 →		3,5	12	063216831010	**MSN219**
65 - 66	Tutte	8045.06.220,321	06/1987 →		3,5	12	063216831010	**MSN219**
65 - 88	Tutte	8045.06.219,319	11/1989 →		3,5	12	063216831010	**MSN219**
65 - 90	Tutte	8045.06.225	09/1987 →		3,5	12	063216831010	**MSN219**
65 - NC	Tutte	OM-CO3/41	09/1972 → 12/1979		4,0	24	063216733010	**MSN214**
66 DT Frutteto - 55	Tutte	8035.06.323	04/1985 →		2,5	12	063217126010	**MSN227**
66 DT Frutteto - 55	Tutte	8035.06.323	04/1985 →		3,0	12	063523620390	**MSN2050**
66 DT Frutteto - 60	Tutte	8035.05.208	04/1985 06/1988		2,5	12	063217126010	**MSN227**
66 DT Frutteto - 60	Tutte	8035.05.208	04/1985 → 06/1988		3,0	12	063523620390	**MSN2050**
66 Frutteto - 60	Tutte	8035.05.208	04/1985 → 06/1988		2,5	12	063217126010	**MSN227**
66 Frutteto - 60	Tutte	8035.05.208	04/1985 → 06/1988		3,0	12	063523620390	**MSN2050**
66 Vigneto - 55	Tutte	8035.06.222	04/1985 →		2,5	12	063217126010	**MSN227**
66 Vigneto - 55	Tutte	8035.06.222	04/1985 →		3,0	12	063523620390	**MSN2050**
66 Vigneto - 70	Tutte	8045.06.208,309	01/1990 →		3,5	12	063216831010	**MSN219**
665 - C	Tutte	8045.02.276	06/1982 → 12/1984		3,5	12	063216831010	**MSN219**
666	Tutte	8045.02.276	02/1982 → 12/1984		3,5	12	063216831010	**MSN219**
666 - DT	Tutte	8045.02.376	02/1982 → 12/1984		3,5	12	063216831010	**MSN219**
66DT Vigneto - 55	Tutte	8035.06.222	05/1987 →		2,5	12	063217126010	**MSN227**
66DT Vigneto - 55	Tutte	8035.06.222	05/1987 →		3,0	12	063523620390	**MSN2050**
670	Tutte	8045.02.278	09/1980 → 04/1982		3,5	12	063216831010	**MSN219**
670 - DT	Tutte	8045.02.270	07/1977 → 04/1982		3,5	12	063216831010	**MSN219**
680 - DT	Tutte	8045.02.270	07/1977 → 02/1984		3,5	12	063216831010	**MSN219**
70 - 56	Tutte	8045.06.206,307	01/1990 →		3,5	12	063216831010	**MSN219**
70 - 65	Tutte	8045.06.206,306	10/1984 → 02/1989		3,5	12	063216831010	**MSN219**
70 - 66	Tutte	8045.06.206	09/1984 →		3,5	12	063216831010	**MSN219**
70 - 66DT	Tutte	8045.06.307	01/1990 →		3,5	12	063216831010	**MSN219**
70 - 66F/FDT/ LP/DT	Tutte	8045.06.208,309	01/1990 →		3,5	12	063216831010	**MSN219**
70 - 75	Tutte	8045.06.206,307	01/1990 →		3,5	12	063216831010	**MSN219**
70 - 76	Tutte	8045.06.208,309	01/1990 →		3,5	12	063216831010	**MSN219**
70 - 88	Tutte	8045.06.216,317	11/1989 →		3,5	12	063216831010	**MSN219**
70 - 90	Tutte	8045.06.200	03/1984 →		3,5	12	063216831010	**MSN219**
70 - NC	Tutte	OM-CO3/41	09/1972 → 12/1979		4,0	24	063216733010	**MSN214**
75 - NC	Tutte	OM-CO3/41	09/1972 → 12/1979		4,0	24	063216733010	**MSN214**
765 - C	Tutte	8045.04.276	06/1982 → 12/1984		3,5	12	063216831010	**MSN219**
766 - DT	Tutte	8045.04.376	02/1982 → 12/1983		3,5	12	063216831010	**MSN219**

					kW	V	LONG	SHORT
FIAT								
766 - DT	Tutte	8045.04.376	02/1982 → 12/1984		3,5	12	063216831010	**MSN219**
780 - DT	Tutte	8045.04.270	01/1975 → 02/1984		3,5	12	063216831010	**MSN219**
80 - 65	Tutte	8045.06.200	10/1984 → 02/1989		3,5	12	063216831010	**MSN219**
80 - 66-2RM	Tutte	8045.05.208	05/1987 → 12/1989		3,5	12	063216831010	**MSN219**
80 - 66-2RM	Tutte	8045.05.209	01/1990 →		3,5	12	063216831010	**MSN219**
80 - 66-4RM	Tutte	8045.05.308	05/1987 → 12/1989		3,5	12	063216831010	**MSN219**
80 - 66-4RM	Tutte	8045.05.309	01/1990 →		3,5	12	063216831010	**MSN219**
80 - 66DT	Tutte	8045.06.206,306	09/1984 → 12/1989		3,5	12	063216831010	**MSN219**
80 - 66DT	Tutte	8045.05.207,307	01/1990 →		3,5	12	063216831010	**MSN219**
80 - 75	Tutte	8045.05.206	03/1989 → 12/1989		3,5	12	063216831010	**MSN219**
80 - 75	Tutte	8045.05.207	01/1990 →		3,5	12	063216831010	**MSN219**
80 - 88	Tutte	8045.05.216,317	11/1989 →		3,5	12	063216831010	**MSN219**
80 - 90DT	Tutte	8045.05.205	03/1984 →		3,5	12	063216831010	**MSN219**
85 - 55	Tutte	8045.05.200,300	10/1984 → 06/1989		3,5	12	063216831010	**MSN219**
85 - 90	Tutte	8045.25.310	01/1991 →		3,5	12	063216831010	**MSN219**
855 - C	Tutte	8045.04.275	02/1981 → 12/1984		3,5	12	063216831010	**MSN219**
880 - 5	Tutte	8055.04.200	09/1980 → 08/1982		3,5	12	063216831010	**MSN219**
880-5	Tutte		03/1980 → 06/1984		3,5	12	063216896010	**MSN224**
880-5	Tutte		03/1980 → 06/1984		3,0	12	063522300090	**MSN2040**
90.90	Tutte		06/1984 → 08/1988		3,5	12	063216896010	**MSN224**
90.90	Tutte		06/1984 → 08/1988		3,0	12	063522300090	**MSN2040**
95.55	Tutte		10/1984 → 08/1988		3,5	12	063216896010	**MSN224**
95.55	Tutte		10/1984 → 08/1988		3,0	12	063522300090	**MSN2040**
955-C	Tutte		02/1981 → 12/1984		3,5	12	063216896010	**MSN224**
955-C	Tutte		02/1981 → 12/1984		3,0	12	063522300090	**MSN2040**
980 DT	Tutte		01/1980 → 06/1984		3,5	12	063216896010	**MSN224**
980 DT	Tutte		01/1980 → 06/1984		3,0	12	063522300090	**MSN2040**
BI - 20C/25C/30C	Tutte	8035.44.059	01/1980 → 12/1987		2,5	12	063217126010	**MSN227**
BI - 20C/25C/30C	Tutte	8035.44.059	01/1980 → 12/1987		2,6	12	063522235040	**MSN2036**
BI - 20C/25C/30C	Tutte	8035.44.059	01/1980 → 12/1987		3,0	12	063523620390	**MSN2050**
BIM - 20/25	Tutte	8035.42.055	01/1972 → 12/1982		2,5	12	063217126010	**MSN227**
BIM - 20/25	Tutte	8035.42.055	01/1972 → 12/1982		2,6	12	063522235040	**MSN2036**
BIM - 20/25	Tutte	8035.42.055	01/1972 → 12/1982		3,0	12	063523620390	**MSN2050**
DIM - 20/25	Tutte	8035.02.355	01/1971 → 12/1982		2,5	12	063217126010	**MSN227**
DIM - 20/25	Tutte	8035.02.355	01/1971 → 12/1982		2,6	12	063522235040	**MSN2036**
DIM - 20/25	Tutte	8035.02.355	01/1971 → 12/1982		3,0	12	063523620390	**MSN2050**
DIM - 30	Tutte	8045.02.358	01/1973 → 11/1981		3,5	12	063216831010	**MSN219**
DIM - 35	Tutte	8045.02.358	01/1973 → 11/1981		3,5	12	063216831010	**MSN219**
DM - 12/15	Tutte	8035.02.350	01/1971 → 12/1982		2,5	12	063217126010	**MSN227**
DM - 12/15	Tutte	8035.02.350	01/1971 → 12/1982		2,6	12	063522235040	**MSN2036**
DM - 12/15	Tutte	8035.02.350	01/1971 → 12/1982		3,0	12	063523620390	**MSN2050**
R - 450/DT	Tutte	8035.01	06/1972 → 09/1980		2,5	12	063217126010	**MSN227**
R - 450/DT	Tutte	8035.01	06/1972 → 09/1980		3,0	12	063523620390	**MSN2050**
R - H2/H4	Tutte	8035.05.377	11/1985 → 04/1989		2,5	12	063217126010	**MSN227**
R - H2/H4	Tutte	8035.05.377	11/1985 → 04/1989		3,0	12	063523620390	**MSN2050**

					kW	V	LONG	SHORT
FIAT								
R - M2/M4	Tutte	8035.05.377	11/1985 → 12/1988		2,5	12	063217126010	**MSN227**
R - M2/M4	Tutte	8035.05.377	11/1985 → 12/1988		3,0	12	063523620390	**MSN2050**
SERIE 400	465C	8035.02.276	06/1982 → 12/1984		2,6	12	063522235040	**MSN2036**
SERIE 400	466DT	8035.02.276	02/1982 → 12/1984		2,6	12	063522235040	**MSN2036**
SERIE 400	474	8035.02.212	04/1983 → 12/1984		2,6	12	063522235040	**MSN2036**
SERIE 400	480S/DT	8035.02.302	06/1978 → 03/1982		2,6	12	063522235040	**MSN2036**
SERIE 50 Frutteto	55.46/65/66 2RM DT - SERIE 50	8035.06.200/206/208/222/306	03/1984 → 08/1988		2,6	12	063522235040	**MSN2036**
SERIE 50 Vigneto	55.46/65/66 DT - SERIE 50	8035.06.200/206/208/222/306	03/1984 → 08/1988		2,6	12	063522235040	**MSN2036**
SERIE 50 Vigneto	55.46/65/66 LP-DT	8035.06.200/206/208/222/306	03/1984 → 08/1988		2,6	12	063522235040	**MSN2036**
SERIE 500	- 580DT	8035.04.270	12/1977 → 02/1984		2,6	12	063522235040	**MSN2036**
SERIE 500	500DT	8035.02.201	03/1976 → 03/1982		2,6	12	063522235040	**MSN2036**
SERIE 500	500S/DT	8035.02.202	06/1978 → 03/1982		2,6	12	063522235040	**MSN2036**
SERIE 500	505S	8035.04.272	12/1980 → 07/1982		2,6	12	063522235040	**MSN2036**
SERIE 500	540S/DT	8035025302	06/1978 → 03/1982		2,6	12	063522235040	**MSN2036**
SERIE 500	565C	8035.04.376	06/1982 → 12/1984		2,6	12	063522235040	**MSN2036**
SERIE 500	566DT	8035.04.376	02/1982 → 12/1984		2,6	12	063522235040	**MSN2036**
SERIE 500	570DT/F/V	8035.04.270/378	12/1977 → 12/1984		2,6	12	063522235040	**MSN2036**
SERIE 60	60.90/DT	8035.05.200/206/208/306/308	03/1984 → 08/1988		2,6	12	063522235040	**MSN2036**
SERIE 60 Vigneto	55.46/65/66 DT	8035.06.200/206/208/222/306	03/1984 → 08/1988		2,6	12	063522235040	**MSN2036**
FIAT GEOTECH								
SERIE 35-70	45.66 2RM DT	8035.06.220/320	01/1985 → 01/2005		2,6	12	063522235040	**MSN2036**
SERIE 35-70	45.66 2RM DT	8035.06.321	01/1985 → 01/2005		2,6	12	063522235040	**MSN2036**
SERIE 35-70	55.46/56/65/66 DT	8035.06.200/206/306/307	09/1984 → 01/2004		2,6	12	063522235040	**MSN2036**
SERIE 35-70	55.66/DT	8035.06.216/222/223/307	04/1985 →		2,6	12	063522235040	**MSN2036**
SERIE 35-70	55.75/90	8035.06.200/206/306/307	09/1984 → 01/2004		2,6	12	063522235040	**MSN2036**
SERIE 35-70	55.86 F/V	8035.06.216/222/223/307	04/1985 →		2,6	12	063522235040	**MSN2036**
SERIE 35-70	60.46/56/65/66/75	8035.05.200/206/208/306/307	09/1984 →		2,6	12	063522235040	**MSN2036**
SERIE 35-70	60.75-85F/V-86F/V-90DT	8035.05.200/206/208/306/307	09/1984 →		2,6	12	063522235040	**MSN2036**
SERIE 35-70	60.88	8035.05.216/317	01/1989 → 12/2004		2,6	12	063522235040	**MSN2036**
SERIE 35-70 Frutteto	55.46/65/66 2RM DT	8035.06.216/222/223/307	04/1985 →		2,6	12	063522235040	**MSN2036**
SERIE 35-70 Vigneto	45.66 DT	8035.06.321	01/1985 → 01/2005		2,6	12	063522235040	**MSN2036**

					kW	V	LONG	SHORT
FIAT GEOTECH								
SERIE 35-70 Vigneto	45.66 DT	8035.06.220/320	01/1985 → 01/2005		2,6	12	063522235040	**MSN2036**
SERIE 35-70 Vigneto	55.46/65/66 DT	8035.06.216/222/223/307	04/1985 →		2,6	12	063522235040	**MSN2036**
FIAT OM CARRELLI ELEV								
DI - 12/15	Tutte	8035.02.353	01/1971 → 12/1982		2,5	12	063217126010	**MSN227**
DI - 12/15	Tutte	8035.02.353	01/1971 → 12/1982		2,6	12	063522235040	**MSN2036**
DI - 12/15	Tutte	8035.02.353	01/1971 → 12/1982		3,0	12	063523620390	**MSN2050**
DI - 130	Tutte		07/1981 → 12/1989		3,0	12	063522300090	**MSN2040**
DI - 20C	Tutte	8035.05.359	12/1990 →		3,5	12	063216831010	**MSN219**
DI - 25C	Tutte	8035.05.359	02/1986 → 12/1990		3,5	12	063216831010	**MSN219**
DI - 25C	Tutte	8035.05.359	12/1990 →		3,5	12	063216831010	**MSN219**
DI - 25C	Tutte	8035.04.359	01/1980 → 02/1986		3,5	12	063216831010	**MSN219**
DI - 30	Tutte	8045.02.359	01/1973 → 11/1981		3,5	12	063216831010	**MSN219**
DI - 30C	Tutte	8035.04.359	01/1980 → 02/1986		3,5	12	063216831010	**MSN219**
DI - 30C	Tutte	8035.05.359	02/1986 → 12/1990		3,5	12	063216831010	**MSN219**
DI - 30C	Tutte	8045.04.359	07/1981 → 05/1985		3,5	12	063216831010	**MSN219**
DI - 30C	Tutte	8035.05.359	12/1990 →		3,5	12	063216831010	**MSN219**
DI - 30CH	Tutte	8045.05.359	06/1985 → 12/1990		3,5	12	063216831010	**MSN219**
DI - 30CH	Tutte	8045.05.359	12/1990 →		3,5	12	063216831010	**MSN219**
DI - 35	Tutte	8045.02.359	01/1973 → 11/1981		3,5	12	063216831010	**MSN219**
DI - 35C	Tutte	8045.05.359	06/1985 → 12/1990		3,5	12	063216831010	**MSN219**
DI - 35C	Tutte	8045.04.359	07/1981 → 05/1985		3,5	12	063216831010	**MSN219**
DI - 35C	Tutte	8045.05.359	12/1990 →		3,5	12	063216831010	**MSN219**
DI - 40	Tutte	8045.02.359	01/1973 → 11/1981		3,5	12	063216831010	**MSN219**
DI - 40C	Tutte	8045.05.359	12/1990 →		3,5	12	063216831010	**MSN219**
DI - 40C	Tutte	8045.05.359	06/1985 → 12/1990		3,5	12	063216831010	**MSN219**
DI - 40C	Tutte	8045.04.359	07/1981 → 05/1985		3,5	12	063216831010	**MSN219**
DI - 45C	Tutte	8045.05.359	12/1990 →		3,5	12	063216831010	**MSN219**
DI - 45C	Tutte	8045.05.359	06/1985 → 12/1990		3,5	12	063216831010	**MSN219**
DI - 50	Tutte	8045.02.356	01/1973 → 07/1981		3,5	12	063216831010	**MSN219**
DI - 50CH	Tutte	8045.05.359	06/1985 → 12/1990		3,5	12	063216831010	**MSN219**
DI - 50CH	Tutte	8045.05.359	12/1990 →		3,5	12	063216831010	**MSN219**
DI - 60C	Tutte	8045.05.359	12/1990 →		3,5	12	063216831010	**MSN219**
DI - 60C	Tutte	8045.05.359	06/1985 → 12/1990		3,5	12	063216831010	**MSN219**
DI - 70	Tutte	8055.04.250	01/1981 → 12/1981		3,5	12	063216831010	**MSN219**
DI - 70C	Tutte	8055.05.250	12/1990 →		3,5	12	063216831010	**MSN219**
DI - 70C	Tutte	8055.05.250	10/1985 → 12/1990		3,5	12	063216831010	**MSN219**
DI - 80C	Tutte	8055.05.250	12/1990 →		3,5	12	063216831010	**MSN219**
DI - 80C	Tutte	8055.05.250	10/1985 → 12/1990		3,5	12	063216831010	**MSN219**
FIATAGRI								
1300-DT-S-DTS	Tutte		11/1986 →		3,5	12	063216833010	**MSN220**
880 DT	Tutte		→		3,5	12	063216833010	**MSN220**

					kW	V	LONG	SHORT
FIATALLIS								
MOVIMENTO TERRA	4	8035.02.210	11/1970 → 07/1978		2,5	12	063217126010	**MSN227**
MOVIMENTO TERRA	4	8035.02.210	11/1970 → 07/1978		3,0	12	063523620390	**MSN2050**
MOVIMENTO TERRA	545 - B	8061.I000Alles.009	09/1981 → 12/1982		3,5	12	063216831010	**MSN219**
MOVIMENTO TERRA	FG - 65A	8041.04.300	03/1984 → 01/1988		3,5	12	063216831010	**MSN219**
MOVIMENTO TERRA	FL - 4C	8035.02.361	11/1970 → 07/1978		3,5	12	063216831010	**MSN219**
MOVIMENTO TERRA	FL - 4C	8035.02.261	11/1970 → 07/1978		3,5	12	063216831010	**MSN219**
MOVIMENTO TERRA	FL - 4C	8035.02.261,361	11/1970 → 07/1978		2,5	12	063217126010	**MSN227**
MOVIMENTO TERRA	FL - 4C	8035.02.261,361	11/1970 → 07/1978		3,0	12	063523620390	**MSN2050**
MOVIMENTO TERRA	FL - 4D	8035.02.365	11/1970 → 07/1978		3,5	12	063216831010	**MSN219**
MOVIMENTO TERRA	FL 4C-FL 4D		→		3,5	12	063216833010	**MSN220**
MOVIMENTO TERRA	FL 6		→		3,5	12	063216833010	**MSN220**
MOVIMENTO TERRA	FL 9		→		3,5	12	063216833010	**MSN220**
MOVIMENTO TERRA	S - 105B	CP3IVar2	01/1970 → 11/1976		4,0	24	063216733010	**MSN214**
MOVIMENTO TERRA	S - 105B	CP3Var1	01/1970 → 11/1976		4,0	24	063216733010	**MSN214**
MOVIMENTO TERRA	S - 11	CP3Var3	05/1976 → 01/1982		4,0	24	063216733010	**MSN214**
MOVIMENTO TERRA	S - 60	CN3I	01/1970 → 11/1979		4,0	24	063216733010	**MSN214**
MOVIMENTO TERRA	S - 70	CO3IVar1	01/1971 → 12/1977		4,0	24	063216733010	**MSN214**
MOVIMENTO TERRA	S - 9	CO3/130IVar2	04/1976 → 01/1982		4,0	24	063216733010	**MSN214**
MOVIMENTO TERRA	S - 90	CO3/130IVar1	01/1971 → 12/1977		4,0	24	063216733010	**MSN214**
MOVIMENTO TERRA	S - 90	CP3IVar1	01/1971 → 12/1977		4,0	24	063216733010	**MSN214**
MOVIMENTO TERRA	SL - 11	CP3Var3	05/1976 → 01/1982		4,0	24	063216733010	**MSN214**
MOVIMENTO TERRA	SL - 9	CO3/130IVar2	04/1976 → 01/1982		4,0	24	063216733010	**MSN214**
MOVIMENTO TERRA	SR - 9	CO3/130Var2	03/1978 → 05/1982		4,0	24	063216733010	**MSN214**

					kW	V	LONG	SHORT
FORD								
1310 Compact 3-58 Shibaura	Tutte		01/1983 → 01/1986		1,2	12	063521070780	**MSN2016**
1510 Compact 3-58 Shibaura	Tutte		01/1983 → 01/1986		1,2	12	063521070780	**MSN2016**
Skid Steer Loader	CL25 Shi-baura diesel		01/1983 → 01/1986		1,2	12	063521070780	**MSN2016**
FORD MARINE								
2627T	Tutte		→		2,8	12	063227569010	**MSN202**
FORD NEW HOLLAND								
2000-3	Tutte	158,175,201,256,401C.I.	01/1965 →		2,8	12	063227569010	**MSN202**
2310	Tutte		→		2,8	12	063227569010	**MSN202**
2514 - E	Tutte	256C.I.	→		2,8	12	063227569010	**MSN202**
2610	Tutte		→		2,8	12	063227569010	**MSN202**
2810	Tutte		→		2,8	12	063227569010	**MSN202**
2910-391	Tutte		01/1982 →		2,8	12	063227569010	**MSN202**
3230	Tutte		→		2,8	12	063227569010	**MSN202**
3310	Tutte		01/1982 →		2,8	12	063227569010	**MSN202**
3310X4	Tutte		01/1982 →		2,8	12	063227569010	**MSN202**
3430	Tutte		→		2,8	12	063227569010	**MSN202**
3610	Tutte		→		2,8	12	063227569010	**MSN202**
3900	Tutte		→		2,8	12	063227569010	**MSN202**
3910H	Tutte		→		2,8	12	063227569010	**MSN202**
3930H	Tutte		→		2,8	12	063227569010	**MSN202**
4000-5	Tutte	158,175,201,256,401C.I	01/1965 →		2,8	12	063227569010	**MSN202**
4100-46	Tutte	201,256,401C.I	01/1979 →		2,8	12	063227569010	**MSN202**
4110	Tutte		→		2,8	12	063227569010	**MSN202**
4130H	Tutte		→		2,8	12	063227569010	**MSN202**
4610	Tutte		01/1982 →		2,8	12	063227569010	**MSN202**
4630	Tutte		→		2,8	12	063227569010	**MSN202**
550	Tutte		→		2,8	12	063227569010	**MSN202**
5530HC	Tutte	4-220 Ford Diesel	01/1992 → 01/1996		3,0	12	063522300070	**MSN2039**
5600-66	Tutte	201,256,401C.I.	01/1979 →		2,8	12	063227569010	**MSN202**
5610	Tutte		01/1979 →		2,8	12	063227569010	**MSN202**
5635	Tutte	4-238 Ford Diesel	01/1996 → 01/1999		3,0	12	063522300070	**MSN2039**
5700	Tutte		→		2,8	12	063227569010	**MSN202**
5900	Tutte		→		2,8	12	063227569010	**MSN202**
6410	Tutte		→		2,8	12	063227569010	**MSN202**
6530HC	Tutte	4-268 Ford Diesel	01/1992 → 01/1997		3,0	12	063522300070	**MSN2039**
655-A/E	Tutte	4-304 D	01/1996 → 01/1997		2,8	12	063227569010	**MSN202**
6610	Tutte		01/1979 →		2,8	12	063227569010	**MSN202**
6635	Tutte	4-238 Ford Diesel	01/1996 → 01/1999		3,0	12	063522300070	**MSN2039**
6710	Tutte		01/1979 →		2,8	12	063227569010	**MSN202**
6810	Tutte		→		2,8	12	063227569010	**MSN202**
7000-8	Tutte	158,175,201,256,401C.I.	01/1965 →		2,8	12	063227569010	**MSN202**
7410	Tutte		→		2,8	12	063227569010	**MSN202**

					kW	V	LONG	SHORT
FORD NEW HOLLAND								
7530	Tutte	6-331 Ford Diesel	01/1992 → 01/1996		3,0	12	063522300070	**MSN2039**
7600-86	Tutte	201,256,401C.I.	01/1979 →		2,8	12	063227569010	**MSN202**
7610-771	Tutte		01/1982 →		2,8	12	063227569010	**MSN202**
7635	Tutte	4-238 Ford Diesel	01/1996 → 01/1999		3,0	12	063522300070	**MSN2039**
7700-87	Tutte	201,256,401C.I.	01/1979 →		2,8	12	063227569010	**MSN202**
7810	Tutte		→		2,8	12	063227569010	**MSN202**
7910	Tutte		01/1982 →		2,8	12	063227569010	**MSN202**
8200	Tutte		→		2,8	12	063227569010	**MSN202**
8210	Tutte		→		2,8	12	063227569010	**MSN202**
8401	Tutte		→		2,8	12	063227569010	**MSN202**
8430 DT	Tutte		12/1993 →		3,5	12	063216896010	**MSN224**
8430 DT	Tutte		12/1993 →		3,0	12	063522300090	**MSN2040**
8530	Tutte		→		2,8	12	063227569010	**MSN202**
8630	Tutte		→		2,8	12	063227569010	**MSN202**
8630 DT	Tutte		12/1993 →		3,5	12	063216896010	**MSN224**
8630 DT	Tutte		12/1993 →		3,0	12	063522300090	**MSN2040**
8730	Tutte		→		2,8	12	063227569010	**MSN202**
8830	Tutte		→		2,8	12	063227569010	**MSN202**
9000	Tutte		→		2,8	12	063227569010	**MSN202**
9600,67	Tutte	201,256,401C.I.	01/1979 →		2,8	12	063227569010	**MSN202**
9700	Tutte	201,256,401C.I.	01/1979 →		2,8	12	063227569010	**MSN202**
Combine	620		→		2,8	12	063227569010	**MSN202**
Combine	622		→		2,8	12	063227569010	**MSN202**
County	1164		→		2,8	12	063227569010	**MSN202**
County	654		→		2,8	12	063227569010	**MSN202**
County	754		→		2,8	12	063227569010	**MSN202**
County	764		→		2,8	12	063227569010	**MSN202**
County	774		→		2,8	12	063227569010	**MSN202**
County	944		→		2,8	12	063227569010	**MSN202**
County	964		→		2,8	12	063227569010	**MSN202**
County	974		→		2,8	12	063227569010	**MSN202**
County	TW 1164		→		2,8	12	063227569010	**MSN202**
County	TW 1184		→		2,8	12	063227569010	**MSN202**
CRAWLERS	TK100A	New Holland 93 HP Diesel	→		3,0	12	063522300070	**MSN2039**
CRAWLERS	TK76	New Holland 71 HP Diesel	01/2000 → 01/2004		3,0	12	063522300070	**MSN2039**
CRAWLERS	TK76	Iveco 8045	01/1999 → 01/2004		3,0	12	063522300070	**MSN2039**
CRAWLERS	TK80A	New Holland 77 HP Diesel	→		3,0	12	063522300070	**MSN2039**
CRAWLERS	TK80MA	New Holland 77 HP Diesel	→		3,0	12	063522300070	**MSN2039**
CRAWLERS	TK85	Iveco 8045	01/1999 → 01/2004		3,0	12	063522300070	**MSN2039**
CRAWLERS	TK85	New Holland 80 HP Diesel	01/2000 → 01/2004		3,0	12	063522300070	**MSN2039**
CRAWLERS	TK85M	Iveco 8045	01/1999 → 01/2004		3,0	12	063522300070	**MSN2039**
CRAWLERS	TK85M	New Holland 80 HP Diesel	01/2000 → 01/2004		3,0	12	063522300070	**MSN2039**
CRAWLERS	TK90A	New Holland 90 HP Diesel	→		3,0	12	063522300070	**MSN2039**
CRAWLERS	TK90MA	New Holland 90 HP Diesel	→		3,0	12	063522300070	**MSN2039**
DIGGER	TRENCH	201C.I.	→		2,8	12	063227569010	**MSN202**

					kW	V	LONG	SHORT
FORD NEW HOLLAND								
FARM	3010S	3-165 Ford Diesel	01/1996 → 01/2000		2,6	12	063522235040	**MSN2036**
FARM	3830	3-165 Ford Diesel	01/1992 → 01/1999		2,6	12	063522235040	**MSN2036**
FARM	4010S		01/1996 → 01/2000		2,6	12	063522235040	**MSN2036**
FARM	4030	3-179 Ford Diesel	01/1992 → 01/1996		2,6	12	063522235040	**MSN2036**
FARM	4230	4-220 Ford Diesel	01/1992 → 01/1996		3,0	12	063522300070	**MSN2039**
FARM	4330V	6-220 Ford Diesel	01/1996 → 01/2000		3,0	12	063522300070	**MSN2039**
FARM	4430N	4-238 Ford Diesel	01/1992 → 01/1998		3,0	12	063522300070	**MSN2039**
FARM	4430V	4-220 Ford Diesel	01/1997 → 01/1998		3,0	12	063522300070	**MSN2039**
FARM	4835	4-220 Diesel	01/1995 → 01/1998		3,0	12	063522300070	**MSN2039**
FARM	4835	4-220 Ford Diesel	01/1995 → 01/1998		3,0	12	063522300070	**MSN2039**
FARM	5010S		01/1996 → 01/2000		2,6	12	063522235040	**MSN2036**
L60	Tutte		01/1996 → 01/1997		3,0	12	063522300070	**MSN2039**
L65	Tutte		01/1996 → 01/1997		3,0	12	063522300070	**MSN2039**
L75	Tutte		01/1996 → 01/1997		3,0	12	063522300070	**MSN2039**
L85	Tutte	Iveco 8045.25	01/1996 → 01/1997		3,0	12	063522300070	**MSN2039**
L95	Tutte	Iveco 8045.25	01/1996 → 01/1997		3,0	12	063522300070	**MSN2039**
Speed Power	1112		→		2,8	12	063227569010	**MSN202**
Speed Power	910-912		→		2,8	12	063227569010	**MSN202**
Telescopic Loader	LM640		→		3,0	12	063522300070	**MSN2039**
TL100	Tutte		01/1999 → 01/2004		3,0	12	063522300070	**MSN2039**
TL55	Tutte		01/1999 → 01/2004		3,0	12	063522300070	**MSN2039**
TL60	Tutte		01/1999 → 01/2004		3,0	12	063522300070	**MSN2039**
TL65	Tutte		01/1999 → 01/2004		3,0	12	063522300070	**MSN2039**
TL70	Tutte		01/1999 → 01/2004		3,0	12	063522300070	**MSN2039**
TL80	Tutte		01/1999 → 01/2004		3,0	12	063522300070	**MSN2039**
TL80A	Tutte		01/1997 →		3,0	12	063522300070	**MSN2039**
TL90	Tutte		01/1999 → 01/2004		3,0	12	063522300070	**MSN2039**
TN60DA	Tutte	Iveco	→		2,6	12	063522235040	**MSN2036**
TN70DA	Tutte	Iveco	→		2,6	12	063522235040	**MSN2036**
TN75DA	Tutte	Iveco	→		2,6	12	063522235040	**MSN2036**
TN90G	Tutte		01/1997 → 01/2001		3,0	12	063522300070	**MSN2039**
TT55	Tutte	3 cyl. 55 HP Diesel	→		3,0	12	063522300070	**MSN2039**
TT60A	Tutte	3 cyl. 56 HP Diesel	→		3,0	12	063522300070	**MSN2039**
TT65	Tutte	3 cyl. 65 HP Diesel	→		3,0	12	063522300070	**MSN2039**
TT75	Tutte	4 cyl. 75 HP Diesel	→		3,0	12	063522300070	**MSN2039**
TT75A	Tutte	4 cyl. 75 HP Diesel	→		3,0	12	063522300070	**MSN2039**
TW 10	Tutte		→		2,8	12	063227569010	**MSN202**
TW 15	Tutte		→		2,8	12	063227569010	**MSN202**
TW 20	Tutte		→		2,8	12	063227569010	**MSN202**
TW 25	Tutte		→		2,8	12	063227569010	**MSN202**
TW 30	Tutte		→		2,8	12	063227569010	**MSN202**
TW 35	Tutte		→		2,8	12	063227569010	**MSN202**
TW 5	Tutte		→		2,8	12	063227569010	**MSN202**
UTILITY	TN55		01/1999 → 01/2004		2,6	12	063522235040	**MSN2036**

					kW	V	LONG	SHORT
FORD NEW HOLLAND								
UTILITY	TN55D		01/1999 → 01/2004		2,6	12	063522235040	**MSN2036**
UTILITY	TN60A/DA/SA	New Holland 57 Diesel	→		2,6	12	063522235040	**MSN2036**
UTILITY	TN60VA	New Holland 57 Diesel	01/1999 → 01/2003		2,6	12	063522235040	**MSN2036**
UTILITY	TN65F/G/D	New Holland 65 HP Diesel	01/1999 → 01/2003		2,6	12	063522235040	**MSN2036**
UTILITY	TN65V	New Holland 65 HP Diesel	01/2000 → 01/2004		2,6	12	063522235040	**MSN2036**
UTILITY	TN70	New Holland 67 HP Diesel	01/1999 → 01/2003		2,6	12	063522235040	**MSN2036**
UTILITY	TN70A	New Holland 67 HP Diesel	→		2,6	12	063522235040	**MSN2036**
UTILITY	TN70D	New Holland 67 HP Diesel	01/2000 → 01/2003		2,6	12	063522235040	**MSN2036**
UTILITY	TN70DA	New Holland 67 HP Diesel	→		2,6	12	063522235040	**MSN2036**
UTILITY	TN70F	New Holland 67 HP Diesel	01/2001 → 01/2004		3,0	12	063522300070	**MSN2039**
UTILITY	TN70S	New Holland 67 HP Diesel	01/2000 → 01/2003		2,6	12	063522235040	**MSN2036**
UTILITY	TN70SA	New Holland 67 HP Diesel	→		2,6	12	063522235040	**MSN2036**
UTILITY	TN70VA	New Holland 67 HP Diesel	→		2,6	12	063522235040	**MSN2036**
UTILITY	TN75	New Holland 75 HP Diesel	01/2000 → 01/2003		2,6	12	063522235040	**MSN2036**
UTILITY	TN75A	New Holland 75 HP Diesel	→		2,6	12	063522235040	**MSN2036**
UTILITY	TN75D	New Holland 75 HP Diesel	01/1999 → 01/2003		2,6	12	063522235040	**MSN2036**
UTILITY	TN75DA	New Holland 75 HP Diesel	→		2,6	12	063522235040	**MSN2036**
UTILITY	TN75F	New Holland 75 HP Diesel	01/1997 → 01/2001		3,0	12	063522300070	**MSN2039**
UTILITY	TN75FA	New Holland 75 HP Diesel	→		3,0	12	063522300070	**MSN2039**
UTILITY	TN75S	New Holland 75 HP Diesel	01/1999 → 12/2003		2,6	12	063522235040	**MSN2036**
UTILITY	TN75SA	New Holland 75 HP Diesel	→		2,6	12	063522235040	**MSN2036**
UTILITY	TN75V	New Holland 75 HP Diesel	01/2000 → 01/2004		2,6	12	063522235040	**MSN2036**
UTILITY	TN75VA	New Holland 75 HP Diesel	→		2,6	12	063522235040	**MSN2036**
UTILITY	TN80F	New Holland 80 HP Diesel	01/2001 → 01/2004		3,0	12	063522300070	**MSN2039**
UTILITY	TN85FA	New Holland 82 HP Diesel	→		3,0	12	063522300070	**MSN2039**
UTILITY	TN95F	New Holland 95 HP Diesel	01/2001 → 01/2004		3,0	12	063522300070	**MSN2039**
UTILITY	TN95FA	New Holland 95 HP Diesel	→		3,0	12	063522300070	**MSN2039**
UTILITY	TN95VA	New Holland 95 HP Diesel	→		3,0	12	063522300070	**MSN2039**
GOLDONI								
MOTOCOLTIVATORE	1045 - R		→		2,5	12	063217121010	**MSN226**
MOTOCOLTIVATORE	108	6 LD 325	01/1979 → 07/1982		1,1	12	063521070240	**MSN2010**
MOTOCOLTIVATORE	140	3 LD 510	01/1974 →		1,1	12	063521070240	**MSN2010**
MOTOCOLTIVATORE	142	Acme-ADN 54 W	01/1987 →		1,1	12	063521070240	**MSN2010**
MOTOCOLTIVATORE	144	Ruggerini-RD 901	01/1974 → 01/1987		1,1	12	063521070240	**MSN2010**
MOTOCOLTIVATORE	149	Ruggerini-RF 140	06/1984 →		1,1	12	063521070240	**MSN2010**
MOTOCOLTIVATORE	149	Ruggerini-RF 120	01/1974 → 02/1987		1,1	12	063521070240	**MSN2010**
MOTOCOLTIVATORE	49A	Acme-ADN 37	03/1987 →		1,1	12	063521070240	**MSN2010**
MOTOCOLTIVATORE	49L	6 LD 360	11/1990 →		1,1	12	063521070240	**MSN2010**
MOTOCOLTIVATORE	59A	Acme-ADN 37/2 VW	05/1983 → 12/1990		1,1	12	063521070240	**MSN2010**
MOTOCOLTIVATORE	610	6 LD 360	01/1978 → 12/1985		1,1	12	063521070240	**MSN2010**
MOTOCOLTIVATORE	610	Ruggerini-RD 81	01/1978 → 12/1985		1,1	12	063521070240	**MSN2010**
MOTOCOLTIVATORE	716	Ruggerini-RD 920	01/1974 → 04/1984		1,1	12	063521070240	**MSN2010**
MOTOCOLTIVATORE	FC9	Lomb.-6 LD 360	04/1991 →		1,1	12	063521070240	**MSN2010**

					kW	V	LONG	SHORT
HITTNER								
Ecotrac	Ecotrac - 120	Deutz F6L 914-L06; 86kW			4,0	24	063522310050	**MSN2043**
Ecotrac	Ecotrac - 30	Lombardini 9LD 625-2; 21kW			1,1	12	063521070240	**MSN2010**
HOLDER								
B50	Tutte	Perkins-3.152	01/1976 → 06/1979		2,2	12	063227470010	**MSN184**
B50	Tutte	Perkins-3.152	01/1976 → 06/1979		2,2	12	063227488010	**MSN175**
B51	Tutte	Perkins-3.152	01/1976 → 06/1979		2,2	12	063227470010	**MSN184**
B51	Tutte	Perkins-3.152	01/1976 → 06/1979		2,2	12	063227488010	**MSN175**
HUERLIMANN								
H 345	Tutte	983L	07/1983 → 03/1986		3,5	12	063216884010	**MSN878**
H 345	Tutte	983L	12/1981 → 06/1983		3,5	12	063216884010	**MSN878**
H 355	Tutte	1053P	01/1982 → 06/1983		3,5	12	063216884010	**MSN878**
H 358	Tutte	1000.3W	06/1986 →		3,5	12	063216884010	**MSN878**
H 360	Tutte	H-1103/5	10/1979 → 06/1983		3,5	12	063216884010	**MSN878**
H 470	Tutte	H-1104/6	09/1979 → 06/1983		3,5	12	063216884010	**MSN878**
H 476 - V	Tutte	1000.4W	12/1988 → 12/1991		3,5	12	063216884010	**MSN878**
H 480	Tutte	H-1104/7	04/1979 → 06/1983		3,5	12	063216884010	**MSN878**
H 488 - T	Tutte	1000.4WT	06/1986 →		3,5	12	063216884010	**MSN878**
H 490	Tutte	H-1106/8T	04/1980 → 06/1983		3,5	12	063216884010	**MSN878**
H 496 - T	Tutte	H-1104/9T	04/1984 → 12/1989		3,5	12	063216884010	**MSN878**
H 5110	Tutte	H-1105/10T	12/1980 → 06/1983		3,5	12	063216884010	**MSN878**
H 5110/ 5116T	Tutte	H-1105/11T	04/1984 → 12/1990		3,5	12	063216884010	**MSN878**
H 6130	Tutte	H-1106/12	03/1979 → 06/1981		3,5	12	063216884010	**MSN878**
H 6130/ 6115	Elite	1000.6W	12/1989 →		3,5	12	063216884010	**MSN878**
H 6135	Elite	1000.6WT	12/1989 →		3,5	12	063216884010	**MSN878**
H 6136	Tutte	H-1106/13	04/1984 → 12/1990		3,5	12	063216884010	**MSN878**
H 6160	Tutte	H-1106/15	03/1979 → 03/1981		3,5	12	063216884010	**MSN878**
H 6160/ 6165 - Master	Tutte	1000.6WTI	05/1991 →		3,5	12	063216884010	**MSN878**
H 6190 - Master	Tutte	1000.6WTIR	01/1992 →		3,5	12	063216884010	**MSN878**
HY-MAC								
CRAWLERS EXCAVATOR	1080	Cummins V8-185	01/1973 →		2,2	12	063227486010	**MSN180**
CRAWLERS EXCAVATOR	1080	Cummins V504C	01/1973 →		2,2	12	063227486010	**MSN180**
CRAWLERS EXCAVATOR	1080	Cummins V8-185	01/1973 →		2,8	12	063227592010	**MSN203**
CRAWLERS EXCAVATOR	1080	Cummins V504C	01/1973 →		2,8	12	063227592010	**MSN203**
CRAWLERS EXCAVATOR	1290	Cummins NH220B	01/1973 →		2,2	12	063227486010	**MSN180**

					kW	V	LONG	SHORT
HY-MAC								
CRAWLERS EXCAVATOR	1290	Cummins NH221B-1	01/1973 →		2,2	12	063227486010	**MSN180**
CRAWLERS EXCAVATOR	1290	Cummins NH221B-1	01/1973 →		2,8	12	063227592010	**MSN203**
CRAWLERS EXCAVATOR	1290	Cummins NH220B	01/1973 →		2,8	12	063227592010	**MSN203**
CRAWLERS EXCAVATOR	580C		01/1970 →		2,2	12	063227486010	**MSN180**
CRAWLERS EXCAVATOR	580C		01/1970 →		2,8	12	063227592010	**MSN203**
CRAWLERS EXCAVATOR	590		01/1973 →		2,2	12	063227486010	**MSN180**
CRAWLERS EXCAVATOR	590		01/1973 →		2,8	12	063227592010	**MSN203**
CRAWLERS EXCAVATOR	690		01/1973 →		2,2	12	063227486010	**MSN180**
CRAWLERS EXCAVATOR	690		01/1973 →		2,8	12	063227592010	**MSN203**
CRAWLERS EXCAVATOR	880C	Cummins V8-185	01/1973 →		2,2	12	063227486010	**MSN180**
CRAWLERS EXCAVATOR	880C	Cummins V504C	01/1973 →		2,2	12	063227486010	**MSN180**
CRAWLERS EXCAVATOR	880C	Cummins V8-185	01/1973 →		2,8	12	063227592010	**MSN203**
CRAWLERS EXCAVATOR	880C	Cummins V504C	01/1973 →		2,8	12	063227592010	**MSN203**
EXCAVATORS	880C	Volvo	01/1973 →		2,2	12	063227486010	**MSN180**
EXCAVATORS	880C	Volvo	01/1973 →		2,8	12	063227592010	**MSN203**
Wheeled Excavator	595		01/1973 →		2,2	12	063227486010	**MSN180**
Wheeled Excavator	595		01/1973 →		2,8	12	063227592010	**MSN203**
Wheeled Excavator	596		01/1973 →		2,2	12	063227486010	**MSN180**
Wheeled Excavator	596		01/1973 →		2,8	12	063227592010	**MSN203**
HYUNDAI								
POLISHER RACE	HD3000		01/1973 →		2,2	12	063227486010	**MSN180**
POLISHER RACE	HD3000		01/1973 →		2,8	12	063227592010	**MSN203**
INGERSOLL-RAND								
COMPRESSORS	140SL	Perkins	01/1976 →		2,2	12	063227486010	**MSN180**
COMPRESSORS	140SL		01/1976 →		2,8	12	063227569010	**MSN202**
COMPRESSORS	140SL	Perkins	01/1976 →		2,8	12	063227592010	**MSN203**

					kW	V	LONG	SHORT
INGERSOLL-RAND								
COMPRESSORS	175SL	Perkins	01/1976 →		2,2	12	063227486010	**MSN180**
COMPRESSORS	175SL		01/1976 →		2,8	12	063227569010	**MSN202**
COMPRESSORS	175SL	Perkins	01/1976 →		2,8	12	063227592010	**MSN203**
COMPRESSORS	250LS		01/1976 →		2,8	12	063227569010	**MSN202**
COMPRESSORS	250SL	Perkins	01/1976 →		2,2	12	063227486010	**MSN180**
COMPRESSORS	250SL	Perkins	01/1976 →		2,8	12	063227592010	**MSN203**
COMPRESSORS	DR140S	Perkins	01/1976 →		2,2	12	063227486010	**MSN180**
COMPRESSORS	DR140S		01/1976 →		2,8	12	063227569010	**MSN202**
COMPRESSORS	DR140S	Perkins	01/1976 →		2,8	12	063227592010	**MSN203**
COMPRESSORS	DR175S	Perkins	01/1976 →		2,2	12	063227486010	**MSN180**
COMPRESSORS	DR175S		01/1976 →		2,8	12	063227569010	**MSN202**
COMPRESSORS	DR175S	Perkins	01/1976 →		2,8	12	063227592010	**MSN203**
COMPRESSORS	DR250S	Perkins	01/1976 →		2,2	12	063227486010	**MSN180**
COMPRESSORS	DR250S		01/1976 →		2,8	12	063227569010	**MSN202**
COMPRESSORS	DR250S	Perkins	01/1976 →		2,8	12	063227592010	**MSN203**
IVECO								
AIFO 8031	8031 - 4300		06/1979 → 06/1983		3,5	12	063216831010	**MSN219**
AIFO 8031	8031 - 4300		06/1983 → 12/1984		3,5	12	063216831010	**MSN219**
AIFO 8031	8031 - 5300		01/1985 → 12/1989		3,5	12	063216831010	**MSN219**
AIFO 8031	8031 - I-05.00		01/1990 →		3,5	12	063216831010	**MSN219**
AIFO 8035	8035 - 2300		06/1973 → 06/1983		2,5	12	063217126010	**MSN227**
AIFO 8035	8035 - 2300		06/1983 → 12/1984		2,5	12	063217126010	**MSN227**
AIFO 8035	8035 - 2300		06/1973 → 06/1983		2,6	12	063522235040	**MSN2036**
AIFO 8035	8035 - 2300		06/1983 → 12/1984		3,0	12	063523620390	**MSN2050**
AIFO 8035	8035 - 2300		06/1973 → 06/1983		3,0	12	063523620390	**MSN2050**
AIFO 8040	8040 - 25900		06/1987 →		2,5	12	063217126010	**MSN227**
AIFO 8040	8040 - 25900		06/1987 →		3,0	12	063523620390	**MSN2050**
AIFO 8041	8041 - 2301		06/1974 → 12/1980		2,5	12	063217126010	**MSN227**
AIFO 8041	8041 - 2301		06/1974 → 12/1980		3,0	12	063523620390	**MSN2050**
AIFO 8041	8041 - 4200		06/1979 → 02/1980		2,5	12	063217126010	**MSN227**
AIFO 8041	8041 - 4200		06/1979 → 02/1980		3,0	12	063523620390	**MSN2050**
AIFO 8041	8041 - 4200		03/1980 → 12/1980		3,5	12	063216831010	**MSN219**
AIFO 8041	8041 - 4250		06/1979 → 06/1983		2,5	12	063217126010	**MSN227**
AIFO 8041	8041 - 4250		06/1979 → 06/1983		2,6	12	063522235040	**MSN2036**
AIFO 8041	8041 - 4250		06/1979 → 06/1983		3,0	12	063523620390	**MSN2050**
AIFO 8041	8041 - 4260		01/1984 → 12/1984		2,5	12	063217126010	**MSN227**
AIFO 8041	8041 - 4260		01/1984 → 12/1984		3,0	12	063523620390	**MSN2050**
AIFO 8041	8041 - 4300		06/1979 → 06/1983		3,5	12	063216831010	**MSN219**
AIFO 8041	8041 - 4300		06/1983 → 12/1984		3,5	12	063216831010	**MSN219**
AIFO 8041	8041 - 5260		06/1986 → 09/1988		3,5	12	063216831010	**MSN219**
AIFO 8041	8041 - 5260		06/1987 →		2,5	12	063217126010	**MSN227**
AIFO 8041	8041 - 5260		06/1987 →		3,0	12	063523620390	**MSN2050**
AIFO 8041	8041 - 5300		01/1985 → 12/1989		3,5	12	063216831010	**MSN219**
AIFO 8041	8041 - I-05.00		01/1990 →		3,5	12	063216831010	**MSN219**
AIFO 8041	8041 - I-05.50		01/1990 →		3,5	12	063216831010	**MSN219**

					kW	V	LONG	SHORT
IVECO								
AIFO 8041	8041 - SI-25.00		01/1990 →		3,5	12	063216831010	**MSN219**
AIFO 8045	8045 - 2285		06/1973 → 12/1981		2,5	12	063217126010	**MSN227**
AIFO 8045	8045 - 2285		06/1973 → 12/1981		3,0	12	063523620390	**MSN2050**
AIFO 8045	8045 - 2300		06/1973 → 12/1981		2,5	12	063217126010	**MSN227**
AIFO 8045	8045 - 2300		06/1973 → 12/1981		3,0	12	063523620390	**MSN2050**
AIFO 8051	8051 - 4100		01/1984 → 12/1984		3,5	12	063216831010	**MSN219**
AIFO 8051	8051 - 5200		01/1985 → 12/1989		3,5	12	063216831010	**MSN219**
AIFO 8051	8051 - I-05.00		01/1990 →		3,5	12	063216831010	**MSN219**
AIFO 8060	8060 - 2800		06/1973 → 10/1981		3,5	12	063216831010	**MSN219**
AIFO 8060	8060 - 2811		06/1973 → 12/1980		3,5	12	063216831010	**MSN219**
AIFO 8061	8061-05.30-25		01/1986 → 12/1989		3,5	12	063216831010	**MSN219**
AIFO 8061	8061 - 24000		01/1984 → 12/1985		3,5	12	063216831010	**MSN219**
AIFO 8061	8061 - 25000		01/1986 →		3,5	12	063216831010	**MSN219**
AIFO 8061	8061 - 25010		01/1985 →		3,5	12	063216831010	**MSN219**
AIFO 8061	8061 - 4000		06/1979 → 06/1983		3,5	12	063216831010	**MSN219**
AIFO 8061	8061 - 4000		06/1983 → 12/1984		3,5	12	063216831010	**MSN219**
AIFO 8061	8061 - 4001		01/1984 → 12/1984		3,5	12	063216831010	**MSN219**
AIFO 8061	8061 - 4050		06/1979 → 06/1983		3,5	12	063216831010	**MSN219**
AIFO 8061	8061 - 4051		09/1981 → 06/1983		3,5	12	063216831010	**MSN219**
AIFO 8061	8061 - 4060		06/1978 → 06/1983		3,5	12	063216831010	**MSN219**
AIFO 8061	8061 - 4060		06/1983 → 12/1984		3,5	12	063216831010	**MSN219**
AIFO 8061	8061 - 4061		09/1981 → 06/1983		3,5	12	063216831010	**MSN219**
AIFO 8061	8061 - 4061		06/1983 → 07/1983		3,5	12	063216831010	**MSN219**
AIFO 8061	8061 - 5000		01/1985 → 12/1989		3,5	12	063216831010	**MSN219**
AIFO 8061	8061 - 5260		06/1986 → 09/1988		3,5	12	063216831010	**MSN219**
AIFO 8061	8061 - 5260		06/1987 → 12/1989		2,5	12	063217126010	**MSN227**
AIFO 8061	8061 - 5260		06/1987 → 12/1989		3,0	12	063523620390	**MSN2050**
AIFO 8061	8061 - 5260		01/1990 →		3,5	12	063216831010	**MSN219**
AIFO 8061	8061 - I-05.00		01/1990 →		3,5	12	063216831010	**MSN219**
AIFO 8061	8061 - I-25.00		01/1990 →		3,5	12	063216831010	**MSN219**
AIFO 8061	8061 - SI-35.05		12/1991 →		3,5	12	063216831010	**MSN219**
AIFO 8061	8061 - SRI-25.00		10/1989 →		3,5	12	063216831010	**MSN219**
AIFO 8065	8065 - 2000		06/1973 → 12/1980		3,5	12	063216831010	**MSN219**
AIFO 8141	8141 - 61200		10/1981 → 05/1983		2,5	12	063217126010	**MSN227**
AIFO 8141	8141 - 61200		10/1981 → 05/1983		2,6	12	063522235040	**MSN2036**
AIFO 8141	8141 - 61200		10/1981 → 05/1983		3,0	12	063523620390	**MSN2050**
AIFO 8360	8360.05.200		→		3,5	12	063216896010	**MSN224**
AIFO 8360	8360.05.200		→		3,0	12	063522300090	**MSN2040**
AIFO 8361	8361.05.500		→		3,5	12	063216896010	**MSN224**
AIFO 8361	8361.05.500		→		3,0	12	063522300090	**MSN2040**
AIFO 8361	8361.05.500/530		→		3,5	12	063216896010	**MSN224**
AIFO 8361	8361.05.500/530		→		3,0	12	063522300090	**MSN2040**
AIFO 8361	8361.05.530		→		3,5	12	063216896010	**MSN224**
AIFO 8361	8361.05.530		→		3,0	12	063522300090	**MSN2040**

					kW	V	LONG	SHORT
IVECO								
AIFO 8361	8361.25.500		→		3,5	12	063216896010	**MSN224**
AIFO 8361	8361.25.500		→		3,0	12	063522300090	**MSN2040**
AIFO CO	CO - 3/130l		06/1971 → 12/1981		4,0	24	063216733010	**MSN214**
AIFO CO	CO - 3l		06/1971 → 12/1981		4,0	24	063216733010	**MSN214**
AIFO CO	CO - 3l Var		06/1971 → 12/1981		4,0	24	063216733010	**MSN214**
AIFO CP	CP - 3l		06/1971 → 12/1981		4,0	24	063216733010	**MSN214**
JCB LANDPOWER								
BACKHOE LOADERS	3CX-4	Perkins 4.236	01/1994 →		2,2	12	063227486010	**MSN180**
BACKHOE LOADERS	3CX-4	Perkins 4.236	01/1994 →		2,8	12	063227592010	**MSN203**
BACKHOE LOADERS	4CX	Perkins: TC	→		2,2	12	063227486010	**MSN180**
BACKHOE LOADERS	4CX	Perkins: TC	→		2,8	12	063227592010	**MSN203**
COMPACT EXCAVATORS	8014CST	403D-II-Tier3; 20HP	→		2,0	12	063521090350	**MSN2023**
COMPACT EXCAVATORS	8016CTS	403D-II-Tier3; 20HP	→		2,0	12	063521090350	**MSN2023**
COMPACT EXCAVATORS	8018CTS	403D-II-Tier3; 20HP	→		2,0	12	063521090350	**MSN2023**
COMPACT EXCAVATORS	8020CTS	403D-II-Tier3; 20HP	→		2,0	12	063521090350	**MSN2023**
COMPACT EXCAVATORS	8025ZTS	403D-IS-Tirer III	→		2,0	12	063521090350	**MSN2023**
COMPACT EXCAVATORS	8030CTS/ ZTS	403D-II-Tier3	→		2,0	12	063521090350	**MSN2023**
COMPACT EXCAVATORS	8035ZTS	403D-IS-Tirer III	→		2,0	12	063521090350	**MSN2023**
COMPACT EXCAVATORS	8045ZTS	Perkins 404-22D; Tier 3	→		2,0	12	063521090350	**MSN2023**
COMPACT EXCAVATORS	8050ZTS	Perkins 404-22C; Tier III	→		2,0	12	063521090350	**MSN2023**
COMPACT TRACK LOADERS	180T/HF	Perkins 404DT-22	→		2,0	12	063521090350	**MSN2023**
COMPACT TRACK LOADERS	190T/HF	Perkins 404DT-22	→		2,0	12	063521090350	**MSN2023**
EXCAVATORS	805		01/1976 → 01/1978		2,8	12	063227569010	**MSN202**
EXCAVATORS	806/806B		01/1973 → 01/1982		2,8	12	063227569010	**MSN202**
EXCAVATORS	807/807B		→		2,8	12	063227569010	**MSN202**
EXCAVATORS	807C		01/1982 →		2,2	12	063227486010	**MSN180**
EXCAVATORS	807C		01/1982 →		2,8	12	063227592010	**MSN203**
FASTRAC	1115		01/1995 → 01/1997		2,2	12	063227486010	**MSN180**
FASTRAC	1115		01/1995 → 01/1997		2,8	12	063227592010	**MSN203**
FASTRAC	125/135/155/185		01/1993 →		2,2	12	063227486010	**MSN180**
FASTRAC	125/135/155/185		01/1993 →		2,8	12	063227592010	**MSN203**

					kW	V	LONG	SHORT
JCB LANDPOWER								
FASTRAC	125/145		01/1991 → 01/1993		2,2	12	063227486010	**MSN180**
FASTRAC	125/145		01/1991 → 01/1993		2,8	12	063227592010	**MSN203**
LOADERS	420TU	6-354 Perkins	01/1982 → 01/1991		2,2	12	063227486010	**MSN180**
LOADERS	420TU	6-354 Perkins	01/1982 → 01/1991		2,8	12	063227592010	**MSN203**
LOADERS	430		01/1983 →		2,2	12	063227486010	**MSN180**
LOADERS	430		01/1983 →		2,8	12	063227592010	**MSN203**
MICRO EXCAVATORS	8008CTS	Perkins; 403D-07 9kW	→		2,0	12	063521090350	**MSN2023**
MICRO EXCAVATORS	8010CTS	Perkins; 403D-II; 18,5HP	→		2,0	12	063521090350	**MSN2023**
POWER SLIDE EXCAVATORS	811/812/814		01/1985 →		2,2	12	063227486010	**MSN180**
POWER SLIDE EXCAVATORS	811/812/814		01/1985 →		2,8	12	063227592010	**MSN203**
POWER SLIDE EXCAVATORS	817/818/820		01/1985 →		2,2	12	063227486010	**MSN180**
POWER SLIDE EXCAVATORS	817/818/820		01/1985 →		2,8	12	063227592010	**MSN203**
TELETRUKS	TLT35	Deutz D2011 L04W	→		2,3	12	063522230160	**MSN2035**
WASTEMSTER TELETRUKS	TLT35-WM	Deutz D2011 L04W	→		2,3	12	063522230160	**MSN2035**
JOHN DEERE								
3029DF/TF	Tutte	3-cyl.	→		3,5	12	063206834010	**MSN873**
4240/4440/4450	Tutte		→		1,2	12	063521070780	**MSN2016**
6059DF/HF/TF	Tutte	6-cyl	→		3,5	12	063206834010	**MSN873**
Combine	MD1065	6.359TZ-03	03/1994 →		3,5	12	063206834010	**MSN873**
Combine	MD1075	6.359TZ-02	04/1987 → 02/1992		3,5	12	063206834010	**MSN873**
Combine	MD1075 Hydro/4	6.359TZ-02	03/1994 →		3,5	12	063206834010	**MSN873**
FARM	1040	3.179DL-06	09/1979 → 10/1986		3,5	12	063206834010	**MSN873**
FARM	2040F/S	4.239DL-04	09/1979 → 10/1986		3,5	12	063206834010	**MSN873**
FARM	2150	3.179DL-01	05/1982 →		3,5	12	063206834010	**MSN873**
FARM	2550	4.239DL-06	05/1982 →		3,5	12	063206834010	**MSN873**
FARM	2750	4.239TL-04	05/1982 →		3,5	12	063206834010	**MSN873**
FARM	3040		05/1982 →		3,5	12	063206834010	**MSN873**
FARM	6100	4039D	01/1992 → 01/1996		3,5	12	063206834010	**MSN873**
FARM	6110L	4045T	01/1998 → 01/2001		3,5	12	063206834010	**MSN873**
FARM	6200-2L	4039T	01/1992 → 01/1998		3,5	12	063206834010	**MSN873**
FARM	6200-4	4039T	01/1992 → 01/1998		3,5	12	063206834010	**MSN873**
FARM	6210	4045T	10/1998 → 01/2001		3,5	12	063206834010	**MSN873**
FARM	6300-2	4039T	01/1992 → 01/1998		3,5	12	063206834010	**MSN873**
FARM	6300-4	4039T	01/1992 → 01/1998		3,5	12	063206834010	**MSN873**
FARM	6310	4045T	01/1998 → 01/2001		3,5	12	063206834010	**MSN873**
FARM	6400, L	4045T	01/1992 → 01/1998		3,5	12	063206834010	**MSN873**
FARM	6400-2/4		01/1992 → 01/1998		3,5	12	063206834010	**MSN873**

					kW	V	LONG	SHORT
JOHN DEERE								
FARM	6405	4045T	01/1998 → 01/2001		3,5	12	063206834010	**MSN873**
FARM	6410	4045T	01/1998 → 01/2001		3,5	12	063206834010	**MSN873**
FARM	6500-2	4045T	01/1996 → 01/1998		3,5	12	063206834010	**MSN873**
FARM	6500-4	4045T	01/1996 → 01/1998		3,5	12	063206834010	**MSN873**
JD310	Tutte	3.179DL-03	03/1974 → 10/1988		3,5	12	063206834010	**MSN873**
JD350A	Tutte	3.152DL-10	03/1971 → 10/1988		3,5	12	063206834010	**MSN873**
JD400A	Tutte	4202, 4219	01/1971 → 12/1979		3,5	12	063206834010	**MSN873**
JD410	Tutte	4.219DL-09	03/1974 → 10/1988		3,5	12	063206834010	**MSN873**
JD450A/B/C	Tutte	4202, 4219	01/1971 → 12/1979		3,5	12	063206834010	**MSN873**
UTILITY	840	3.179DL-04	09/1979 → 01/1984		3,5	12	063206834010	**MSN873**
UTILITY	940	3.179DL-05	09/1979 → 10/1986		3,5	12	063206834010	**MSN873**
LAMBORGHINI (SAME DEUTZ-FAHR GROUP)								
1000 - 3W	Tutte		01/1987 →		3,5	12	063216884010	**MSN878**
1000 - 4W	Tutte		01/1987 →		3,5	12	063216884010	**MSN878**
1000 - 4WT	Tutte		01/1987 →		3,5	12	063216884010	**MSN878**
1000 - 6W	Tutte		12/1990 →		3,5	12	063216884010	**MSN878**
1000 - 6WT	Tutte		12/1990 →		3,5	12	063216884010	**MSN878**
1000 - 6WTI	Tutte		09/1990 →		3,5	12	063216884010	**MSN878**
1000 - 6WTIR	Tutte		02/1992 →		3,5	12	063216884010	**MSN878**
1356 - DT	Tutte	H1106-12	12/1980 → 12/1984		3,5	12	063216884010	**MSN878**
1556	Tutte	H1106-15	06/1981 → 12/1984		3,5	12	063216884010	**MSN878**
345 - F	Tutte	983L	03/1988 →		3,5	12	063216884010	**MSN878**
573 - 60N	Tutte	1000.3W	02/1988 → 11/1990		3,5	12	063216884010	**MSN878**
574 - 60N	Tutte	1000.3W	02/1988 → 11/1990		3,5	12	063216884010	**MSN878**
654 - DT	Tutte	Same-984P	07/1977 → 12/1981		3,5	12	063216884010	**MSN878**
674 - 70	Tutte	1000.4W	06/1986 →		3,5	12	063216884010	**MSN878**
674 - 70N	Tutte	1000.4W	06/1986 →		3,5	12	063216884010	**MSN878**
684 - DT	Tutte	984P	01/1982 → 12/1985		3,5	12	063216884010	**MSN878**
70N Basso - 674	Tutte	1000.4W	06/1986 →		3,5	12	063216884010	**MSN878**
754 - DT	Tutte	Same-984P	11/1976 → 01/1982		3,5	12	063216884010	**MSN878**
774 - 80	Tutte	1000.4W	06/1986 →		3,5	12	063216884010	**MSN878**
774 - 80DT	Tutte	1000.4W	06/1986 →		3,5	12	063216884010	**MSN878**
774 - 80N	Tutte	1000.4W	06/1986 →		3,5	12	063216884010	**MSN878**
775 - 80N	Tutte	1000.4W	06/1987 →		3,5	12	063216884010	**MSN878**
874 - 90	Tutte	1000.4WT	06/1986 →		3,5	12	063216884010	**MSN878**
916 - 3W	Tutte		01/1984 → 01/1987		3,5	12	063216884010	**MSN878**
916 - 4W	Tutte		01/1984 → 01/1987		3,5	12	063216884010	**MSN878**
916 - 6W	Tutte		01/1987 → 03/1988		3,5	12	063216884010	**MSN878**
916 - 6WT	Tutte		01/1987 → 03/1988		3,5	12	063216884010	**MSN878**
C 684 - L/N	Tutte	100.4P	04/1983 → 12/1983		3,5	12	063216884010	**MSN878**
C 754	Tutte	105.4P	01/1980 → 12/1984		3,5	12	063216884010	**MSN878**
C 754.80	Tutte	1000.4W	06/1986 →		3,5	12	063216884010	**MSN878**
C 784 - L	Tutte	105.4P	04/1983 → 12/1984		3,5	12	063216884010	**MSN878**
Formula - 115	Tutte	1000.6W	12/1989 →		3,5	12	063216884010	**MSN878**
Formula - 135	Tutte	1000.6WT	12/1989 →		3,5	12	063216884010	**MSN878**

					kW	V	LONG	SHORT
LAMBORGHINI (SAME DEUTZ-FAHR GROUP)								
R 1056 DT	Tutte	Same-986/3	02/1977 → 07/1979		3,5	12	063216884010	**MSN878**
R 613 DT	Tutte	105.3P	01/1982 → 02/1988		3,5	12	063216884010	**MSN878**
R 653 F - 654DT	Tutte	105.3P	03/1982 → 12/1985		3,5	12	063216884010	**MSN878**
R 684 F	Tutte	984P	03/1982 → 12/1985		3,5	12	063216884010	**MSN878**
R 714 DT - 2RM	Tutte	100.4P	03/1984 → 02/1988		3,5	12	063216884010	**MSN878**
R 724 F	Tutte	105.4P	02/1982 → 04/1986		3,5	12	063216884010	**MSN878**
R 754	Tutte	105.4P	01/1982 → 12/1985		3,5	12	063216884010	**MSN878**
R 854 DT - 2RM	Tutte	105.4P	11/1976 → 12/1985		3,5	12	063216884010	**MSN878**
R 955 DT - 2RM	Tutte	105.5P	06/1979 → 12/1985		3,5	12	063216884010	**MSN878**
Racing - 165	Tutte	1000.6WTI	05/1991 →		3,5	12	063216884010	**MSN878**
Racing - 190	Tutte	1000.6WTIR	01/1992 →		3,5	12	063216884010	**MSN878**
LANDINI								
10000S	Tutte	A6.354.4	→		2,8	12	063227602010	**MSN199**
12500	Tutte	A6.354.4	→		2,8	12	063227602010	**MSN199**
13000	Tutte	A6.354.4	→		2,8	12	063227602010	**MSN199**
14500	Tutte	AT6.354.4	→		2,8	12	063227602010	**MSN199**
50	Tutte	AD3.152	→		2,2	12	063227470010	**MSN184**
50	Tutte	AD3.152	→		2,2	12	063227488010	**MSN175**
5560 - F/L	Tutte	AD3.152	→		2,2	12	063227470010	**MSN184**
5560 - F/L	Tutte	AD3.152	→		2,2	12	063227488010	**MSN175**
5560 - V	Tutte	AD3.152	→		2,2	12	063227470010	**MSN184**
5560 - V	Tutte	AD3.152	→		2,2	12	063227488010	**MSN175**
5860	Tutte	AD3.152	→		2,2	12	063227470010	**MSN184**
5860	Tutte	AD3.152	→		2,2	12	063227488010	**MSN175**
60	Tutte	T3.1524	→		2,2	12	063227470010	**MSN184**
60	Tutte	T3.1524	→		2,2	12	063227488010	**MSN175**
6060	Tutte	T3.1524	→		2,2	12	063227470010	**MSN184**
6060	Tutte	T3.1524	→		2,2	12	063227488010	**MSN175**
6060 - F/L/V	Tutte	T3.1524	→		2,2	12	063227470010	**MSN184**
6060 - F/L/V	Tutte	T3.1524	→		2,2	12	063227488010	**MSN175**
65	Tutte	A4.236	→		2,8	12	063227602010	**MSN199**
6560 - F/L/V	Tutte	A4.236	→		2,8	12	063227602010	**MSN199**

					kW	V	LONG	SHORT
LANDINI								
6860	Tutte	A4.236	→		2,8	12	063227602010	**MSN199**
6880	Tutte	A4.236	→		2,8	12	063227602010	**MSN199**
75	Tutte	A4.236	→		2,8	12	063227602010	**MSN199**
7560 - F/L	Tutte	A4.236	→		2,8	12	063227602010	**MSN199**
7860	Tutte	A4.236	→		2,8	12	063227602010	**MSN199**
7880	Tutte	A4.236	→		2,8	12	063227602010	**MSN199**
85	Tutte	A4.248	→		2,8	12	063227602010	**MSN199**
8560 - F/L	Tutte	A4.248	→		2,8	12	063227602010	**MSN199**
8860	Tutte	A4.248	→		2,8	12	063227602010	**MSN199**
8880	Tutte	A4.248	→		2,8	12	063227602010	**MSN199**
9080	Tutte	T4.236	→		2,8	12	063227602010	**MSN199**
95	Tutte	T4.236	→		2,8	12	063227602010	**MSN199**
9880	Tutte	T4.236	→		2,8	12	063227602010	**MSN199**
ADVANTAGE - 60	Tutte	T3152 Perkins	→		2,2	12	063227470010	**MSN184**
ADVANTAGE - 60	Tutte	T3152 Perkins	→		2,2	12	063227488010	**MSN175**
ADVANTAGE - 65	Tutte	4236 Perkins	→		2,2	12	063227470010	**MSN184**
ADVANTAGE - 65	Tutte	4236 Perkins	→		2,2	12	063227488010	**MSN175**
BLIZZARD	Tutte	Perkins T3152	→		2,2	12	063227470010	**MSN184**
BLIZZARD	Tutte	Perkins T3152	→		2,2	12	063227488010	**MSN175**
C - 75	Tutte	A4.236	→		2,8	12	063227602010	**MSN199**
C - 85	Tutte	A4.248	→		2,8	12	063227602010	**MSN199**
C - 95	Tutte	T4.236	→		2,8	12	063227602010	**MSN199**
CF - 5030	Tutte	AD3.152	→		2,2	12	063227470010	**MSN184**
CF - 5030	Tutte	AD3.152	→		2,2	12	063227488010	**MSN175**
CF - 5830	Tutte	AD3.152	→		2,2	12	063227470010	**MSN184**
CF - 5830	Tutte	AD3.152	→		2,2	12	063227488010	**MSN175**
CF - 6060	Tutte	T3.1524	→		2,2	12	063227470010	**MSN184**
CF - 6060	Tutte	T3.1524	→		2,2	12	063227488010	**MSN175**
CF - 6830	Tutte	A4.236	→		2,8	12	063227602010	**MSN199**
CF - 75	Tutte	A4.236	→		2,8	12	063227602010	**MSN199**
CF - 85	Tutte	A4.248	→		2,8	12	063227602010	**MSN199**
LEGEND	Tutte	Perkins 1006-6HR3	→		2,2	12	063227486010	**MSN180**
LEGEND	Tutte	Perkins 1006-6HR3	→		2,8	12	063227592010	**MSN203**

					kW	V	LONG	SHORT
LANSING BAGNALL								
FODR 5 6000	Tutte		→		2,8	12	063227599010	**MSN541**
LANZ								
NF	Tutte	MWM-D325-2	04/1977 → 12/1980		3,5	12	063296843010	**MSN887**
NF	Tutte	MWM-D325-2	04/1977 → 12/1980		2,4	12	063523620760	**MSN2051**
NI - F/R	Tutte	MWM-D325-2	04/1977 → 12/1980		3,5	12	063296843010	**MSN887**
NI - F/R	Tutte	MWM-D325-2	04/1977 → 12/1980		2,4	12	063523620760	**MSN2051**
NO	Tutte	MWM-D325-2	04/1977 → 12/1980		3,5	12	063296843010	**MSN887**
NO	Tutte	MWM-D325-2	04/1977 → 12/1980		2,4	12	063523620760	**MSN2051**
LAVERDA								
3300	Tutte	8051.04.100	01/1983 → 12/1986		3,5	12	063216831010	**MSN219**
3300 - AL	Tutte	8051I005	04/1983 →		3,5	12	063216831010	**MSN219**
3350	Tutte	8065I	01/1983 → 06/1986		3,5	12	063216831010	**MSN219**
3350 - AL	Tutte	8061SI	01/1983 → 12/1986		3,5	12	063216831010	**MSN219**
3400	Tutte	8061I005	05/1986 →		3,5	12	063216831010	**MSN219**
3450	Tutte	8065I	01/1983 → 12/1984		3,5	12	063216831010	**MSN219**
3500	Tutte	8061I05	01/1985 →		3,5	12	063216831010	**MSN219**
3550	Tutte	8061SI05	03/1985 →		3,5	12	063216831010	**MSN219**
3600	Tutte	8061SI	01/1983 → 06/1986		3,5	12	063216831010	**MSN219**
3650	Tutte	8061I05	06/1985 →		3,5	12	063216831010	**MSN219**
3700	Tutte		01/1983 → 12/1985		3,5	12	063216896010	**MSN224**
3700	Tutte		01/1983 → 12/1985		3,0	12	063522300090	**MSN2040**
3750	Tutte	8061SI25	06/1985 →		3,5	12	063216831010	**MSN219**
3790	Tutte		06/1985 →		3,5	12	063216896010	**MSN224**
3790	Tutte		06/1985 →		3,0	12	063522300090	**MSN2040**
3850	Tutte		04/1985 →		3,5	12	063216896010	**MSN224**
3850	Tutte		01/1991 →		3,5	12	063216896010	**MSN224**
3850	Tutte		04/1985 →		3,0	12	063522300090	**MSN2040**
3850	Tutte		01/1991 →		3,0	12	063522300090	**MSN2040**
3890	Tutte		03/1986 →		3,5	12	063216896010	**MSN224**
3890	Tutte		03/1986 →		3,0	12	063522300090	**MSN2040**
COMBINE	M 150		01/1971 → 01/1975		2,2	12	063227486010	**MSN180**
COMBINE	M 150		01/1971 → 01/1975		2,8	12	063227592010	**MSN203**
COMBINE	M 150		→		2,8	12	063227599010	**MSN541**
LINER CONCRETE								
GIRAFFE	Tutte		01/1976 →		2,2	12	063227486010	**MSN180**
GIRAFFE	Tutte		01/1976 →		2,8	12	063227592010	**MSN203**
LOMBARDINI								
10LD - 360.2	Tutte		01/1982 → 01/1984		1,1	12	063521070240	**MSN2010**
10LD - 400.2	Tutte		05/1983 → 12/1984		1,1	12	063521070240	**MSN2010**
10LD - 400.2/B1	Tutte		01/1984 →		1,1	12	063521070240	**MSN2010**
15LD - 315	Tutte		→		1,1	12	063521070460	**MSN2011**
15LD - 350	Tutte		→		1,1	12	063521070460	**MSN2011**
15LD - 400	Tutte		→		1,1	12	063521070460	**MSN2011**
15LD - 440	Tutte		→		1,1	12	063521070460	**MSN2011**
3LD - 450	Tutte		03/1992 →		1,1	12	063521070240	**MSN2010**

					kW	V	LONG	SHORT
LOMBARDINI								
3LD - 510	Tutte		03/1992 →		1,1	12	063521070240	**MSN2010**
3LD - 510/L	Tutte		03/1992 →		1,1	12	063521070240	**MSN2010**
6LD - 325C	Tutte		03/1992 →		1,1	12	063521070240	**MSN2010**
6LD - 360	Tutte		01/1982 →		1,1	12	063521070240	**MSN2010**
6LD - 360/V	Tutte		01/1982 →		1,1	12	063521070240	**MSN2010**
6LD - 400	Tutte		11/1983 →		1,1	12	063521070240	**MSN2010**
6LD - 435	Tutte		03/1992 →		1,1	12	063521070240	**MSN2010**
6LD - 435V	Tutte		03/1992 →		1,1	12	063521070240	**MSN2010**
6LD 400	Tutte	DGM001149-53720M	→		1,1	12	063521070580	**MSN2013**
7LD 665F	Tutte		01/1992 →		1,4	12	063521150350	**MSN2030**
7LD 740F	Tutte		01/1992 →		1,4	12	063521150350	**MSN2030**
8LD 740.2	Tutte		01/1992 →		1,4	12	063521150350	**MSN2030**
904	Tutte		01/1995 →		1,4	12	063521150350	**MSN2030**
9LD - 625.2	Tutte		01/1988 →		1,1	12	063521070240	**MSN2010**
9LD 561.2 / 2L	Tutte		01/1992 →		1,4	12	063521150350	**MSN2030**
9LD 561.2 / 2W	Tutte		01/1992 →		1,4	12	063521150350	**MSN2030**
9LD 625.2	Tutte		01/1992 →		1,4	12	063521150350	**MSN2030**
Agricoli	Tutte		→		1,8	12	063521090470	**MSN2024**
Diesel engine	Tutte		→		1,6	12	063521090120	**MSN2022**
LDA - 450	Tutte		01/1968 → 12/1981		1,1	12	063521070240	**MSN2010**
LDA - 510	Tutte		04/1970 → 12/1981		1,1	12	063521070240	**MSN2010**
LDA - 80	Tutte		07/1968 → 12/1976		1,1	12	063521070240	**MSN2010**
LDAL - 80	Tutte		07/1968 → 12/1979		1,1	12	063521070240	**MSN2010**
LDAM - 450	Tutte		01/1968 → 12/1979		1,1	12	063521070240	**MSN2010**
LDAM - 672	Tutte		04/1977 →		3,5	12	063296843010	**MSN887**
LDAM - 672	Tutte		04/1977 →		2,4	12	063523620760	**MSN2051**
LDAM - 674	Tutte		07/1976 → 12/1981		3,5	12	063296843010	**MSN887**
LDAM - 674	Tutte		07/1976 → 12/1981		2,4	12	063523620760	**MSN2051**
LDAM - 832	Tutte		04/1977 → 12/1979		3,5	12	063296843010	**MSN887**
LDAM - 832	Tutte		04/1977 → 12/1979		2,4	12	063523620760	**MSN2051**
LDAM - 833	Tutte		07/1976 → 12/1979		3,5	12	063296843010	**MSN887**
LDAM - 833	Tutte		07/1976 → 12/1979		2,4	12	063523620760	**MSN2051**
LDAM - 834	Tutte		07/1976 → 12/1979		3,5	12	063296843010	**MSN887**
LDAM - 834	Tutte		07/1976 → 12/1979		2,4	12	063523620760	**MSN2051**
LDW - 1204/T	Tutte		→		1,1	12	063521070620	**MSN2014**
LDW - 1204M	Tutte	33HK	→		1,1	12	063521070620	**MSN2014**
LDW - 502	Tutte		→		1,1	12	063521070620	**MSN2014**
LDW - 602	Tutte		→		1,1	12	063521070620	**MSN2014**
LDW - 702	Tutte	20HK	→		1,1	12	063521070620	**MSN2014**
LDW - 702M	Tutte	SD (2-cyl, 13,2kW)	→		1,1	12	063521070620	**MSN2014**
LDW - 903	Tutte		→		1,1	12	063521070620	**MSN2014**
LDW 1003	Tutte		→		1,4	12	063521150350	**MSN2030**

					kW	V	LONG	SHORT
LOMBARDINI								
LDW 702	Tutte		→		1,4	12	063521150350	**MSN2030**
LWD - 502	Tutte		→		1,1	12	063521074300	**MSN2018**
MASSEY FERGUSON								
Cane Harvester	MF 102	Perkins-AT6.354	01/1973 →		2,8	12	063227602010	**MSN199**
Cane Harvester	MF 102	Perkins-A6.372	01/1972 →		2,8	12	063227602010	**MSN199**
Cane Harvester	MF 105		01/1977 →		2,8	12	063227602010	**MSN199**
Cane Harvester	MF 201		01/1972 → 01/1977		2,8	12	063227602010	**MSN199**
Cane Harvester	MF 205		01/1977 → 01/1978		2,8	12	063227602010	**MSN199**
Combine Harvester	MF 20		01/1969 → 01/1981		2,8	12	063227593010	**MSN540**
Combine Harvester	MF 20		01/1970 → 12/1981		2,5	12	063207145010	**MSN874**
Combine Harvester	MF 206		→		2,8	12	063227599010	**MSN541**
Combine Harvester	MF 206		01/1973 →		2,8	12	063227602010	**MSN199**
Combine Harvester	MF 307		→		2,8	12	063227599010	**MSN541**
Combine Harvester	MF 307		01/1973 →		2,8	12	063227602010	**MSN199**
Combine Harvester	MF 487		→		2,8	12	063227599010	**MSN541**
Combine Harvester	MF 487		01/1969 → 01/1973		2,8	12	063227602010	**MSN199**
Combine Harvester	MF 506		→		2,8	12	063227599010	**MSN541**
Combine Harvester	MF 506		01/1975 →		2,8	12	063227602010	**MSN199**
Combine Harvester	MF 520		→		2,8	12	063227599010	**MSN541**
Combine Harvester	MF 520	Perkins A6.354	01/1971 →		2,8	12	063227602010	**MSN199**
Combine Harvester	MF 525		→		2,8	12	063227599010	**MSN541**
Combine Harvester	MF 525	Perkins A6.354	01/1971 →		2,8	12	063227602010	**MSN199**
Combine Harvester	TX 45		→		2,8	12	063227599010	**MSN541**
Combine Harvester	TX 45		01/1969 → 01/1974		2,8	12	063227602010	**MSN199**
CRAWLER	MF 134 - C		01/1973 →		2,2	12	063227470010	**MSN184**
CRAWLER	MF 134 - C		01/1973 →		2,2	12	063227488010	**MSN175**

					kW	V	LONG	SHORT
MASSEY FERGUSON								
CRAWLER	MF 134 C - 134 C		01/1969 →		2,5	12	063207145010	**MSN874**
CRAWLER TRACTOR	MF 200 - B		01/1969 → 12/1992		2,2	12	063227486010	**MSN180**
CRAWLER TRACTOR	MF 200 - B		01/1969 → 12/1992		2,8	12	063227592010	**MSN203**
ENGINE	Engines Tra-vaux publics		→		2,8	12	063227599010	**MSN541**
Harvester	MF 102		→		2,8	12	063227599010	**MSN541**
Harvester	MF 105		→		2,8	12	063227599010	**MSN541**
Harvester	MF 201		→		2,8	12	063227599010	**MSN541**
Harvester	MF 205		→		2,8	12	063227599010	**MSN541**
LOADER	MF 11		→		2,8	12	063227599010	**MSN541**
LOADER	MF 11		01/1977 →		2,8	12	063227602010	**MSN199**
MF 102-A6.372-AT 6.354	Tutte		01/1972 →		2,8	12	063227599010	**MSN541**
MF 1080	Tutte		→		2,8	12	063227599010	**MSN541**
MF 1080 - S-4RM	Tutte	Perkins A4.318	→		2,8	12	063227602010	**MSN199**
MF 1080 - Series Tractor	Tutte	Perkins A4.318	01/1971 → 01/1974		2,8	12	063227602010	**MSN199**
MF 1085	Tutte	A4.318	→		2,8	12	063227602010	**MSN199**
MF 11 105-1100-12500	Tutte		01/1977 →		2,8	12	063227599010	**MSN541**
MF 1100	Tutte		→		2,8	12	063227599010	**MSN541**
MF 1100	Tutte	Perkins A6.354	01/1977 →		2,8	12	063227602010	**MSN199**
MF 1104	Tutte		→		2,8	12	063227599010	**MSN541**
MF 1104	Tutte		01/1973 →		2,8	12	063227602010	**MSN199**
MF 1114	Tutte		01/1977 →		2,8	12	063227599010	**MSN541**
MF 1114	Tutte	Perkins A6.354	01/1977 →		2,8	12	063227602010	**MSN199**
MF 1200	Tutte		01/1971 → 01/1979		2,2	12	063227486010	**MSN180**
MF 1200	Tutte		01/1971 → 01/1979		2,8	12	063227592010	**MSN203**
MF 1250 Series	Tutte		→		2,8	12	063227599010	**MSN541**
MF 1250 Series	Tutte	Perkins A6.354.4	01/1977 →		2,8	12	063227602010	**MSN199**
MF 133	Tutte		01/1966 → 01/1976		2,8	12	063227593010	**MSN540**
MF 133 - Standard/Super	Tutte		01/1969 →		2,5	12	063207145010	**MSN874**
MF 133 - Standard/Super	Tutte		01/1969 →		2,2	12	063227470010	**MSN184**
MF 133 - Standard/Super	Tutte		01/1969 →		2,2	12	063227488010	**MSN175**
MF 135	Tutte		01/1975 → 12/1978		2,5	12	063207145010	**MSN874**
MF 135	Tutte	Perkins AD3.152	01/1969 →		2,2	12	063227470010	**MSN184**
MF 135	Tutte		01/1975 → 01/1978		2,2	12	063227470010	**MSN184**

					kW	V	LONG	SHORT
MASSEY FERGUSON								
MF 135	Tutte	Perkins AD3.152	01/1969 →	◎	2,2	12	063227488010	**MSN175**
MF 135	Tutte		01/1975 → 01/1978	◎	2,2	12	063227488010	**MSN175**
MF 135	Tutte		01/1966 → 01/1979		2,8	12	063227593010	**MSN540**
MF 140	Tutte		01/1971 →		2,8	12	063227593010	**MSN540**
MF 140	Tutte		01/1989 → 04/1991		2,5	12	063207145010	**MSN874**
MF 140 - Vineyard	Tutte		01/1969 →	◎	2,2	12	063227470010	**MSN184**
MF 140 - Vineyard	Tutte		01/1969 →	◎	2,2	12	063227488010	**MSN175**
MF 145	Tutte		01/1969 →	◎	2,2	12	063227470010	**MSN184**
MF 145	Tutte		01/1969 →	◎	2,2	12	063227488010	**MSN175**
MF 145	Tutte		01/1966 → 01/1976		2,8	12	063227593010	**MSN540**
MF 145/145 S	Tutte		→		2,5	12	063207145010	**MSN874**
MF 148	Tutte		01/1971 → 01/1979		2,8	12	063227593010	**MSN540**
MF 148	Tutte	Perkins AD3.152	01/1973 →	◎	2,2	12	063227470010	**MSN184**
MF 148	Tutte	Perkins AD3.152	01/1973 →	◎	2,2	12	063227488010	**MSN175**
MF 148/152/ 152S/152V	Tutte		01/1971 →		2,5	12	063207145010	**MSN874**
MF 152	Tutte		01/1971 →	◎	2,2	12	063227470010	**MSN184**
MF 152	Tutte		01/1971 →	◎	2,2	12	063227488010	**MSN175**
MF 152	Tutte		01/1977 → 01/1989		2,8	12	063227593010	**MSN540**
MF 152 - Vineyard	Tutte		01/1977 → 01/1989		2,8	12	063227593010	**MSN540**
MF 154	Tutte		01/1971 →	◎	2,2	12	063227470010	**MSN184**
MF 154	Tutte		01/1971 →	◎	2,2	12	063227488010	**MSN175**
MF 154 - C Crawler	Tutte		01/1971 →	◎	2,2	12	063227470010	**MSN184**
MF 154 - C Crawler	Tutte		01/1971 →	◎	2,2	12	063227488010	**MSN175**
MF 154/154C/ 154C Crawler	Tutte		01/1971 →		2,5	12	063207145010	**MSN874**
MF 155 - 3	Tutte		01/1981 →		2,8	12	063227593010	**MSN540**
MF 155/158/165/ 174/174 AC	Tutte		01/1971 →		2,5	12	063207145010	**MSN874**
MF 158 - F/S Vineyard -	Tutte		01/1981 →		2,8	12	063227593010	**MSN540**
MF 165	Tutte		→		2,8	12	063227599010	**MSN541**

					kW	V	LONG	SHORT
MASSEY FERGUSON								
MF 165 - 3	Tutte		01/1969 → 01/1976		2,8	12	063227593010	**MSN540**
MF 168/168 F	Tutte		→		2,8	12	063227599010	**MSN541**
MF 178	Tutte	Perkins A4.248	→		2,8	12	063227602010	**MSN199**
MF 178.8	Tutte		→		2,8	12	063227599010	**MSN541**
MF 184/194/230/ 233/234 C	Tutte		01/1971 →		2,5	12	063207145010	**MSN874**
MF 185	Tutte		→		2,8	12	063227599010	**MSN541**
MF 186	Tutte		→		2,8	12	063227599010	**MSN541**
MF 186	Tutte		01/1969 → 01/1971		2,8	12	063227602010	**MSN199**
MF 186-487-TX45	Tutte		01/1969 → 12/1974		2,8	12	063227599010	**MSN541**
MF 188	Tutte		→		2,8	12	063227599010	**MSN541**
MF 20 - B	Tutte	Perkins AD3.152	01/1970 → 01/1981		2,2	12	063227470010	**MSN184**
MF 20 - B	Tutte	Perkins AD3.152	01/1970 → 01/1981		2,2	12	063227488010	**MSN175**
MF 20 - E	Tutte	Perkins AD3.152	01/1982 →		2,2	12	063227470010	**MSN184**
MF 20 - E	Tutte	Perkins AD3.152	01/1982 →		2,2	12	063227488010	**MSN175**
MF 201/205	Tutte		01/1972 → 12/1978		2,8	12	063227599010	**MSN541**
MF 206-307-1104-9500	Tutte		01/1973 →		2,8	12	063227599010	**MSN541**
MF 207	Tutte		01/1972 → 12/1997		2,8	12	063227602010	**MSN199**
MF 20B/E	Tutte		01/1989 → 04/1991		2,5	12	063207145010	**MSN874**
MF 20E	Tutte		01/1982 →		2,8	12	063227593010	**MSN540**
MF 2203	Tutte		01/1969 →		2,2	12	063227470010	**MSN184**
MF 2203	Tutte		01/1969 →		2,2	12	063227488010	**MSN175**
MF 2205	Tutte		01/1969 →		2,2	12	063227470010	**MSN184**
MF 2205	Tutte		01/1969 →		2,2	12	063227488010	**MSN175**
MF 230	Tutte	Perkins AD3.152	01/1983 →		2,2	12	063227470010	**MSN184**
MF 230	Tutte	Perkins AD3.152	01/1983 →		2,2	12	063227488010	**MSN175**
MF 230	Tutte		01/1973 →		2,8	12	063227593010	**MSN540**
MF 230	Tutte	Perkins AD3.152	01/1977 →		2,8	12	063227593010	**MSN540**
MF 235	Tutte		01/1977 →		2,2	12	063227470010	**MSN184**
MF 235	Tutte		01/1977 →		2,2	12	063227488010	**MSN175**
MF 235	Tutte		01/1977 →		2,8	12	063227593010	**MSN540**
MF 235/240	Tutte		01/1971 →		2,5	12	063207145010	**MSN874**

					kW	V	LONG	SHORT
MASSEY FERGUSON								
MF 240	Tutte	Perkins A4.236	01/1977 →		2,2	12	063227470010	**MSN184**
MF 240	Tutte	Perkins A4.236	01/1977 →		2,2	12	063227488010	**MSN175**
MF 240 - 3	Tutte		01/1977 →		2,8	12	063227593010	**MSN540**
MF 245	Tutte		01/1976 →		2,2	12	063227470010	**MSN184**
MF 245	Tutte		01/1979 → 12/1988		2,2	12	063227470010	**MSN184**
MF 245	Tutte		01/1979 → 12/1988		2,2	12	063227488010	**MSN175**
MF 245	Tutte		01/1976 →		2,2	12	063227488010	**MSN175**
MF 245	Tutte		01/1979 → 12/1988		2,8	12	063227593010	**MSN540**
MF 245/250/253/254	Tutte		01/1976 →		2,5	12	063207145010	**MSN874**
MF 250	Tutte	Perkins AD3.152	01/1982 →		2,2	12	063227470010	**MSN184**
MF 250	Tutte	Perkins AD3.152	01/1982 →		2,2	12	063227488010	**MSN175**
MF 250 - 3	Tutte		01/1977 →		2,8	12	063227593010	**MSN540**
MF 255	Tutte	Perkins AD3.152	01/1977 → 12/1988		2,2	12	063227470010	**MSN184**
MF 255	Tutte	Perkins AD3.152	01/1977 → 12/1988		2,2	12	063227488010	**MSN175**
MF 255 - 3	Tutte		01/1973 → 01/1976		2,8	12	063227593010	**MSN540**
MF 255/263T/ 264ST/264T	Tutte		01/1977 →		2,5	12	063207145010	**MSN874**
MF 265	Tutte		→		2,8	12	063227599010	**MSN541**
MF 275	Tutte		→		2,8	12	063227599010	**MSN541**
MF 285	Tutte		→		2,8	12	063227599010	**MSN541**
MF 285 - E480	Tutte		01/1976 →		2,8	12	063227602010	**MSN199**
MF 285/E480	Tutte		01/1976 →		2,8	12	063227599010	**MSN541**
MF 290	Tutte		→		2,8	12	063227599010	**MSN541**
MF 298	Tutte		01/1983 →		2,8	12	063227599010	**MSN541**
MF 30	Tutte		→		2,8	12	063227599010	**MSN541**
MF 30	Tutte		01/1982 →		2,8	12	063227602010	**MSN199**
MF 300 - Series	Tutte		→		2,8	12	063227599010	**MSN541**
MF 3050	Tutte		01/1988 →		2,8	12	063227599010	**MSN541**
MF 3060	Tutte		01/1988 →		2,8	12	063227599010	**MSN541**
MF 3060	Tutte	Perkins A4.248	01/1988 →		2,8	12	063227602010	**MSN199**
MF 3065	Tutte		01/1988 →		2,8	12	063227599010	**MSN541**
MF 3065	Tutte	Perkins AT4.236	01/1988 →		2,8	12	063227602010	**MSN199**
MF 3070	Tutte		01/1988 →		2,8	12	063227599010	**MSN541**
MF 3070	Tutte	Perkins AT4.236	01/1988 →		2,8	12	063227602010	**MSN199**
MF 30D/50D	Tutte		01/1982 →		2,8	12	063227599010	**MSN541**

					kW	V	LONG	SHORT
MASSEY FERGUSON								
MF 3145	Tutte		→		2,2	12	063227486010	**MSN180**
MF 3145	Tutte		→		2,8	12	063227592010	**MSN203**
MF 35	Tutte		01/1986 →		2,8	12	063227593010	**MSN540**
MF 350	Tutte		01/1986 →		2,8	12	063227593010	**MSN540**
MF 350/355/ 360/364 S	Tutte		01/1977 →		2,5	12	063207145010	**MSN874**
MF 354 - S/V/F	Tutte	Perkins-A3.152	→		2,2	12	063227470010	**MSN184**
MF 354 - S/V/F	Tutte	Perkins-A3.152	→		2,2	12	063227488010	**MSN175**
MF 360	Tutte		01/1986 →		2,8	12	063227593010	**MSN540**
MF 364 - S/V/F	Tutte	Perkins-AT3.152	→		2,2	12	063227470010	**MSN184**
MF 364 - S/V/F	Tutte	Perkins-AT3.152	→		2,2	12	063227488010	**MSN175**
MF 365	Tutte		→		2,8	12	063227599010	**MSN541**
MF 3680	Tutte		06/1988 →		2,2	12	063227486010	**MSN180**
MF 3680	Tutte		06/1988 →		2,8	12	063227592010	**MSN203**
MF 374 - S/V/F	Tutte	Perkins-A4.236	→		2,8	12	063227602010	**MSN199**
MF 375	Tutte		01/1983 →		2,8	12	063227599010	**MSN541**
MF 384 - S/F	Tutte	Perkins-A4.236	→		2,8	12	063227602010	**MSN199**
MF 390 T	Tutte		→		2,8	12	063227599010	**MSN541**
MF 394 - S/F	Tutte	Perkins-A4.248	→		2,8	12	063227602010	**MSN199**
MF 398	Tutte		01/1983 →		2,8	12	063227599010	**MSN541**
MF 399	Tutte		01/1983 →		2,8	12	063227599010	**MSN541**
MF 40	Tutte	Perkins AD3.152	01/1970 →		2,2	12	063227470010	**MSN184**
MF 40	Tutte	Perkins AD3.152	01/1970 →		2,2	12	063227488010	**MSN175**
MF 40 / MF 81	Tutte		→		2,5	12	063207145010	**MSN874**
MF 40.3	Tutte		01/1969 →		2,8	12	063227593010	**MSN540**
MF 4500 - Series	Tutte	Perkins AD3.152	01/1973 →		2,2	12	063227470010	**MSN184**
MF 4500 - Series	Tutte	Perkins AD3.152	01/1973 →		2,2	12	063227488010	**MSN175**
MF 50	Tutte	Perkins A4.236	01/1984 →		2,8	12	063227602010	**MSN199**
MF 50 - 10TD	Tutte	Perkins A4.236/A4.318	01/1984 → 02/1985		2,8	12	063227602010	**MSN199**
MF 50 - 10TD/9TD	Tutte	Perkins A4.236/A4.212	01/1981 → 01/1984		2,8	12	063227602010	**MSN199**
MF 50 - 9TD	Tutte	Perkins A4.236	01/1984 →		2,8	12	063227602010	**MSN199**
MF 506/520/525/ 620/625	Tutte		01/1971 →		2,8	12	063227599010	**MSN541**
MF 50B	Tutte		01/1977 → 12/1982		2,8	12	063227599010	**MSN541**
MF 50B II	Tutte		01/1981 → 12/1984		2,8	12	063227599010	**MSN541**
MF 50B II-D	Tutte		→		2,8	12	063227599010	**MSN541**
MF 50D	Tutte		01/1982 → 12/1985		2,8	12	063227599010	**MSN541**

					kW	V	LONG	SHORT
MASSEY FERGUSON								
MF 50E/50H/50HX	Tutte		01/1984 →		2,8	12	063227599010	**MSN541**
MF 510	Tutte		01/1969 → 12/1997		2,8	12	063227602010	**MSN199**
MF 550	Tutte	Perkins AD3.152	01/1976 → 01/1982		2,2	12	063227470010	**MSN184**
MF 550	Tutte	Perkins AD3.152	01/1976 → 01/1982		2,2	12	063227488010	**MSN175**
MF 550.3	Tutte		01/1974 →		2,8	12	063227593010	**MSN540**
MF 550/2203/ 2205/4500	Tutte		01/1969 →		2,5	12	063207145010	**MSN874**
MF 5500 - Series	Tutte	Perkins AD3.152	01/1973 →		2,2	12	063227470010	**MSN184**
MF 5500 - Series	Tutte	Perkins AD3.152	01/1973 →		2,2	12	063227488010	**MSN175**
MF 560.3	Tutte		01/1972 → 01/1982		2,8	12	063227593010	**MSN540**
MF 560.6	Tutte		01/1976 →		2,8	12	063227593010	**MSN540**
MF 565	Tutte		→		2,8	12	063227599010	**MSN541**
MF 575	Tutte		→		2,8	12	063227599010	**MSN541**
MF 590	Tutte		→		2,8	12	063227599010	**MSN541**
MF 592	Tutte		→		2,8	12	063227599010	**MSN541**
MF 592	Tutte	Perkins A4.318	01/1972 → 01/1982		2,8	12	063227602010	**MSN199**
MF 595	Tutte		→		2,8	12	063227599010	**MSN541**
MF 595	Tutte	Perkins A4.318	01/1972 → 01/1982		2,8	12	063227602010	**MSN199**
MF 6000 - Series	Tutte	Perkins AD4.203	01/1969 → 01/1973		2,2	12	063227470010	**MSN184**
MF 6000 - Series	Tutte	Perkins AD4.203	01/1969 → 01/1973		2,2	12	063227488010	**MSN175**
MF 6150	Tutte	1004-4THR	01/1992 →		2,8	12	063227602010	**MSN199**
MF 6160	Tutte	1006-6	01/1995 → 01/1997		2,2	12	063227486010	**MSN180**
MF 6160	Tutte	1006-6	01/1995 → 01/1997		2,8	12	063227592010	**MSN203**
MF 6160	Tutte	1006-6	01/1995 → 01/1997		2,8	12	063227602010	**MSN199**
MF 6170	Tutte	1006-6	01/1996 →		2,2	12	063227486010	**MSN180**
MF 6170	Tutte	1006-6	01/1996 →		2,8	12	063227592010	**MSN203**
MF 6180	Tutte	1006-6T	01/1996 →		2,2	12	063227486010	**MSN180**
MF 6180	Tutte	1006-6T	01/1996 →		2,8	12	063227592010	**MSN203**
MF 620	Tutte		→		2,8	12	063227599010	**MSN541**
MF 620	Tutte	Perkins A6.372	01/1971 →		2,8	12	063227602010	**MSN199**
MF 625	Tutte		→		2,8	12	063227599010	**MSN541**
MF 625	Tutte	Perkins A6.372	01/1971 →		2,8	12	063227602010	**MSN199**
MF 675	Tutte		01/1982 →		2,8	12	063227599010	**MSN541**
MF 675 - 9TD/10TD	Tutte	Perkins A4.236	01/1982 →		2,8	12	063227602010	**MSN199**
MF 685	Tutte		01/1971 →		2,8	12	063227599010	**MSN541**

					kW	V	LONG	SHORT
MASSEY FERGUSON								
MF 685	Tutte		01/1971 →		2,8	12	063227602010	**MSN199**
MF 690	Tutte		01/1982 →		2,8	12	063227599010	**MSN541**
MF 690 - 9TD/10TD	Tutte	Perkins A4.248	01/1982 →		2,8	12	063227602010	**MSN199**
MF 698	Tutte		→		2,8	12	063227599010	**MSN541**
MF 699	Tutte		→		2,8	12	063227599010	**MSN541**
MF 81	Tutte		01/1969 →		2,2	12	063227470010	**MSN184**
MF 81	Tutte		01/1969 →		2,2	12	063227488010	**MSN175**
MF 8110	Tutte	1006-6T	→		2,2	12	063227486010	**MSN180**
MF 8110	Tutte	1006-6T	→		2,8	12	063227592010	**MSN203**
MF 8120	Tutte	1006-6T	→		2,2	12	063227486010	**MSN180**
MF 8120	Tutte	1006-6T	→		2,8	12	063227592010	**MSN203**
MF 8130	Tutte	1006-6T	→		2,2	12	063227486010	**MSN180**
MF 8130	Tutte	1006-6T	→		2,8	12	063227592010	**MSN203**
MF 8240	Tutte		→		2,2	12	063227486010	**MSN180**
MF 8240	Tutte		→		2,8	12	063227592010	**MSN203**
MF 8250	Tutte	634DWE	→		2,2	12	063227486010	**MSN180**
MF 8250	Tutte	634DWE	→		2,8	12	063227592010	**MSN203**
MF 8260	Tutte	D634SBIE	→		2,2	12	063227486010	**MSN180**
MF 8260	Tutte	D634SBIE	→		2,8	12	063227592010	**MSN203**
MF 8270	Tutte	Sisu 645DSBIE	01/1999 →		2,2	12	063227486010	**MSN180**
MF 8270	Tutte	Sisu 645DSBIE	01/1999 →		2,8	12	063227592010	**MSN203**
MF 8280	Tutte	645.142DSBIE	→		2,2	12	063227486010	**MSN180**
MF 8280	Tutte	645.142DSBIE	→		2,8	12	063227592010	**MSN203**
MF 9500 Series	Tutte		→		2,8	12	063227599010	**MSN541**
MF 9500 Series	Tutte	Perkins A6.354	01/1973 →		2,8	12	063227602010	**MSN199**
MATBRO								
Dwing Lift Container	WT		→		2,8	12	063227569010	**MSN202**
Heavy Duty Fork	Y300	Lift	→		2,8	12	063227569010	**MSN202**
Swing Lift	200		→		2,8	12	063227569010	**MSN202**
Swing Lift	220		→		2,8	12	063227569010	**MSN202**
Swing Lift	240		→		2,8	12	063227569010	**MSN202**
Swing Lift	260		→		2,8	12	063227569010	**MSN202**
Swing Lift	S80		→		2,8	12	063227569010	**MSN202**
Yard Fork Lift	100		→		2,8	12	063227569010	**MSN202**
Yard Fork Lift	120		→		2,8	12	063227569010	**MSN202**
Yard Fork Lift	150		→		2,8	12	063227569010	**MSN202**
Yard Fork Lift	80		→		2,8	12	063227569010	**MSN202**
Yard Fork Lift	Y60		→		2,8	12	063227569010	**MSN202**

					kW	V	LONG	SHORT
MOSA								
Gruppo Elettrogeno	GE - 5000	RF81	03/1983 → 09/1986		1,1	12	063521070240	**MSN2010**
Gruppo Elettrogeno	GE - 5000D	RF80	10/1986 →		1,1	12	063521070240	**MSN2010**
Gruppo Elettrogeno	GE - 5000DS	6LD400	10/1986 →		1,1	12	063521070240	**MSN2010**
Gruppo Elettrogeno	GE - 7000	RF140	01/1986 →		1,1	12	063521070240	**MSN2010**
MOTOSALDA-TRICE	MS - 220	RD920	06/1971 → 06/1981		1,1	12	063521070240	**MSN2010**
MOTOSALDA-TRICE	MS - 220	RF140	02/1995 →		1,1	12	063521070240	**MSN2010**
MOTOSALDA-TRICE	MSG - 180D	RF 80	12/1982 → 12/1986		1,1	12	063521070240	**MSN2010**
MOTOSALDA-TRICE	TS - 180D	RF80	01/1986 →		1,1	12	063521070240	**MSN2010**
MOTOSALDA-TRICE	TS - 180DE	RF80	10/1987 →		1,1	12	063521070240	**MSN2010**
MOTOSALDA-TRICE	TS - 250S	RD180	12/1988 →		1,1	12	063521070240	**MSN2010**
MOTOR IBERICA								
MF 185	Tutte		01/1975 → 01/1978		2,8	12	063227602010	**MSN199**
MUIRHILL								
Tractor WD - M-H121	Tutte		→		2,8	12	063227569010	**MSN202**
MUZZI								
GENERATORE	MD - 100	Same-1056P	10/1981 → 12/1981		3,5	12	063216884010	**MSN878**
GENERATORE	MD - 20	Same-1052LP	06/1979 →		3,5	12	063216884010	**MSN878**
GENERATORE	MD - 33	Same-1053P	06/1979 → 12/1988		3,5	12	063216884010	**MSN878**
GENERATORE	MD - 45	Same-1054P	06/1979 → 12/1988		3,5	12	063216884010	**MSN878**
GENERATORE	MD - 55	Same-1055P	06/1979 → 12/1988		3,5	12	063216884010	**MSN878**
GENERATORE	MD - 65	Same-1056P	06/1979 → 12/1988		3,5	12	063216884010	**MSN878**
GENERATORE	MD - 65	Same-1056PT	03/1982 → 12/1982		3,5	12	063216884010	**MSN878**
GENERATORE	MDS - 100	Same-1056PT	03/1982 →		3,5	12	063216884010	**MSN878**
GENERATORE	MDS - 110	Same-1056PTI	12/1986 →		3,5	12	063216884010	**MSN878**
GENERATORE	MDS - 44	Same-1000.4A	01/1989 →		3,5	12	063216884010	**MSN878**
GENERATORE	MDS - 54	Same-1000.4AT	01/1989 →		3,5	12	063216884010	**MSN878**
GENERATORE	MDS - 90	Same-1056PS	01/1989 →		3,5	12	063216884010	**MSN878**
GENERATORE	MDV - 35	Same-1005A	01/1988 →		3,5	12	063216884010	**MSN878**
MWM								
D208 - 2	Tutte		01/1965 → 12/1973		3,5	12	063296843010	**MSN887**
D208 - 2	Tutte		01/1965 → 12/1973		2,4	12	063523620760	**MSN2051**
D208 - 3	Tutte		01/1965 → 12/1973		3,5	12	063296843010	**MSN887**
D208 - 3	Tutte		01/1965 → 12/1973		2,4	12	063523620760	**MSN2051**
D208 - 4	Tutte		01/1965 → 12/1973		3,5	12	063296843010	**MSN887**
D208 - 4	Tutte		01/1965 → 12/1973		2,4	12	063523620760	**MSN2051**
D225 - 2	Tutte		04/1967 → 12/1975		3,5	12	063296843010	**MSN887**
D225 - 2	Tutte		04/1967 → 12/1975		2,4	12	063523620760	**MSN2051**
D225 - 3	Tutte		04/1967 → 12/1979		3,5	12	063296843010	**MSN887**

					kW	V	LONG	SHORT
MWM								
D225 - 3	Tutte		04/1967 → 12/1979		2,4	12	063523620760	**MSN2051**
D226 - 2	Tutte		01/1972 →		3,5	12	063296843010	**MSN887**
D226 - 2	Tutte		01/1972 →		2,4	12	063523620760	**MSN2051**
D226 - 3	Tutte		01/1972 →		3,5	12	063296843010	**MSN887**
D226 - 3	Tutte		01/1972 →		2,4	12	063523620760	**MSN2051**
D308 - 2	Tutte		01/1965 → 12/1973		3,5	12	063296843010	**MSN887**
D308 - 2	Tutte		01/1965 → 12/1973		2,4	12	063523620760	**MSN2051**
D308 - 3	Tutte		01/1965 → 12/1973		3,5	12	063296843010	**MSN887**
D308 - 3	Tutte		01/1965 → 12/1973		2,4	12	063523620760	**MSN2051**
D308 - 4	Tutte		01/1965 → 12/1973		3,5	12	063296843010	**MSN887**
D308 - 4	Tutte		01/1965 → 12/1973		2,4	12	063523620760	**MSN2051**
D325 - 2	Tutte		04/1967 → 12/1978		3,5	12	063296843010	**MSN887**
D325 - 2	Tutte		04/1967 → 12/1978		2,4	12	063523620760	**MSN2051**
D325 - 3	Tutte		04/1967 → 12/1978		3,5	12	063296843010	**MSN887**
D325 - 3	Tutte		04/1967 → 12/1979		3,5	12	063296843010	**MSN887**
D325 - 3	Tutte		04/1967 → 12/1978		2,4	12	063523620760	**MSN2051**
D325 - 3	Tutte		04/1967 → 12/1979		2,4	12	063523620760	**MSN2051**
D327 - 2	Tutte		01/1972 →		3,5	12	063296843010	**MSN887**
D327 - 2	Tutte		01/1972 →		2,4	12	063523620760	**MSN2051**
D327 - 3	Tutte		01/1972 →		3,5	12	063296843010	**MSN887**
D327 - 3	Tutte		01/1972 →		2,4	12	063523620760	**MSN2051**
TD208 - 4	Tutte		02/1966 → 12/1973		3,5	12	063296843010	**MSN887**
TD208 - 4	Tutte		02/1966 → 12/1973		2,4	12	063523620760	**MSN2051**
NEW HOLLAND								
100.90	Tutte		08/1988 →		3,5	12	063216896010	**MSN224**
100.90	Tutte		08/1988 →		3,0	12	063522300090	**MSN2040**
110.90	Tutte		08/1988 →		3,5	12	063216896010	**MSN224**
110.90	Tutte		08/1988 →		3,0	12	063522300090	**MSN2040**
115.90	Tutte		08/1988 → 10/1990		3,5	12	063216896010	**MSN224**
115.90	Tutte		08/1988 → 10/1990		3,0	12	063522300090	**MSN2040**
130.90	Tutte		08/1988 → 10/1990		3,5	12	063216896010	**MSN224**
130.90	Tutte		08/1988 → 10/1990		3,0	12	063522300090	**MSN2040**
1310 Compact 3-58 Shibaura	Tutte		01/1983 → 01/1986		1,2	12	063521070780	**MSN2016**
140.90	Tutte		08/1988 →		3,5	12	063216896010	**MSN224**
140.90	Tutte		08/1988 →		3,0	12	063522300090	**MSN2040**
1510 Compact 3-58 Shibaura	Tutte		01/1983 → 01/1986		1,2	12	063521070780	**MSN2016**
160.90	Tutte		08/1988 →		3,5	12	063216896010	**MSN224**
160.90	Tutte		08/1988 →		3,0	12	063522300090	**MSN2040**
180.90	Tutte		08/1988 →		3,5	12	063216896010	**MSN224**
180.90	Tutte		08/1988 →		3,0	12	063522300090	**MSN2040**
3500	Tutte	8061I05	03/1985 →		3,5	12	063216831010	**MSN219**
3550	Tutte	8061SI05	03/1985 →		3,5	12	063216831010	**MSN219**

					kW	V	LONG	SHORT
NEW HOLLAND								
3750	Tutte	8061SI25	06/1985 →		3,5	12	063216831010	**MSN219**
45 - 66 2RM DT	Tutte	8035.06.321	01/1990 →		2,5	12	063217126010	**MSN227**
45 - 66 2RM DT	Tutte	8035.06.321	01/1990 →		3,0	12	063523620390	**MSN2050**
50C / 54C / 60C (SPECIAL)	Tutte		→		2,5	12	063207159010	**MSN877**
517 - H	Tutte	8061SI35	→		3,5	12	063216831010	**MSN219**
517 - I	Tutte	8061SI35	→		3,5	12	063216831010	**MSN219**
517 - M	Tutte	8061SI35	→		3,5	12	063216831010	**MSN219**
54C / 60C (JUNIOR)	Tutte		→		2,5	12	063207159010	**MSN877**
55 - 56	Tutte	8035.06.206,306	01/1989 →		2,5	12	063217126010	**MSN227**
55 - 56	Tutte	8035.06.206,306	01/1989 →		3,0	12	063523620390	**MSN2050**
55 - 66	Tutte	8035.06.307	01/1990 →		2,5	12	063217126010	**MSN227**
55 - 66	Tutte	8035.06.307	01/1990 →		3,0	12	063523620390	**MSN2050**
55 - 66DT	Tutte	8035.06.206	09/1984 →		2,5	12	063217126010	**MSN227**
55 - 66DT	Tutte	8035.06.206	09/1984 →		3,0	12	063523620390	**MSN2050**
55 - 75	Tutte	8035.06.206,306	03/1989 →		2,5	12	063217126010	**MSN227**
55 - 75	Tutte	8035.06.206,306	03/1989 →		3,0	12	063523620390	**MSN2050**
55 - 85M/V	Tutte	8035.06.208	09/1992 →		2,5	12	063217126010	**MSN227**
55 - 85M/V	Tutte	8035.06.208	09/1992 →		3,0	12	063523620390	**MSN2050**
55 - 86F/V	Tutte	8035.06.222,223	09/1992 →		2,5	12	063217126010	**MSN227**
55 - 86F/V	Tutte	8035.06.222,223	09/1992 →		3,0	12	063523620390	**MSN2050**
55 - 88	Tutte	8035.06.216	11/1989 →		2,5	12	063217126010	**MSN227**
55 - 88	Tutte	8035.06.317	01/1990 →		2,5	12	063217126010	**MSN227**
55 - 88	Tutte	8035.06.216	11/1989 →		3,0	12	063523620390	**MSN2050**
55 - 88	Tutte	8035.06.317	01/1990 →		3,0	12	063523620390	**MSN2050**
60 - 56	Tutte	8035.05.206	01/1989 →		2,5	12	063217126010	**MSN227**
60 - 56	Tutte	8035.05.307	01/1990 →		2,5	12	063217126010	**MSN227**
60 - 56	Tutte	8035.05.206	01/1989 →		3,0	12	063523620390	**MSN2050**
60 - 56	Tutte	8035.05.307	01/1990 →		3,0	12	063523620390	**MSN2050**
60 - 66	Tutte	8035.05.307	01/1990 →		2,5	12	063217126010	**MSN227**
60 - 66	Tutte	8035.05.307	01/1990 →		3,0	12	063523620390	**MSN2050**
60 - 66DT	Tutte	8035.05.206	09/1984 →		2,5	12	063217126010	**MSN227**
60 - 66DT	Tutte	8035.05.206	09/1984 →		3,0	12	063523620390	**MSN2050**
60 - 75	Tutte	8035.05.206,306	03/1989 →		2,5	12	063217126010	**MSN227**
60 - 75	Tutte	8035.05.206,306	03/1989 →		3,0	12	063523620390	**MSN2050**
60 - 85F/V	Tutte	8035.05.208,309	09/1992 →		2,5	12	063217126010	**MSN227**
60 - 85F/V	Tutte	8035.05.208,309	09/1992 →		3,0	12	063523620390	**MSN2050**
60 - 86F/V	Tutte	8035.05.208,309	09/1992 →		2,5	12	063217126010	**MSN227**
60 - 86F/V	Tutte	8035.05.208,309	09/1992 →		3,0	12	063523620390	**MSN2050**
60 - 88	Tutte	8035.05.317	11/1989 →		2,5	12	063217126010	**MSN227**
60 - 88	Tutte	8035.05.317	11/1989 →		3,0	12	063523620390	**MSN2050**
65 - 56	Tutte	8045.06.220,321	01/1990 →		3,5	12	063216831010	**MSN219**
65 - 66	Tutte	8045.06.220,321	06/1987 →		3,5	12	063216831010	**MSN219**
65 - 88	Tutte	8045.06.319	11/1989 →		3,5	12	063216831010	**MSN219**

					kW	V	LONG	SHORT
NEW HOLLAND								
65 - 90	Tutte	8045.06.225	09/1987 →		3,5	12	063216831010	**MSN219**
66 DT Frutteto - 55	Tutte	8035.06.323	04/1985 →		2,5	12	063217126010	**MSN227**
66 DT Frutteto - 55	Tutte	8035.06.323	04/1985 →		3,0	12	063523620390	**MSN2050**
66 DT Vigneto - 45	Tutte	8035.06.220	01/1985 →		2,5	12	063217126010	**MSN227**
66 DT Vigneto - 45	Tutte	8035.06.220	01/1985 →		3,0	12	063523620390	**MSN2050**
66 DT Vigneto - 55	Tutte	8035.06.222	05/1987 →		2,5	12	063217126010	**MSN227**
66 DT Vigneto - 55	Tutte	8035.06.222	05/1987 →		3,0	12	063523620390	**MSN2050**
66 Vigneto - 55	Tutte	8035.06.222	04/1985 →		2,5	12	063217126010	**MSN227**
66 Vigneto - 55	Tutte	8035.06.222	04/1985 →		3,0	12	063523620390	**MSN2050**
70 - 56	Tutte	8045.06.307	01/1990 →		3,5	12	063216831010	**MSN219**
70 - 56	Tutte	8045.06.206	01/1990 →		3,5	12	063216831010	**MSN219**
70 - 66	Tutte	8045.06.206	09/1984 →		3,5	12	063216831010	**MSN219**
70 - 66DT/LP	Tutte	8045.06.307	01/1990 →		3,5	12	063216831010	**MSN219**
70 - 66F/DT/LP	Tutte	8045.06.208,309	01/1990 →		3,5	12	063216831010	**MSN219**
70 - 75	Tutte	8045.06.206,307	01/1990 →		3,5	12	063216831010	**MSN219**
70 - 76V	Tutte	8045.06.208	01/1990 →		3,5	12	063216831010	**MSN219**
70 - 76V	Tutte	8045.06.309	01/1990 →		3,5	12	063216831010	**MSN219**
70 - 86F/V	Tutte	8045.06.208,309	09/1992 →		3,5	12	063216831010	**MSN219**
70 - 88	Tutte	8045.06.317	11/1989 →		3,5	12	063216831010	**MSN219**
70 - 90	Tutte	8045.06.200	03/1984 →		3,5	12	063216831010	**MSN219**
80 - 88	Tutte	8045.05.216,317	11/1989 →		3,5	12	063216831010	**MSN219**
82 - 86F	Tutte	8045.05.208,309	06/1992 →		3,5	12	063216831010	**MSN219**
8830 DT	Tutte		12/1993 →		3,5	12	063216896010	**MSN224**
8830 DT	Tutte		12/1993 →		3,0	12	063522300090	**MSN2040**
90.90	Tutte		08/1988 → 12/1991		3,5	12	063216896010	**MSN224**
90.90	Tutte		08/1988 → 12/1991		3,0	12	063522300090	**MSN2040**
95.55	Tutte		08/1988 → 12/1991		3,5	12	063216896010	**MSN224**
95.55	Tutte		08/1988 → 12/1991		3,0	12	063522300090	**MSN2040**
EXCAVATORS	E215B	Iveco; F4GE9684E; 150HP	01/2007 →		4,0	24	063522630200	**MSN2118**
F 100	Tutte		09/1990 →		3,5	12	063216896010	**MSN224**
F 100	Tutte		09/1990 →		3,0	12	063522300090	**MSN2040**
F 110	Tutte		09/1990 → 02/1993		3,5	12	063216896010	**MSN224**
F 110	Tutte		09/1990 → 02/1993		3,0	12	063522300090	**MSN2040**
F 120	Tutte		09/1990 →		3,5	12	063216896010	**MSN224**
F 120	Tutte		09/1990 →		3,0	12	063522300090	**MSN2040**
F 130	Tutte		09/1990 →		3,5	12	063216896010	**MSN224**
F 130	Tutte		09/1990 →		3,0	12	063522300090	**MSN2040**
F 140	Tutte		03/1993 →		3,5	12	063216896010	**MSN224**
F 140	Tutte		03/1993 →		3,0	12	063522300090	**MSN2040**
L - 517H/I/M	Tutte	8061SI35	03/1992 →		3,5	12	063216831010	**MSN219**

					kW	V	LONG	SHORT
NEW HOLLAND								
LOADER COMPACT	CL25 Shi-baura diesel		01/1983 → 01/1986		1,2	12	063521070780	**MSN2016**
TD55D / TD65D / 55.56 / 60.56	Tutte		→		2,5	12	063207159010	**MSN877**
WHEEL LOADER	LW110B		01/2005 →		4,0	24	063522630200	**MSN2118**
WHEEL LOADER	LW130B		01/2005 →		4,0	24	063522630200	**MSN2118**
NORMET								
CONCRETE SPRAYING	SPRAYMEC - 1050WPC	TCD2013 L4 2V	→		4,0	24	063522310050	**MSN2043**
CONCRETE SPRAYING	SPRAYMEC - 6050WP	TCD2012 L4, Tier 3	→		4,0	24	063522310050	**MSN2043**
TRANSMIXER	UTIMEC - LF500	TCD2013 L4, Tier 4; 120kW	→		4,0	24	063522310050	**MSN2043**
TRANSMIXER	UTIMEC - LF600	TSC2012 L6; Tier 3; 155kW	→		4,0	24	063522310050	**MSN2043**
TRANSMIXER	UTIMEC - MF500	TCD2012 L6; Tier 3; 155kW	→		4,0	24	063522310050	**MSN2043**
ULTILIFT	6330X	TCD2012 L4, 96kW	→		4,0	24	063522310050	**MSN2043**
PALMIERI								
Gruppo Elettrogeno	1500 GN - 100	Same-1056PT	07/1991 →		3,5	12	063216884010	**MSN878**
Gruppo Elettrogeno	1500 GN - 15	Same-1052P	09/1980 → 12/1985		3,5	12	063216884010	**MSN878**
Gruppo Elettrogeno	1500 GN - 15	Same-982P	09/1980 → 01/1982		3,5	12	063216884010	**MSN878**
Gruppo Elettrogeno	1500 GN - 25	Same-983P	07/1979 → 01/1982		3,5	12	063216884010	**MSN878**
Gruppo Elettrogeno	1500 GN - 30	Same-1053P	07/1979 → 12/1985		3,5	12	063216884010	**MSN878**
Gruppo Elettrogeno	1500 GN - 40	Same-1054P	07/1979 → 12/1990		3,5	12	063216884010	**MSN878**
Gruppo Elettrogeno	1500 GN - 50	Same-1055P	07/1979 →		3,5	12	063216884010	**MSN878**
Gruppo Elettrogeno	1500 GN - 60	Same-1056P	01/1978 →		3,5	12	063216884010	**MSN878**
Gruppo Elettrogeno	1500 GN - 80	Same-1056PT	02/1985 →		3,5	12	063216884010	**MSN878**
Gruppo Elettrogeno	1500 GN - 90T	Same-1056PT	01/1980 → 12/1985		3,5	12	063216884010	**MSN878**
Gruppo Elettrogeno	1500 GN - 95	Same-1056PTI	02/1985 →		3,5	12	063216884010	**MSN878**
Gruppo Elettrogeno	1800 GN - 100T	Same-1056PT	01/1980 → 02/1985		3,5	12	063216884010	**MSN878**
Gruppo Elettrogeno	1800 GN - 101T	Same-1056PTI	02/1985 →		3,5	12	063216884010	**MSN878**
Gruppo Elettrogeno	1800 GN - 18	Same-982L	09/1980 → 01/1982		3,5	12	063216884010	**MSN878**
Gruppo Elettrogeno	1800 GN - 24	Same-1052L	09/1980 → 01/1987		3,5	12	063216884010	**MSN878**
Gruppo Elettrogeno	1800 GN - 30	Same-983P	07/1979 → 01/1982		3,5	12	063216884010	**MSN878**
Gruppo Elettrogeno	1800 GN - 36	Same-1053P	07/1979 → 12/1988		3,5	12	063216884010	**MSN878**
Gruppo Elettrogeno	1800 GN - 48	Same-1054P	07/1979 → 12/1988		3,5	12	063216884010	**MSN878**
Gruppo Elettrogeno	1800 GN - 60	Same-1055P	07/1979 → 12/1988		3,5	12	063216884010	**MSN878**
Gruppo Elettrogeno	1800 GN - 70	Same-1056P	01/1978 → 12/1990		3,5	12	063216884010	**MSN878**
Gruppo Elettrogeno	1800 GN - 90	Same-1056PT	02/1985 →		3,5	12	063216884010	**MSN878**
PERKINS								
1004-4 T	Tutte	4 cyl	→		2,2	12	063227486010	**MSN180**
1004-4 T	Tutte	4 cyl	→		2,8	12	063227592010	**MSN203**

					kW	V	LONG	SHORT
PERKINS								
102-05/103-07/103-10	Tutte	102-05 508cc 2-cyl 8.2kw / 103-07 704cc 3-cyl 13.4kw / 103-10 999cc 3-cyl 17.5kw	→		1,2	12	063521070780	**MSN2016**
3.152	3.152		01/1979 →		2,2	12	063227470010	**MSN184**
3.152	3.152		01/1979 →		2,2	12	063227488010	**MSN175**
4.203LH	Tutte		12/1997 →		2,8	12	063227602010	**MSN199**
4.440	Tutte		02/1997 → 03/1997		2,2	12	063227486010	**MSN180**
4.440	Tutte		02/1997 → 03/1997		2,8	12	063227592010	**MSN203**
403C-07	403C-07	3R 13,4kW	→		2,0	12	063521090350	**MSN2023**
403C-10	Tutte	3R 16,6kW	→		2,0	12	063521090350	**MSN2023**
403C-11	403C-11	3R 19,5kW	→		2,0	12	063521090350	**MSN2023**
403C-15	403C-15	3R 25,1kW	→		2,0	12	063521090350	**MSN2023**
404C-20	Tutte	4R 34kW	→		2,0	12	063521090350	**MSN2023**
404C-22	404C-22	4R 38kW	→		2,0	12	063521090350	**MSN2023**
404C-22T	404C-22T	4R 44,7kW	→		2,0	12	063521090350	**MSN2023**
6.660	Tutte		02/1978 → 03/1997		2,2	12	063227486010	**MSN180**
6.660	Tutte		02/1978 → 03/1997		2,8	12	063227592010	**MSN203**
A4.236	Tutte		→		2,8	12	063227602010	**MSN199**
A4.248	Tutte		→		2,8	12	063227602010	**MSN199**
A6.354.4	Tutte		→		2,8	12	063227602010	**MSN199**
AD 3.152	Tutte		→		2,2	12	063227470010	**MSN184**
AD 3.152	Tutte		→		2,2	12	063227488010	**MSN175**
AT 3.152	Tutte		→		2,2	12	063227470010	**MSN184**
AT 3.152	Tutte		→		2,2	12	063227488010	**MSN175**
AT 6.354.4	Tutte		→		2,8	12	063227602010	**MSN199**
D3.152	Tutte		12/1997 →		2,8	12	063227602010	**MSN199**
GENERIC	Tutte		→		4,0	24	063523680270	**MSN2056**
T 3.1524	Tutte		→		2,2	12	063227470010	**MSN184**
T 3.1524	Tutte		→		2,2	12	063227488010	**MSN175**
T 4.248	Tutte		→		2,8	12	063227602010	**MSN199**
T4.236	T4.236		→		2,8	12	063227602010	**MSN199**
PIAGGIO								
Diversi modelli	Tutte		→		1,6	12	063521090110	**MSN2021**
RELIANCE MERCURY								
AIRCRAFT TRACTOR	RM 150	Aircraft Towing Tung	01/1977 → 12/1980		2,2	12	063227486010	**MSN180**

					kW	V	LONG	SHORT
RELIANCE MERCURY								
AIRCRAFT TRACTOR	RM 150	Aircraft Towing Tung	01/1977 → 12/1980		2,8	12	063227592010	**MSN203**
AIRCRAFT TRACTOR	RM 40 - Shunt Tug		→		2,8	12	063227569010	**MSN202**
AIRCRAFT TRACTOR	RM 40/50/60/70		01/1977 → 12/1980		2,2	12	063227486010	**MSN180**
AIRCRAFT TRACTOR	RM 40/50/60/70		01/1977 → 12/1980		2,8	12	063227592010	**MSN203**
AIRCRAFT TRACTOR	RM 50 - Shunt Tug		→		2,8	12	063227569010	**MSN202**
AIRCRAFT TRACTOR	RM 60 - Shunt Tug		→		2,8	12	063227569010	**MSN202**
AIRCRAFT TRACTOR	RM 70 - Shunt Tug		→		2,8	12	063227569010	**MSN202**
RENAULT AGRICULTURE								
501-4	Tutte	PERKINS-D3.152	→		2,2	12	063227470010	**MSN184**
501-4	Tutte	PERKINS-D3.152	→		2,2	12	063227488010	**MSN175**
601-4	Tutte	PERKINS-D4.203	→		2,2	12	063227470010	**MSN184**
601-4	Tutte	PERKINS-D4.203	→		2,2	12	063227488010	**MSN175**
70-12 SP	Tutte	PERKINS-4.236	→		2,8	12	063227602010	**MSN199**
70-14 SP	Tutte	PERKINS-4.236	→		2,8	12	063227602010	**MSN199**
701-4F	Tutte	PERKINS-4.236	→		2,8	12	063227602010	**MSN199**
70-32 PA/PE/ PS/PX	Tutte	PERKINS-4.236	→		2,8	12	063227602010	**MSN199**
70-34 PA/PE/ PS/PX	Tutte	PERKINS-4.236	→		2,8	12	063227602010	**MSN199**
80-12 SP	Tutte	PERKINS-4.248	→		2,8	12	063227602010	**MSN199**
80-14 SP	Tutte	PERKINS-4.248	→		2,8	12	063227602010	**MSN199**
80-32 PA/PE/ PS/PX	Tutte	PERKINS-4.248	→		2,8	12	063227602010	**MSN199**
80-34 PA/PE/ PS/PX	Tutte	PERKINS-4.248	→		2,8	12	063227602010	**MSN199**
ARES 540 RX,RZ	RX,RZ	DPSG-4039T	→		3,5	12	063206834010	**MSN873**
ARES 550 RX,RZ	RX,RZ	DPSG-4039T	→		3,5	12	063206834010	**MSN873**
CERES 65	2X4/4X4	DPSG-3029D	→		3,5	12	063206834010	**MSN873**
CERES 75	2X4/4X4	DPSG-4039D	→		3,5	12	063206834010	**MSN873**
CERES 75	2X4/4X4	Perkins-4.236	→		2,8	12	063227602010	**MSN199**
CERES 75X	2X4/4X4	DPSG-4039D	→		3,5	12	063206834010	**MSN873**
CERES 75X	2X4/4X4	Perkins-4.236	→		2,8	12	063227602010	**MSN199**
CERES 85	2X4/4X4	DPSG-4045D (without air-cond.)	→		3,5	12	063206834010	**MSN873**
CERES 85X	2X4/4X4	DPSG-4045D	→		3,5	12	063206834010	**MSN873**

					kW	V	LONG	SHORT
RENAULT AGRICULTURE								
CERES 95	2X4/4X4	DPSG-4039T	→		3,5	12	063206834010	**MSN873**
CERES 95X	2X4/4X4	DPSG-4039T	→		3,5	12	063206834010	**MSN873**
CERGOS 330	Tutte	DPSG-4045D (without air-cond.)	→		3,5	12	063206834010	**MSN873**
CERGOS 340	Tutte	DPSG-4039T (without air-cond.)	→		3,5	12	063206834010	**MSN873**
CERGOS 350	Tutte	DPSG-4045T	→		3,5	12	063206834010	**MSN873**
DEERE 3100	Tutte	3029D	→		3,5	12	063206834010	**MSN873**
ERGOS 105	2X4/4X4 Hydro & Mech.	DPSG-4045T	→		3,5	12	063206834010	**MSN873**
ERGOS 85	2X4/4X4 Hydro & Mech.	DPSG-4045D (without air-cond.)	→		3,5	12	063206834010	**MSN873**
ERGOS 95	2X4/4X4 Hydro & Mech.	DPSG-4039T	→		3,5	12	063206834010	**MSN873**
RUGGERINI								
F10	Tutte	2 cyl	→		1,1	12	063521070240	**MSN2010**
MD151	Tutte		→		1,1	12	063521070580	**MSN2013**
RDK 901/2	Tutte	2 cyl	06/1979 →		1,1	12	063521070240	**MSN2010**
RDK80	Tutte		→		1,1	12	063521070240	**MSN2010**
RDM901/1	Tutte	2 cyl	→		1,1	12	063521070240	**MSN2010**
RK180	Tutte	1cyl	→		1,1	12	063521070240	**MSN2010**
RM80	Tutte		→		1,1	12	063521070240	**MSN2010**
RM81	Tutte		→		1,1	12	063521070240	**MSN2010**
SAME DEUTZ-FAHR GROUP								
1000 - 3A	Tutte		01/1987 →		3,5	12	063216884010	**MSN878**
1000 - 3AT	Tutte		04/1990 →		3,5	12	063216884010	**MSN878**
1000 - 4A	Tutte		01/1987 →		3,5	12	063216884010	**MSN878**
1000 - 4AT	Tutte		01/1987 →		3,5	12	063216884010	**MSN878**
1000 - 4ATI	Tutte		09/1990 →		3,5	12	063216884010	**MSN878**
1000 - 6A	Tutte		10/1990 →		3,5	12	063216884010	**MSN878**
1000 - 6AT	Tutte		10/1990 →		3,5	12	063216884010	**MSN878**
1000 - 6ATI	Tutte		12/1991 →		3,5	12	063216884010	**MSN878**
105 - 2LP	Tutte		09/1980 →		3,5	12	063216884010	**MSN878**
105 - 3P	Tutte		05/1978 →		3,5	12	063216884010	**MSN878**
105 - 4P	Tutte		07/1979 →		3,5	12	063216884010	**MSN878**
1054 - PT	Tutte		01/1984 →		3,5	12	063216884010	**MSN878**
1055 - P	Tutte		05/1978 →		3,5	12	063216884010	**MSN878**
1056 - P	Tutte		01/1978 →		3,5	12	063216884010	**MSN878**
1056 - PS	Tutte		01/1984 →		3,5	12	063216884010	**MSN878**
1056 - PT	Tutte		01/1980 →		3,5	12	063216884010	**MSN878**
1056 - PTI	Tutte		12/1985 →		3,5	12	063216884010	**MSN878**
75 2RM - Frutteto	Tutte	1000.3AT	05/1991 →		3,5	12	063216884010	**MSN878**
916 - 3A	Tutte		01/1984 → 01/1987		3,5	12	063216884010	**MSN878**
916 - 4A	Tutte		01/1984 → 01/1987		3,5	12	063216884010	**MSN878**

					kW	V	LONG	SHORT
SAME DEUTZ-FAHR GROUP								
982 - LP	Tutte		09/1980 → 06/1983		3,5	12	063216884010	**MSN878**
983 - P	Tutte		07/1979 → 06/1983		3,5	12	063216884010	**MSN878**
984 - P	Tutte		06/1978 → 09/1983		3,5	12	063216884010	**MSN878**
985 - P	Tutte		03/1975 → 03/1980		3,5	12	063216884010	**MSN878**
986 - P	Tutte		03/1974 → 03/1980		3,5	12	063216884010	**MSN878**
AURORA 45	Tutte	983L	10/1981 → 02/1982		3,5	12	063216884010	**MSN878**
BUFFALO 130	Tutte	1056P	01/1978 → 10/1981		3,5	12	063216884010	**MSN878**
CENTAURO 70 Export	Tutte	984P	12/1981 → 08/1982		3,5	12	063216884010	**MSN878**
CENTAURO 70 Export	Tutte	100.4P	09/1982 → 10/1987		3,5	12	063216884010	**MSN878**
CENTAURO 70 Special	Tutte	984P	12/1981 → 08/1982		3,5	12	063216884010	**MSN878**
CENTAURO 70 Special	Tutte	100.4P	09/1982 → 10/1987		3,5	12	063216884010	**MSN878**
CENTURION 75	Tutte	105.4P	11/1978 → 09/1980		3,5	12	063216884010	**MSN878**
CENTURION 75 Export	Tutte	984P	01/1981 → 01/1981		3,5	12	063216884010	**MSN878**
CENTURION 75 Export	Tutte	105.4P	01/1981 → 10/1987		3,5	12	063216884010	**MSN878**
CENTURION 75 Special	Tutte	105.4P	01/1981 → 05/1988		3,5	12	063216884010	**MSN878**
CENTURION 75 Special	Tutte	984P	01/1981 → 01/1981		3,5	12	063216884010	**MSN878**
CONDOR 55	Tutte	983P	02/1979 → 06/1982		3,5	12	063216884010	**MSN878**
CONDOR 55	Tutte	100.3P	07/1982 → 10/1987		3,5	12	063216884010	**MSN878**
CORSARO 70 - Frutteto	Tutte	984P	10/1981 → 03/1988		3,5	12	063216884010	**MSN878**
CROP - 85	Tutte	105.4P	12/1983 → 12/1989		3,5	12	063216884010	**MSN878**
DA - 986	Tutte		05/1973 → 12/1982		3,5	12	063216884010	**MSN878**
DRAGO - 120	Tutte	1056P	01/1978 → 05/1986		3,5	12	063216884010	**MSN878**
EXPLORER - 55	Tutte	916.3A	04/1983 → 05/1986		3,5	12	063216884010	**MSN878**
EXPLORER - 65	Tutte	916.4A	03/1983 → 05/1986		3,5	12	063216884010	**MSN878**
EXPLORER - 65C	Tutte	916.4A	01/1984 → 09/1986		3,5	12	063216884010	**MSN878**
EXPLORER - 75	Tutte	916.4A	02/1985 → 05/1986		3,5	12	063216884010	**MSN878**
EXPLORER - 85	Tutte	916.4TA	02/1985 → 05/1986		3,5	12	063216884010	**MSN878**
FALCON	Tutte	983L	07/1975 → 10/1987		3,5	12	063216884010	**MSN878**
GALAXY - 170	Tutte	105.6 PTI	06/1983 →		3,5	12	063216884010	**MSN878**
HERCULES - 160	Tutte	105.6PT	06/1979 → 10/1983		3,5	12	063216884010	**MSN878**
JAGUAR	Tutte	105.4P	09/1978 → 09/1980		3,5	12	063216884010	**MSN878**
JAGUAR - 100	Tutte	105.5P	03/1982 → 03/1984		3,5	12	063216884010	**MSN878**
JAGUAR - 95	Tutte	105.5P	02/1979 → 03/1982		3,5	12	063216884010	**MSN878**
LASER - 100	Tutte	105.5P	03/1984 →		3,5	12	063216884010	**MSN878**

					kW	V	LONG	SHORT
SAME DEUTZ-FAHR GROUP								
LASER - 110	Tutte	100.6P	03/1983 → 12/1987		3,5	12	063216884010	**MSN878**
LASER - 130	Tutte	105.6P	04/1983 → 12/1987		3,5	12	063216884010	**MSN878**
LASER - 150	Tutte	105.6PS	03/1983 → 12/1987		3,5	12	063216884010	**MSN878**
LASER - 90	Tutte	105.4PT	03/1984 → 12/1987		3,5	12	063216884010	**MSN878**
LEOPARD - 85	Tutte	105.4P	01/1978 → 02/1982		3,5	12	063216884010	**MSN878**
LEOPARD - 85Export	Tutte	105.4P	02/1979 → 11/1981		3,5	12	063216884010	**MSN878**
LEOPARD - 90Turbo	Tutte	105.4PT	02/1982 → 03/1984		3,5	12	063216884010	**MSN878**
LEOPARD - C	Tutte	105.4P	06/1980 → 12/1985		3,5	12	063216884010	**MSN878**
MERCURY - 85	Tutte	105.4P	01/1981 → 10/1981		3,5	12	063216884010	**MSN878**
MERCURY - 85Export	Tutte	105.4P	01/1981 → 10/1987		3,5	12	063216884010	**MSN878**
MERCURY - 85Special	Tutte	105.4P	06/1981 → 10/1987		3,5	12	063216884010	**MSN878**
MINITAURO - 60	Tutte	1053L	01/1974 → 09/1980		3,5	12	063216884010	**MSN878**
MINITAURO 60 - Frutteto	Tutte	105.3P	03/1982 → 03/1988		3,5	12	063216884010	**MSN878**
PANTHER - 90	Tutte	985P	01/1978 → 09/1980		3,5	12	063216884010	**MSN878**
PANTHER - 95	Tutte	1055P	02/1979 → 10/1981		3,5	12	063216884010	**MSN878**
RANGER - 45	Tutte	983L	02/1982 →		3,5	12	063216884010	**MSN878**
SATURNO - 80Synchro	Tutte	1054P	02/1979 → 12/1980		3,5	12	063216884010	**MSN878**
SOLAR - 60	Tutte	105.3P	06/1986 →		3,5	12	063216884010	**MSN878**
Synchro 70 - CORSARO	Tutte	984P	03/1978 → 12/1980		3,5	12	063216884010	**MSN878**
TAURUS - 60	Tutte	105.3P	11/1978 → 12/1984		3,5	12	063216884010	**MSN878**
TAURUS - C	Tutte	105.3P	06/1980 → 12/1983		3,5	12	063216884010	**MSN878**
TIGER - 100	Tutte	105.5L	01/1977 → 09/1980		3,5	12	063216884010	**MSN878**
TIGER - Six105	Tutte	986P	01/1977 → 09/1980		3,5	12	063216884010	**MSN878**
TITAN - 160DT	Tutte	1000.6WTI	05/1991 →		3,5	12	063216884010	**MSN878**
TITAN - 190DT	Tutte	1000.6WTIR	01/1992 →		3,5	12	063216884010	**MSN878**
TRANSPORTER - 85	Tutte	105.4P	01/1991 →		3,5	12	063216884010	**MSN878**
VIGNERON - 60	Tutte	105.3P	03/1978 → 02/1988		3,5	12	063216884010	**MSN878**
VIGNERON - 70	Tutte	100.4P	06/1982 → 02/1988		3,5	12	063216884010	**MSN878**
SAMPO ROSENLEW								
Combine	3.9		01/1970 → 09/1990		2,2	12	063227486010	**MSN180**
Combine	3.9		01/1970 → 09/1990		2,8	12	063227592010	**MSN203**
SANDERSON								
SB - 55/65/75	Tutte		→		2,8	12	063227569010	MSN202
SB - 554TC	Tutte		→		2,8	12	063227569010	MSN202
SB - 754	Tutte		→		2,8	12	063227569010	MSN202

					kW	V	LONG	SHORT
SANDERSON								
TELEPORTER 2	5M-26/6-22 Fram Handler		01/1987 →		2,2	12	063227486010	MSN180
TELEPORTER 2	5M-26/6-22 Fram Handler		01/1987 →		2,8	12	063227592010	MSN203
TELEPORTER 2	7-25 Fram Handler		01/1992 →		2,2	12	063227486010	MSN180
TELEPORTER 2	7-25 Fram Handler		01/1992 →		2,8	12	063227592010	MSN203
SANDVIK								
UNDER-GROUND	AXERA 5-126	BF4L2011	→		4,0	24	063522310050	MSN2043
UNDER-GROUND	ROBOLT 5-126	BF4L2011	→		4,0	24	063522310050	MSN2043
UNDER-GROUND	SOLO 5-7C/5-5V	BF4L2012	→		4,0	24	063522310050	MSN2043
STEYR								
FARM	288		→		3,5	12	063216884010	MSN878
FARM	290		→		3,5	12	063216884010	MSN878
FARM	650 - A	WD408.41	11/1975 → 06/1977		3,5	12	063216884010	MSN878
FARM	658 - A	WD408.42	03/1977 → 12/1979		3,5	12	063216884010	MSN878
FARM	760 - A	WD408.40	01/1976 → 06/1977		3,5	12	063216884010	MSN878
FARM	760 - Super	WD408.43	01/1978 → 12/1982		3,5	12	063216884010	MSN878
FARM	768 - A	WD408.43	03/1977 → 12/1979		3,5	12	063216884010	MSN878
FARM	988		→		3,5	12	063216884010	MSN878
FARM	STEYR 8033		01/1989 →		2,5	12	063207138010	MSN245
FARM	STEYR 8043		01/1989 →		2,5	12	063207138010	MSN245
FARM	STEYR 8053		01/1989 →		2,5	12	063207138010	MSN245
TRACK MARSHALL								
TM Series	TM1600	Pipelayer	01/1973 → 12/1978		2,2	12	063227486010	MSN180
TM Series	TM1600	Pipelayer	01/1973 → 12/1978		2,8	12	063227592010	MSN203
TM Series	TM1700	Pipelayer	01/1973 → 12/1978		2,2	12	063227486010	MSN180
TM Series	TM1700	Pipelayer	01/1973 → 12/1978		2,8	12	063227592010	MSN203
TM Series	TM75		01/1971 → 12/1971		2,2	12	063227486010	MSN180
TM Series	TM75		01/1971 → 12/1971		2,8	12	063227592010	MSN203
TM Series	TM85F Pipelayer		01/1973 → 12/1978		2,2	12	063227486010	MSN180
TM Series	TM85F Pipelayer		01/1973 → 12/1978		2,8	12	063227592010	MSN203
TM Series	TM90 Pipelayer		01/1973 → 12/1978		2,2	12	063227486010	MSN180
TM Series	TM90 Pipelayer		01/1973 → 12/1978		2,8	12	063227592010	MSN203

					kW	V	LONG	SHORT
URSUS								
FARM TRACTOR	4512/4514	4390/A4236	→		2,8	12	063227602010	MSN199
UTB (UNIVERSAL TRAKT. BRASOV)(ROM)								
UNIVERSAL - 350	U/DTC/DT		→		2,5	12	063217121010	MSN226
UNIVERSAL - 445	U/DT/DTC		→		2,5	12	063217121010	MSN226
UNIVERSAL - 453	DT/DTP/DTC		→		2,5	12	063217121010	MSN226
UNIVERSAL - 523	U/DTC/DTP		→		2,5	12	063217121010	MSN226
UNIVERSAL - 530	SI		→		2,5	12	063217121010	MSN226
UNIVERSAL - 533	U/DTC/DTP		→		2,5	12	063217121010	MSN226
VALPADANA								
MOTOCOLTIVATORE	VMC 130	Ruggerini-RD 81	05/1982 → 01/1992		1,1	12	063521070240	MSN2010
MOTOCOLTIVATORE	VMC 130	6LD360	03/1992 →		1,1	12	063521070240	MSN2010
MOTOCOLTIVATORE	VMC 14	3LD510	03/1992 →		1,1	12	063521070240	MSN2010
MOTOCOLTIVATORE	VMC 14	Ruggerini-RD 901	07/1970 → 01/1986		1,1	12	063521070240	MSN2010
MOTOCOLTIVATORE	VMC 150	3LD510	03/1992 →		1,1	12	063521070240	MSN2010
MOTOCOLTIVATORE	VMC 150	Ruggerini-RD 901	04/1984 → 01/1986		1,1	12	063521070240	MSN2010
VM MOTORI								
Diversi modelli	Tutte		→		2,3	12	063521093570	MSN2120
DM - 182	Tutte		09/1982 → 06/1990		1,1	12	063521070240	MSN2010
HR - 329SHTR	Tutte		01/1986 →		3,5	12	063216831010	MSN219
VOLVO								
LOADERS	L30B	BF4L1011FT	→		2,3	12	063522230160	MSN2035
WEATHERHILL								
22HB - 2 Hydraulic	Tutte		→		2,8	12	063227569010	MSN202
LOADERS	S3/1,S3/2,S3/3		→		2,8	12	063227569010	MSN202
WHITE								
FARM TRACTOR	WHITE - 2-50/2-60/2-70		01/1976 → 01/1984		2,5	12	063217126010	MSN227
FARM TRACTOR	WHITE - 2-50/2-60/2-70		01/1976 → 01/1984		3,0	12	063523620390	MSN2050

Applicazione per codice
Buyers guide
Zuordnung nach Bestellnummer
Affectations par références
Aplicación por referencia
Aplicação por código
αρμογές ανά
Zastosowanie dla kodu
Koda göre uygulama

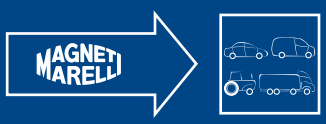




063101015010 MSN829 0,8kW 12V

FIAT	
BRAVA (182)-1.2 16V 80	12/1998 → 10/2001
BRAVO I (182)-1.2 16V 80	12/1999 → 10/2002
CINQUECENTO (170)-1.1 Sporting (170AH)	12/2000 → 10/2003
MAREA (185)-1.2 16V	12/2001 → 10/2004
MAREA Weekend (185)-1.2 16V	12/2002 → 10/2005
PUNTO (176)-55 1.1	12/2003 → 10/2006
PUNTO (176)-60 1.2	12/2004 → 10/2007
PUNTO (176)-75 1.2	12/2005 → 10/2008
PUNTO (176)-85 16V 1.2	12/2006 → 10/2009
PUNTO (188)-1.2 60 (188.030, .050, .130, .150, .230, .250)	12/2007 → 10/2010
PUNTO Cabriolet (176C)-60 1.2	12/2008 → 10/2011
PUNTO Cabriolet (176C)-85 16V 1.2	12/2009 → 10/2012
PUNTO Van (176L)-1.1	12/2010 → 10/2013
PUNTO Van (188AX)-1.2 60	12/2011 → 10/2014
SEICENTO (187)-1.1 (187AXB, 187AXB1A)	12/2012 → 10/2015
SEICENTO Van (187)-1.1 (187CXB/C)	12/2013 → 10/2016
SIENA (178_)-1.2	12/2014 → 10/2017
LANCIA	
Y (840A)-1.1 (840AE)	12/2016 → 10/2019
Y (840A)-1.2 (840AA, 840AF1A)	12/2017 → 10/2020
Y (840A)-1.2 16V (840AD)	12/2018 → 10/2021
Y10 (156)-1.1 i.e. Fire (156AG)	12/2019 → 10/2022

063101018010 MSN400 0,8kW 12V

FIAT	
PALIO (178BX)-1.2	12/2023 → 10/2026
PALIO Weekend (178DX)-1.2 (178DX.G1A)	12/2024 → 10/2027
PALIO Weekend (178DX)-1.2 (178DYA1A)	12/2025 → 10/2028
PUNTO (188)-1.2 16V 80 (188.233, .235, .253, .255, .333, .353, .639, .63	12/2026 → 10/2029
PUNTO (188)-1.2 60 (188.030, .050, .130, .150, .230, .250)	01/2002 →
PUNTO (188)-1.2 Natural Power	09/2003 →
PUNTO Van (188AX)-1.2 60	01/2002 →

063101023010 MSN410 0,8kW 12V

AUTOBIANCHI	
Y10-1.0	03/1985 → 12/1988
Y10-1.0 4WD	12/1986 → 12/1988
Y10-1.0 Cat.	01/1989 → 09/1992
Y10-1.0 Turbo	03/1985 → 12/1988
Y10-1.1	06/1989 → 09/1992
Y10-1.1 4WD	06/1989 → 09/1992
Y10-1.1 i.e. Cat.	09/1990 → 09/1992
Y10-1.3 i.e. GT	06/1989 → 09/1992




063101023010 MSN410 0,8kW 12V

FIAT	
PALIO (178BX)-1.0	04/1996 →
PANDA (141A_)-1000	09/1986 → 06/1990
PANDA (141A_)-1100	01/1993 → 08/2000
PANDA (141A_)-1000 4x4	09/1986 → 12/1992
PANDA (141A_)-1000 i.e. Cat.	07/1990 → 09/1995
PANDA (141A_)-1100 4x4	02/1995 → 09/1995
PANDA (141A_)-1100 Trekking 4x4	03/1992 → 12/1994
PANDA Van (141_)-1000	03/1989 → 06/1990
PANDA Van (141_)-1000 i.e	08/1992 → 09/1995
SEICENTO (187)-1.1 (187AXB, 187AXB1A)	01/1998 →
SEICENTO Van (187)-1.1 (187CXB/C)	01/1998 →
SIENA (178_)-1.0	09/1998 →
SIENA (178_)-1.2	09/1998 →
STRADA (178E)-1.2	06/1999 →
TIPO (160)-1.1 (160.AA)	01/1988 → 10/1991
UNO (146A/E)-1.0	09/1989 → 02/1992
UNO (146A/E)-45 1.0 (146A.ED)	10/1987 → 12/1993
UNO (146A/E)-45 i.e. 1.0	10/1987 → 03/1994
UNO (146A/E)-50 1.1	01/1990 → 12/1993
UNO (146A/E)-60 1.1	09/1989 → 09/1992
LANCIA	
Y10 (156)-1.0 Fire	07/1989 → 02/1990
Y10 (156)-1.0 Fire (156AA)	03/1985 → 06/1989
Y10 (156)-1.0 Fire (156AE) Cat.	10/1987 → 12/1990
Y10 (156)-1.0 Fire (156B, 156AD)	03/1989 → 06/1991
Y10 (156)-1.0 Fire 4WD	12/1986 → 12/1989
Y10 (156)-1.1 Avenue (156AG)	01/1995 → 12/1995
Y10 (156)-1.1 Avenue 4WD (156AG)	01/1995 → 12/1995
Y10 (156)-1.1 i.e (156AC)	08/1989 → 06/1992
Y10 (156)-1.1 i.e 4WD (156AC)	08/1989 → 06/1992
Y10 (156)-1.1 i.e. Fire (156AG)	09/1992 → 09/1995
Y10 (156)-1.1 i.e. Fire 4WD (156AG)	09/1992 → 12/1995
ROVER	
800 (XS)-820 SI (XS)	10/1988 → 10/1991
800 2 volumi /Coda spiovente (XS)-820 SI (XS)	10/1988 → 10/1991

063102003010 MSN603 0,8kW 12V

FIAT	
BRAVA (182)-1.4 (182.BG)	10/1995 → 10/1998
BRAVA (182)-1.4 12 V (182.BA)	10/1995 → 10/2001
BRAVO I (182)-1.4 (182.AA)	10/1995 → 10/2001
MAREA (185)-1.4 80 12V	09/1996 → 02/1999
MAREA Weekend (185)-1.4 80 12V	09/1996 → 02/1999

063102018010 MSN923 0,9kW 12V

FIAT	
BRAVA (182)-1.2 16V 80	12/1998 → 10/2001

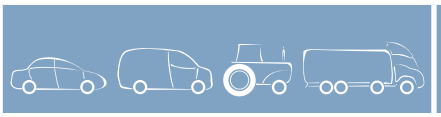


063102018010 MSN923 0,9kW 12V	
FIAT	
BRAVO I (182)-1.2 16V 80	12/1998 → 10/2001
MAREA (185)-1.2 16V	10/1998 →
MAREA Weekend (185)-1.2 16V	10/1998 →
PALIO (178BX)-1.1	08/2000 → 07/2001
PUNTO (176)-55 1.1	09/1993 → 08/1999
PUNTO (176)-60 1.2	01/1994 → 08/1999
PUNTO (176)-75 1.2	10/1993 → 08/1999
PUNTO (176)-85 16V 1.2	05/1997 → 08/1999
PUNTO (188)-1.2 16V 80 (188.233, .235, .253, .255, .333, .353, .639, .63	09/1999 →
PUNTO (188)-1.2 60 (188.030, .050, .130, .150, .230, .250)	07/2003 →
PUNTO (188)-1.2 Natural Power	09/2003 →
PUNTO Cabriolet (176C)-60 1.2	04/1994 → 08/1999
PUNTO Cabriolet (176C)-85 16V 1.2	05/1997 → 08/1999
PUNTO Van (176L)-1.1	04/1996 → 08/1999
PUNTO Van (188AX)-1.2 60	02/2000 → 06/2003
SEICENTO (187)-1.1 (187AXB, 187AXB1A)	03/1998 → 12/2003
LANCIA	
Y (840A)-1.1 (840AE)	04/1997 → 06/2000
Y (840A)-1.2 (840AA, 840AF1A)	03/1996 → 06/2000
Y (840A)-1.2 16V (840AD)	04/1997 → 09/2003
Y10 (156)-1.1 Avenue (156AG)	01/1995 → 12/1995
Y10 (156)-1.1 Avenue 4WD (156AG)	01/1995 → 12/1995
Y10 (156)-1.1 i.e. Fire (156AG)	07/1989 → 09/1995
Y10 (156)-1.1 i.e. Fire 4WD (156AG)	09/1992 → 12/1995

063102021010 MSN402 0,9kW 12V	
FIAT	
500-1.2	10/2007 →
500-1.4	10/2007 →
DOBLO (119)-1.2 (223AXA1A)	03/2001 → 12/2005
DOBLO Cargo (223)-1.2 (223ZXA1A)	03/2001 → 12/2005
PANDA (169)-1.1	09/2003 →
PUNTO / GRANDE PUNTO (199)-1.2	10/2005 →
SEICENTO (187)-1.1 (187AXB, 187AXB1A)	09/2000 →
SEICENTO Van (187)-1.1 (187CXB/C)	01/1998 → 12/2002

063102022010 MSN418 0,9kW 12V	
FIAT	
CINQUECENTO (170)-1.1 Sporting (170AH)	10/1994 → 01/1998
IDEA-1.2 16V	01/2004 →
PALIO (178BX)-1.4	04/1996 →
PANDA (169)-1.1	09/2003 →
PANDA (169)-1.2	09/2003 →
PANDA (169)-1.2 4x4	10/2004 →

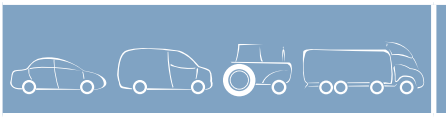


063102022010 MSN418 0,9kW 12V	
FIAT	
PANDA (169)-1.2 Bi-Power / Natural Power	06/2007 →
PANDA Van (141_)-1.2	09/2004 →
STILO (192)-1.2 16V (192_XA1B)	02/2002 →
LANCIA	
YPSILON (843)-1.2	10/2003 → 06/2006

063103022010 MSN924 1,0kW 12V	
FIAT	
BRAVA (182)-1.6 16V (182.BH)	10/1995 → 10/2001
BRAVA (182)-1.8 GT 16V (182.BC)	10/1995 → 10/2001
BRAVO I (182)-1.6 16V (182.AH)	10/1995 → 10/2001
BRAVO I (182)-1.8 GT (182.AC)	11/1996 → 10/2001
MAREA (185)-1.6 100 16V	09/1996 → 08/2000
MAREA (185)-1.6 100 16V Bipower	04/1999 →
MAREA (185)-1.8 115 16V	09/1996 → 08/2000
MAREA Weekend (185)-1.6 100 16V	09/1996 → 08/2000
MAREA Weekend (185)-1.8 115 16V	09/1996 → 08/2000
PALIO (178BX)-1.2	09/2001 →
PALIO (178BX)-1.4	04/1996 →
PALIO (178BX)-1.4 Cat.	04/1996 →
PALIO (178BX)-1.6 16V	04/1996 → 10/2002
PALIO Weekend (178DX)-1.2 (178DYA1A)	03/2001 → 10/2004
PALIO Weekend (178DX)-1.4	07/1997 → 08/2001
PALIO Weekend (178DX)-1.6	07/1997 → 10/2003
PALIO Weekend (178DX)-1.6 16V (178DX.D1A)	07/1997 → 02/2001
SIENA (178_)-1.4	07/1997 → 10/2003
SIENA (178_)-1.6	01/2002 →
SIENA (178_)-1.6 16V	09/1998 → 12/2001
TEMPRA (159)-1.4 i.e. (159.AC, 159.AX)	03/1992 → 08/1996
TEMPRA (159)-1.8 i.e. (159.AN)	03/1992 → 08/1996
TEMPRA (159)-2.0 i.e. (159.AP)	10/1990 → 06/1993
TEMPRA S.W. (159)-1.8 i.e. (159.AN)	03/1990 → 08/1996
TEMPRA S.W. (159)-2.0 i.e. (159.AP)	01/1991 → 06/1993
TEMPRA S.W. (159)-2.0 i.e. 4x4 (159.AP)	07/1992 → 03/1995
LANCIA	
DELTA II (836)-1.6 i.e. (836AP)	03/1996 → 08/1999
DELTA II (836)-1.6 i.e. 16V (836AO)	01/1996 → 08/1999
DELTA II (836)-1.8 i.e. 16V (836AQ)	03/1996 → 04/1998

063103025010 MSN927 1,0kW 12V	
FIAT	
BRAVA (182)-1.2 16V 80	12/1998 → 10/2001
BRAVO I (182)-1.2 16V 80	12/1998 → 10/2001
PALIO (178BX)-1.4	04/1996 →





063103025010 MSN927 1,0kW 12V

FIAT	
PALIO (178BX)-1.4 Cat.	04/1996 →
PALIO Weekend (178DX)-1.2 (178DX.G1A)	11/1999 → 02/2001
PALIO Weekend (178DX)-1.2 (178DYA1A)	02/2001 →
PUNTO (188)-1.2 16V 80 (188.233, .235, .253, .255, .333, .353, .639, .63	09/1999 →
PUNTO (188)-1.2 60 (188.030, .050, .130, .150, .230, .250)	09/1999 →
PUNTO (188)-1.2 Natural Power	09/2003 → 02/2005
SEICENTO (187)-1.1 (187AXB, 187AXB1A)	10/1999 →
SIENA (178_)-1.2	09/2001 →
SIENA (178_)-1.4 Cat.	04/1996 →
LANCIA	
Y (840A)-1.2 (840AA, 840AF1A)	06/2000 → 06/2003
Y (840A)-1.2 16V (840AG1A)	10/2000 → 09/2003

063111007010 MSN807 1,4kW 12V

ALFA ROMEO	
145 (930)-1.4 i.e. 16V T.S.	12/1996 → 01/2001
145 (930)-1.6 i.e. 16V T.S.	12/1996 → 01/2001
145 (930)-1.8 i.e. 16V	03/1998 → 12/2000
145 (930)-1.8 i.e. 16V T.S.	12/1996 → 12/1998
145 (930)-2.0 16V Quadrifoglio	03/1998 → 12/2000
145 (930)-2.0 16V T.S.	01/1996 → 01/2001
146 (930)-1.4 i.e. 16V T.S.	11/1996 → 01/2001
146 (930)-1.6 i.e. 16V T.S.	11/1996 → 01/2001
146 (930)-1.8 i.e. 16V T.S.	03/1998 → 01/2001
146 (930)-1.8 i.e. 16V T.S.	11/1996 → 02/1999
146 (930)-1.9 TD	12/1994 → 02/1999
146 (930)-2.0 16V Quadrifoglio	03/1998 → 12/2000
146 (930)-2.0 16V T.S.	01/1996 → 01/2001
147 (937)-1.6 16V T.SPARK (937AXB1A)	01/2001 →
147 (937)-2.0 16V T.SPARK (937AXC1_)	01/2001 → 09/2004
155 (167)-1.6 16V T.S.	05/1996 → 01/1998
155 (167)-1.7 T.S. 16V	05/1996 → 12/1997
155 (167)-1.8 T.S.	01/1996 → 12/1997
155 (167)-2.0 T.S. 16V (167.A2G)	01/1996 → 12/1997
156 (932)-1.6 16V T.SPARK (932A4)	09/1997 → 09/2005
156 (932)-1.8 16V T.SPARK (932A3)	09/1997 → 03/2003
156 (932)-2.0 16V T.SPARK (932A2)	09/1997 → 03/2002
156 (932)-2.0 JTS (932AXA)	03/2002 → 09/2005
156 Sportwagon (932)-1.6 16V T.SPARK. (932A4)	05/2000 → 03/2003
156 Sportwagon (932)-1.8 16V T.SPARK (932A3)	05/2000 → 03/2003
156 Sportwagon (932)-1.9 JTD (932B2)	05/2000 → 10/2000





063111007010 MSN807 1,4kW 12V

ALFA ROMEO	
156 Sportwagon (932)-2.0	03/2002 → 03/2003
156 Sportwagon (932)-2.0 16V T.SPARK (932A2)	05/2000 → 12/2001
156 Sportwagon (932)-2.0 JTS (932BXA)	03/2002 → 05/2006
166 (936)-2.0 T.Spark (936A3A__)	09/1998 → 04/2006
GTV (916C_)-1.8 16V (916C3)	05/1998 →
GTV (916C_)-2.0 T.SPARK 16V (916.C2__, 916C2C00)	06/1995 →
GTV (916C_)-2.0 T.SPARK 16V (916C2C)	05/1998 → 08/2000
SPIDER (916S_)-1.8 16V (916S3)	05/1998 → 02/2003
SPIDER (916S_)-2.0 T.SPARK 16V (916S2C00)	06/1995 → 04/2005
FIAT	
BARCHETTA (183)-1.8 16V	04/1995 → 04/2004
BRAVA (182)-1.8 GT 16V (182.BC)	10/1995 → 10/2001
BRAVO I (182)-1.8 GT (182.AC)	11/1996 → 10/2001
BRAVO I (182)-2.0 HGT 20V (182.AD)	11/1996 → 10/2001
COUPE (FA/175)-1.8 16V	03/1996 → 08/2000
COUPE (FA/175)-2.0 20V	08/1996 → 08/2000
COUPE (FA/175)-2.0 20V Turbo	08/1996 → 08/2000
DUNA Weekend (146 B)-DS 1.7	01/1987 → 12/1991
MAREA (185)-1.6 100 16V	09/1996 →
MAREA (185)-1.8 115 16V	09/1996 → 08/2000
MAREA (185)-2.0 150 20V	09/1996 → 04/1999
MAREA (185)-2.0 150 20V	01/2001 →
MAREA (185)-2.0 155 20V	04/1999 → 08/2000
MAREA Weekend (185)-1.6 100 16V	09/1996 →
MAREA Weekend (185)-1.8 115 16V	09/1996 → 08/2000
MAREA Weekend (185)-2.0 150 20V	09/1996 → 04/1999
MAREA Weekend (185)-2.0 150 20V	01/2001 →
MAREA Weekend (185)-2.4 JTD 130	04/1999 → 08/2000
PUNTO (188)-1.8 130 HGT (188.738, .718)	09/1999 → 06/2003
STILO (192)-1.4 16V	03/2005 →
STILO (192)-1.8 16V (192_XC1A)	10/2001 → 12/2003
STILO (192)-2.4 20V (192_XD1A)	10/2001 →
STILO Multi Wagon (192)-1.4 16V	03/2005 →
STILO Multi Wagon (192)-1.8 16V	01/2003 →
TEMPRA (159)-2.0 i.e. (159.AP)	10/1990 → 06/1993
TEMPRA S.W. (159)-1.8 i.e. (159.AN)	03/1990 → 08/1996
TEMPRA S.W. (159)-2.0 i.e. (159.AP)	01/1991 → 06/1993
TEMPRA S.W. (159)-2.0 i.e. 4x4 (159.AP)	07/1992 → 03/1995
LANCIA	
DEDRA (835)-1.8 16V LE (835FG)	03/1996 → 07/1999




063111007010 MSN807 1,4kW 12V

LANCIA	
DEDRA (835)-1.8 GT 16V (835EH)	03/1996 → 07/1999
DEDRA SW (835)-1.8 16V LE (835FG)	03/1996 → 07/1999
DEDRA SW (835)-1.8 GT 16V (835EH)	03/1996 → 07/1999
DELTA II (836)-1.6 i.e. 16V (836AO)	01/1996 → 08/1999
DELTA II (836)-1.8 i.e. 16V (836AQ)	03/1996 → 08/1999
DELTA II (836)-1.8 i.e. 16V GT (836AR)	03/1996 → 08/1999
KAPPA (838A)-2.0 20V (838AA1AA)	01/1995 → 10/2001
KAPPA (838A)-2.0 20V Turbo (838AM1AA)	06/1998 → 10/2001
KAPPA (838A)-2.4 20V (838AC1AA, 838AC11A)	01/1995 → 10/2001
KAPPA Coupe (838)-2.0 20V	03/1998 → 10/2000
KAPPA Coupe (838)-2.0 20V Turbo (838CM)	06/1998 → 10/2000
KAPPA Coupe (838)-2.4 20V (838CC)	11/1996 → 03/2001
KAPPA SW (838B)-2.0 20V (838BG1AA)	07/1996 → 10/2001
KAPPA SW (838B)-2.0 20V Turbo (838BM1AA)	06/1998 → 10/2001
KAPPA SW (838B)-2.4 20V (838BC1AA, 838BC11A)	07/1996 → 10/2001
LYBRA (839AX)-1.8 16V (839AXB1A, 839AXG1A)	07/1999 → 12/2006
LYBRA (839AX)-2.0 20V (839AXC11, 839AXC1A)	07/1999 → 07/2002
LYBRA SW (839BX)-1.8 16V (839BXB1A, 839BXG1A)	07/1999 → 12/2006
LYBRA SW (839BX)-2.0 20V (839BXC11, 839BXC1A)	07/1999 → 07/2002
THESIS (841AX)-2.0 Turbo (841AXA1B03)	07/2002 → 06/2009
THESIS (841AX)-2.4 (841AXB1B00)	07/2002 → 08/2006

063111027010 MSN806 1,8kW 12V

ALFA ROMEO	
145 (930)-1.4 i.e. 16V T.S.	01/1998 → 01/2001
146 (930)-1.4 i.e. 16V T.S.	11/1996 → 01/2001
166 (936)-2.0 T.Spark (936A3A__)	09/1998 → 10/2000
166 (936)-2.0 T.Spark (936A3B__)	10/2000 →
GTV (916C_)-2.0 T.SPARK 16V (916.C2__, 916C2C00)	01/1998 →
GTV (916C_)-2.0 T.SPARK 16V (916C2C)	05/1998 → 08/2000
SPIDER (916S_)-2.0 T.SPARK 16V (916S2C00)	01/1998 → 04/2005

063111033010 MSN405 1,4kW 12V

FIAT	
BRAVA (182)-1.6 16V (182.BB)	02/1996 → 10/2001
MAREA (185)-1.6 100 16V	01/2001 →
MAREA Weekend (185)-1.6 100 16V	01/2001 →

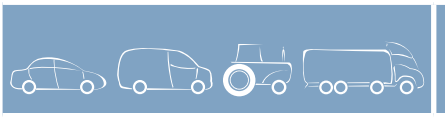


063111033010 MSN405 1,4kW 12V

FIAT	
PALIO (178BX)-1.6 16V	01/2001 →
PALIO Weekend (178DX)-1.6 16V (178DYC1A06)	02/2001 →
SIENA (178_)-1.6 16V	01/2001 →

063112003010 MSN209 1,6kW 12V

FIAT	
FIORINO Furgonato (146 Uno)-1.7 D	06/1999 → 10/1999
FIORINO Furgonato (146 Uno)-65 1.7 TD	06/1999 → 05/2001
FIORINO Pick up (146)-1.7 D	06/1999 → 10/1999
FIORINO Pick up (146)-1.7 TD	01/1997 → 05/2001
PALIO Weekend (178DX)-1.7 TD (178DX.H1A)	09/1997 → 10/2000
PUNTO (176)-1.7 D	04/1994 → 12/1996
PUNTO (176)-1.7 TD	01/1994 → 04/1997
PUNTO (176)-60 TD 1.7	09/1996 → 04/1997
PUNTO Van (176L)-1.7 D	04/1996 → 04/1997
PUNTO Van (176L)-1.7 TD	05/1997 → 08/1999
STRADA (178E)-1.7 TD	06/1999 → 03/2003

063113002010 MSN816 1,8kW 12V

ALFA ROMEO	
145 (930)-1.9 JTD	02/1999 → 01/2001
146 (930)-1.9 JTD	02/1999 → 01/2001
147 (937)-1.9 JTD	06/2003 →
147 (937)-1.9 JTD (937AXD1A)	04/2001 →
156 (932)-1.9 JTD (932B2)	09/1997 → 10/2000
156 Sportwagon (932)-1.9 JTD (932B2B__)	10/2000 → 05/2001
FIAT	
BRAVA (182)-1.9 JTD 105	12/1998 → 10/2001
BRAVA (182)-1.9 TD 100 S (182.BF)	01/1998 → 10/2001
BRAVA (182)-1.9 TD 75 S (182.BF)	01/1998 → 10/2001
BRAVO I (182)-1.9 JTD 105	12/1998 → 10/2001
BRAVO I (182)-1.9 TD 100 S (182.AF)	01/1998 → 10/2001
BRAVO I (182)-1.9 TD 75 S (182.AF)	01/1998 → 10/2001
DOBLO (119)-1.9 JTD (223AXE1A)	10/2001 →
MAREA (185)-1.9 JTD 105	04/1999 → 01/2001
MAREA (185)-1.9 JTD 110	01/2001 →
MAREA Weekend (185)-1.9 JTD 105	04/1999 →
MAREA Weekend (185)-1.9 JTD 110	01/2001 →
MULTIPLA (186)-1.9 JTD 105 (186AXB1A)	04/1999 →
MULTIPLA (186)-1.9 JTD 110	03/2001 → 07/2002
MULTIPLA (186)-1.9 JTD 115	07/2002 →
PUNTO (188)-1.9 JTD	10/2001 →




063113002010 MSN816 1,8kW 12V

FIAT	
PUNTO (188)-1.9 JTD 80 (188.237, .257, .337, .357)	09/1999 →
PUNTO Van (188AX)-1.9 JTD	02/2000 →
STILO (192)-1.9 JTD (192_XE1A)	10/2001 →
STRADA (178E)-1.9 JTD	04/2003 →
LANCIA	
LYBRA (839AX)-1.9 JTD (839AXD1A)	07/1999 → 09/2000

063113003010 MSN824 1,8kW 12V

FIAT	
DOBLO (119)-1.9 D (223AXB1A)	03/2001 → 12/2005
DOBLO Cargo (223)-1.9 D (223ZXB1A)	01/2004 → 12/2005
PALIO (178BX)-1.9 D	09/2000 →
PALIO Weekend (178DX)-1.9 D (178DYD1A07)	03/2001 →
PUNTO (188)-1.9 DS 60 (188.031, .051, .231, .251)	09/1999 → 06/2003
PUNTO Van (188AX)-1.9 D 60	02/2000 →
STRADA (178E)-1.9 D	12/2000 → 01/2006

063114014010 MSN801 2,6kW 12V

FIAT	
DUCATO Autobus (230)-2.5 TDI 4x4	04/1997 → 04/2002
DUCATO Autobus (230)-2.5 TDI Combinato	01/1997 → 04/2002
DUCATO Autobus (230)-2.5 TDI Panorama/ Combinato	01/1997 → 04/2002
DUCATO Autobus (230)-2.8 TDI	05/1998 → 09/2001
DUCATO Furgonato (230L)-2.5 TDI	01/1997 → 04/2002
DUCATO Furgonato (230L)-2.5 TDI Maxi	03/1994 → 08/1998
DUCATO Furgonato (230L)-2.8 TDI	05/1998 → 09/2001
DUCATO Pianale piatto/Telaio (230)-2.5 TDI	01/1997 → 04/2002

063187001010 MSN872 1,8kW 12V

HYUNDAI	
STAREX (H1)-2.4	02/2003 → 04/2004
STAREX (H1)-2.5 TCi	05/2004 →
STAREX (H1)-2.5 TCi	02/2003 → 04/2004

063187051010 MSN870 1,8kW 12V

FORD	
TRANSIT CONNECT (P65_, P70_, P80_)-1.8 16V	09/2002 →
TRANSIT CONNECT (P65_, P70_, P80_)-1.8 Di	09/2002 →
TRANSIT CONNECT (P65_, P70_, P80_)-1.8 TDCi	09/2002 →

063191007010 MSN800 0,8kW 12V

SMART	
CITY-COUPE (MC01)-0.6 (S1CLA1)	07/1998 → 01/2004




063193001010 MSN808 1,8kW 12V

BMW	
3 (E46)-318 d	09/2001 → 03/2003
3 (E46)-320 d	04/1998 → 09/2001
3 Compact (E46)-318 td	03/2003 → 02/2005
3 Compact (E46)-320 td	09/2001 → 02/2005
3 Touring (E46)-318 d	03/2002 → 02/2005
3 Touring (E46)-320 d	03/2000 → 09/2001
5 (E39)-520 d	02/2000 → 06/2003
5 Touring (E39)-520 d	02/2000 → 09/2003

063206834010 MSN873 3,5kW 12V

JOHN DEERE	
3029DF/TF-Tutte	→
6059DF/HF/TF-Tutte	→
Combine-MD1065	03/1994 →
Combine-MD1075	04/1987 → 02/1992
Combine-MD1075 Hydro/4	03/1994 →
FARM-1040	09/1979 → 10/1986
FARM-2150	05/1982 →
FARM-2550	05/1982 →
FARM-2750	05/1982 →
FARM-3040	05/1982 →
FARM-6100	01/1992 → 01/1996
FARM-6210	10/1998 → 01/2001
FARM-6310	01/1998 → 01/2001
FARM-6405	01/1998 → 01/2001
FARM-6410	01/1998 → 01/2001
FARM-6400-2/4	01/1992 → 01/1998
FARM-2040F/S	09/1979 → 10/1986
FARM-6110L	01/1998 → 01/2001
FARM-6200-2L	01/1992 → 01/1998
FARM-6200-4	01/1992 → 01/1998
FARM-6300-2	01/1992 → 01/1998
FARM-6300-4	01/1992 → 01/1998
FARM-6400, L	01/1992 → 01/1998
FARM-6500-2	01/1996 → 01/1998
FARM-6500-4	01/1996 → 01/1998
JD310-Tutte	03/1974 → 10/1988
JD350A-Tutte	03/1971 → 10/1988
JD400A-Tutte	01/1971 → 12/1979
JD410-Tutte	03/1974 → 10/1988
JD450A/B/C-Tutte	01/1971 → 12/1979
UTILITY-840	09/1979 → 01/1984
UTILITY-940	09/1979 → 10/1986




063206834010 MSN873 3,5kW 12V

RENAULT AGRICULTURE		
ARES 540 RX,RZ-RX,RZ	→	
ARES 550 RX,RZ-RX,RZ	→	
CERES 65-2X4/4X4	→	
CERES 75-2X4/4X4	→	
CERES 75X-2X4/4X4	→	
CERES 85-2X4/4X4	→	
CERES 85X-2X4/4X4	→	
CERES 95-2X4/4X4	→	
CERES 95X-2X4/4X4	→	
CERGOS 330-Tutte	→	
CERGOS 340-Tutte	→	
CERGOS 350-Tutte	→	
DEERE 3100-Tutte	→	
ERGOS 105-2X4/4X4 Hydro & Mech.	→	
ERGOS 85-2X4/4X4 Hydro & Mech.	→	
ERGOS 95-2X4/4X4 Hydro & Mech.	→	

063207138010 MSN245 2,5kW 12V

STEYR		
FARM-STEYR 8033	01/1989	→
FARM-STEYR 8043	01/1989	→
FARM-STEYR 8053	01/1989	→

063207145010 MSN874 2,5kW 12V

MASSEY FERGUSON		
Combine Harvester-MF 20	01/1970 →	12/1981
CRAWLER-MF 134 C - 134 C	01/1969 →	
MF 133 - Standard/Super-Tutte	01/1969 →	
MF 135-Tutte	01/1975 →	12/1978
MF 140-Tutte	01/1989 →	04/1991
MF 145/145 S-Tutte	→	
MF 148/152/152S/152V-Tutte	01/1971 →	
MF 154/154C/154C Crawler-Tutte	01/1971 →	
MF 155/158/165/174/174 AC-Tutte	01/1971 →	
MF 184/194/230/233/234 C-Tutte	01/1971 →	
MF 20B/E-Tutte	01/1989 →	04/1991
MF 235/240-Tutte	01/1971 →	
MF 245/250/253/254-Tutte	01/1976 →	
MF 255/263T/264ST/264T-Tutte	01/1977 →	
MF 350/355/360/364 S-Tutte	01/1977 →	
MF 40 / MF 81-Tutte	→	
MF 550/2203/2205/4500-Tutte	01/1969 →	

063207151010 MSN875 2,5kW 12V

PEUGEOT		
J9 Autobus-2.5 D	08/1982 →	12/1983

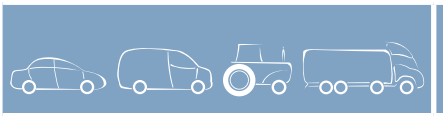


063207151010 MSN875 2,5kW 12V

PEUGEOT		
J9 Furgonato-2.1 D	10/1983 →	06/1987
J9 Furgonato-2.5 D	07/1982 →	06/1987
J9 Pianale piatto/Telaio-2.5 D	07/1982 →	12/1983

063207159010 MSN877 2,5kW 12V

NEW HOLLAND		
50C / 54C / 60C (SPECIAL)-Tutte	→	
54C / 60C (JUNIOR)-Tutte	→	
TD55D / TD65D / 55.56 / 60.56-Tutte	→	

063216731010 MSN213 4,0kW 12V

IVECO		
M-115-17	09/1983 →	12/1991
M-115-17 H	01/1986 →	12/1991
M-135-17	09/1983 →	12/1991
M-135-17 H	01/1986 →	12/1992
M-135-17 T	09/1983 →	12/1991
MK-80-16 AW	01/1986 →	12/1989
MK-90-13 A	01/1983 →	12/1991
MK-90-13 AH	01/1983 →	12/1991
Zeta-109-14	06/1983 →	03/1991
Zeta-109-14 H	06/1983 →	03/1991
Zeta-79-14	01/1983 →	11/1985
Zeta-79-14 H	01/1983 →	11/1985
Zeta-79-14 V	01/1983 →	11/1985
Zeta-95-14	07/1983 →	03/1991
Zeta-95-14 H	07/1983 →	03/1991

063216733010 MSN214 4,0kW 12V

BUSSING		
Medium Truck-OM - 20	09/1968 →	12/1972
Medium Truck-OM - 27	09/1968 →	12/1972
Medium Truck-OM - 35	09/1968 →	12/1972
Medium Truck-OM - 40	09/1968 →	12/1972
Medium Truck-OM - 45	09/1968 →	12/1972
Medium Truck-PRAFEKT - C DAL	→	→
FIAT		
130 - NC-14-Tutte	09/1972 →	12/1979
130 - NR-Tutte	09/1972 →	07/1984
130 - NT-Tutte	09/1972 →	07/1987
65 - NC-Tutte	09/1972 →	12/1979
70 - NC-Tutte	09/1972 →	12/1979
75 - NC-Tutte	09/1972 →	12/1979
FIAT ALLIS		
MOVIMENTO TERRA-S - 105B	01/1970 →	11/1976




063216733010 MSN214 4,0kW 12V	
FIAT ALLIS	
MOVIMENTO TERRA-S - 11	05/1976 → 01/1982
MOVIMENTO TERRA-S - 60	01/1970 → 11/1979
MOVIMENTO TERRA-S - 70	01/1971 → 12/1977
MOVIMENTO TERRA-S - 9	04/1976 → 01/1982
MOVIMENTO TERRA-S - 90	01/1971 → 12/1977
MOVIMENTO TERRA-SL - 11	05/1976 → 01/1982
MOVIMENTO TERRA-SL - 9	04/1976 → 01/1982
MOVIMENTO TERRA-SR - 9	03/1978 → 05/1982
IVECO	
AIFO CO-CO - 3/130l	06/971 → 12/1981
AIFO CO-CO - 3l	06/971 → 12/1981
AIFO CO-CO - 3l Var	06/971 → 12/1981
AIFO CP-CP - 3l	06/971 → 12/1981
OM	
Light Trucks-50	01/1973 → 06/1977
Light Trucks-55	01/1973 → 06/1977
Light Trucks-65	01/1973 → 06/1977
Light Trucks-70	01/1973 → 06/1977
Light Trucks-75	01/1973 → 06/1977
Light Trucks-80	01/1973 → 12/1981
Light Trucks-90	01/1973 → 12/1981
Light Trucks-130 - R/T	02/1973 → 12/1980
Light Trucks-50 - C/N/L	01/1972 → 12/1981
Light Trucks-55 - C/N	01/1972 → 12/1981
063216741010 MSN521 4,0kW 24V	
IVECO	
EuroCargo-100 E 15	01/1991 → 08/2000
EuroCargo-100 E 15 K	01/1991 → 08/2000
EuroCargo-100 E 18	01/1991 → 11/2000
EuroCargo-100 E 18 K	01/1991 → 11/2000
EuroCargo-100 E 21	01/1991 → 11/2000
EuroCargo-120 E 15	01/1991 → 07/2000
EuroCargo-120 E 15 K	01/1992 → 07/2000
EuroCargo-120 E 18	01/1992 → 07/2000
EuroCargo-120 E 18 K	01/1992 → 07/2000
EuroCargo-120 E 23	01/1992 → 08/2000
EuroCargo-130 E 15	01/1994 → 07/2000
EuroCargo-130 E 15 K	01/1994 → 07/2000
EuroCargo-130 E 18	01/1992 → 07/2000
EuroCargo-130 E 18 K	01/1992 → 07/2000
EuroCargo-130 E 23	01/1992 → 07/2000
EuroCargo-135 E 18 W	01/1997 → 07/2000
EuroCargo-135 E 18 WR	01/1994 → 12/1996
EuroCargo-135 E 23 W	01/1997 → 07/2000




063216741010 MSN521 4,0kW 24V	
IVECO	
EuroCargo-135 E 23 WR	01/1994 → 12/1996
EuroCargo-150 E 15	01/1992 → 12/1996
EuroCargo-150 E 15 K	01/1992 → 12/1996
EuroCargo-150 E 18	01/1992 → 07/2000
EuroCargo-150 E 18 K	01/1992 → 07/2000
EuroCargo-150 E 23	01/1992 → 07/2000
EuroCargo-170 E 18 K, 180 E 18 K	01/1994 → 07/2000
EuroCargo-170 E 18, 180 E 18	01/1994 → 07/2000
EuroCargo-170 E 23 K,180 E 23 K	01/1994 → 07/2000
EuroCargo-170 E 23,180 E 23	01/1994 → 07/2000
EuroCargo-180 E 21 T	04/1992 → 07/2000
EuroCargo-260 E 23	12/1991 → 07/2000
EuroCargo-260 E 23 KE	12/1991 → 07/2000
EuroCargo-260 E 23 T	01/1992 → 07/2000
EuroCargo-280 E 23	12/1991 → 11/2000
EuroCargo-280 E 23 T	01/1992 → 11/2000
EuroCargo-75 E 14	01/1991 →
EuroCargo-75 E 14 K	01/1997 →
EuroCargo-75 E 15 K	01/1991 → 12/1992
EuroCargo-75 E 15, 80 E 15	01/1991 → 12/1992
EuroCargo-80 E 15	01/1991 → 08/2000
EuroCargo-80 E 15 K	01/1991 → 08/2000
EuroCargo-80 E 18	01/1991 → 08/2000
EuroCargo-80 E 18 K	01/1991 → 08/2000
EuroCargo-80 E 21	01/1991 → 08/2000
EuroCargo-95 E 15 W	11/1993 →
EuroCargo-95 E 21 W	11/1993 → 08/2000
M-145-17	02/1986 → 12/1991
M-159-17	07/1982 → 09/1986
M-175-17	09/1986 → 12/1992
P/PA-159-17 H	07/1982 → 09/1986
Zeta-50-10	01/1979 → 10/1983
Zeta-50-10 H	01/1979 → 10/1983
Zeta-50-10 V	01/1979 → 10/1983
Zeta-50-9	01/1987 → 03/1991
Zeta-50-9 H	01/1987 → 03/1991
Zeta-50-9 V	01/1987 → 03/1991
Zeta-60-10	05/1982 → 12/1986
Zeta-60-10 H	05/1982 → 12/1986
Zeta-60-10 V	05/1982 → 12/1986
Zeta-65-10	05/1982 → 01/1987
Zeta-65-10 H	05/1982 → 01/1987
Zeta-65-10 V	05/1982 → 01/1987
Zeta-79-10	01/1983 → 01/1987

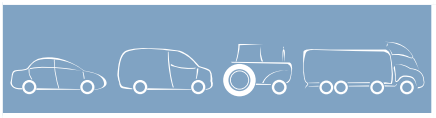


063216741010 MSN521 4,0kW 24V

IVECO	
Zeta-79-10 H	01/1983 → 01/1987
Zeta-79-10 V	01/1983 → 01/1987
Zeta-79-14	07/1988 → 03/1991
Zeta-79-14 H	07/1988 → 03/1991
Zeta-79-14 V	07/1988 → 03/1991
Zeta-A 60-10	11/1979 → 06/1988
Zeta-A 70-12	01/1983 → 01/1985
Zeta-A 70-14	05/1988 → 12/1992

063216831010 MSN219 3,5kW 12V

AGRIFULL	
SERIE 65-65	03/1985 → 12/1989
SERIE 65-65 - DT	03/1985 →
SERIE 65-65 - LM	01/1990 →
SERIE 670-Tutte	09/1980 → 12/1984
SERIE 70-70	10/1984 →
SERIE 70-70 - C	01/1990 →
SERIE 70-70 - C	03/1985 → 12/1989
SERIE 70-70 - C/L	03/1985 →
SERIE 70-A - 70LM	01/1990 →
SERIE 70-DT Frutteto	03/1985 →
SERIE 70-Frutteto	01/1990 →
SERIE 70-Frutteto	03/1985 → 12/1989
SERIE 80-80	10/1984 → 12/1989
SERIE 80-80	01/1990 →
SERIE 80-80 - 66	03/1984 → 12/1984
SERIE 80-80 - 76	03/1984 → 12/1984
SERIE 80-80 - C	01/1990 →
SERIE 80-80 - C	03/1985 → 12/1989
SERIE 80-80 - DTF	09/1986 → 12/1989
SERIE 80-80 - DTF	01/1990 →
SERIE 80-80 - F	09/1986 → 12/1989
SERIE 80-80 - F	01/1990 →
SERIE 80-80 - SERIE 70	09/1980 → 12/1984
SERIE 80-82 - 86F	06/1992 →

BENFRA	
MOVIMENTO TERRA-215	01/1979 → 06/1985
MOVIMENTO TERRA-1.45	06/1989 →
MOVIMENTO TERRA-4.11	01/1989 →
MOVIMENTO TERRA-7.07	01/1989 → 04/1991
MOVIMENTO TERRA-9.09 - CH	10/1985 → 04/1991
MOVIMENTO TERRA-9.10 - CH	02/1985 → 04/1991

FIAT	
666-Tutte	02/1982 → 12/1984

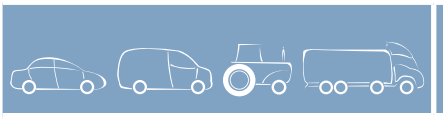


063216831010 MSN219 3,5kW 12V

FIAT	
670-Tutte	09/1980 → 04/1982
1380-Tutte	09/1980 → 12/1983
1000 - DT/DTS/S-Tutte	04/1975 → 12/1979
580 - DT-Tutte	12/1977 → 02/1984
605 - C/CS-Tutte	01/1977 → 07/1982
640 - DT-Tutte	10/1972 → 03/1982
65 - 46-Tutte	04/1985 → 12/1988
65 - 56-Tutte	01/1990 →
65 - 66-Tutte	06/1987 →
65 - 88-Tutte	11/1989 →
65 - 90-Tutte	09/1987 →
66 Vigneto - 70-Tutte	01/1990 →
665 - C-Tutte	06/1982 → 12/1984
666 - DT-Tutte	02/1982 → 12/1984
670 - DT-Tutte	07/1977 → 04/1982
680 - DT-Tutte	07/1977 → 02/1984
70 - 56-Tutte	01/1990 →
70 - 65-Tutte	10/1984 → 02/1989
70 - 66-Tutte	09/1984 →
70 - 66DT-Tutte	01/1990 →
70 - 66F/FDT/LP/DT-Tutte	01/1990 →
70 - 75-Tutte	01/1990 →
70 - 76-Tutte	01/1990 →
70 - 88-Tutte	11/1989 →
70 - 90-Tutte	03/1984 →
765 - C-Tutte	06/1982 → 12/1984
766 - DT-Tutte	02/1982 → 12/1984
780 - DT-Tutte	01/1975 → 02/1984
80 - 65-Tutte	10/1984 → 02/1989
80 - 66-2RM-Tutte	05/1987 → 12/1989
80 - 66-2RM-Tutte	01/1990 →
80 - 66-4RM-Tutte	05/1987 → 12/1989
80 - 66-4RM-Tutte	01/1990 →
80 - 66DT-Tutte	09/1984 → 12/1989
80 - 66DT-Tutte	01/1990 →
80 - 75-Tutte	03/1989 → 12/1989
80 - 75-Tutte	01/1990 →
80 - 88-Tutte	11/1989 →
80 - 90DT-Tutte	03/1984 →
85 - 55-Tutte	10/1984 → 06/1989
85 - 90-Tutte	01/1991 →
855 - C-Tutte	02/1981 → 12/1984
880 - 5-Tutte	09/1980 → 08/1982
DIM - 30-Tutte	01/1973 → 11/1981





063216831010 MSN219 3,5kW 12V	
FIAT	
DIM - 35-Tutte	01/1973 → 11/1981
FIAT OM CARRELLI ELEV	
DI - 20C-Tutte	12/1990 →
DI - 25C-Tutte	12/1990 →
DI - 25C-Tutte	01/1980 → 12/1990
DI - 30-Tutte	01/1973 → 11/1981
DI - 30C-Tutte	01/1980 → 12/1990
DI - 30C-Tutte	12/1990 →
DI - 30CH-Tutte	06/1985 → 12/1990
DI - 30CH-Tutte	12/1990 →
DI - 35-Tutte	01/1973 → 11/1981
DI - 35C-Tutte	07/1981 → 12/1990
DI - 35C-Tutte	12/1990 →
DI - 40-Tutte	01/1973 → 11/1981
DI - 40C-Tutte	12/1990 →
DI - 40C-Tutte	07/1981 → 12/1990
DI - 45C-Tutte	12/1990 →
DI - 45C-Tutte	06/1985 → 12/1990
DI - 50-Tutte	01/1973 → 07/1981
DI - 50CH-Tutte	06/1985 → 12/1990
DI - 50CH-Tutte	12/1990 →
DI - 60C-Tutte	12/1990 →
DI - 60C-Tutte	06/1985 → 12/1990
DI - 70-Tutte	01/1981 → 12/1981
DI - 70C-Tutte	12/1990 →
DI - 70C-Tutte	10/1985 → 12/1990
DI - 80C-Tutte	12/1990 →
DI - 80C-Tutte	10/1985 → 12/1990
FIATALLIS	
MOVIMENTO TERRA-545 - B	09/1981 → 12/1982
MOVIMENTO TERRA-FG - 65A	03/1984 → 01/1988
MOVIMENTO TERRA-FL - 4C	11/1970 → 07/1978
MOVIMENTO TERRA-FL - 4D	11/1970 → 07/1978
IVECO	
AIFO 8031-8031 - 4300	06/1979 → 12/1984
AIFO 8031-8031 - 5300	01/1985 → 12/1989

063216831010 MSN219 3,5kW 12V	
IVECO	
AIFO 8031-8031 - I-05.00	01/1990 →
AIFO 8041-8041 - 4200	03/1980 → 12/1980
AIFO 8041-8041 - 4300	06/1979 → 12/1984
AIFO 8041-8041 - 5260	06/1986 → 09/1988
AIFO 8041-8041 - 5300	01/1985 → 12/1989
AIFO 8041-8041 - I-05.00	01/1990 →





063216831010 MSN219 3,5kW 12V	
IVECO	
AIFO 8041-8041 - I-05.50	01/1990 →
AIFO 8041-8041 - SI-25.00	01/1990 →
AIFO 8051-8051 - 4100	01/1984 → 12/1984
AIFO 8051-8051 - 5200	01/1985 → 12/1989
AIFO 8051-8051 - I-05.00	01/1990 →
AIFO 8060-8060 - 2800	06/1973 → 10/1981
AIFO 8060-8060 - 2811	06/1973 → 12/1980
AIFO 8061-8061 - 05.300-I-25	01/1986 → 12/1989
AIFO 8061-8061 - 24000	01/1984 → 12/1985
AIFO 8061-8061 - 25000	01/1986 →
AIFO 8061-8061 - 25010	01/1985 →
AIFO 8061-8061 - 4000	06/1979 → 12/1984
AIFO 8061-8061 - 4001	01/1984 → 12/1984
AIFO 8061-8061 - 4050	06/1979 → 06/1983
AIFO 8061-8061 - 4051	09/1981 → 06/1983
AIFO 8061-8061 - 4060	06/1978 → 12/1984
AIFO 8061-8061 - 4061	09/1981 → 07/1983
AIFO 8061-8061 - 5000	01/1985 → 12/1989
AIFO 8061-8061 - 5260	06/1986 → 09/1988
AIFO 8061-8061 - 5260	01/1990 →
AIFO 8061-8061 - I-05.00	01/1990 →
AIFO 8061-8061 - I-25.00	01/1990 →
AIFO 8061-8061 - SI-35.05	12/1991 →
AIFO 8061-8061 - SRI-25.00	10/1989 →
AIFO 8065-8065 - 2000	06/1973 → 12/1980
DI - 20C/25C/30C-Tutte	02/1986 → 12/1990
LAVERDA	
3300-Tutte	01/1983 → 12/1986
3350-Tutte	01/1983 → 06/1986
3400-Tutte	05/1986 →
3450-Tutte	01/1983 → 12/1984
3500-Tutte	01/1985 →
3550-Tutte	03/1985 →
3600-Tutte	01/1983 → 06/1986
3650-Tutte	06/1985 →
3750-Tutte	06/1985 →
3300 - AL-Tutte	04/1983 →
3350 - AL-Tutte	01/1983 → 12/1986
NEW HOLLAND	
3500-Tutte	03/1985 →
3550-Tutte	03/1985 →
3750-Tutte	06/1985 →
517 - H-Tutte	→

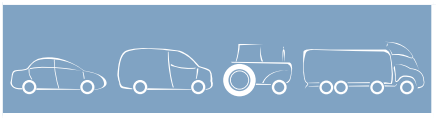


063216831010 MSN219 3,5kW 12V	
NEW HOLLAND	
517 - I-Tutte	→
517 - M-Tutte	→
65 - 56-Tutte	01/1990 →
65 - 66-Tutte	06/1987 →
65 - 88-Tutte	11/1989 →
65 - 90-Tutte	09/1987 →
70 - 56-Tutte	01/1990 →
70 - 66-Tutte	09/1984 →
70 - 66DT/LP-Tutte	01/1990 →
70 - 66F/DT/LP-Tutte	01/1990 →
70 - 75-Tutte	01/1990 →
70 - 76V-Tutte	01/1990 →
70 - 86F/V-Tutte	09/1992 →
70 - 88-Tutte	11/1989 →
70 - 90-Tutte	03/1984 →
80 - 88-Tutte	11/1989 →
82 - 86F-Tutte	06/1992 →
L - 517H/I/M-Tutte	03/1992 →
VM MOTORI	
HR - 329SHTR-Tutte	01/1986 →
063216833010 MSN220 3,5kW 12V	
FIATAGRI	
1300-DT-S-DTS-Tutte	11/1986 →
880 DT-Tutte	→
FIATALLIS	
MOVIMENTO TERRA-FL 4C-FL 4D	→
MOVIMENTO TERRA-FL 6	→
MOVIMENTO TERRA-FL 9	→
063216851010 MSN221 3,5kW 12V	
RENAULT	
MASTER I Autobus (T__)-28-35 2.4 D	09/1980 → 12/1984
MASTER I Autobus (T__)-28-35 2.5 D	08/1989 → 07/1998
MASTER I Furgonato (T__)-2.4 D	07/1983 → 12/1984
MASTER I Furgonato (T__)-2.4 D	09/1980 → 06/1983
MASTER I Furgonato (T__)-28-35 2.4 D	09/1980 → 12/1984
MASTER I Pianale piatto/Telaio (P__)-28-35 2.5 D	09/1980 → 12/1984
TRAFIC Pianale piatto/Telaio (P6)-2.5 D	03/1980 → 04/1989
RENAULT TRUCKS	
B Cassone / Furgonato / Promiscuo-70	01/1983 → 10/1985
B Pianale piatto/Telaio-70	01/1983 → 10/1985
063216884010 MSN878 3,5kW 12V	
ADIM	
1000.3 - AT/W-Tutte	→
1000.4 - AT/ATI/W/WT-Tutte	→

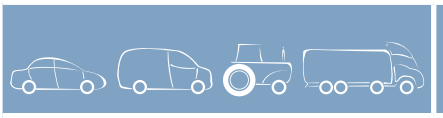


063216884010 MSN878 3,5kW 12V	
ADIM	
1000.6 - AT/ATI/W/WT/WTI/WTR-Tutte	→
1053 - P-Tutte	→
1054 - P/PT-Tutte	→
1055 - P-Tutte	→
1056 - P/PS/PT/PTI-Tutte	→
AGCO	
4660-AWD - 2WD	05/1991 →
8610-AWD - CA	05/1991 →
8630-AWD - CA	05/1991 →
HUERLIMANN	
H 345-Tutte	12/1981 → 03/1986
H 355-Tutte	01/1982 → 06/1983
H 358-Tutte	06/1986 →
H 360-Tutte	10/1979 → 06/1983
H 470-Tutte	09/1979 → 06/1983
H 476 - V-Tutte	12/1988 → 12/1991
H 480-Tutte	04/1979 → 06/1983
H 488 - T-Tutte	06/1986 →
H 490-Tutte	04/1980 → 06/1983
H 496 - T-Tutte	04/1984 → 12/1989
H 5110-Tutte	12/1980 → 06/1983
H 5110/ 5116T-Tutte	04/1984 → 12/1990
H 6130-Tutte	03/1979 → 06/1981
H 6130/ 6115-Elite	12/1989 →
H 6135-Elite	12/1989 →
H 6136-Tutte	04/1984 → 12/1990
H 6160-Tutte	03/1979 → 03/1981
H 6160/ 6165 - Master-Tutte	05/1991 →
H 6190 - Master-Tutte	01/1992 →
LAMBORGHINI (SAME DEUTZ-FAHR GROUP)	
1556-Tutte	06/1981 → 12/1984
1000 - 3W-Tutte	01/1987 →
1000 - 4W-Tutte	01/1987 →
1000 - 4WT-Tutte	01/1987 →
1000 - 6W-Tutte	12/1990 →
1000 - 6WT-Tutte	12/1990 →
1000 - 6WTI-Tutte	09/1990 →
1000 - 6WTIR-Tutte	02/1992 →
1356 - DT-Tutte	12/1980 → 12/1984
345 - F-Tutte	03/1988 →
573 - 60N-Tutte	02/1988 → 11/1990
574 - 60N-Tutte	02/1988 → 11/1990



063216884010 MSN878 3,5kW 12V

LAMBORGHINI (SAME DEUTZ-FAHR GROUP)	
654 - DT-Tutte	07/1977 → 12/1981
674 - 70-Tutte	06/1986 →
674 - 70N-Tutte	06/1986 →
684 - DT-Tutte	01/1982 → 12/1985
70N Basso - 674-Tutte	06/1986 →
754 - DT-Tutte	11/1976 → 01/1982
774 - 80-Tutte	06/1986 →
774 - 80DT-Tutte	06/1986 →
774 - 80N-Tutte	06/1986 →
775 - 80N-Tutte	06/1987 →
874 - 90-Tutte	06/1986 →
916 - 3W-Tutte	01/1984 → 01/1987
916 - 4W-Tutte	01/1984 → 01/1987
916 - 6W-Tutte	01/1987 → 03/1988
916 - 6WT-Tutte	01/1987 → 03/1988
C 684 - L/N-Tutte	04/1983 → 12/1983
C 754-Tutte	01/1980 → 12/1984
C 754.80-Tutte	06/1986 →
C 784 - L-Tutte	04/1983 → 12/1984
Formula - 115-Tutte	12/1989 →
Formula - 135-Tutte	12/1989 →
R 1056 DT-Tutte	02/1977 → 07/1979
R 613 DT-Tutte	01/1982 → 02/1988
R 653 F - 654DT-Tutte	03/1982 → 12/1985
R 684 F-Tutte	03/1982 → 12/1985
R 714 DT - 2RM-Tutte	03/1984 → 02/1988
R 724 F-Tutte	02/1982 → 04/1986
R 754-Tutte	01/1982 → 12/1985
R 854 DT - 2RM-Tutte	11/1976 → 12/1985
R 955 DT - 2RM-Tutte	06/1979 → 12/1985
Racing - 165-Tutte	05/1991 →
Racing - 190-Tutte	01/1992 →
MUZZI	
GENERATORE-MD - 100	10/1981 → 12/1981
GENERATORE-MD - 20	06/1979 →
GENERATORE-MD - 33	06/1979 → 12/1988
GENERATORE-MD - 45	06/1979 → 12/1988
GENERATORE-MD - 55	06/1979 → 12/1988
GENERATORE-MD - 65	06/1979 → 12/1988
GENERATORE-MDS - 100	03/1982 →
GENERATORE-MDS - 110	12/1986 →
GENERATORE-MDS - 44	01/1989 →
GENERATORE-MDS - 54	01/1989 →
GENERATORE-MDS - 90	01/1989 →



063216884010 MSN878 3,5kW 12V

MUZZI	
GENERATORE-MDV - 35	01/1988 →
PALMIERI	
Gruppo Elettrogeno-1500 GN - 100	07/1991 →
Gruppo Elettrogeno-1500 GN - 15	09/1980 → 12/1985
Gruppo Elettrogeno-1500 GN - 25	07/1979 → 01/1982
Gruppo Elettrogeno-1500 GN - 30	07/1979 → 12/1985
Gruppo Elettrogeno-1500 GN - 40	07/1979 → 12/1990
Gruppo Elettrogeno-1500 GN - 50	07/1979 →
Gruppo Elettrogeno-1500 GN - 60	01/1978 →
Gruppo Elettrogeno-1500 GN - 80	02/1985 →
Gruppo Elettrogeno-1500 GN - 90T	01/1980 → 12/1985
Gruppo Elettrogeno-1500 GN - 95	02/1985 →
Gruppo Elettrogeno-1800 GN - 100T	01/1980 → 02/1985
Gruppo Elettrogeno-1800 GN - 101T	02/1985 →
Gruppo Elettrogeno-1800 GN - 18	09/1980 → 01/1982
Gruppo Elettrogeno-1800 GN - 24	09/1980 → 01/1987
Gruppo Elettrogeno-1800 GN - 30	07/1979 → 01/1982
Gruppo Elettrogeno-1800 GN - 36	07/1979 → 12/1988
Gruppo Elettrogeno-1800 GN - 48	07/1979 → 12/1988
Gruppo Elettrogeno-1800 GN - 60	07/1979 → 12/1988
Gruppo Elettrogeno-1800 GN - 70	01/1978 → 12/1990
Gruppo Elettrogeno-1800 GN - 90	02/1985 →
SAME DEUTZ-FAHR GROUP	
1000 - 3A-Tutte	01/1987 →
1000 - 3AT-Tutte	04/1990 →
1000 - 4A-Tutte	01/1987 →
1000 - 4AT-Tutte	01/1987 →
1000 - 4ATI-Tutte	09/1990 →
1000 - 6A-Tutte	10/1990 →
1000 - 6AT-Tutte	10/1990 →
1000 - 6ATI-Tutte	12/1991 →
105 - 2LP-Tutte	09/1980 →
105 - 3P-Tutte	05/1978 →
105 - 4P-Tutte	07/1979 →
1054 - PT-Tutte	01/1984 →
1055 - P-Tutte	05/1978 →
1056 - P-Tutte	01/1978 →
1056 - PS-Tutte	01/1984 →
1056 - PT-Tutte	01/1980 →
1056 - PTI-Tutte	12/1985 →
75 2RM - Frutteto-Tutte	05/1991 →
916 - 3A-Tutte	01/1984 → 01/1987
916 - 4A-Tutte	01/1984 → 01/1987

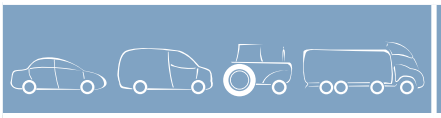


063216884010 MSN878 3,5kW 12V

SAME DEUTZ-FAHR GROUP	
982 - LP-Tutte	09/1980 → 06/1983
983 - P-Tutte	07/1979 → 06/1983
984 - P-Tutte	06/1978 → 09/1983
985 - P-Tutte	03/1975 → 03/1980
986 - P-Tutte	03/1974 → 03/1980
AURORA 45-Tutte	10/1981 → 02/1982
BUFFALO 130-Tutte	01/1978 → 10/1981
CENTAURO 70 Export-Tutte	12/1981 → 10/1987
CENTAURO 70 Special-Tutte	12/1981 → 10/1987
CENTURION 75-Tutte	11/1978 → 09/1980
CENTURION 75 Export-Tutte	01/1981 → 10/1987
CENTURION 75 Special-Tutte	01/1981 → 05/1988
CONDOR 55-Tutte	02/1979 → 10/1987
CORSARO 70 - Frutteto-Tutte	10/1981 → 03/1988
CROP - 85-Tutte	12/1983 → 12/1989
DA - 986-Tutte	05/1973 → 12/1982
DRAGO - 120-Tutte	01/1978 → 05/1986
EXPLORER - 55-Tutte	04/1983 → 05/1986
EXPLORER - 65-Tutte	03/1983 → 05/1986
EXPLORER - 65C-Tutte	01/1984 → 09/1986
EXPLORER - 75-Tutte	02/1985 → 05/1986
EXPLORER - 85-Tutte	02/1985 → 05/1986
FALCON-Tutte	07/1975 → 10/1987
GALAXY - 170-Tutte	06/1983 →
HERCULES - 160-Tutte	06/1979 → 10/1983
JAGUAR-Tutte	09/1978 → 09/1980
JAGUAR - 100-Tutte	03/1982 → 03/1984
JAGUAR - 95-Tutte	02/1979 → 03/1982
LASER - 100-Tutte	03/1984 →
LASER - 110-Tutte	03/1983 → 12/1987
LASER - 130-Tutte	04/1983 → 12/1987
LASER - 150-Tutte	03/1983 → 12/1987
LASER - 90-Tutte	03/1984 → 12/1987
LEOPARD - 85-Tutte	01/1978 → 02/1982
LEOPARD - 85Export-Tutte	02/1979 → 11/1981
LEOPARD - 90Turbo-Tutte	02/1982 → 03/1984
LEOPARD - C-Tutte	06/1980 → 12/1985
MERCURY - 85-Tutte	01/1981 → 10/1981
MERCURY - 85Export-Tutte	01/1981 → 10/1987
MERCURY - 85Special-Tutte	06/1981 → 10/1987
MINITAURO - 60-Tutte	01/1974 → 09/1980
MINITAURO 60 - Frutteto-Tutte	03/1982 → 03/1988
PANTHER - 90-Tutte	01/1978 → 09/1980
PANTHER - 95-Tutte	02/1979 → 10/1981

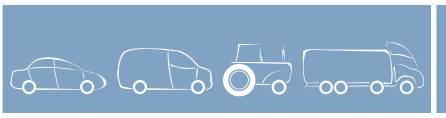


063216884010 MSN878 3,5kW 12V

SAME DEUTZ-FAHR GROUP	
RANGER - 45-Tutte	02/1982 →
SATURNO - 80Synchro-Tutte	02/1979 → 12/1980
SOLAR - 60-Tutte	06/1986 →
Synchro 70 - CORSARO-Tutte	03/1978 → 12/1980
TAURUS - 60-Tutte	11/1978 → 12/1984
TAURUS - C-Tutte	06/1980 → 12/1983
TIGER - 100-Tutte	01/1977 → 09/1980
TIGER - Six105-Tutte	01/1977 → 09/1980
TITAN - 160DT-Tutte	05/1991 →
TITAN - 190DT-Tutte	01/1992 →
TRANSPORTER - 85-Tutte	01/1991 →
VIGNERON - 60-Tutte	03/1978 → 02/1988
VIGNERON - 70-Tutte	06/1982 → 02/1988
STEYR	
FARM-288	→
FARM-290	→
FARM-988	→
FARM-650 - A	11/1975 → 06/1977
FARM-658 - A	03/1977 → 12/1979
FARM-760 - A	01/1976 → 06/1977
FARM-760 - Super	01/1978 → 12/1982
FARM-768 - A	03/1977 → 12/1979

063216896010 MSN224 3,5kW 12V

AGRIFULL	
100 DT-Tutte	08/1985 →
110 DT-Tutte	05/1986 →
140 DT-Tutte	05/1985 →
SERIE 90-90 DT	05/1985 →
FIAT	
1180-Tutte	01/1980 → 12/1983
1280-Tutte	04/1981 → 12/1983
1580-Tutte	01/1980 → 12/1983
1880-Tutte	01/1980 → 12/1983
100.90-Tutte	06/1984 → 08/1988
110.90-Tutte	11/1986 → 08/1988
115.90-Tutte	01/1984 → 08/1988
130.90-Tutte	01/1984 → 08/1988
140.90-Tutte	01/1984 → 08/1988
1580 TURBO-Tutte	01/1983 → 12/1983
160.90-Tutte	01/1984 → 08/1988
180.90-Tutte	05/1988 → 08/1988
880-5-Tutte	03/1980 → 06/1984
90.90-Tutte	06/1984 → 08/1988
95.55-Tutte	10/1984 → 08/1988
955-C-Tutte	02/1981 → 12/1984




063216896010 MSN224 3,5kW 12V	
FIAT	
980 DT-Tutte	01/1980 → 06/1984
FORD NEW HOLLAND	
8430 DT-Tutte	12/1993 →
8630 DT-Tutte	12/1993 →
IVECO	
AIFO 8360-8360.05.200	→
AIFO 8361-8361.05.500	→
AIFO 8361-8361.05.500/530	→
AIFO 8361-8361.05.530	→
AIFO 8361-8361.25.500	→
DAILY I Cassone / Furgonato / Promiscuo-30-8 (10014131, 10014132, 10014137, 10014231, 10014232, 1001..)	01/1978 → 12/1989
DAILY I Cassone / Furgonato / Promiscuo-30-8 (12914111, 12914112, 12914117, 12914131, 12914137, 1291..)	01/1989 → 08/1998
DAILY I Cassone / Furgonato / Promiscuo-30-8 (14914111, 14914117, 14914211, 14914217, 14915111, 1491..)	09/1998 → 09/1998
DAILY I Cassone / Furgonato / Promiscuo-30-8 (14914111, 14914117, 14914211, 14914217, 14915111, 1491..)	01/1996 → 08/1998
DAILY I Cassone / Furgonato / Promiscuo-30-8 V (14914111, 14914117, 14914211, 14914217, 14915111, 14..)	09/1998 → 09/1998
DAILY I Cassone / Furgonato / Promiscuo-35-8 (10034131, 10034132, 10034137, 10034224, 10034231, 1003..)	01/1978 → 12/1989
DAILY I Cassone / Furgonato / Promiscuo-35-8 (12934104, 12934111, 12934112, 12934117, 12934124, 1293..)	01/1991 → 08/1998
DAILY I Cassone / Furgonato / Promiscuo-35-8 (14934104, 14934111, 14934204, 14934205, 14934211, 1493..)	09/1998 → 09/1998
DAILY I Cassone / Furgonato / Promiscuo-40-8 V	01/1983 → 06/1989
DAILY I Pianale piatto/Telaio-30-8 (10011131, 10011132, 10011231, 10011232, 10011237, 1001..)	01/1978 → 12/1989
DAILY I Pianale piatto/Telaio-30-8 (10011131, 10011132, 10011231, 10011232, 10011237, 1001..)	09/1998 → 09/1998
DAILY I Pianale piatto/Telaio-30-8 (10011131, 10011132, 10011231, 10011232, 10011237, 1001..)	01/1996 → 08/1998
DAILY I Pianale piatto/Telaio-30-8 (12910211, 12911111, 12911112, 12911117, 12911131, 1291..)	01/1992 → 08/1998




063216896010 MSN224 3,5kW 12V	
IVECO	
DAILY I Pianale piatto/Telaio-30-8 (14911111, 14911117, 14911211, 14911215, 14911217, 1491..)	09/1998 → 09/1998
DAILY I Pianale piatto/Telaio-35-8 (10031131, 10031132, 10031137, 10031224, 10031231, 1003..)	01/1978 → 12/1989
DAILY I Pianale piatto/Telaio-35-8 (12931102, 12931104, 12931111, 12931112, 12931117, 1293..)	01/1989 → 08/1998
DAILY I Pianale piatto/Telaio-35-8 (14930304, 14931104, 14931111, 14931115, 14931204, 1493..)	09/1998 → 09/1998
DAILY I Pianale piatto/Telaio-40-8	01/1983 → 06/1989
DAILY I Ribaltabile-35-8 K (14930304, 14931104, 14931111, 14931115, 14931204, 14..)	09/1998 → 09/1998
LAVERDA	
3700-Tutte	01/1983 → 12/1985
3790-Tutte	06/1985 →
3850-Tutte	04/1985 →
3890-Tutte	03/1986 →
NEW HOLLAND	
100.90-Tutte	08/1988 →
110.90-Tutte	08/1988 →
115.90-Tutte	08/1988 → 10/1990
130.90-Tutte	08/1988 → 10/1990
140.90-Tutte	08/1988 →
160.90-Tutte	08/1988 →
180.90-Tutte	08/1988 →
8830 DT-Tutte	12/1993 →
90.90-Tutte	08/1988 → 12/1991
95.55-Tutte	08/1988 → 12/1991
F 100-Tutte	09/1990 →
F 110-Tutte	09/1990 → 02/1993
F 120-Tutte	09/1990 →
F 130-Tutte	09/1990 →
F 140-Tutte	03/1993 →

063217121010 MSN226 2,5kW 12V	
FIAT	
402-Tutte	→
404 - DT-Tutte	→
420 - DT-Tutte	→
440 - DT/V-Tutte	→
450 - DT/DT-DAL-Tutte	→
455 - C-DAL/C Super-Tutte	→
470 - DT/DTS-Tutte	→
480 - 8DT-Tutte	→
480 - S/V-Tutte	→
500 - S-Tutte	→

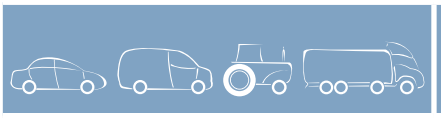


063217121010 MSN226 2,5kW 12V

GOLDONI			
MOTOCOLTIVATORE-1045 - R	→		
UTB (UNIVERSAL TRAKT. BRASOV) (ROM)			
UNIVERSAL - 350-U/DTC/DT	→		
UNIVERSAL - 445-U/DT/DTC	→		
UNIVERSAL - 453-DT/DTP/DTC	→		
UNIVERSAL - 523-U/DTC/DTP	→		
UNIVERSAL - 530-SI	→		
UNIVERSAL - 533-U/DTC/DTP	→		

063217126010 MSN227 2,5kW 12V

AGRIFULL			
SERIE 45-45 - 66RM-DT	01/1990	→	
SERIE 45-DT	02/1987	→	
SERIE 50-50	07/1986	→	
SERIE 50-50 - DT	07/1986	→	
SERIE 55-55	03/1985	→	12/1989
SERIE 55-55 - 85M/V	09/1992	→	
SERIE 55-55 - 86F/V	09/1992	→	
SERIE 55-55 - DT	03/1985	→	
SERIE 55-C Vigneto	03/1985	→	12/1989
SERIE 55-C Vigneto	01/1990	→	
SERIE 55-DT Frutteto	04/1985	→	12/1989
SERIE 55-DT Frutteto	01/1990	→	
SERIE 55-DT Vigneto	06/1987	→	
SERIE 55-Vigneto	04/1985	→	
SERIE 570-570 Frutteto / Vigneto	09/1980	→	12/1983
SERIE 60-60 - 85F/V	09/1992	→	
SERIE 60-60 - 86F/V	09/1992	→	
SERIE 60-60 - C	03/1985	→	
SERIE 60-60 - CL	01/1990	→	
SERIE 60-60 - CL	03/1985	→	12/1989
SERIE 60-60 - LM	09/1987	→	12/1990
SERIE 60-60 - LM/DT	01/1991	→	
SERIE 60-DT Frutteto	01/1990	→	
SERIE 60-DT Frutteto	03/1985	→	12/1989
SERIE 60-Frutteto	03/1985	→	
SERIE 66-66 DT	01/1985	→	
SERIE 80-80 - 46	03/1984	→	12/1984
SERIE 80-80 - 56	04/1984	→	12/1984
BENFRA			
MOVIMENTO TERRA-1.15	07/1987	→	06/1990
MOVIMENTO TERRA-1.15	07/1990	→	
FIAT			
474-Tutte	04/1983	→	12/1984

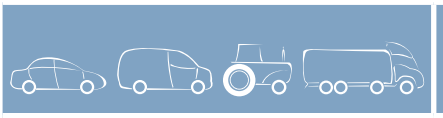


063217126010 MSN227 2,5kW 12V

FIAT			
566-Tutte	02/1982	→	12/1984
25 - H2-Tutte	11/1985	→	04/1989
25 - H4-Tutte	11/1985	→	04/1989
25 - M2-Tutte	11/1985	→	12/1988
25 - M4-Tutte	11/1985	→	12/1988
30 - H2/H4-Tutte	11/1985	→	04/1989
30 - M2/M4-Tutte	11/1985	→	12/1988
465 - C-Tutte	06/1982	→	12/1984
466 - DT-Tutte	12/1982	→	12/1984
480 - DT/S-Tutte	01/1976	→	03/1982
500 - DT-Tutte	06/1973	→	03/1982
500 - DT/S-Tutte	06/1978	→	03/1982
505 - C-Tutte	01/1973	→	12/1980
505 - S-Tutte	12/1980	→	07/1982
540 - DT/S-Tutte	03/1972	→	03/1982
55 - 46-Tutte	01/1985	→	12/1988
55 - 56-Tutte	01/1989	→	
55 - 65-Tutte	10/1984	→	02/1989
55 - 66-Tutte	01/1990	→	
55 - 66DT-Tutte	09/1984	→	
55 - 66LP-Tutte	04/1985	→	06/1988
55 - 66LP/DT-Tutte	04/1985	→	06/1988
55 - 75-Tutte	03/1989	→	
55 - 88-Tutte	01/1990	→	
55 - 90-Tutte	03/1984	→	06/1989
55 - F10-Tutte	04/1978	→	10/1980
565 - C-Tutte	06/1982	→	12/1984
570 - DT-Tutte	12/1977	→	02/1982
570 - F/V-Tutte	09/1980	→	12/1984
580 - DT-Tutte	12/1977	→	02/1984
60 - 46-Tutte	09/1987	→	12/1988
60 - 56-Tutte	01/1989	→	
60 - 65-Tutte	10/1984	→	01/1989
60 - 66-Tutte	09/1984	→	12/1989
60 - 66-Tutte	01/1990	→	
60 - 66DT-Tutte	09/1984	→	
60 - 66LP/DT-Tutte	04/1985	→	06/1988
60 - 75-Tutte	03/1989	→	
60 - 88-Tutte	11/1989	→	
60 - 90DT-Tutte	03/1984	→	06/1989
66 DT Frutteto - 55-Tutte	04/1985	→	
66 DT Frutteto - 60-Tutte	04/1985	→	06/1988
66 Frutteto - 60-Tutte	04/1985	→	06/1988




063217126010 MSN227 2,5kW 12V			
FIAT			
66 Vigneto - 55-Tutte	04/1985	→	
66DT Vigneto - 55-Tutte	05/1987	→	
BI - 20C/25C/30C-Tutte	01/1980	→	12/1987
BIM - 20/25-Tutte	01/1972	→	12/1982
DIM - 20/25-Tutte	01/1971	→	12/1982
DM - 12/15-Tutte	01/1971	→	12/1982
R - 450/DT-Tutte	06/972	→	09/1980
R - H2/H4-Tutte	11/1985	→	04/1989
R - M2/M4-Tutte	11/1985	→	12/1988
FIAT OM CARRELLI ELEV			
DI - 12/15-Tutte	01/1971	→	12/1982
FIATALLIS			
MOVIMENTO TERRA-4	11/1970	→	07/1978
MOVIMENTO TERRA-FL - 4C	11/1970	→	07/1978
IVECO			
25 - H2/H4-Tutte	11/1985	→	04/1989
25 - M2/M4-Tutte	11/1985	→	04/1989
30 - H2/H4-Tutte	11/1985	→	04/1989
30 - M2/M4-Tutte	11/1985	→	04/1989
AIFO 8035-8035 - 2300	06/1973	→	12/1984
AIFO 8040-8040 - 25900	06/1987	→	
AIFO 8041-8041 - 2301	06/1974	→	12/1980
AIFO 8041-8041 - 4200	06/1979	→	02/1980
AIFO 8041-8041 - 4250	06/1979	→	06/1983
AIFO 8041-8041 - 4260	01/1984	→	12/1984
AIFO 8041-8041 - 5260	06/1987	→	
AIFO 8045-8045 - 2285	06/1973	→	12/1981
AIFO 8045-8045 - 2300	06/1973	→	12/1981
AIFO 8061-8061 - 5260	06/1987	→	12/1989
AIFO 8141-8141 - 61200	10/1981	→	05/1983
NEW HOLLAND			
45 - 66 2RM DT-Tutte	01/1990	→	
55 - 56-Tutte	01/1989	→	
55 - 66-Tutte	01/1990	→	
55 - 66DT-Tutte	09/1984	→	
55 - 75-Tutte	03/1989	→	
55 - 85M/V-Tutte	09/1992	→	
55 - 86F/V-Tutte	09/1992	→	
55 - 88-Tutte	11/1989	→	
60 - 56-Tutte	01/1989	→	
60 - 66-Tutte	01/1990	→	
60 - 66DT-Tutte	09/1984	→	
60 - 75-Tutte	03/1989	→	




063217126010 MSN227 2,5kW 12V			
NEW HOLLAND			
60 - 85F/V-Tutte	09/1992	→	
60 - 86F/V-Tutte	09/1992	→	
60 - 88-Tutte	11/1989	→	
66 DT Frutteto - 55-Tutte	04/1985	→	
66 DT Vigneto - 45-Tutte	01/1985	→	
66 DT Vigneto - 55-Tutte	05/1987	→	
66 Vigneto - 55-Tutte	04/1985	→	
WHITE			
FARM TRACTOR-WHITE - 2-50/2-60/2-70	01/1976	→	01/1984

063217148010 MSN229 2,5kW 12V			
ALFA ROMEO			
AR 8 Furgonato (280)-2.4 D	04/1978	→	08/1986
AR 8 Furgonato (280)-2.4 TD	04/1985	→	12/1989
AR 8 Furgonato (280)-2.5 D	09/1986	→	12/1989
AR 8 Pianale piatto/Telaio (280)-2.4 D	04/1978	→	08/1986
AR 8 Pianale piatto/Telaio (280)-2.4 TD	04/1985	→	12/1988
AR 8 Pianale piatto/Telaio (280)-2.5 D	09/1986	→	12/1989
FIAT			
CAMPAGNOLA-2.4 D	06/1979	→	10/1986
IVECO			
DAILY I Autobus-A 45-10 (94159111, 94159131, 94159211, 94159311, 94159315,..)	01/1991	→	04/1996
DAILY I Autobus-A 45-12 (94179211, 94179231, 94179311, 94179317, 94179331,..)	06/1990	→	04/1996
DAILY I Cassone / Furgonato / Promiscuo-30-8 (10014131, 10014132, 10014137, 10014231, 10014232, 1001..)	08/1980	→	02/1989
DAILY I Cassone / Furgonato / Promiscuo-35-10 (10314204, 10314211, 10314212, 10314217, 10314411,103..)	01/1985	→	12/1989
DAILY I Cassone / Furgonato / Promiscuo-35-10 (12974212, 12974217, 13014111, 13014131, 13014204, 130..)	07/1992	→	04/1997
DAILY I Cassone / Furgonato / Promiscuo-35-12 (13114131, 13114204, 13114211, 13114212, 13114217, 131..)	01/1990	→	04/1996
DAILY I Cassone / Furgonato / Promiscuo-35-8 (10034131, 10034132, 10034137, 10034224, 10034231, 1003..)	01/1985	→	02/1989
DAILY I Cassone / Furgonato / Promiscuo-40-10 V	09/1989	→	12/1989
DAILY I Cassone / Furgonato / Promiscuo-45-10 V (10334204, 10334211, 10334212, 10334217, 10334404)	01/1985	→	12/1989
DAILY I Cassone / Furgonato / Promiscuo-45-10 V (13034204, 13034211, 13034212, 13034224, 13034231, 1..)	01/1989	→	04/1996




063217148010 MSN229 2,5kW 12V

IVECO

DAILY I Cassone / Furgonato / Promiscuo-49-10 V (10354204, 10354211, 10354212, 10354217, 10354404, 1..)	01/1985 → 12/1989
DAILY I Cassone / Furgonato / Promiscuo-49-10 V (13054204, 13054211, 13054212, 13054215, 13054217, 1..)	07/1992 → 04/1996
DAILY I Cassone / Furgonato / Promiscuo-49-12 V (13134124, 13134204, 13134211, 13134212, 13134217, 1..)	06/1990 → 04/1996
DAILY I Cassone / Furgonato / Promiscuo-59-12 V (13154404, 13154411, 13154412, 13154417, 13154424, 1..)	05/1991 → 04/1996
DAILY I Pianale piatto/Telaio-30-8 (10011131, 10011132, 10011231, 10011232, 10011237, 1001..)	08/1980 → 02/1989
DAILY I Pianale piatto/Telaio-35-10	07/1992 → 12/1996
DAILY I Pianale piatto/Telaio-35-10 (10310311, 10311111, 10311112, 10311117, 10311211, 103..)	01/1985 → 12/1989
DAILY I Pianale piatto/Telaio-35-10 (12971112, 12971212, 12971312, 12971317, 12976112, 129..)	07/1992 → 12/1996
DAILY I Pianale piatto/Telaio-35-12 (13110131, 13110211, 13110231, 13110311, 13110312, 131..)	01/1990 → 04/1996
DAILY I Pianale piatto/Telaio-35-8 (10031131, 10031132, 10031137, 10031224, 10031231, 1003..)	01/1985 → 02/1989
DAILY I Pianale piatto/Telaio-40-10	09/1989 → 12/1989
DAILY I Pianale piatto/Telaio-45-10 (10331211, 10331212, 10331217, 10331304, 10331311, 103..)	01/1985 → 12/1989
DAILY I Pianale piatto/Telaio-45-10 (13031204, 13031211, 13031212, 13031224, 13031231, 130..)	01/1989 → 04/1996
DAILY I Pianale piatto/Telaio-49-10 (10350211, 10350304, 10350311, 10350404, 10350411, 103..)	01/1985 → 12/1989
DAILY I Pianale piatto/Telaio-49-10 (13050211, 13050231, 13050304, 13050311, 13050331, 130..)	07/1992 → 04/1996
DAILY I Pianale piatto/Telaio-49-12 (13130211, 13130231, 13130304, 13130311, 13130312, 131..)	06/1990 → 04/1996
DAILY I Pianale piatto/Telaio-59-12 (13150204, 13150211, 13150231, 13150311, 13150312, 131..)	05/1991 → 04/1996
DAILY I Ribaltabile-45-10 (13031204, 13031211, 13031212, 13031224, 13031231, 130..)	01/1992 → 04/1996

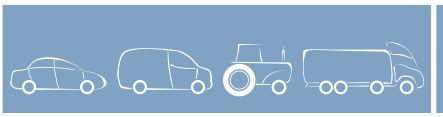


063217148010 MSN229 2,5kW 12V

IVECO

DAILY I Ribaltabile-49-10 K (13056212, 13056224, 13056231, 13056237, 13056304, 1..)	07/1992 → 04/1996
DAILY I Ribaltabile-49-12 K (13136204, 13136211, 13136212, 13136224, 13136231, 1..)	06/1990 → 04/1996
DAILY I Ribaltabile-59-12 K (13156211, 13156212, 13156231, 13156311, 13156312, 1..)	05/1991 → 04/1996
Zeta-60-10	05/1982 → 12/1986
Zeta-60-10 H	05/1982 → 12/1986
Zeta-60-10 V	05/1982 → 12/1986
Zeta-65-12	01/1987 → 03/1991
Zeta-65-12 H	01/1987 → 03/1991
Zeta-65-12 V	01/1987 → 03/1991
Zeta-65-9	01/1987 → 03/1991

063217154010 MSN230 2,5kW 12V

ALFA ROMEO

AR 6 Furgonato (280)-2.4 D	04/1985 → 02/1986
AR 6 Furgonato (280)-2.5 D	03/1986 → 12/1989

FIAT

131-2.0 D	07/1978 → 08/1984
131-2.5 Diesel	06/1978 → 02/1984
132-2.0 D	07/1978 → 12/1981
132-2.5 D	07/1978 → 12/1981
131 SW/Panorama-2.0 D	07/1978 → 08/1984
131 SW/Panorama-2.5 Super Diesel (AF)	03/1979 → 12/1984
ARGENTA (132A)-2500 Diesel	06/1981 → 11/1985
ARGENTA (132A)-2500 Turbodiesel	07/1983 → 08/1985
DUCATO Furgonato (280)-2.0	07/1985 → 08/1990
DUCATO Furgonato (280)-2.4 D	01/1982 → 12/1985
DUCATO Furgonato (280)-2.5 D	01/1982 → 08/1990
DUCATO Furgonato (280)-2.5 D 4x4	03/1989 → 08/1990
DUCATO Furgonato (290)-2.5 D 4x4	07/1990 → 03/1994
DUCATO Panorama (280)-1.9 D	02/1987 → 08/1990
DUCATO Panorama (280)-2.0	01/1986 → 08/1990
DUCATO Panorama (280)-2.4 D	07/1982 → 12/1985
DUCATO Panorama (280)-2.5 D	01/1986 → 08/1990
DUCATO Panorama (280)-2.5 D 4x4	01/1987 → 08/1990
DUCATO Panorama (290)-2.5 D	07/1990 → 03/1994
DUCATO Panorama (290)-2.5 D 4x4	07/1990 → 03/1994
DUCATO Pianale piatto/Telaio (280)-1.9 D	01/1988 → 08/1990
DUCATO Pianale piatto/Telaio (280)-2.5 D	07/1982 → 08/1990
DUCATO Pianale piatto/Telaio (280)-2.5 D 4x4	03/1989 → 08/1990




063217154010 MSN230 2,5kW 12V	
FIAT	
DUCATO Pianale piatto/Telaio (290)-2.5 D	07/1990 → 03/1994
DUCATO Pianale piatto/Telaio (290)-2.5 D 4x4	07/1990 → 03/1994
SEAT	
131-2.4 Diesel	06/1982 → 12/1984
063217226010 MSN237 3,0kW 24V	
IVECO	
EuroCargo-60 E 10	01/1991 → 05/1996
EuroCargo-60 E 12	01/1991 → 12/1996
EuroCargo-60 E 14	01/1991 → 12/1996
EuroCargo-60 E 14 K	01/1991 → 12/1996
EuroCargo-65 E 10	01/1991 → 05/1996
EuroCargo-65 E 10 K	01/1991 → 05/1996
EuroCargo-65 E 12	01/1991 → 05/1996
EuroCargo-65 E 12 K	01/1991 → 05/1996
EuroCargo-65 E 14	01/1991 → 06/1996
EuroCargo-65 E 14 K	01/1991 → 06/1996
EuroCargo-75 E 12	01/1991 → 05/1996
EuroCargo-75 E 14	01/1991 → 12/1993
Zeta-50-8	01/1983 → 12/1986
Zeta-50-8 H	01/1983 → 12/1986
Zeta-50-8 V	01/1983 → 12/1986
Zeta-50-9	01/1987 → 03/1991
Zeta-50-9 H	01/1987 → 03/1991
Zeta-50-9 V	01/1987 → 03/1991
Zeta-60-8	11/1979 → 12/1983
Zeta-65-12	01/1987 → 03/1991
Zeta-65-12 H	01/1987 → 03/1991
Zeta-65-12 V	01/1987 → 03/1991
Zeta-65-9	01/1987 → 03/1991
Zeta-79-12	01/1987 → 03/1991
Zeta-79-12 H	01/1987 → 03/1991
Zeta-79-12 V	01/1987 → 03/1991
063217410010 MSN242 2,5kW 12V	
ALFA ROMEO	
AR 8 Furgonato (280)-2.4 D	01/1985 → 08/1986
AR 8 Furgonato (280)-2.5 D	09/1986 → 12/1989
AR 8 Pianale piatto/Telaio (280)-2.4 D	01/1985 → 08/1986
AR 8 Pianale piatto/Telaio (280)-2.5 D	09/1986 → 12/1989
IVECO	
DAILY I Autobus-A 45-10 (94159111, 94159131, 94159211, 94159311, 94159315,..)	01/1991 → 04/1996
DAILY I Cassone / Furgonato / Promiscuo-30-8 (12914111, 12914112, 12914117, 12914131, 12914137, 1291..)	01/1989 → 08/1998




063217410010 MSN242 2,5kW 12V	
IVECO	
DAILY I Cassone / Furgonato / Promiscuo-30-8 (14914111, 14914117, 14914211, 14914217, 14915111, 1491..)	09/1998 → 09/1998
DAILY I Cassone / Furgonato / Promiscuo-30-8 (14914111, 14914117, 14914211, 14914217, 14915111, 1491..)	01/1996 → 08/1998
DAILY I Cassone / Furgonato / Promiscuo-30-8 V (14914111, 14914117, 14914211, 14914217, 14915111, 14..)	09/1998 → 09/1998
DAILY I Cassone / Furgonato / Promiscuo-35-10 (12974212, 12974217, 13014111, 13014131, 13014204, 130..)	07/1992 → 04/1997
DAILY I Cassone / Furgonato / Promiscuo-35-8 (12934104, 12934111, 12934112, 12934117, 12934124, 1293..)	01/1991 → 08/1998
DAILY I Cassone / Furgonato / Promiscuo-35-8 (14934104, 14934111, 14934204, 14934205, 14934211, 1493..)	09/1998 → 09/1998
DAILY I Cassone / Furgonato / Promiscuo-40-10 4x4 (15214104, 15214111, 15214117, 15215111)	01/1997 → 01/1997
DAILY I Cassone / Furgonato / Promiscuo-40-10 V	09/1989 → 12/1989
DAILY I Cassone / Furgonato / Promiscuo-40-10 V	01/1990 → 04/1996
DAILY I Cassone / Furgonato / Promiscuo-49-10 V (13054204, 13054211, 13054212, 13054215, 13054217, 1..)	07/1992 → 04/1996
DAILY I Cassone / Furgonato / Promiscuo-49-12 V (13134124, 13134204, 13134211, 13134212, 13134217, 1..)	06/1990 → 04/1996
DAILY I Cassone / Furgonato / Promiscuo-59-12 V (13154404, 13154411, 13154412, 13154417, 13154424, 1..)	05/1991 → 04/1996
DAILY I Pianale piatto/Telaio-30-8 (10011131, 10011132, 10011231, 10011232, 10011237, 1001..)	09/1998 → 09/1998
DAILY I Pianale piatto/Telaio-30-8 (10011131, 10011132, 10011231, 10011232, 10011237, 1001..)	01/1996 → 08/1998
DAILY I Pianale piatto/Telaio-30-8 (12910211, 12911111, 12911112, 12911117, 12911131, 1291..)	01/1992 → 08/1998
DAILY I Pianale piatto/Telaio-30-8 (14911111, 14911117, 14911211, 14911215, 14911217, 1491..)	09/1998 → 09/1998
DAILY I Pianale piatto/Telaio-35-10	07/1992 → 12/1996

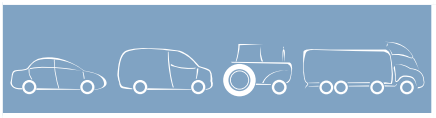


063217410010 MSN242 2,5kW 12V

IVECO	
DAILY I Pianale piatto/Telaio-35-8 (12931102, 12931104, 12931111, 12931112, 12931117, 1293..)	01/1989 → 08/1998
DAILY I Pianale piatto/Telaio-35-8 (14930304, 14931104, 14931111, 14931115, 14931204, 1493..)	09/1998 → 09/1998
DAILY I Pianale piatto/Telaio-40-10	09/1989 → 12/1989
DAILY I Pianale piatto/Telaio-40-10 W 4x4	01/1997 → 01/1997
DAILY I Pianale piatto/Telaio-49-10 (13050211, 13050231, 13050304, 13050311, 13050331, 130..)	07/1992 → 04/1996
DAILY I Pianale piatto/Telaio-49-12 (13130211, 13130231, 13130304, 13130311, 13130312, 131..)	06/1990 → 04/1996
DAILY I Pianale piatto/Telaio-59-12 (13150204, 13150211, 13150231, 13150311, 13150312, 131..)	05/1991 → 04/1996
DAILY I Ribaltabile-35-8 K (14930304, 14931104, 14931111, 14931115, 14931204, 14..)	09/1998 → 09/1998
DAILY I Ribaltabile-49-10 K (13056212, 13056224, 13056231, 13056237, 13056304, 1..)	07/1992 → 04/1996
DAILY I Ribaltabile-49-12 K (13136204, 13136211, 13136212, 13136224, 13136231, 1..)	06/1990 → 04/1996
DAILY I Ribaltabile-59-12 K (13156211, 13156212, 13156231, 13156311, 13156312, 1..)	05/1991 → 04/1996
Zeta-60-10	05/1982 → 12/1986
Zeta-60-10 H	05/1982 → 12/1986
Zeta-60-10 V	05/1982 → 12/1986
Zeta-60-11	01/1987 → 03/1991
Zeta-60-11 V	01/1987 → 03/1991

063222908010 MSN290 0,8kW 12V

AUTOBIANCHI	
A 112-0.9	10/1969 → 12/1978
A 112-0.9 E	01/1973 → 12/1977
A 112-0.9 Junior	07/1975 → 12/1985
A 112-1.0 Abarth	09/1971 → 12/1984
A 112-1.0 E,Elite,LX	11/1977 → 12/1985
FIAT	
127-0.9	06/1971 → 05/1983
CINQUECENTO (170)-0.9 (170AB)	07/1991 → 12/1993
CINQUECENTO (170)-0.9 i.e. (170AC)	07/1991 → 12/1993
CINQUECENTO (170)-0.9 i.e. S (170AF, 170CF)	07/1991 → 07/1998
FIORINO (127)-900	10/1977 → 12/1981
PANDA (141A_)-800	02/1981 → 12/1985

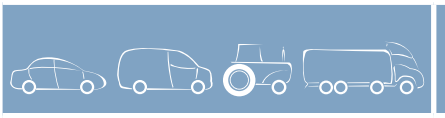


063222908010 MSN290 0,8kW 12V

FIAT	
PANDA (141A_)-900	04/1992 → 12/1996
PANDA (141A_)-1000	05/1986 → 04/1991
PANDA (141A_)-750 (141AA)	01/1986 → 01/1995
PANDA (141A_)-750 (141AM) Cat.	01/1995 → 12/1997
PANDA (141A_)-950 4x4	10/1984 → 09/1985
PANDA Van (141_)-750	01/1986 → 12/1991
SEICENTO (187)-0.9 (187AXA, 187AXA1A)	01/1998 → 02/2000
SEICENTO Van (187)-0.9 (187AXA)	06/1998 → 08/2000
UNO (146A/E)-45 0.9	04/1984 → 12/1988
UNO (146A/E)-45 i.e. 1.0	10/1984 → 12/1988
FSO	
127P-0.9	04/1971 → 10/1976
INNOCENTI	
KORAL-45	01/1990 → 12/1992
SEAT	
127 (127A)-0.9	04/1972 → 12/1977
FURA (025A)-0.9	01/1982 → 12/1986
IBIZA I (021A)-0.9	08/1986 → 05/1993
IBIZA I (021A)-1.2	11/1984 → 12/1993
IBIZA I (021A)-1.2 i	01/1989 → 05/1993
IBIZA I (021A)-1.5	11/1984 → 05/1993
IBIZA I (021A)-1.5 i	10/1986 → 01/1993
MALAGA (023A)-1.2	10/1987 → 07/1992
MALAGA (023A)-1.5	01/1987 → 07/1992
MALAGA (023A)-1.5 i	10/1987 → 07/1992
MARBELLA (28)-0.8	01/1987 → 12/1993
MARBELLA (28)-0.9	01/1987 → 12/1993
MARBELLA (28)-0.9 Cat.	01/1990 → 10/1998
MARBELLA Furgonato (028A)-0.8	01/1987 → 12/1993
MARBELLA Furgonato (028A)-0.9	01/1987 → 12/1993
PANDA (141A)-0.9	01/1982 → 12/1986
RONDA (022A)-1.2	08/1983 → 12/1986
RONDA (022A)-1.5	09/1984 → 12/1986
RONDA (022A)-1.6	08/1983 → 09/1985
RONDA (022A)-1.7 Diesel	06/1982 → 12/1986
TERRA (24)-0.9 Cat.	02/1992 → 12/1994
TERRA Furgonato (024A)-0.9	01/1987 → 12/1995

063223085010 MSN520 0,9kW 12V

FIAT	
BRAVA (182)-1.6 16V (182.BB)	02/1996 → 12/1998
BRAVA (182)-1.8 GT 16V (182.BC)	10/1995 → 10/2001





063223085010 MSN520 0,9kW 12V

FIAT		
BRAVO I (182)-1.6 16V (182.AB)	03/1996 →	12/1998
BRAVO I (182)-1.8 GT (182.AC)	11/1996 →	10/2001
ELBA (146_)-1.6	01/1994 →	12/1996
FIORINO Pick up (146)-1.4	02/1998 →	12/1998
MAREA Weekend (185)-1.6 100 16V	09/1996 →	08/2000
PALIO (178BX)-1.4 Cat.	01/1998 →	
PUNTO (176)-55 1.1	09/1993 →	09/1999
REGATA (138)-100 Super 1.6	10/1983 →	12/1986
RITMO Bertone Cabriolet-100 1.6	10/1985 →	12/1987
RITMO I (138A)-75 i.e. 1.5	10/1985 →	05/1987
SCUDO Combinato (220P)-1.6	02/1996 →	12/2003
SCUDO Furgonato (220L)-1.6	02/1996 →	12/2003
SIENA (178_)-1.4	07/1997 →	10/2003
SIENA (178_)-1.4 Cat.	07/1997 →	10/2003
TEMPRA (159)-1.4 i.e. (159.AC)	03/1991 →	12/1993
TEMPRA (159)-1.6	03/1990 →	04/1993
TEMPRA (159)-1.6 i.e. (159.AS, 159.AT)	06/1992 →	08/1996
TEMPRA S.W. (159)-1.4 i.e. (159.AC)	03/1991 →	08/1996
TEMPRA S.W. (159)-1.6 i.e. (159.AS, 159.AT)	10/1992 →	08/1996
TIPO (160)-1.4 i.e.	01/1990 →	03/1993
TIPO (160)-1.6 (160.AE)	01/1988 →	12/1990
TIPO (160)-1.6 i.e. (160.A1, 160.EC, 160.EB)	10/1992 →	04/1995
UNO (146A/E)-1.3 Turbo i.e.	04/1985 →	03/1991
UNO (146A/E)-1.4 Turbo i.e.	01/1993 →	12/1996
UNO (146A/E)-70 i.e. 1.4	09/1989 →	12/1992
UNO (146A/E)-70 S 1.4	09/1989 →	10/1992
UNO (146A/E)-75 i.e. 1.5	10/1985 →	12/1988
LANCIA		
DEDRA (835)-1.6 16V (835EI)	02/1997 →	07/1999
DEDRA (835)-1.6 i.e. (835AA)	08/1989 →	07/1999
DEDRA (835)-1.6 LE (835EB) Cat.	07/1994 →	08/1997
DEDRA (835)-1.8 16V LE (835FG)	03/1996 →	10/1998
DEDRA (835)-1.9 TDS (835EE, 835EF)	09/1989 →	07/1999
DEDRA SW (835)-1.6 (835EB)	10/1994 →	08/1997
DEDRA SW (835)-1.6 16V (835EI)	02/1997 →	07/1999
DEDRA SW (835)-1.8 16V LE (835FG)	03/1996 →	04/1997
DELTA I (831AB0)-1.5 (831AB.025)	09/1982 →	06/1987
DELTA II (836)-1.4 i.e. (836AF, 836AH)	01/1995 →	08/1999
DELTA II (836)-1.6 i.e. (836AD)	11/1993 →	08/1999
DELTA II (836)-1.8 i.e. 16V (836AQ)	03/1996 →	04/1998
PRISMA (831AB0)-1.5	01/1983 →	12/1989

063223101010 MSN274 0,9kW 12V

FIAT		
BRAVA (182)-1.6 16V (182.BH)	10/1995 →	12/1998





063223101010 MSN274 0,9kW 12V

FIAT		
BRAVO I (182)-1.6 16V (182.AH)	10/1995 →	12/1998
DOBLO (119)-1.6 16V (223AXD1A)	10/2001 →	
DOBLO Cargo (223)-1.6 16V (223ZXD1A)	10/2001 →	
FIORINO (147)-1.5	01/1988 →	08/1993
FIORINO Furgonato (146 Uno)-70 i.e. 1.4	01/1993 →	05/2001
FIORINO Furgonato (146 Uno)-75 i.e. 1.5	05/1988 →	12/1993
FIORINO Furgonato (146 Uno)-75 i.e. 1.6	10/1993 →	05/2001
FIORINO Pick up (146)-1.6	01/1994 →	12/1995
MAREA (185)-1.6 100 16V	09/1996 →	
MAREA (185)-1.6 100 16V Bipower	04/1999 →	
MAREA (185)-1.6 16V	04/1997 →	02/1999
MAREA Weekend (185)-1.6 100 16V	09/1996 →	
PALIO (178BX)-1.6 16V	04/1996 →	
PALIO Weekend (178DX)-1.6 16V (178DX.D1A)	04/1996 →	02/2001
PALIO Weekend (178DX)-1.6 16V (178DYC1A06)	02/2001 →	
PUNTO (176)-1.4 GT Turbo	01/1994 →	09/1999
REGATA (138)-100 Super 1.6	10/1983 →	05/1986
REGATA (138)-75 1.5	12/1983 →	12/1987
REGATA (138)-75 i.e. 1.5	07/1985 →	07/1989
REGATA (138)-85 1.5	05/1985 →	12/1987
REGATA (138)-85 1.6	01/1984 →	12/1987
REGATA (138)-85 Super 1.5	09/1983 →	04/1985
REGATA Weekend-100 1.6 (RF)	09/1984 →	12/1986
REGATA Weekend-75 1.5	01/1985 →	07/1989
REGATA Weekend-75 1.5 i.e. Cat.	12/1986 →	12/1987
REGATA Weekend-85 1.5	01/1984 →	12/1987
RITMO Bertone Cabriolet-100 1.6	10/1985 →	12/1987
RITMO Bertone Cabriolet-85 1.5	01/1981 →	12/1985
RITMO I (138A)-60 1.0	09/1978 →	09/1982
RITMO I (138A)-75 1.5	01/1981 →	09/1982
RITMO I (138A)-85 1.5	01/1981 →	09/1982
RITMO I (138A)-90 i.e. 1.6	05/1987 →	12/1987
RITMO II (138A)-100 1.6	01/1985 →	12/1987
RITMO II (138A)-75 1.5 Cat.	09/1985 →	12/1988
RITMO II (138A)-85 1.5	01/1985 →	12/1987
RITMO II (138A)-90 1.6 i.e.	05/1987 →	12/1987
SCUDO Combinato (220P)-1.6	02/1996 →	05/2000
SCUDO Furgonato (220L)-1.6	02/1996 →	05/2000
SIENA (178_)-1.4	04/1996 →	
SIENA (178_)-1.4 Cat.	05/1998 →	05/1999
SIENA (178_)-1.6 16V	09/1998 →	
TEMPRA (159)-1.4 i.e. (159.AC, 159.AX)	03/1991 →	12/1993
TEMPRA (159)-1.6	03/1990 →	04/1993

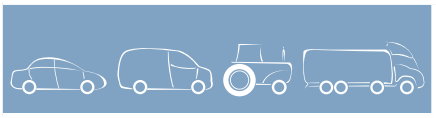


063223101010 MSN274 0,9kW 12V	
FIAT	
TEMPRA (159)-1.6 i.e. (159.AE)	06/1990 → 08/1996
TEMPRA S.W. (159)-1.4 i.e. (159.AC)	10/1992 → 12/1993
TEMPRA S.W. (159)-1.6	12/1990 → 04/1993
TEMPRA S.W. (159)-1.6 i.e. (159.AE)	01/1991 → 08/1996
TIPO (160)-1.4 (160.AC)	07/1987 → 12/1989
TIPO (160)-1.4 i.e.	05/1989 → 04/1995
TIPO (160)-1.6 i.e.	02/1988 → 04/1995
UNO (146A/E)-1.4	01/1993 → 03/1994
UNO (146A/E)-1.4 Turbo i.e.	12/1989 → 09/1993
UNO (146A/E)-60 1.1	01/1987 → 12/1992
UNO (146A/E)-70 1.3	01/1984 → 04/1985
UNO (146A/E)-70 i.e. 1.4	01/1993 → 12/1993
UNO (146A/E)-75 i.e. 1.5	09/1989 → 12/1992
INNOCENTI	
ELBA (146)-1.4 i.e. (146EN, 146EQ)	09/1994 → 12/1996
ELBA (146)-1.6 i.e. (146EO, 146ER)	09/1994 → 12/1996
LANCIA	
DEDRA (835)-1.6 i.e. (835AB)	08/1989 → 03/1993
DEDRA (835)-1.6 LE (835EB) Cat.	07/1994 → 12/1998
DEDRA SW (835)-1.6 (835EB)	10/1994 → 12/1998
DELTA I (831AB0)-2.0 16V HF Evo Integrale (831AB.027)	06/1993 → 01/1994
DELTA II (836)-1.4 i.e. (836AF, 836AH)	04/1995 → 08/1999
DELTA II (836)-1.6 i.e. (836AD)	01/1995 → 08/1999
DELTA II (836)-1.6 i.e. 16V (836AO)	01/1996 → 08/1999
PRISMA (831AB0)-1.5	12/1985 → 12/1986
Y10 (156)-1.0 Turbo (156D)	03/1985 → 02/1989
Y10 (156)-1.3 i.e. Fire (156AF)	02/1989 → 12/1995
063226801010 MSN139 1,4kW 12V	
LAND ROVER	
88/109-3.5	01/1980 → 03/1983
90/110 (DHMC)-3.5 V8	11/1983 → 07/1990
DEFENDER (LD)-3.5 4x4	01/1993 → 12/1998
DEFENDER Station Wagon (LD)-3.5 4x4	01/1993 → 12/1998
DEFENDER Station Wagon (LD)-3.9 V8	11/1998 → 12/2001
DISCOVERY I (LJ, LG)-3.5 (SALLJG)	10/1989 → 06/1994
DISCOVERY I (LJ, LG)-3.9 V8	10/1993 → 10/1998
DISCOVERY II (LJ, LT)-3.9 V8	06/1994 → 11/1998
DISCOVERY II (LJ, LT)-4.0 V8	01/1999 → 06/2004
DISCOVERY III (TAA)-4.0 V6 4x4	10/2004 → 08/2009
RANGE ROVER I (AE, AN, HAA, HAB, HAM, HBM, RE, RN)-3.5	01/1987 → 09/1990
RANGE ROVER I (AE, AN, HAA, HAB, HAM, HBM, RE, RN)-3.5 Vogue	10/1985 → 09/1990

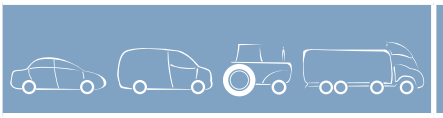


063226801010 MSN139 1,4kW 12V	
LAND ROVER	
RANGE ROVER I (AE, AN, HAA, HAB, HAM, HBM, RE, RN)-3.9 Cat.	11/1988 → 07/1994
RANGE ROVER I (AE, AN, HAA, HAB, HAM, HBM, RE, RN)-4.3 Vogue LSE	09/1992 → 07/1994
RANGE ROVER II (LP)-3.9	09/1994 → 03/2002
RANGE ROVER II (LP)-4.0	06/1998 → 03/2002
RANGE ROVER II (LP)-4.6	09/1994 → 03/2002
063227470010 MSN184 2,2kW 12V	
BUHRER	
OS 13-Tutte	01/1971 → 01/1978
HOLDER	
B50-Tutte	01/1976 → 06/1979
B51-Tutte	01/1976 → 06/1979
LANDINI	
50-Tutte	→
60-Tutte	→
5860-Tutte	→
6060-Tutte	→
5560 - F/L-Tutte	→
5560 - V-Tutte	→
6060 - F/L/V-Tutte	→
ADVANTAGE - 60-Tutte	→
ADVANTAGE - 65-Tutte	→
BLIZZARD-Tutte	→
CF - 5030-Tutte	→
CF - 5830-Tutte	→
CF - 6060-Tutte	→
MASSEY FERGUSON	
CRAWLER-MF 134 - C	01/1973 →
MF 133 - Standard/Super-Tutte	01/1969 →
MF 135-Tutte	01/1969 →
MF 140 - Vineyard-Tutte	01/1969 →
MF 145-Tutte	01/1969 →
MF 148-Tutte	01/1973 →
MF 152-Tutte	01/1971 →
MF 154-Tutte	01/1971 →
MF 154 - C Crawler-Tutte	01/1971 →
MF 20 - B-Tutte	01/1970 → 01/1981
MF 20 - E-Tutte	01/1982 →
MF 2203-Tutte	01/1969 →
MF 2205-Tutte	01/1969 →
MF 230-Tutte	01/1983 →
MF 235-Tutte	01/1977 →
MF 240-Tutte	01/1977 →




063227470010 MSN184 2,2kW 12V

MASSEY FERGUSON			
MF 245-Tutte	01/1976	→	
MF 250-Tutte	01/1982	→	
MF 255-Tutte	01/1977	→	12/1988
MF 354 - S/V/F-Tutte		→	
MF 364 - S/V/F-Tutte		→	
MF 40-Tutte	01/1970	→	
MF 4500 - Series-Tutte	01/1973	→	
MF 550-Tutte	01/1976	→	01/1982
MF 5500 - Series-Tutte	01/1973	→	
MF 6000 - Series-Tutte	01/1969	→	01/1973
MF 81-Tutte	01/1969	→	
PERKINS			
3.152-3.152	01/1979	→	
AD 3.152-Tutte		→	
AT 3.152-Tutte		→	
T 3.1524-Tutte		→	
RENAULT AGRICULTURE			
501-4-Tutte		→	
601-4-Tutte		→	

063227486010 MSN180 2,2kW 12V

ATLAS (H.WEYHAUSEN KG)			
D3152-Tutte	01/1970	→	01/1975
ATLAS COPCO			
COMPRESOR-Tutte	01/1975	→	
BARBER GREENE			
Hydrostatic Finisher-SA - 141/131/140	01/1976	→	
BEDFORD			
SB-SP - Coach (300)-Tutte	01/1975	→	01/1984
TL 1000 330-Tutte	01/1980	→	01/1982
TL 1260 330-Tutte	01/1980	→	01/1982
TL 1630 330 - Turbo (107 bhp)-Tutte	01/1982	→	01/1986
TL 860 330-Tutte	01/1980	→	01/1982
CASE IH			
1820-Tutte	01/1975	→	03/1997
ACCO1820-Tutte	01/1975	→	03/1997
TX36-Tutte	03/1997	→	
COMPAIR			
HYDROVANE-85DS-100DS	01/1976	→	
DENNIS			
DOMINANT-Tutte	01/1979	→	12/1979
MUNICIPAL-Tutte	01/1979	→	
HY-MAC			
CRAWLERS EXCAVATOR-590	01/1973	→	




063227486010 MSN180 2,2kW 12V

HY-MAC			
CRAWLERS EXCAVATOR-690	01/1973	→	
CRAWLERS EXCAVATOR-1080	01/1973	→	
CRAWLERS EXCAVATOR-1290	01/1973	→	
CRAWLERS EXCAVATOR-580C	01/1970	→	
CRAWLERS EXCAVATOR-880C	01/1973	→	
EXCAVATORS-880C	01/1973	→	
Wheeled Excavator-595	01/1973	→	
Wheeled Excavator-596	01/1973	→	
HYUNDAI			
POLISHER RICE MACHINE-HD3000	01/1973	→	
INGERSOLL-RAND			
COMPRESSORS-140SL	01/1976	→	
COMPRESSORS-175SL	01/1976	→	
COMPRESSORS-250SL	01/1976	→	
COMPRESSORS-DR140S	01/1976	→	
COMPRESSORS-DR175S	01/1976	→	
COMPRESSORS-DR250S	01/1976	→	
JCB LANDPOWER			
BACKHOE LOADERS-3CX-4	01/1994	→	
BACKHOE LOADERS-4CX		→	
EXCAVATORS-807C	01/1982	→	
FASTRAC-1115	01/1995	→	01/1997
FASTRAC-125/135/155/185	01/1993	→	
FASTRAC-125/145	01/1991	→	01/1993
LOADERS-430	01/1983	→	
LOADERS-420TU	01/1982	→	01/1991
POWER SLIDE EXCAVATORS-811/812/814	01/1985	→	
POWER SLIDE EXCAVATORS-817/818/820	01/1985	→	
LANDINI			
LEGEND-Tutte		→	
LAVERDA			
COMBINE-M 150	01/1971	→	01/1975
LINER CONCRETE			
GIRAFFE-Tutte	01/1976	→	
MASSEY FERGUSON			
CRAWLER TRACTOR-MF 200 - B	01/1969	→	12/1992
MF 1200-Tutte	01/1971	→	01/1979
MF 3145-Tutte		→	
MF 3680-Tutte	06/1988	→	
MF 6160-Tutte	01/1995	→	01/1997
MF 6170-Tutte	01/1996	→	
MF 6180-Tutte	01/1996	→	
MF 8110-Tutte		→	

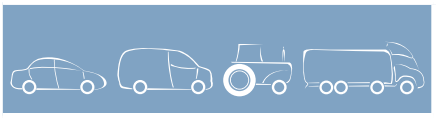


063227486010 MSN180 2,2kW 12V		
MASSEY FERGUSON		
MF 8120-Tutte	→	
MF 8130-Tutte	→	
MF 8240-Tutte	→	
MF 8250-Tutte	→	
MF 8260-Tutte	→	
MF 8270-Tutte	01/1999	→
MF 8280-Tutte	→	
PERKINS		
4.440-Tutte	02/1997	→ 03/1997
6.660-Tutte	02/1978	→ 03/1997
1004-4 T-Tutte	→	
RELIANCE MERCURY		
AIRCRAFT TRACTOR-RM 150	01/1977	→ 12/1980
AIRCRAFT TRACTOR-RM 40/50/60/70	01/1977	→ 12/1980
RENAULT TRUCKS		
Series Diesel - 50-Tutte	01/1979	→
SAMPO ROSENLEW		
Combine-3.9	01/1970	→ 09/1990
SANDERSON		
TELEPORTER 2-5M-26/6-22 Fram Handler	01/1987	→
TELEPORTER 2-7-25 Fram Handler	01/1992	→
TRACK MARSHALL		
TM Series-TM1600	01/1973	→ 12/1978
TM Series-TM1700	01/1973	→ 12/1978
TM Series-TM75	01/1971	→ 12/1971
TM Series-TM85F Pipelayer	01/1973	→ 12/1978
TM Series-TM90 Pipelayer	01/1973	→ 12/1978

063227488010 MSN175 2,2kW 12V		
BUHRER		
OS 13-Tutte	01/1971	→ 01/1978
HOLDER		
B50-Tutte	01/1976	→ 06/1979
B51-Tutte	01/1976	→ 06/1979
LANDINI		
50-Tutte	→	
60-Tutte	→	
5860-Tutte	→	
6060-Tutte	→	
5560 - F/L-Tutte	→	
5560 - V-Tutte	→	
6060 - F/L/V-Tutte	→	
ADVANTAGE - 60-Tutte	→	
ADVANTAGE - 65-Tutte	→	

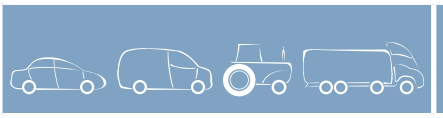


063227488010 MSN175 2,2kW 12V		
LANDINI		
BLIZZARD-Tutte	→	
CF - 5030-Tutte	→	
CF - 5830-Tutte	→	
CF - 6060-Tutte	→	
MASSEY FERGUSON		
CRAWLER-MF 134 - C	01/1973	→
MF 133 - Standard/Super-Tutte	01/1969	→
MF 135-Tutte	01/1969	→
MF 140 - Vineyard-Tutte	01/1969	→
MF 145-Tutte	01/1969	→
MF 148-Tutte	01/1973	→
MF 152-Tutte	01/1971	→
MF 154-Tutte	01/1971	→
MF 154 - C Crawler-Tutte	01/1971	→
MF 20 - B-Tutte	01/1970	→ 01/1981
MF 20 - E-Tutte	01/1982	→
MF 2203-Tutte	01/1969	→
MF 2205-Tutte	01/1969	→
MF 230-Tutte	01/1983	→
MF 235-Tutte	01/1977	→
MF 240-Tutte	01/1977	→
MF 245-Tutte	01/1976	→
MF 250-Tutte	01/1982	→
MF 255-Tutte	01/1977	→ 12/1988
MF 354 - S/V/F-Tutte	→	
MF 364 - S/V/F-Tutte	→	
MF 40-Tutte	01/1970	→
MF 4500 - Series-Tutte	01/1973	→
MF 550-Tutte	01/1976	→ 01/1982
MF 5500 - Series-Tutte	01/1973	→
MF 6000 - Series-Tutte	01/1969	→ 01/1973
MF 81-Tutte	01/1969	→
PERKINS		
3.152-3.152	01/1979	→
AD 3.152-Tutte	→	
AT 3.152-Tutte	→	
T 3.1524-Tutte	→	
RENAULT AGRICULTURE		
501-4-Tutte	→	
601-4-Tutte	→	

063227501010 MSN207 2,8kW 12V		
FORD		
TRANSIT Autobus (E_ _)-2.5 DI (EBL, ECL, EDS, EDL)	08/1991	→ 12/1996




063227501010 MSN207 2,8kW 12V

FORD		
TRANSIT Furgonato (E_ _)-2.5 DI (EAL, EAS)	05/1991 →	12/1996
TRANSIT Furgonato (T_ _)-2.5 D (TAL, TAS, TGL, TWS)	01/1986 →	09/1991
TRANSIT Furgonato (V_ _)-2.4 D (VVS)	04/1978 →	05/1984
TRANSIT Furgonato (V_ _)-2.5 D (VVL)	01/1984 →	10/1986
TRANSIT Pianale piatto/Telaio (E_ _)-2.5 DI (EME/L/S, ENE/L/S)	09/1991 →	12/1996
TRANSIT Pianale piatto/Telaio (T_ _)-2.5 D (TTL, TTS, TUL, TUS, TTE) Cat.	01/1986 →	01/1989
TRANSIT Pianale piatto/Telaio (T_ _)-2.5 DI (TTE, TTL, TTS, TUL)	09/1988 →	12/1991
TRANSIT Pianale piatto/Telaio (V_ _)-2.4 D (VGL, VSL, VTL, VCS, VDS)	04/1978 →	05/1984
TRANSIT Pianale piatto/Telaio (V_ _)-2.5 D (VGL, VSL, VTL, VCS, VDS)	01/1984 →	10/1986

063227569010 MSN202 2,8kW 12V

AVELING BARFORD		
DC-Tutte	01/1980 →	
ROAD ROLLER-GC4,GD4	01/1972 →	01/1976
ROAD ROLLER-GN	01/1965 →	01/1979
ROAD ROLLER-PM20	01/1977 →	01/1978
ROAD ROLLER-PR15	01/1977 →	01/1978
ROAD ROLLER-PTR	01/1972 →	01/1976
ROAD ROLLER-TR	01/1965 →	01/1979
ROAD ROLLER-VP VIBRATORY	01/1969 →	01/1973
ROAD ROLLER-VS	01/1969 →	01/1973
ROAD ROLLER-VSA-VXC011	01/1977 →	
TD-Tutte	01/1980 →	
BARBER GREENE		
Asphalt Finisher-SA141	01/1976 →	
Asphalt Finisher-SB30	01/1976 →	
Hydrostatic Finisher-SB131	01/1976 →	
Hydrostatic Finisher-SB140	01/1976 →	
BUHRER		
OS 20-Tutte	01/1972 →	01/1973
CASE IH		
1694-Tutte	01/1984 →	01/1987
1394-2WD-Tutte	01/1984 →	01/1988
1494-2WD-Tutte	01/1984 →	01/1987
1594-2WD-Tutte	01/1984 →	01/1988
1690-2WD/4WD-Tutte	01/1984 →	01/1985
COMPAIR		
HYDROVANE-152GT Compressor	01/1976 →	




063227569010 MSN202 2,8kW 12V

COMPAIR		
HYDROVANE-180GT Compressor	01/1976 →	
DAVID BROWN (CASE)		
1594-Tutte	→	
1410-1412-Tutte	→	
1690-1694-Tutte	→	
DENNIS		
BULKMASTER-50 Municipal	01/1972 →	01/1979
BULKMASTER-70 Municipal	01/1972 →	01/1979
DOMINANT-Tutte	01/1972 →	01/1979
FORD MARINE		
2627T-Tutte	→	
FORD NEW HOLLAND		
550-Tutte	→	
2310-Tutte	→	
2610-Tutte	→	
2810-Tutte	→	
3230-Tutte	→	
3310-Tutte	01/1982 →	
3430-Tutte	→	
3610-Tutte	→	
3900-Tutte	→	
4110-Tutte	→	
4610-Tutte	01/1982 →	
4630-Tutte	→	
5610-Tutte	01/1979 →	
5700-Tutte	→	
5900-Tutte	→	
6410-Tutte	→	
6610-Tutte	01/1979 →	
6710-Tutte	01/1979 →	
6810-Tutte	→	
7410-Tutte	→	
7810-Tutte	→	
7910-Tutte	01/1982 →	
8200-Tutte	→	
8210-Tutte	→	
8401-Tutte	→	
8530-Tutte	→	
8630-Tutte	→	
8730-Tutte	→	
8830-Tutte	→	
9000-Tutte	→	
9600,67-Tutte	01/1979 →	




063227569010 MSN202 2,8kW 12V

FORD NEW HOLLAND	
9700-Tutte	01/1979 →
2000-3-Tutte	01/1965 →
2514 - E-Tutte	→
2910-391-Tutte	01/1982 →
3310X4-Tutte	01/1982 →
3910H-Tutte	→
3930H-Tutte	→
4000-5-Tutte	01/1965 →
4100-46-Tutte	01/1979 →
4130H-Tutte	→
5600-66-Tutte	01/1979 →
655-A/E-Tutte	01/1996 → 01/1997
7000-8-Tutte	01/1965 →
7600-86-Tutte	01/1979 →
7610-771-Tutte	01/1982 →
7700-87-Tutte	01/1979 →
Combine-620	→
Combine-622	→
County-654	→
County-754	→
County-764	→
County-774	→
County-944	→
County-964	→
County-974	→
County-1164	→
County-TW 1164	→
County-TW 1184	→
DIGGER-TRENCH	→
Speed Power-1112	→
Speed Power-910-912	→
TW 10-Tutte	→
TW 15-Tutte	→
TW 20-Tutte	→
TW 25-Tutte	→
TW 30-Tutte	→
TW 35-Tutte	→
TW 5-Tutte	→
INGERSOLL-RAND	
COMPRESSORS-140SL	01/1976 →
COMPRESSORS-175SL	01/1976 →
COMPRESSORS-250LS	01/1976 →
COMPRESSORS-DR140S	01/1976 →
COMPRESSORS-DR175S	01/1976 →

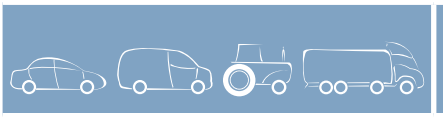


063227569010 MSN202 2,8kW 12V

INGERSOLL-RAND	
COMPRESSORS-DR250S	01/1976 →
JCB LANDPOWER	
EXCAVATORS-805	01/1976 → 01/1978
EXCAVATORS-806/806B	01/1973 → 01/1982
EXCAVATORS-807/807B	→
MATBRO	
Dwing Lift Container-WT	→
Heavy Duty Fork-Y300	→
Swing Lift-200	→
Swing Lift-220	→
Swing Lift-240	→
Swing Lift-260	→
Swing Lift-S80	→
Yard Fork Lift-80	→
Yard Fork Lift-100	→
Yard Fork Lift-120	→
Yard Fork Lift-150	→
Yard Fork Lift-Y60	→
MUIRHILL	
Tractor WD - M-H121-Tutte	→
RELIANCE MERCURY	
AIRCRAFT TRACTOR-RM 40 - Shunt Tug	→
AIRCRAFT TRACTOR-RM 50 - Shunt Tug	→
AIRCRAFT TRACTOR-RM 60 - Shunt Tug	→
AIRCRAFT TRACTOR-RM 70 - Shunt Tug	→
SANDERSON	
SB - 55/65/75-Tutte	→
SB - 554TC-Tutte	→
SB - 754-Tutte	→
WEATHERHILL	
22HB - 2 Hydraulic-Tutte	→
LOADERS-S3/1,S3/2,S3/3	→

063227592010 MSN203 2,8kW 12V

ATLAS (H.WEYHAUSEN KG)	
D3152-Tutte	01/1970 → 01/1975
ATLAS COPCO	
COMPRESOR-Tutte	01/1975 →
BARBER GREENE	
Hydrostatic Finisher-SA - 141/131/140	01/1976 →
BEDFORD	
SB-SP - Coach (300)-Tutte	01/1975 → 01/1984
TL 1000 330-Tutte	01/1980 → 01/1982
TL 1260 330-Tutte	01/1980 → 01/1982
TL 1630 330 - Turbo (107 bhp)-Tutte	01/1982 → 01/1986




063227592010 MSN203 2,8kW 12V

BEDFORD	
TL 860 330-Tutte	01/1980 → 01/1982
CASE IH	
1820-Tutte	01/1975 → 03/1997
ACCO1820-Tutte	01/1975 → 03/1997
TX36-Tutte	03/1997 →
COMPAIR	
HYDROVANE-85DS-100DS	01/1976 →
DENNIS	
DOMINANT-Tutte	01/1979 → 12/1979
MUNICIPAL-Tutte	01/1979 →
HY-MAC	
CRAWLERS EXCAVATOR-590	01/1973 →
CRAWLERS EXCAVATOR-690	01/1973 →
CRAWLERS EXCAVATOR-1080	01/1973 →
CRAWLERS EXCAVATOR-1290	01/1973 →
CRAWLERS EXCAVATOR-580C	01/1970 →
CRAWLERS EXCAVATOR-880C	01/1973 →
EXCAVATORS-880C	01/1973 →
Wheeled Excavator-595	01/1973 →
Wheeled Excavator-596	01/1973 →
HYUNDAI	
POLISHER RICE MACHINE-HD3000	01/1973 →
INGERSOLL-RAND	
COMPRESSORS-140SL	01/1976 →
COMPRESSORS-175SL	01/1976 →
COMPRESSORS-250SL	01/1976 →
COMPRESSORS-DR140S	01/1976 →
COMPRESSORS-DR175S	01/1976 →
COMPRESSORS-DR250S	01/1976 →
JCB LANDPOWER	
BACKHOE LOADERS-3CX-4	01/1994 →
BACKHOE LOADERS-4CX	→
EXCAVATORS-807C	01/1982 →
FASTRAC-1115	01/1995 → 01/1997
FASTRAC-125/135/155/185	01/1993 →
FASTRAC-125/145	01/1991 → 01/1993
LOADERS-430	01/1983 →
LOADERS-420TU	01/1982 → 01/1991
POWER SLIDE EXCAVATORS-811/812/814	01/1985 →
POWER SLIDE EXCAVATORS-817/818/820	01/1985 →
LANDINI	
LEGEND-Tutte	→
LAVERDA	
COMBINE-M 150	01/1971 → 01/1975

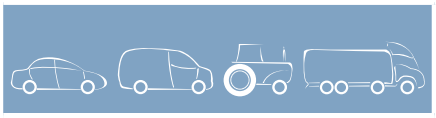


063227592010 MSN203 2,8kW 12V

LINER CONCRETE	
GIRAFFE-Tutte	01/1976 →
MASSEY FERGUSON	
CRAWLER TRACTOR-MF 200 - B	01/1969 → 12/1992
MF 1200-Tutte	01/1971 → 01/1979
MF 3145-Tutte	→
MF 3680-Tutte	06/1988 →
MF 6160-Tutte	01/1995 → 01/1997
MF 6170-Tutte	01/1996 →
MF 6180-Tutte	01/1996 →
MF 8110-Tutte	→
MF 8120-Tutte	→
MF 8130-Tutte	→
MF 8240-Tutte	→
MF 8250-Tutte	→
MF 8260-Tutte	→
MF 8270-Tutte	01/1999 →
MF 8280-Tutte	→
PERKINS	
4.440-Tutte	02/1997 → 03/1997
6.660-Tutte	02/1978 → 03/1997
1004-4 T-Tutte	→
RELIANCE MERCURY	
AIRCRAFT TRACTOR-RM 150	01/1977 → 12/1980
AIRCRAFT TRACTOR-RM 40/50/60/70	01/1977 → 12/1980
RENAULT TRUCKS	
Series Diesel - 50-Tutte	01/1979 →
SAMPO ROSENLEW	
Combine-3.9	01/1970 → 09/1990
SANDERSON	
TELEPORTER 2-5M-26/6-22 Fram Handler	01/1987 →
TELEPORTER 2-7-25 Fram Handler	01/1992 →
TRACK MARSHALL	
TM Series-TM1600	01/1973 → 12/1978
TM Series-TM1700	01/1973 → 12/1978
TM Series-TM75	01/1971 → 12/1971
TM Series-TM85F Pipelayer	01/1973 → 12/1978
TM Series-TM90 Pipelayer	01/1973 → 12/1978

063227593010 MSN540 2,8kW 12V

EICHER	
MAMMUT-Tutte	01/1975 →
MASSEY FERGUSON	
Combine Harvester-MF 20	01/1969 → 01/1981
MF 133-Tutte	01/1966 → 01/1976
MF 135-Tutte	01/1966 → 01/1979





063227593010 MSN540 2,8kW 12V		
MASSEY FERGUSON		
MF 140-Tutte	01/1971 →	
MF 145-Tutte	01/1966 →	01/1976
MF 148-Tutte	01/1971 →	01/1979
MF 152-Tutte	01/1977 →	01/1989
MF 152 - Vineyard-Tutte	01/1977 →	01/1989
MF 155 - 3-Tutte	01/1981 →	
MF 158 - F/S Vineyard --Tutte	01/1981 →	
MF 165 - 3-Tutte	01/1969 →	01/1976
MF 20E-Tutte	01/1982 →	
MF 230-Tutte	01/1973 →	
MF 230-Tutte	01/1977 →	
MF 235-Tutte	01/1977 →	
MF 240 - 3-Tutte	01/1977 →	
MF 245-Tutte	01/1979 →	12/1988
MF 250 - 3-Tutte	01/1977 →	
MF 255 - 3-Tutte	01/1973 →	01/1976
MF 35-Tutte	01/1986 →	
MF 350-Tutte	01/1986 →	
MF 360-Tutte	01/1986 →	
MF 40.3-Tutte	01/1969 →	
MF 550.3-Tutte	01/1974 →	
MF 560.3-Tutte	01/1972 →	01/1982
MF 560.6-Tutte	01/1976 →	
063227599010 MSN541 2,8kW 12V		
LANSING BAGNAL		
FODR 5 6000-Tutte	→	
LAVERDA		
COMBINE-M 150	→	
MASSEY FERGUSON		
Combine Harvester-MF 206	→	
Combine Harvester-MF 307	→	
Combine Harvester-MF 487	→	
Combine Harvester-MF 506	→	
Combine Harvester-MF 520	→	
Combine Harvester-MF 525	→	
Combine Harvester-TX 45	→	
ENGINE-Engines Travaux publics	→	
Harvester-MF 102	→	
Harvester-MF 105	→	
Harvester-MF 201	→	
Harvester-MF 205	→	
LOADER-MF 11	→	

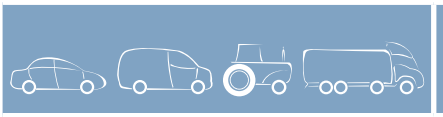



063227599010 MSN541 2,8kW 12V		
MASSEY FERGUSON		
MF 102-A6.372-AT 6.354-Tutte	01/1972 →	
MF 1080-Tutte	→	
MF 11 105-1100-12500-Tutte	01/1977 →	
MF 1100-Tutte	→	
MF 1104-Tutte	→	
MF 1114-Tutte	01/1977 →	
MF 1250 Series-Tutte	→	
MF 165-Tutte	→	
MF 168/168 F-Tutte	→	
MF 178.8-Tutte	→	
MF 185-Tutte	→	
MF 186-Tutte	→	
MF 186-487-TX45-Tutte	01/1969 →	12/1974
MF 188-Tutte	→	
MF 201/205-Tutte	01/1972 →	12/1978
MF 206-307-1104-9500-Tutte	01/1973 →	
MF 265-Tutte	→	
MF 275-Tutte	→	
MF 285-Tutte	→	
MF 285/E480-Tutte	01/1976 →	
MF 290-Tutte	→	
MF 298-Tutte	01/1983 →	
MF 30-Tutte	→	
MF 300 - Series-Tutte	→	
MF 3050-Tutte	01/1988 →	
MF 3060-Tutte	01/1988 →	
MF 3065-Tutte	01/1988 →	
MF 3070-Tutte	01/1988 →	
MF 30D/50D-Tutte	01/1982 →	
MF 365-Tutte	→	
MF 375-Tutte	01/1983 →	
MF 390 T-Tutte	→	
MF 398-Tutte	01/1983 →	
MF 399-Tutte	01/1983 →	
MF 506/520/525/620/625-Tutte	01/1971 →	
MF 50B-Tutte	01/1977 →	12/1982
MF 50B II-Tutte	01/1981 →	12/1984
MF 50B II-D-Tutte	→	
MF 50D-Tutte	01/1982 →	12/1985
MF 50E/50H/50HX-Tutte	01/1984 →	
MF 565-Tutte	→	
MF 575-Tutte	→	





063227599010 MSN541 2,8kW 12V

MASSEY FERGUSON		
MF 590-Tutte	→	
MF 592-Tutte	→	
MF 595-Tutte	→	
MF 620-Tutte	→	
MF 625-Tutte	→	
MF 675-Tutte	01/1982 →	
MF 685-Tutte	01/1971 →	
MF 690-Tutte	01/1982 →	
MF 698-Tutte	→	
MF 699-Tutte	→	
MF 9500 Series-Tutte	→	
NISSAN MOTOR IBERICA		
185-Tutte	01/1975 →	12/1978

063227602010 MSN199 2,8kW 12V

CASE IH		
1394-Tutte	01/1984 →	
1494-Tutte	01/1984 →	
1594-Tutte	01/1984 →	
1690-Tutte	01/1984 →	
1694-Tutte	01/1984 →	
FORD		
FOCUS (DAW, DBW)-1.8 16V	10/1998 →	11/2004
FOCUS (DAW, DBW)-2.0 16V	10/1998 →	11/2004
FOCUS (DAW, DBW)-ST170	03/2002 →	11/2004
FOCUS Station wagon (DNW)-1.8 16V	02/1999 →	11/2004
FOCUS Station wagon (DNW)-2.0 16V	02/1999 →	11/2004
FOCUS Station wagon (DNW)-ST170	08/2002 →	11/2004
FOCUS Tre volumi (DFW)-1.8 16V	02/1999 →	11/2004
FOCUS Tre volumi (DFW)-2.0 16V	02/1999 →	11/2004
LANDINI		
65-Tutte	→	
75-Tutte	→	
85-Tutte	→	
95-Tutte	→	
6860-Tutte	→	
6880-Tutte	→	
7860-Tutte	→	
7880-Tutte	→	
8860-Tutte	→	
8880-Tutte	→	
9080-Tutte	→	
9880-Tutte	→	
12500-Tutte	→	
13000-Tutte	→	





063227602010 MSN199 2,8kW 12V

LANDINI		
14500-Tutte	→	
10000S-Tutte	→	
6560 - F/L/V-Tutte	→	
7560 - F/L-Tutte	→	
8560 - F/L-Tutte	→	
C - 75-Tutte	→	
C - 85-Tutte	→	
C - 95-Tutte	→	
CF - 6830-Tutte	→	
CF - 75-Tutte	→	
CF - 85-Tutte	→	
MASSEY FERGUSON		
Cane Harvester-MF 102	01/1972 →	
Cane Harvester-MF 105	01/1977 →	
Cane Harvester-MF 201	01/1972 →	01/1977
Cane Harvester-MF 205	01/1977 →	01/1978
Combine Harvester-MF 206	01/1973 →	
Combine Harvester-MF 307	01/1973 →	
Combine Harvester-MF 487	01/1969 →	01/1973
Combine Harvester-MF 506	01/1975 →	
Combine Harvester-MF 520	01/1971 →	
Combine Harvester-MF 525	01/1971 →	
Combine Harvester-TX 45	01/1969 →	01/1974
LOADER-MF 11	01/1977 →	
MF 1080 - S-4RM-Tutte	→	
MF 1080 - Series Tractor-Tutte	01/1971 →	01/1974
MF 1085-Tutte	→	
MF 1100-Tutte	01/1977 →	
MF 1104-Tutte	01/1973 →	
MF 1114-Tutte	01/1977 →	
MF 1250 Series-Tutte	01/1977 →	
MF 178-Tutte	→	
MF 186-Tutte	01/1969 →	01/1971
MF 207-Tutte	01/1972 →	12/1997
MF 285 - E480-Tutte	01/1976 →	
MF 30-Tutte	01/1982 →	
MF 3060-Tutte	01/1988 →	
MF 3065-Tutte	01/1988 →	
MF 3070-Tutte	01/1988 →	
MF 374 - S/V/F-Tutte	→	
MF 384 - S/F-Tutte	→	
MF 394 - S/F-Tutte	→	
MF 50-Tutte	01/1984 →	

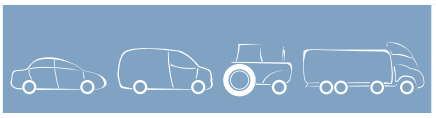


063227602010 MSN199 2,8kW 12V

MASSEY FERGUSON	
MF 50 - 10TD-Tutte	01/1984 → 02/1985
MF 50 - 10TD/9TD-Tutte	01/1981 → 01/1984
MF 50 - 9TD-Tutte	01/1984 →
MF 510-Tutte	01/1969 → 12/1997
MF 592-Tutte	01/1972 → 01/1982
MF 595-Tutte	01/1972 → 01/1982
MF 6150-Tutte	01/1992 →
MF 6160-Tutte	01/1995 → 01/1997
MF 620-Tutte	01/1971 →
MF 625-Tutte	01/1971 →
MF 675 - 9TD/10TD-Tutte	01/1982 →
MF 685-Tutte	01/1971 →
MF 690 - 9TD/10TD-Tutte	01/1982 →
MF 9500 Series-Tutte	01/1973 →
MOTOR IBERICA	
MF 185-Tutte	01/1975 → 01/1978
PERKINS	
4.203LH-Tutte	12/1997 →
A4.236-Tutte	→
A4.248-Tutte	→
A6.354.4-Tutte	→
AT 6.354.4-Tutte	→
D3.152-Tutte	12/1997 →
T 4.248-Tutte	→
T4.236-T4.236	→
RENAULT AGRICULTURE	
70-12 SP-Tutte	→
70-14 SP-Tutte	→
701-4F-Tutte	→
70-32 PA/PE/PS/PX-Tutte	→
70-34 PA/PE/PS/PX-Tutte	→
80-12 SP-Tutte	→
80-14 SP-Tutte	→
80-32 PA/PE/PS/PX-Tutte	→
80-34 PA/PE/PS/PX-Tutte	→
CERES 75-2X4/4X4	→
CERES 75X-2X4/4X4	→
URSUS	
FARM TRACTOR-4512/4514	→

063280005010 MSN8005 1,4kW 12V

FORD	
COUGAR (EC_)-2.0 16V	08/1998 → 12/2001
FOCUS (DAW, DBW)-1.8 16V	10/1998 → 11/2004

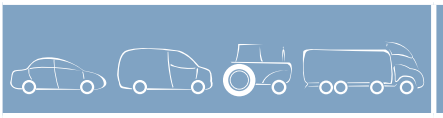


063280005010 MSN8005 1,4kW 12V

FORD	
FOCUS (DAW, DBW)-2.0 16V	10/1998 → 11/2004
FOCUS (DAW, DBW)-RS	10/2002 → 11/2004
FOCUS Station wagon (DNW)-1.8 16V	02/1999 → 11/2004
FOCUS Station wagon (DNW)-2.0 16V	02/1999 → 11/2004
FOCUS Tre volumi (DFW)-1.8	09/2002 → 08/2003
FOCUS Tre volumi (DFW)-1.8 16V	02/1999 → 11/2004
FOCUS Tre volumi (DFW)-2.0 16V	02/1999 → 11/2004
MONDEO I (GBP)-1.6 i 16V	02/1993 → 08/1996
MONDEO I (GBP)-1.8 i 16V	02/1993 → 08/1996
MONDEO I (GBP)-2.0 i 16V	02/1993 → 08/1996
MONDEO I Station wagon (BNP)-1.6 i 16V	04/1993 → 08/1996
MONDEO I Station wagon (BNP)-1.8 i 16V	04/1993 → 08/1996
MONDEO I Station wagon (BNP)-2.0 i 16V	01/1993 → 08/1996
MONDEO I Tre volumi (GBP)-1.6 i 16V	02/1993 → 08/1996
MONDEO I Tre volumi (GBP)-1.8 i 16V	02/1993 → 08/1996
MONDEO I Tre volumi (GBP)-2.0 i 16V	02/1993 → 08/1996
MONDEO II (BAP)-1.6 i	09/1996 → 11/2000
MONDEO II (BAP)-1.6 i 16V	05/1998 → 11/2000
MONDEO II (BAP)-1.8 i	09/1996 → 11/2000
MONDEO II (BAP)-2.0 i	09/1996 → 11/2000
MONDEO II Station wagon (BNP)-1.6 i	09/1996 → 11/2000
MONDEO II Station wagon (BNP)-1.6 i 16V	05/1998 → 11/2000
MONDEO II Station wagon (BNP)-1.8 i	09/1996 → 11/2000
MONDEO II Station wagon (BNP)-2.0 i	09/1996 → 11/2000
MONDEO II Tre volumi (BFP)-1.6 i	09/1996 → 11/2000
MONDEO II Tre volumi (BFP)-1.6 i 16V	05/1998 → 11/2000
MONDEO II Tre volumi (BFP)-1.8 i	09/1996 → 11/2000
MONDEO II Tre volumi (BFP)-2.0 i	09/1996 → 11/2000
TOURNEO CONNECT-1.8 16V	06/2002 →
TRANSIT CONNECT (P65_, P70_, P80_)-1.8 16V	06/2002 →

063280006010 MSN8006 1,1kW 12V

FORD	
ESCORT CLASSIC Turnier (ANL)-1.8 TD	02/1999 → 07/2000
ESCORT VI (GAL)-1.3	09/1992 → 01/1995
ESCORT VII (GAL, AAL, ABL)-1.3	01/1995 → 10/1998
ESCORT VII (GAL, AAL, ABL)-1.8 TD	01/1995 → 10/1998
ESCORT VII (GAL, AAL, ABL)-1.8 Turbo D	12/1995 → 10/1998
ESCORT VII Cabriolet (ALL)-1.8 TD	09/1995 → 08/1998
ESCORT VII Cabriolet (ALL)-1.8 Turbo D	10/1996 → 08/1999
ESCORT VII Station wagon (GAL, ANL)-1.3	01/1995 → 10/1998
ESCORT VII Station wagon (GAL, ANL)-1.8 TD	01/1995 → 02/1999
ESCORT VII Station wagon (GAL, ANL)-1.8 Turbo D	12/1995 → 02/1999
ESCORT VII Tre volumi (GAL, AFL)-1.3	01/1995 → 02/1999
ESCORT VII Tre volumi (GAL, AFL)-1.8 TD	01/1995 → 10/1998




063280006010 MSN8006 1,1kW 12V

FORD			
ESCORT VII Tre volumi (GAL, AFL)-1.8 Turbo D	12/1995	→	02/1999
FIESTA Furgonato (JV_)-D 1.8	05/1998	→	
FIESTA Furgonato (JV_)-TD 1.8	03/2000	→	
FIESTA IV (JA_, JB_)-1.3 i	08/1995	→	01/2002
FIESTA IV (JA_, JB_)-1.8 D	08/1995	→	04/2000
KA (RB_)-1.3 i	09/1996	→	11/2008
MONDEO II (BAP)-1.8 TD	09/1996	→	11/2000
MONDEO II Station wagon (BNP)-1.8 TD	09/1996	→	11/2000
MONDEO II Tre volumi (BFP)-1.8 TD	09/1996	→	11/2000
MAZDA			
121 III (JASM, JBSM)-1.3	03/1996	→	

063280008010 MSN8008 2,2kW 12V

FORD			
COURIER Pick-up-1.8 D	06/1999	→	02/2002
ESCORT '95 Furgonato (AVL)-1.8 D	01/1995	→	
ESCORT '95 Furgonato (AVL)-1.8 Turbo D	12/1995	→	06/2001
ESCORT CLASSIC (AAL, ABL)-1.8 TD	10/1998	→	07/2000
ESCORT CLASSIC Turnier (ANL)-1.8 TD	02/1999	→	07/2000
ESCORT VI (GAL)-1.8 D	09/1992	→	01/1995
ESCORT VI (GAL)-1.8 TD	02/1993	→	01/1995
ESCORT VI Tre volumi (GAL)-1.8 D	08/1993	→	01/1995
ESCORT VI Tre volumi (GAL)-1.8 TD	08/1993	→	01/1995
ESCORT VII (GAL, AAL, ABL)-1.8 D	01/1995	→	12/1996
ESCORT VII Cabriolet (ALL)-1.8 TD	09/1995	→	08/1998
ESCORT VII Station wagon (GAL, ANL)-1.8 D	01/1995	→	02/1999
ESCORT VII Station wagon (GAL, ANL)-1.8 TD	01/1995	→	02/1999
ESCORT VII Tre volumi (GAL, AFL)-1.8 D	01/1995	→	12/1996
ESCORT VII Tre volumi (GAL, AFL)-1.8 TD	01/1995	→	10/1998
ESCORT VII Tre volumi (GAL, AFL)-1.8 Turbo D	12/1995	→	02/1999
FIESTA Furgonato (FVD)-1.8 D (FVJ)	03/1989	→	12/1995
FIESTA Furgonato (FVD)-1.8 TD	07/1993	→	08/1995
FIESTA Furgonato (JV_)-D 1.8	05/1998	→	
FIESTA Furgonato (JV_)-TD 1.8	03/2000	→	
FIESTA III (GFJ)-1.8 D	03/1989	→	12/1995
FIESTA III (GFJ)-1.8 TD	03/1993	→	12/1995
FIESTA IV (JA_, JB_)-1.8 D	08/1995	→	04/2000
FIESTA IV (JA_, JB_)-1.8 DI	04/2000	→	01/2002
FOCUS (DAW, DBW)-1.8 DI / TDDi	08/1999	→	11/2004
FOCUS (DAW, DBW)-1.8 TDCi	03/2001	→	11/2004
FOCUS (DAW, DBW)-1.8 Turbo DI / TDDi	10/1998	→	11/2004
FOCUS Station wagon (DNW)-1.8 DI / TDDi	08/1999	→	11/2004
FOCUS Station wagon (DNW)-1.8 TDCi	03/2001	→	11/2004
FOCUS Station wagon (DNW)-1.8 Turbo DI / TDDi	02/1999	→	11/2004
FOCUS Tre volumi (DFW)-1.8 TDCi	03/2001	→	11/2004




063280008010 MSN8008 2,2kW 12V

FORD			
FOCUS Tre volumi (DFW)-1.8 Turbo DI / TDDi	02/1999	→	11/2004
MONDEO I (GBP)-1.8 TD	06/1993	→	08/1996
MONDEO I Station wagon (BNP)-1.8 TD	06/1993	→	08/1996
MONDEO I Tre volumi (GBP)-1.8 TD	06/1993	→	08/1996
MONDEO II (BAP)-1.8 TD	09/1996	→	11/2000
MONDEO II Station wagon (BNP)-1.8 TD	09/1996	→	11/2000
MONDEO II Tre volumi (BFP)-1.8 TD	09/1996	→	11/2000

063280010010 MSN8010 1,2kW 12V

FORD			
C-MAX-1.6	02/2007	→	
FIESTA Furgonato (J5_, J3_)-1.4 i	04/1996	→	10/1999
FIESTA IV (JA_, JB_)-1.25 i 16V	08/1995	→	01/2002
FIESTA IV (JA_, JB_)-1.4 i 16V	04/1996	→	01/2002
FIESTA IV (JA_, JB_)-1.6 16V Sport	02/2000	→	01/2002
FIESTA V (JH_, JD_)-1.25 16V	05/2002	→	
FIESTA V (JH_, JD_)-1.4 16V	11/2001	→	
FIESTA V (JH_, JD_)-1.6 16V	11/2001	→	
FOCUS (DAW, DBW)-1.4 16V	10/1998	→	11/2004
FOCUS (DAW, DBW)-1.6 16V	10/1998	→	11/2004
FOCUS C-MAX-1.6	10/2003	→	03/2007
FOCUS C-MAX-1.6 Ti	08/2004	→	03/2007
FOCUS II (DA_)-1.4	11/2004	→	
FOCUS II (DA_)-1.6	11/2004	→	
FOCUS II (DA_)-1.6 Ti	11/2004	→	
FOCUS II Cabriolet-1.6	10/2006	→	
FOCUS II Station wagon (DAW_)-1.4	11/2004	→	
FOCUS II Station wagon (DAW_)-1.6	11/2004	→	
FOCUS II Station wagon (DAW_)-1.6 Ti	11/2004	→	
FOCUS II Tre volumi (DA_)-1.4	04/2005	→	
FOCUS II Tre volumi (DA_)-1.6	04/2005	→	
FOCUS II Tre volumi (DA_)-1.6 Ti	04/2005	→	
FOCUS Station wagon (DNW)-1.4 16V	02/1999	→	11/2004
FOCUS Station wagon (DNW)-1.6 16V	02/1999	→	11/2004
FOCUS Tre volumi (DFW)-1.4 16V	02/1999	→	11/2004
FOCUS Tre volumi (DFW)-1.6	09/2000	→	08/2003
FOCUS Tre volumi (DFW)-1.6 16V	02/1999	→	11/2004
FUSION (JU_)-1.25	08/2004	→	
FUSION (JU_)-1.4	08/2002	→	
FUSION (JU_)-1.6	08/2002	→	
PUMA (EC_)-1.6 16V	08/2000	→	
PUMA (EC_)-1.7 16V	03/1997	→	
PUMA (EC_)-ST 160	06/1999	→	
MAZDA			
2 (DY)-1.25	04/2003	→	




063280010010 MSN8010 1,2kW 12V

MAZDA	
2 (DY)-1.4	04/2003 →
2 (DY)-1.6	04/2003 →
VOLVO	
C30-1.6	10/2006 →
S40 II (MS)-1.6	01/2005 →
V50 (MW)-1.6	01/2005 →

063280014010 MSN8014 1,4kW 12V

FORD	
ESCORT '81 Express (AVA)-1.3	03/1981 → 02/1986
ESCORT '91 Express (AVL)-1.4	07/1990 → 12/1994
ESCORT '95 Furgonato (AVL)-1.4	01/1995 →
ESCORT III (GAA)-1.1	09/1980 → 12/1985
ESCORT III (GAA)-1.3	09/1980 → 12/1985
ESCORT III (GAA)-1.6	09/1980 → 12/1985
ESCORT III (GAA)-1.6 i (GAA)	07/1985 → 12/1985
ESCORT III (GAA)-1.6 RS Turbo	11/1984 → 12/1985
ESCORT III (GAA)-1.6 XR3i	10/1982 → 12/1985
ESCORT III (GAA)-RS 1600i	05/1982 → 12/1985
ESCORT III Cabriolet (ALD)-1.3	09/1983 → 12/1985
ESCORT III Cabriolet (ALD)-1.6	09/1983 → 12/1985
ESCORT III Cabriolet (ALD)-1.6 i	09/1983 → 12/1985
ESCORT III Station wagon (AWA)-1.3	03/1981 → 12/1985
ESCORT III Station wagon (AWA)-1.6	09/1980 → 12/1985
ESCORT IV (GAF, AWF, ABFT)-1.1	12/1985 → 07/1990
ESCORT IV (GAF, AWF, ABFT)-1.4	10/1985 → 10/1990
ESCORT IV (GAF, AWF, ABFT)-1.6	04/1989 → 07/1990
ESCORT V (GAL)-1.4	07/1990 → 09/1992
ESCORT V (GAL)-1.6	07/1990 → 12/1992
ESCORT V (GAL)-1.8 16V XR3i	02/1992 → 12/1992
ESCORT V Cabriolet (ALL)-1.4	07/1990 → 12/1992
ESCORT V Cabriolet (ALL)-1.6	07/1990 → 12/1992
ESCORT V Station wagon (GAL, AVL)-1.4	07/1990 → 09/1992
ESCORT V Station wagon (GAL, AVL)-1.6	07/1990 → 09/1992
ESCORT VI (GAL)-1.4	09/1992 → 01/1995
ESCORT VI Cabriolet (ALL)-1.4	12/1992 → 04/1994
ESCORT VI Cabriolet (ALL)-1.4 i	07/1993 → 01/1995
ESCORT VI Station wagon (GAL)-1.4	09/1992 → 01/1995
ESCORT VI Tre volumi (GAL)-1.4	08/1993 → 01/1995
ESCORT VII (GAL, AAL, ABL)-1.4	01/1995 → 10/1998
ESCORT VII Cabriolet (ALL)-1.4	02/1995 → 08/1998
ESCORT VII Station wagon (GAL, ANL)-1.4	01/1995 → 02/1999
ESCORT VII Tre volumi (GAL, AFL)-1.4	01/1995 → 02/1999
FIESTA Furgonato (FVD)-1.4	09/1986 → 09/1989
FIESTA II (FBD)-1.0 (FBD)	09/1983 → 02/1989

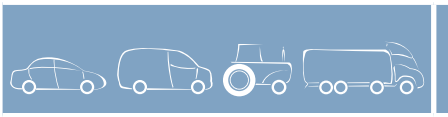


063280014010 MSN8014 1,4kW 12V

FORD	
FIESTA II (FBD)-1.1 (FBD)	05/1986 → 02/1989
FIESTA II (FBD)-1.3 (FBD)	09/1983 → 01/1987
FIESTA II (FBD)-1.4	09/1983 → 01/1987
FIESTA II (FBD)-1.4 (FBD)	10/1985 → 11/1989
FIESTA II (FBD)-1.6	01/1985 → 11/1989
FIESTA II (FBD)-1.6 XR2 (FBD)	03/1984 → 02/1989
FIESTA III (GFJ)-1.1	03/1989 → 12/1995
FIESTA III (GFJ)-1.4	03/1989 → 12/1995
FIESTA III (GFJ)-1.6	01/1989 → 01/1994
FIESTA III (GFJ)-1.6 XR2i	03/1989 → 01/1994
FIESTA III (GFJ)-1.8 16V	02/1992 → 12/1995
ORION I (AFD)-1.3	07/1983 → 03/1986
ORION I (AFD)-1.6	07/1983 → 03/1986
ORION I (AFD)-1.6 i	07/1983 → 03/1986
ORION III (GAL)-1.4	07/1990 → 12/1993
ORION III (GAL)-1.6	07/1990 → 12/1992
ORION III (GAL)-1.6 i	07/1990 → 09/1992
MAZDA	
323 F IV (BG)-1.8 16V	09/1989 → 03/1993

063280020010 MSN8020 3,0kW 12V

FORD	
TRANSIT Autobus (72E, 73E)-2.3 D FT 100 (72E2X)	11/1971 → 09/1978
TRANSIT Autobus (E_ _)-2.5 DI (EBL, ECL, EDS, EDL)	07/1994 → 03/2000
TRANSIT Autobus (E_ _)-2.5 DI (EBS, EDS, EDL, ESS, EUS)	08/1991 → 07/1994
TRANSIT Autobus (E_ _)-2.5 TD (EB_, ED_, ES_)	08/1994 → 06/2000
TRANSIT Autobus (E_ _)-2.5 TD (EBS, EBL, ECL, EDS, EDL, ESS, EUS)	10/1992 → 03/2000
TRANSIT Autobus (T_ _)-2.5 D (TBS, TCL, TCS, TEL, TES)	12/1985 → 09/1992
TRANSIT Autobus (V_ _)-2.4 D (VAS, VBL, VIL, VUL, VZS)	12/1977 → 10/1986
TRANSIT Autobus (V_ _)-2.5 D (VAS, VBL, VIL, VUL, VZS)	10/1983 → 10/1986
TRANSIT Furgonato (E_ _)-2.5 DI (EAL, EAS)	06/1994 → 03/2000
TRANSIT Furgonato (E_ _)-2.5 TD (EAL, EAS)	06/1994 → 03/2000
TRANSIT Furgonato (E_ _)-2.5 TDI (EAL, EAS)	06/1994 → 03/2000




063280020010 MSN8020 3,0kW 12V

FORD	
TRANSIT Furgonato (T_ _)-2.5 D (TAL, TAS, TGL, TWS)	01/1986 → 09/1991
TRANSIT Furgonato (V_ _)-2.4 D (VVS)	11/1977 → 10/1986
TRANSIT Furgonato (V_ _)-2.5 D (VVL)	10/1983 → 10/1986
TRANSIT Pianale piatto/Telaio (E_ _)-2.5 DI (EME/L/S, ENE/L/S)	08/1994 → 03/2000
TRANSIT Pianale piatto/Telaio (E_ _)-2.5 TD (EME/L/S, ENE/L/S)	08/1994 → 03/2000
TRANSIT Pianale piatto/Telaio (T_ _)-2.5 D (TTL, TTS, TUL, TUS, TTE) Cat.	01/1986 → 01/1989
TRANSIT Pianale piatto/Telaio (T_ _)-2.5 DI (TTE, TTL, TTS, TUL)	09/1988 → 09/1992
TRANSIT Pianale piatto/Telaio (V_ _)-2.4 D (VGL, VSL, VTL, VCS, VDS)	11/1977 → 09/1985
TRANSIT Pianale piatto/Telaio (V_ _)-2.5 D (VGL, VSL, VTL, VCS, VDS)	10/1983 → 10/1986
TRANSIT TOURNEO-2.5 DI	11/1994 → 12/2000
TRANSIT TOURNEO-2.5 TD	11/1994 → 12/2000
LDV	
CONVOY Furgonato-2.5 TDI	10/1998 →

063280021010 MSN8021 1,4kW 12V

FORD	
FIESTA V (JH_, JD_)-1.4 TDCi	11/2001 →
FIESTA V (JH_, JD_)-1.6 TDCi	11/2004 →
FIESTA Van-1.4 TDCi	10/2003 →
FUSION (JU_)-1.4 TDCi	08/2002 →
FUSION (JU_)-1.6 TDCi	11/2004 →

063280022010 MSN8022 1,4kW 12V

FORD	
MONDEO III (B5Y)-2.0 16V DI / TDDi / TDCi	11/2000 → 08/2007
MONDEO III (B5Y)-2.0 16V TDDi / TDCi	11/2000 → 08/2007
MONDEO III (B5Y)-2.0 TDCi	10/2001 → 08/2007
MONDEO III (B5Y)-2.2 TDCi	09/2004 → 08/2007
MONDEO III Station wagon (BWY)-2.0 16V DI / TDDi / TDCi	11/2000 → 08/2007
MONDEO III Station wagon (BWY)-2.0 16V TDDi / TDCi	11/2000 → 08/2007
MONDEO III Station wagon (BWY)-2.0 TDCi	10/2001 → 08/2007
MONDEO III Station wagon (BWY)-2.2 TDCi	09/2004 → 08/2007
MONDEO III Tre volumi (B4Y)-2.0 16V DI / TDDi / TDCi	11/2000 → 08/2007
MONDEO III Tre volumi (B4Y)-2.0 16V TDDi / TDCi	11/2000 → 08/2007




063280022010 MSN8022 1,9kW 12V

FORD	
MONDEO III Tre volumi (B4Y)-2.0 TDCi	10/2001 → 08/2007
MONDEO III Tre volumi (B4Y)-2.2 TDCi	09/2004 → 08/2007
TRANSIT Autobus-2.4 TDCi	07/2006 →
TRANSIT Autobus (FD_ _, FB_ _, FS_ _, FZ_ _, FC_ _)-2.0 DI (F_E_, F_F_, F_G_)	08/2000 → 05/2006
TRANSIT Autobus (FD_ _, FB_ _, FS_ _, FZ_ _, FC_ _)-2.0 TDCi (F_F_, F_E_, F_G_)	08/2002 → 05/2006
TRANSIT Autobus (FD_ _, FB_ _, FS_ _, FZ_ _, FC_ _)-2.4 DI (F_B_, F_C_, F_A_)	01/2000 → 05/2006
TRANSIT Autobus (FD_ _, FB_ _, FS_ _, FZ_ _, FC_ _)-2.4 DI (RWD) (F_B_, F_C_)	01/2000 → 05/2006
TRANSIT Autobus (FD_ _, FB_ _, FS_ _, FZ_ _, FC_ _)-2.4 TD	08/2000 → 08/2003
TRANSIT Autobus (FD_ _, FB_ _, FS_ _, FZ_ _, FC_ _)-2.4 TDCi	03/2004 → 05/2006
TRANSIT Autobus (FD_ _, FB_ _, FS_ _, FZ_ _, FC_ _)-2.4 TDdi	08/2000 → 03/2006
TRANSIT Autobus (FD_ _, FB_ _, FS_ _, FZ_ _, FC_ _)-2.4 TDE	03/2004 → 05/2006
TRANSIT Autobus (FD_ _, FB_ _, FS_ _, FZ_ _, FC_ _)-2.4 TDE (F_C_, F_B_, F_A_)	07/2001 → 05/2006
TRANSIT Furgonato (FA_ _)-2.0 DI (FAE_, FAF_, FAG_)	08/2000 → 05/2006
TRANSIT Furgonato (FA_ _)-2.0 TDCi	08/2002 → 05/2006
TRANSIT Furgonato (FA_ _)-2.4 DI (FAA_, FAB_, FAC_, FAD_)	01/2000 → 05/2006
TRANSIT Furgonato (FA_ _)-2.4 TD	08/2000 → 08/2003
TRANSIT Furgonato (FA_ _)-2.4 TDCi	03/2004 → 05/2006
TRANSIT Furgonato (FA_ _)-2.4 TDdi	08/2000 → 03/2006
TRANSIT Furgonato (FA_ _)-2.4 TDE	07/2001 → 05/2006
TRANSIT Pianale piatto/Telaio-2.4 TDCi	07/2006 →
TRANSIT Pianale piatto/Telaio (FM_ _, FN_ _)-2.0 DI (F_E_, F_F_)	08/2000 → 05/2006
TRANSIT Pianale piatto/Telaio (FM_ _, FN_ _)-2.0 TDCi (F_E_, F_F_)	08/2002 → 05/2006
TRANSIT Pianale piatto/Telaio (FM_ _, FN_ _)-2.4 DI (F_A_, F_B_, F_C_, F_D_)	01/2000 → 05/2006
TRANSIT Pianale piatto/Telaio (FM_ _, FN_ _)-2.4 TDCi	03/2004 → 05/2006
TRANSIT Pianale piatto/Telaio (FM_ _, FN_ _)-2.4 TDdi	08/2000 → 08/2003
TRANSIT Pianale piatto/Telaio (FM_ _, FN_ _)-2.4 TDE	07/2001 → 05/2006

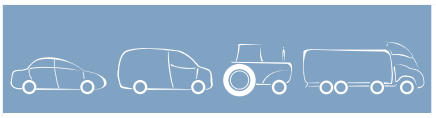


063280022010 MSN8022 1,9kW 12V

JAGUAR		
X-TYPE (CF1)-2.2 D	10/2005 →	
X-TYPE Estate-2.2 D	10/2005 →	

063280023010 MSN8023 1,4kW 12V

FORD		
MONDEO III (B5Y)-1.8 16V	11/2000 →	08/2007
MONDEO III (B5Y)-1.8 SCi	06/2003 →	08/2007
MONDEO III (B5Y)-2.0 16V	11/2000 →	08/2007
MONDEO III Station wagon (BWY)-1.8 16V	11/2000 →	08/2007
MONDEO III Station wagon (BWY)-1.8 SCi	06/2003 →	08/2007
MONDEO III Station wagon (BWY)-2.0 16V	11/2000 →	08/2007
MONDEO III Tre volumi (B4Y)-1.8 16V	11/2000 →	08/2007
MONDEO III Tre volumi (B4Y)-1.8 SCi	06/2003 →	08/2007
MONDEO III Tre volumi (B4Y)-2.0 16V	11/2000 →	08/2007

063280027010 MSN8027 1,2kW 12V

FORD		
C-MAX-2.0	02/2007 →	
FOCUS C-MAX-1.8	10/2003 →	03/2007
FOCUS C-MAX-2.0	04/2004 →	03/2007
FOCUS II (DA_)-2.0	11/2004 →	
FOCUS II Station wagon (DAW_)-2.0	11/2004 →	
FOCUS II Tre volumi (DA_)-2.0	04/2005 →	
TRANSIT Furgonato-2.3 16V	07/2006 →	
TRANSIT Pianale piatto/Telaio (FM_ _, FN_ _)-2.3	03/2001 →	03/2006
TRANSIT Pianale piatto/Telaio (FM_ _, FN_ _)-2.3 16V (F_A_, F_B_, F_C_, F_D_)	04/2001 →	05/2006
VOLVO		
C30-1.8	10/2006 →	
C30-1.8 FlexFuel	01/2007 →	
C30-2.0	10/2006 →	
S40 II (MS)-1.8	04/2004 →	
S40 II (MS)-1.8 FlexFuel	01/2006 →	

063280028010 MSN8028 1,2KW 12V

FORD		
C-MAX-1.8	02/2007 →	
C-MAX-1.8 Flexifuel	02/2007 →	
FOCUS C-MAX-1.8	10/2003 →	03/2007
FOCUS C-MAX-1.8 Flexifuel	01/2006 →	03/2007
FOCUS II (DA_)-1.8 Flexifuel	01/2006 →	
FOCUS II Station wagon (DAW_)-1.8 Flexifuel	01/2006 →	
FOCUS II Tre volumi (DA_)-1.8 Flexifuel	06/2006 →	

063280029010 MSN8029 1,2KW 12V

FORD		
C-MAX-1.6 TDCi	02/2007 →	→

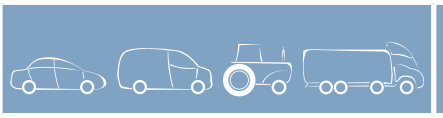


063280029010 MSN8029 1,2KW 12V

FORD		
FOCUS C-MAX-1.6 TDCi	10/2003 →	03/2007
FOCUS II (DA_)-1.6 TDCi	11/2004 →	
FOCUS II Station wagon (DAW_)-1.6 TDCi	11/2004 →	
FOCUS II Tre volumi (DA_)-1.6 TDCi	04/2005 →	
MAZDA		
3 (BK)-1.6 DI Turbo	06/2004 →	
3 Tre volumi (BK)-1.6 DI Turbo	06/2004 →	
VOLVO		
C30-1.6 D	10/2006 →	
S40 II (MS)-1.6 D	01/2005 →	
V50 (MW)-1.6 D	01/2005 →	

063280031010 MSN8031 2,2kW 12V

FORD		
MONDEO III (B5Y)-2.5 V6 24V	11/2000 →	08/2007
MONDEO III (B5Y)-3.0 V6 24V	09/2004 →	08/2007
MONDEO III (B5Y)-ST220	04/2002 →	08/2007
MONDEO III Station wagon (BWY)-2.5 V6 24V	11/2000 →	08/2007
MONDEO III Station wagon (BWY)-3.0 V6 24V	09/2004 →	08/2007
MONDEO III Station wagon (BWY)-ST220	04/2002 →	08/2007
MONDEO III Tre volumi (B4Y)-2.5 V6 24V	11/2000 →	08/2007
MONDEO III Tre volumi (B4Y)-3.0 V6 24V	09/2004 →	08/2007
MONDEO III Tre volumi (B4Y)-ST220	04/2002 →	08/2007

063280032010 MSN8032 1,4kW 12V

FORD		
COUGAR (EC_)-2.5 V6 24V	08/1998 →	12/2001
MAVERICK-3.0 V6 24V	02/2001 →	
MONDEO I (GBP)-2.5 i 24V	07/1994 →	08/1996
MONDEO I Station wagon (BNP)-2.5 i 24V	07/1994 →	08/1996
MONDEO I Tre volumi (GBP)-2.5 i 24V	07/1994 →	08/1996
MONDEO II (BAP)-2.5 24V	09/1996 →	11/2000
MONDEO II Station wagon (BNP)-2.5 24V	09/1996 →	11/2000
MONDEO II Tre volumi (BFP)-2.5 24V	09/1996 →	11/2000
MONDEO III (B5Y)-2.5 V6 24V	11/2000 →	08/2007
MONDEO III (B5Y)-ST220	04/2002 →	08/2007
MONDEO III Station wagon (BWY)-2.5 V6 24V	11/2000 →	08/2007
MONDEO III Station wagon (BWY)-ST220	04/2002 →	08/2007
MONDEO III Tre volumi (B4Y)-2.5 V6 24V	11/2000 →	08/2007
MONDEO III Tre volumi (B4Y)-ST220	04/2002 →	08/2007
MAZDA		
TRIBUTE (EP)-3.0 V6 24V 4WD	03/2000 →	

063280034010 MSN8034 1,4kW 12V

FORD		
TOURNEO CONNECT-1.8 Di	06/2002 →	




063280034010 MSN8034 1,4kW 12V

FORD	
TOURNEO CONNECT-1.8 TDCi	08/2006 →
TOURNEO CONNECT-1.8 Turbo Di	06/2002 →
TRANSIT CONNECT (P65_, P70_, P80_)-1.8 Di	06/2002 →
TRANSIT CONNECT (P65_, P70_, P80_)-1.8 TDCi	06/2002 →

063280036010 MSN8036 2,2kW 12V

FORD	
C-MAX-2.0 TDCi	02/2007 →
FOCUS C-MAX-2.0 TDCi	10/2003 → 03/2007
FOCUS II (DA_)-2.0 TDCi	11/2004 →
FOCUS II Cabriolet-2.0 TDCi	10/2006 →
FOCUS II Station wagon (DAW_)-2.0 TDCi	11/2004 →
FOCUS II Tre volumi (DA_)-2.0 TDCi	04/2005 →
GALAXY-2.0 TDCi	05/2006 →
KUGA-2.0 TDCi	03/2008 →
MONDEO IV-2.0 TDCi	03/2007 →
MONDEO IV Tre volumi-2.0 TDCi	03/2007 →
MONDEO IV Turnier-2.0 TDCi	03/2007 →
S-MAX-2.0 TDCi	05/2006 →
VOLVO	
C30-2.0 D	10/2006 →
C70 II Cabriolet-2.0 D	01/2008 →
S40 II (MS)-2.0 D	01/2004 →
V50 (MW)-2.0 D	04/2004 →
V70 III Station wagon-2.0 D	10/2007 →

063280045010 MSN8045 1,3kW 12V

ALFA ROMEO	
MITO (955)-1.3 JTDM	12/2008 →
FIAT	
500-1.3 D Multijet	10/2007 →
500 C-1.3 D Multijet	09/2009 →
DOBLO (119)-1.3 D Multijet	10/2005 →
DOBLO Cargo (223)-1.3 JTD 16V	05/2004 → 12/2005
DOBLO Cargo (223)-1.9 JTD	01/2004 → 08/2005
FIORINO Cassone / Furgonato / Promi-scuo-1.3 D Multijet	02/2008 →
IDEA-1.3 D Multijet	10/2005 →
IDEA-1.3 JTD	01/2004 →
LINEA-1.3 D Multijet	07/2007 →
PALIO (178BX)-1.3 JTD Multijet	06/2003 →
PANDA (169)-1.3 D Multijet	09/2003 → 09/2009
PANDA (169)-1.3 D Multijet 4x4	10/2004 →
PANDA Van (141_)-1.3 JTD	03/2004 →




063280045010 MSN8045 1,3kW 12V

FIAT	
PUNTO (188)-1.3 JTD 16V	06/2003 →
PUNTO / GRANDE PUNTO (199)-1.3 D Multijet	10/2005 → 07/2010
PUNTO Van (188AX)-1.3 JTD	07/2003 → 10/2005
QUBO-1.3 D Multijet	09/2008 →
SIENA (178_)-1.3 JTD	09/2003 →
LANCIA	
MUSA (350)-1.3 D Multijet	10/2004 → 09/2007
YPSILON (843)-1.3 D Multijet	09/2006 →
YPSILON (843)-1.3 JTD	10/2003 →
OPEL	
ASTRA H Tre volumi-1.3 CDTi	02/2007 →
COMBO Cassone / Furgonato / Promiscuo-1.3 CDTI 16V	10/2005 →
COMBO Tour-1.3 CDTI 16V	10/2005 →
CORSA D-1.3 CDTI	07/2006 →
VAUXHALL	
ASTRA Mk V (H) Sport Hatch-1.3 CDTi	04/2005 →
ASTRAVAN Mk V (H)-1.3 CDTi	08/2005 →

063280048010 MSN8048 1,3kW 12V

TOYOTA	
AVENSIS (T25)-1.6 VVT-i	04/2003 → 10/2008
AVENSIS (T25)-1.8	04/2003 → 10/2008
AVENSIS Liftback (_T22_)-1.6 VVT-i	01/2003 → 02/2003
AVENSIS Liftback (_T22_)-1.8 VVT-i	01/2003 → 02/2003
AVENSIS Station Wagon (_T22_)-1.6 VVT-i	01/2003 → 02/2003
AVENSIS Station Wagon (_T22_)-1.8 VVT-i	01/2003 → 02/2003
AVENSIS Station wagon (T25)-1.6 VVT-i	04/2003 → 12/2006
AVENSIS Station wagon (T25)-1.8	04/2003 → 10/2008
AVENSIS Tre volumi (T25)-1.6 VVT-i	04/2003 → 10/2008
AVENSIS Tre volumi (T25)-1.8	04/2003 → 10/2008

063280049010 MSN8049 1,0kW 12V

TOYOTA	
AVENSIS (_T22_)-1.8 VVT-i	10/2000 → 02/2003
AVENSIS Liftback (_T22_)-1.6 VVT-i	10/2000 → 02/2003
AVENSIS Liftback (_T22_)-1.8 VVT-i	10/2000 → 02/2003
AVENSIS Station Wagon (_T22_)-1.6 VVT-i	10/2000 → 02/2003
AVENSIS Station Wagon (_T22_)-1.8 VVT-i	10/2000 → 02/2003
CELICA (ZZT23_)-1.8 16V TS (ZZT231_)	08/2000 → 09/2005
CELICA (ZZT23_)-1.8 16V VT-i (ZZT230_)	11/1999 → 09/2005
COROLLA (_E12U_, _E12J_)-1.4 VVT-i	01/2002 → 02/2007
COROLLA (_E12U_, _E12J_)-1.6 VVT-i	01/2002 → 02/2007
COROLLA Compact (_E11_)-1.4 (ZZE111_)	02/2000 → 01/2002




063280049010 MSN8049 1,0kW 12V	
TOYOTA	
COROLLA Compact (_E11_)-1.6 (ZZE112_)	02/2000 → 01/2002
COROLLA Liftback (_E11_)-1.4 (ZZE111_)	02/2000 → 01/2002
COROLLA Liftback (_E11_)-1.6 (ZZE112_)	02/2000 → 01/2002
COROLLA Tre volumi (_E12J_, _E12T_)-1.4 VVT-i	08/2002 → 10/2007
COROLLA Verso (_E12J_)-1.6 VVT-i	01/2002 → 01/2004
COROLLA Verso (_E12J_)-1.8 VVT-i	01/2002 → 01/2004
COROLLA Wagon (__E11_)-1.4 16V (ZZE111_)	02/2000 → 01/2002
COROLLA Wagon (__E11_)-1.6 16V (ZZE112_)	02/2000 → 01/2002
MR 2 III (_W3_)-1.8 16V VT-i (ZZW30)	04/2000 → 09/2005
RAV 4 II (XA2)-1.8 VVTi	02/2001 → 10/2005
063280050010 MSN8050 1,2kW 12V	
TOYOTA	
AVENSIS (_T22_)-2.0 VVT-i	10/2000 → 02/2003
AVENSIS Liftback (_T22_)-2.0 VVT-i	10/2000 → 02/2003
AVENSIS Station Wagon (_T22_)-2.0 VVT-i	10/2000 → 02/2003
063280051010 MSN8051 1,2kW 12V	
TOYOTA	
AVENSIS (_T22_)-2.0 (ST220_)	09/1997 → 06/2000
AVENSIS Liftback (_T22_)-2.0 (ST220_)	09/1997 → 06/2000
AVENSIS Station Wagon (_T22_)-2.0 (ST220_)	09/1997 → 06/2000
CARINA E (_T19_)-2.0 GLI (ST191)	04/1992 → 09/1997
CARINA E (_T19_)-2.0 GTi (ST191)	04/1992 → 02/1994
CARINA E (_T19_)-2.0 GTi 16V (ST191_)	07/1995 → 09/1997
CARINA E (_T19_)-2.0 i (ST191)	11/1994 → 09/1997
CARINA E Sportswagon (_T19_)-2.0 GLI (ST191_)	01/1993 → 09/1997
CARINA E Sportswagon (_T19_)-2.0 i (ST191_)	05/1995 → 09/1997
CARINA E Tre volumi (_T19_)-2.0 (ST191)	01/1993 → 09/1997
CARINA E Tre volumi (_T19_)-2.0 GTi (ST191_)	04/1992 → 02/1994
CARINA E Tre volumi (_T19_)-2.0 GTi 16V (ST191_)	03/1994 → 09/1997
CARINA E Tre volumi (_T19_)-2.0 i (ST191)	11/1994 → 09/1997
PICNIC (_XM10)-2.0	01/2001 → 12/2001
PICNIC (_XM10)-2.0 16V (SXM10_)	05/1996 → 05/2000
RAV 4 I (SXA1_)-2.0 16V	11/1995 → 06/2000

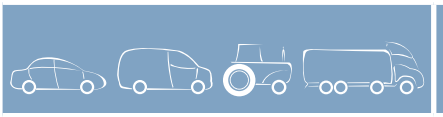


063280052010 MSN8052 2,2kW 12V	
TOYOTA	
AVENSIS VERSO (_ACM2_)-2.0 D-4D	08/2001 → 07/2005
COROLLA (_E12U_, _E12J_)-2.0 D-4D	05/2003 → 02/2007
COROLLA Verso (_E12J_)-2.0 D-4D	01/2002 → 05/2004
PICNIC (_XM10)-2.2 D (CMX10_)	08/1997 → 04/2001
PREVIA (CLR3_, ACR3_)-2.0 D-4D	03/2001 → 12/2005
RAV 4 II (XA2)-2.0 D-4D 4WD	09/2001 → 10/2005
063280053010 MSN8053 1,4kW 12V	
TOYOTA	
AVENSIS VERSO (_ACM2_)-2.0 VVT-i	08/2001 → 07/2005
CAMRY (_V20)-2.2 (SXV20_)	08/1996 → 11/2001
CAMRY (_V20)-3.0 24V (MCV20_)	03/1997 → 07/2001
CAMRY (_V30)-3.0 V6	11/2001 → 02/2006
PREVIA (CLR3_, ACR3_)-2.4 16V	08/2000 → 12/2005
RAV 4 II (XA2)-2.0 VVTi 4WD	06/2000 → 10/2005
063280054010 MSN8054 1,0kW 12V	
TOYOTA	
YARIS (_P1_)-1.0 16V	03/2003 → 08/2005
YARIS (_P1_)-1.0 16V (SCP10_)	04/1999 → 03/2003
YARIS (_P1_)-1.3	04/2002 → 08/2005
063280055010 MSN8055 1,0kW 12V	
TOYOTA	
YARIS (_P1_)-1.3 16V (NCP10_)	11/1999 → 10/2004
YARIS (_P1_)-1.5 TS (NCP13)	01/2003 → 08/2006
YARIS (_P1_)-1.5 VVT-i TS	04/2001 → 03/2003
YARIS VERSO (NC/LP2_)-1.3 (NCP22)	11/1999 → 09/2005
YARIS VERSO (NC/LP2_)-1.5 (NCP21)	03/2000 → 09/2005
063280056010 MSN8056 1,4kW 12V	
TOYOTA	
YARIS (_P1_)-1.3 16V (NCP10_)	11/1999 → 10/2004
YARIS VERSO (NC/LP2_)-1.3 (NCP22)	11/1999 → 09/2005
063280057010 MSN8057 1,6kW 12V	
TOYOTA	
YARIS (_P1_)-1.3 16V (NCP10_)	11/1999 → 10/2004
YARIS VERSO (NC/LP2_)-1.3 (NCP22)	11/1999 → 09/2005
063280058010 MSN8058 2,0kW 12V	
TOYOTA	
YARIS (_P1_)-1.4 D-4D	12/2001 → 08/2005
YARIS VERSO (NC/LP2_)-1.4 D-4D (NLP22)	12/2001 → 09/2005
063280059010 MSN8059 2,0kW 12V	
LEXUS	
IS II (_XE2_, _SE2_)-220 d (ALE20)	10/2005 →
TOYOTA	
AURIS (_ZE15_, _RE15_)-2.0 D-4D	03/2007 →




063280059010 MSN8059 2,0kW 12V

TOYOTA	
AURIS (_ZE15_, _RE15_)-2.2 D	03/2007 →
AVENSIS (T25)-2.0 D-4D	03/2006 →
AVENSIS (T25)-2.2 D-4D	10/2005 →
AVENSIS (T25)-2.2 D-CAT	07/2005 →
AVENSIS Station wagon (T25)-2.0 D-4D	03/2006 →
AVENSIS Station wagon (T25)-2.2 D-4D	10/2005 →
AVENSIS Station wagon (T25)-2.2 D-CAT	07/2005 →
AVENSIS Station wagon (T27)-2.0 D-4D	02/2009 →
AVENSIS Station wagon (T27)-2.2 D-4D	02/2009 →
AVENSIS Tre volumi (T25)-2.0 D-4D	03/2006 →
AVENSIS Tre volumi (T25)-2.2 D-4D	10/2005 →
AVENSIS Tre volumi (T25)-2.2 D-CAT	07/2005 →
COROLLA (_E11_)-2.2 D4d	11/2006 →
COROLLA (_E12U_, _E12J_)-2.2 D4d	11/2006 →
COROLLA Tre volumi (_E12J_, _E12T_)-2.2 D4d	11/2006 →
COROLLA Verso (ZER_, ZZE_, R1_)-2.2 D-4D	10/2005 →
RAV 4 III (ACA_, ACE_, ALA_, GSA3_)-2.2 D-4D	03/2006 →
RAV 4 III (ACA_, ACE_, ALA_, GSA3_)-2.2 D-CAT	03/2006 →

063280060010 MSN8060 1,0kW 12V

ALFA ROMEO	
GIULIETTA (940)-1.4 TB	04/2010 →
GIULIETTA (940)-1.8 TBi	04/2010 →
MITO (955)-1.4	09/2008 →
FIAT	
500-1.2	10/2007 →
500-1.4	10/2007 →
500-1.4 Abarth	08/2008 →
BRAVO II (198)-1.4	04/2007 →
BRAVO II (198)-1.4 16V	03/2008 →
BRAVO II (198)-1.4 T-Jet	09/2007 →
DOBLO (152)-1.4	02/2010 →
IDEA-1.2 16V	11/2010 →
LINEA-1.4	11/2010 →
LINEA-1.4 T-Jet	11/2010 →
PALIO (178BX)-1.4	04/2005 →
PANDA (169)-1.1	09/2003 →
PANDA (169)-1.2	03/2010 →
PUNTO / GRANDE PUNTO (199)-1.2	10/2005 →
PUNTO / GRANDE PUNTO (199)-1.4	10/2005 →




063280060010 MSN8060 1,0kW 12V

FIAT	
PUNTO / GRANDE PUNTO (199)-1.4 16V	10/2005 →
PUNTO / GRANDE PUNTO (199)-1.4 Abarth	12/2007 →
PUNTO / GRANDE PUNTO (199)-1.4 T-Jet	09/2007 →
PUNTO EVO-1.2	10/2009 →
PUNTO EVO-1.4	07/2009 →
PUNTO EVO-1.4 16V	10/2009 →
PUNTO EVO-1.4 Abarth	10/2009 →
LANCIA	
DELTA III (844)-1.4	09/2008 →
DELTA III (844)-1.4 16V	07/2010 →
MUSA (350)-1.4	10/2004 →
YPSILON (843)-1.2	10/2003 →
YPSILON (846)-1.2	05/2011 →

063280061010 MSN8061 1,0Kw 12V

FIAT	
500-1.2 LPG	12/2010 →
BRAVO II (198)-1.4 LPG	11/2009 →
IDEA-1.4 LPG	03/2009 →
PANDA (169)-1.2 LPG	11/2010 →
PANDA (169)-1.4 Bi-Power / Natural Power	09/2010 →
PUNTO / GRANDE PUNTO (199)-1.4 LPG	12/2008 →
PUNTO / GRANDE PUNTO (199)-1.4 Natural Power	07/2008 →
PUNTO EVO-1.4 Natural Power	10/2009 →
LANCIA	
MUSA (350)-1.4 LPG	11/2010 →
YPSILON (843)-1.4 LPG	11/2010 →
YPSILON (846)-1.2 Bifuel	05/2011 →

063280062010 MSN8062 1,0kW 12V

FIAT	
PUNTO (188)-1.2 16V 80 (188.233, .235, .253, .255, .333, .353, .639, .63	07/2005 →
PUNTO (188)-1.2 60 (188.030, .050, .130, .150, .230, .250)	07/2005 →
PUNTO (188)-1.2 Natural Power	09/2003 →
SEICENTO (187)-1.1 (187AXB, 187AXB1A)	03/2010 →

063280071010 MSN8071 2,2kW 12V

BMW	
3 (E46)-330 d	03/2003 → 02/2005
3 (E46)-330 xd	03/2003 → 02/2005
3 Cabriolet (E46)-330 Cd	08/2005 → 08/2006
3 Coupe (E46)-330 Cd	03/2003 → 05/2006
3 Touring (E46)-330 d	03/2003 → 02/2005




063280071010 MSN8071 2,2kW 12V

BMW		
3 Touring (E46)-330 xd	03/2003 →	02/2005
5 (E60)-525d	06/2004 →	03/2007
5 (E60)-530d	07/2003 →	09/2005
5 (E60)-535d	09/2004 →	03/2007
5 Touring (E61)-525d	06/2004 →	03/2007
5 Touring (E61)-530d	06/2004 →	09/2005
5 Touring (E61)-535d	09/2004 →	03/2007
7 (E65, E66)-730 d	10/2002 →	03/2005
X3 (E83)-3.0 d	01/2004 →	09/2005
X5 (E53)-3.0 d	12/2003 →	10/2006

063280090010 MSN8090 2,0kW 12V

CITROEN		
C4 (LC_)-2.0 HDi	11/2004 →	
C4 Coupe (LA_)-2.0 HDi	11/2004 →	
C4 Grand Picasso (UA_)-2.0 HDi	10/2006 →	
C4 Picasso (UD_)-2.0 HDi	02/2007 →	
C5 (DC_)-2.0 HDi	03/2001 →	08/2004
C5 (DC_)-2.0 Hdi	03/2001 →	08/2004
C5 (DC_)-2.2 HDi (DC4HXB, DC4HXE)	03/2001 →	08/2004
C5 (RC_)-2.0 HDi (RCRHRH)	09/2004 →	
C5 (RC_)-2.2 HDi	09/2004 →	
C5 (RD_)-2.0 HDi	02/2008 →	
C5 (RD_)-2.0 HDi	04/2009 →	
C5 Break (DE_)-2.0 HDi	06/2001 →	08/2004
C5 Break (DE_)-2.2 HDi (DE4HXB, DE4HXE)	06/2001 →	08/2004
C5 Break (RE_)-2.0 HDi (RERHRH)	09/2004 →	
C5 Break (RE_)-2.2 HDi	09/2004 →	
C5 Break (TD_)-2.0 HDi	02/2008 →	
C8 (EA_, EB_)-2.0 HDi	01/2004 →	
C8 (EA_, EB_)-2.2 HDi	07/2002 →	
JUMPER Autobus (244, Z_)-2.2 HDi	04/2002 →	
JUMPER Furgonato (244)-2.2 HDi	04/2002 →	
JUMPER Pianale piatto/Telaio (244)-2.2 HDi	02/2002 →	06/2006
JUMPER Pianale piatto/Telaio (244)-2.2 HDi 16V	04/2002 →	
JUMPY-2.0 HDi	01/2007 →	
JUMPY Furgonato-2.0 HDi	01/2007 →	
XM (Y4)-2.5 TD	05/1994 →	10/2000
XM Break (Y4)-2.5 TD	05/1994 →	10/2000

FIAT		
SCUDO (270_)-2.0 D Multijet	01/2007 →	
SCUDO Furgonato (270_)-2.0 D Multijet	01/2007 →	
SCUDO Pianale piatto/Telaio (270_)-2.0 D Multijet	01/2007 →	
ULYSSE (179AX)-2.0 D Multijet	05/2006 →	
ULYSSE (179AX)-2.0 JTD	08/2002 →	

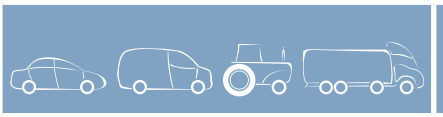


063280090010 MSN8090 2,0kW 12V

FIAT		
ULYSSE (179AX)-2.2 JTD	08/2002 →	

LANCIA		
PHEDRA (179)-2.0 D Multijet	07/2006 →	
PHEDRA (179)-2.0 JTD	09/2002 →	
PHEDRA (179)-2.2 JTD (179AXC1A)	09/2002 →	

PEUGEOT		
307 (3A/C)-2.0 HDi	10/2003 →	
307 Break (3E)-2.0 HDI	01/2004 →	
307 CC (3B)-2.0 HDi 135	06/2005 →	
307 SW (3H)-2.0 HDI	01/2004 →	
406 Coupe (8C)-2.2 HDI	03/2000 →	12/2004
407 (6D_)-2.0 HDi 135	05/2004 →	
407 SW (6E_)-2.0 HDi 135	05/2004 →	
605 (6B)-2.5 Turbo Diesel	07/1994 →	09/1999
607 (9D, 9U)-2.0 HDI	01/2004 →	
607 (9D, 9U)-2.2 HDI	02/2000 →	11/2004
807 (E)-2.0 HDi	01/2004 →	
807 (E)-2.2 HDi	06/2002 →	
BOXER Autobus (244, Z_)-2.0 HDi	04/2002 →	
BOXER Autobus (244, Z_)-2.2 HDi	04/2002 →	
BOXER Furgonato (244)-2.0 HDi	04/2002 →	
BOXER Furgonato (244)-2.2 HDi	04/2002 →	
BOXER Pianale piatto/Telaio (244)-2.0 HDi	04/2002 →	
BOXER Pianale piatto/Telaio (244)-2.2 HDi	04/2002 →	
EXPERT Furgonato (VF3A_, VF3U_, VF3X_)-2.0 HDi	01/2007 →	
EXPERT Pianale piatto/Telaio-2.0 HDi	01/2007 →	
EXPERT Tepee (VF3V_)-2.0 HDi	01/2007 →	

063280901010 MSN882 1,0kW 12V

HYUNDAI		
ACCENT II (LC)-1.3	01/2000 →	
ACCENT II (LC)-1.5	01/2000 →	
ACCENT II (LC)-1.6	12/2002 →	
ACCENT III (MC)-1.4 GL	11/2005 →	
ACCENT III (MC)-1.6 GLS	11/2005 →	
ACCENT Tre volumi (LC)-1.3	01/2000 →	11/2005
ACCENT Tre volumi (LC)-1.5	01/2000 →	11/2005
ACCENT Tre volumi (LC)-1.6	12/2002 →	11/2005
ACCENT Tre volumi (MC)-1.4 GL	11/2005 →	
ACCENT Tre volumi (MC)-1.6 GLS	11/2005 →	
COUPE (GK)-1.6 16V	03/2002 →	
ELANTRA (XD)-1.6	06/2000 →	
ELANTRA Tre volumi (XD)-1.6	06/2000 →	




063280901010 MSN882 1,0kW 12V		
HYUNDAI		
GETZ (TB)-1.3	09/2003 →	
GETZ (TB)-1.3 i	09/2002 →	
GETZ (TB)-1.4 i	08/2005 →	
GETZ (TB)-1.6	09/2002 →	
MATRIX (FC)-1.6	06/2001 →	
KIA		
CERATO (LD)-1.6	07/2004 →	
CERATO Tre volumi (LD)-1.6	04/2004 →	
JOICE-2.0	02/2000 →	
063280902010 MSN883 1,0kW 12V		
HYUNDAI		
ACCENT II (LC)-1.3	01/2000 →	
ACCENT II (LC)-1.5	01/2000 →	
ACCENT II (LC)-1.6	12/2002 →	
ACCENT III (MC)-1.4 GL	11/2005 →	
ACCENT III (MC)-1.5 CRDi GLS	11/2005 →	
ACCENT III (MC)-1.6 GLS	11/2005 →	
ACCENT Tre volumi (LC)-1.3	01/2000 →	11/2005
ACCENT Tre volumi (LC)-1.5	09/1999 →	11/2005
ACCENT Tre volumi (LC)-1.6	12/2002 →	11/2005
ACCENT Tre volumi (MC)-1.4 GL	11/2005 →	
ACCENT Tre volumi (MC)-1.5 CRDi GLS	11/2005 →	
ACCENT Tre volumi (MC)-1.6 GLS	11/2005 →	
ATOS PRIME (MX)-1.1	06/2003 →	
ELANTRA (XD)-1.6	05/2003 →	
ELANTRA Tre volumi (XD)-1.6	05/2003 →	
GETZ (TB)-1.3	09/2003 →	
GETZ (TB)-1.3 i	09/2002 →	
GETZ (TB)-1.4 i	08/2005 →	
GETZ (TB)-1.6	09/2002 →	
MATRIX (FC)-1.6	06/2001 →	
KIA		
CERATO (LD)-1.6	07/2004 →	
CERATO Tre volumi (LD)-1.6	04/2004 →	
063296842010 MSN886 3,5kW 12V		
CASE		
540-Tutte	01/1988 →	12/1993
433 V-Tutte	06/1973 →	12/1985
533A-Tutte	01/1986 →	12/1990
SERIE 500-533V	06/1973 →	12/1985
SERIE 600-633A	01/1986 →	12/1990
SERIE 600-633-A/E/V	01/1975 →	12/1985
SERIE 600-640A	06/1990 →	12/1993
SERIE 800-833A	09/1981 →	12/1990




063296842010 MSN886 3,5kW 12V		
CASE		
SERIE E-633A	01/1986 →	12/1990
SERIE E-833A	01/1986 →	12/1990
SERIE V-433	01/1986 →	06/1990
SERIE V-533	01/1986 →	06/1990
SERIE V-633	01/1986 →	06/1990
063296843010 MSN887 3,5kW 12V		
AGRIFULL		
SERIE 80-80 - 56	04/1982 →	06/1983
SERIE 80-80 - 56DT	04/1982 →	06/1983
DEUTZ		
F 1L 410-Tutte	03/1968 →	06/1973
F 2L 411 - D-Tutte	07/1973 →	12/1975
FARYMANN (FARNY & WEIDMANN)		
G10-Tutte	01/1972 →	10/1981
G20-Tutte	01/1972 →	10/1981
FARYMANN DIESEL		
DIESEL ENGINE-71W	04/1977 →	05/1985
DIESEL ENGINE-71W	06/1985 →	
DIESEL ENGINE-71W8	04/1977 →	05/1985
DIESEL ENGINE-71W8	06/1985 →	
FENDT		
FARM-1E	01/1968 →	05/1974
FARM-2DE	01/1968 →	03/1971
FARM-2E	01/1968 →	08/1970
FARM-2N	10/1969 →	12/1974
FARM-2S	10/1969 →	01/1972
FARM-3S	01/1968 →	05/1972
FARM-4S	01/1968 →	05/1972
FARM-F231 - GT	09/1965 →	12/1978
FARM-FIX - 2E	01/1968 →	05/1974
LANZ		
NF-Tutte	04/1977 →	12/1980
NI - F/R-Tutte	04/1977 →	12/1980
NO-Tutte	04/1977 →	12/1980
LOMBARDINI		
LDAM - 672-Tutte	04/1977 →	
LDAM - 674-Tutte	07/1976 →	12/1981
LDAM - 832-Tutte	04/1977 →	12/1979
LDAM - 833-Tutte	07/1976 →	12/1979
LDAM - 834-Tutte	07/1976 →	12/1979
MWM		
D208 - 2-Tutte	01/1965 →	12/1973
D208 - 3-Tutte	01/1965 →	12/1973
D208 - 4-Tutte	01/1965 →	12/1973

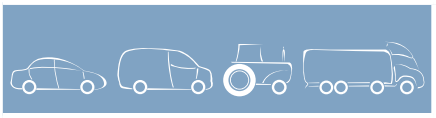


063296843010 MSN887 3,5kW 12V

MWM	
D225 - 2-Tutte	04/1967 → 12/1975
D225 - 3-Tutte	04/1967 → 12/1979
D226 - 2-Tutte	01/1972 →
D226 - 3-Tutte	01/1972 →
D308 - 2-Tutte	01/1965 → 12/1973
D308 - 3-Tutte	01/1965 → 12/1973
D308 - 4-Tutte	01/1965 → 12/1973
D325 - 2-Tutte	04/1967 → 12/1978
D325 - 3-Tutte	04/1967 → 12/1978
D325 - 3-Tutte	04/1967 → 12/1979
D327 - 2-Tutte	01/1972 →
D327 - 3-Tutte	01/1972 →
TD208 - 4-Tutte	02/1966 → 12/1973
SCHANZLIN	
TRACTOR-Gigant 300 K Traktor	04/1970 → 12/1988
SCHILTER	
TRACTOR-1300	06/1976 → 03/1980

063520003200 MSN2116 0,8kW 12V

FIAT	
IDEA-1.2 16V	02/2005 →
PANDA (169)-1.1	03/2005 → 12/2009
PANDA (169)-1.2	03/2005 → 12/2009
PANDA (169)-1.2 Bi-Power / Natural Power	03/2005 → 12/2009
PANDA Van (141_)-1.2	03/2005 →
LANCIA	
YPSILON (843)-1.2	02/2005 → 09/2006

063521060140 MSN2067 1,0kW 12V

SMART	
CABRIO-0.8 CDI (S1OLC1)	03/2001 → 01/2004
CITY-COUPE (MC01)-0.8 CDI (S1CLC1)	11/1999 → 01/2004
FORTWO Cabrio-0.8 CDI (450.400)	02/2004 → 03/2007
FORTWO Cabrio-0.8 CDi (451.400)	04/2007 → 07/2009
FORTWO Cabrio-0.8 CDi (451.401)	08/2009 →
FORTWO Coupe-0.8 CDI (450.300)	02/2004 → 03/2007
FORTWO Coupe-0.8 CDi (451.300)	04/2007 → 07/2009
FORTWO Coupe-0.8 CDi (451.391)	08/2009 →

063521070240 MSN2010 1,1kW 12V

ACME	
ADN-45	01/1979 →
ADN-37/2VW	01/1981 →
ADN-37VW	01/1981 →
ADN-37W	01/1979 →
ADN-48W	01/1979 →

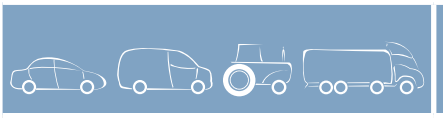


063521070240 MSN2010 1,1kW 12V

ACME	
ADN-54W	01/1979 →
ADN-60W	01/1979 →
ANADOLU	
D 510-Tutte	→
ARONA	
AD - 178M-Tutte	01/1978 → 12/1980
AD - 182L-Tutte	12/1981 → 12/1988
AD - 182M-Tutte	08/1978 → 12/1988
AD - 185M-Tutte	01/1978 → 12/1988
BCS	
SERIE 200-270	03/1992 →
SERIE 300-303	06/1978 →
SERIE 600-603	03/1992 →
SERIE 600-622	01/1968 →
SERIE 700-701	03/1992 →
SERIE 700-701	12/1975 → 12/1985
SERIE 700-705	06/972 → 12/1978
SERIE 700-715	12/1972 → 10/1991
SERIE 700-735	06/1978 → 12/1987
SERIE 700-735	03/1992 →
SERIE 700-737	01/1989 →
SERIE 700-745	01/1984 →
SERIE 700-755	12/1985 → 12/1986
BERTOLINI	
303-Tutte	06/1978 → 12/1986
306-Tutte	01/1980 → 04/1991
308-Tutte	06/1980 → 06/1991
312-Tutte	07/1990 →
315-Tutte	01/1970 → 07/1989
318-Tutte	01/1989 → 12/1991
100-SERIE-124D	03/1992 →
124 D-Tutte	01/1986 →
300-SERIE-312	03/1992 →
300-SERIE-318	03/1992 →
300-SERIE-310S	03/1992 →
310 S-Tutte	01/1986 →
310S-Tutte	10/1969 → 12/1985
400-SERIE-408	03/1992 →
DUCATI	
DM-Tutte	09/1982 → 06/1990
HD-Tutte	06/1980 → 12/1987
RH-Tutte	01/1983 → 12/1985
FERRARI	
CRANES-718	06/1980 → 12/1983




063521070240 MSN2010 1,1kW 12V	
FERRARI	
CRANES-700-SERIE - 792	03/1992 →
CRANES-700-SERIE - 794	03/1992 →
MOTOCOLTIVATORE-71	06/1980 → 12/1983
MOTOCOLTIVATORE-300-SERIE - 305	03/1992 →
MOTOCOLTIVATORE-300-SERIE - 306/307	03/1992 →
MOTOCOLTIVATORE-70-SERIE - 72S	03/1992 →
MOTOCOLTIVATORE-72 S	01/1981 → 12/1987
MOTOCOLTIVATORE-T 72	06/1980 → 12/1981
MOTOCOLTIVATORE-T 93	01/1988 →
GOLDONI	
MOTOCOLTIVATORE-108	01/1979 → 07/1982
MOTOCOLTIVATORE-140	01/1974 →
MOTOCOLTIVATORE-142	01/1987 →
MOTOCOLTIVATORE-144	01/1974 → 01/1987
MOTOCOLTIVATORE-149	01/1974 → 02/1987
MOTOCOLTIVATORE-610	01/1978 → 12/1985
MOTOCOLTIVATORE-716	01/1974 → 04/1984
MOTOCOLTIVATORE-49A	03/1987 →
MOTOCOLTIVATORE-49L	11/1990 →
MOTOCOLTIVATORE-59A	05/1983 → 12/1990
MOTOCOLTIVATORE-FC9	04/1991 →
HITTNER	
Ecotrac-Ecotrac - 30	→
LOMBARDINI	
10LD - 360.2-Tutte	01/1982 → 01/1984
10LD - 400.2-Tutte	05/1983 → 12/1984
10LD - 400.2/B1-Tutte	01/1984 →
3LD - 450-Tutte	03/1992 →
3LD - 510-Tutte	03/1992 →
3LD - 510/L-Tutte	03/1992 →
6LD - 325C-Tutte	03/1992 →
6LD - 360-Tutte	01/1982 →
6LD - 360/V-Tutte	01/1982 →
6LD - 400-Tutte	11/1983 →
6LD - 435-Tutte	03/1992 →
6LD - 435V-Tutte	03/1992 →
9LD - 625.2-Tutte	01/1988 →
LDA - 450-Tutte	01/1968 → 12/1981
LDA - 510-Tutte	04/1970 → 12/1981
LDA - 80-Tutte	07/1968 → 12/1976
LDAL - 80-Tutte	07/1968 → 12/1979
LDAM - 450-Tutte	01/1968 → 12/1979
MOSA	
Gruppo Elettrogeno-GE - 5000	03/1983 → 09/1986




063521070240 MSN2010 1,1kW 12V	
MOSA	
Gruppo Elettrogeno-GE - 5000D	10/1986 →
Gruppo Elettrogeno-GE - 5000DS	10/1986 →
Gruppo Elettrogeno-GE - 7000	01/1986 →
MOTOSALDATRICE-MS - 220	06/971 → 06/1981
MOTOSALDATRICE-MS - 220	02/1995 →
MOTOSALDATRICE-MSG - 180D	12/1982 → 12/1986
MOTOSALDATRICE-TS - 180D	01/1986 →
MOTOSALDATRICE-TS - 180DE	10/1987 →
MOTOSALDATRICE-TS - 250S	12/1988 →
RUGGERINI	
F10-Tutte	→
RDK 901/2-Tutte	06/1979 →
RDK80-Tutte	→
RDM901/1-Tutte	→
RK180-Tutte	→
RM80-Tutte	→
RM81-Tutte	→
VALPADANA	
MOTOCOLTIVATORE-VMC 130	05/1982 → 01/1992
MOTOCOLTIVATORE-VMC 130	03/1992 →
MOTOCOLTIVATORE-VMC 14	03/1992 →
MOTOCOLTIVATORE-VMC 14	07/1970 → 01/1986
MOTOCOLTIVATORE-VMC 150	03/1992 →
MOTOCOLTIVATORE-VMC 150	04/1984 → 01/1986
VM MOTORI	
DM - 182-Tutte	09/1982 → 06/1990
063521070460 MSN2011 1,1kW 12V	
LOMBARDINI	
15LD - 315-Tutte	→
15LD - 350-Tutte	→
15LD - 400-Tutte	→
15LD - 440-Tutte	→
063521070470 MSN2012 1,1kW 12V	
RENAULT	
LAGUNA (B56_, 556_)-1.8	01/1996 → 02/2001
LAGUNA (B56_, 556_)-1.8 (B56A/B)	01/1996 → 03/2001
MEGANE I (BA0/1_)-2.0 16V (BA0H)	07/1996 → 09/2003
MEGANE I (BA0/1_)-2.0 i (BA0G)	09/1996 → 02/1999
MEGANE I Cabriolet (EA0/1_)-2.0 (EA0G)	04/1997 → 09/2003
MEGANE I Cabriolet (EA0/1_)-2.0 16V (EA0H)	10/1996 → 11/1999
MEGANE I Classic (LA0/1_)-2.0 i (LA07, LA0G)	09/1996 → 04/1997
MEGANE I Coach (DA0/1_)-2.0 16V (DA0H)	03/1996 → 11/1999

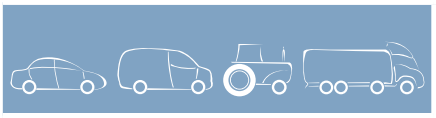


063521070470 MSN2012 1,1kW 12V		
RENAULT		
MEGANE I Coach (DA0/1_)-2.0 i (DA0G)	03/1996 →	03/1997
MEGANE Scenic (JA0/1_)-2.0 i (JA0G)	01/1997 →	09/1999
SPORT SPIDER (EF0_)-2.0	05/1996 →	08/1996
SPORT SPIDER (EF0_)-2.0 16V	05/1996 →	10/1999
063521070580 MSN2013 1,1kW 12V		
LOMBARDINI		
6LD 400-Tutte	→	
RUGGERINI		
MD151-Tutte	→	
063521070620 MSN2014 1,1kW 12V		
LOMBARDINI		
LDW - 1204/T-Tutte	→	
LDW - 1204M-Tutte	→	
063521070620 MSN2014 1,1kW 12V		
LOMBARDINI		
LDW - 502-Tutte	→	
LDW - 602-Tutte	→	
LDW - 702-Tutte	→	
LDW - 702M-Tutte	→	
LDW - 903-Tutte	→	
063521070630 MSN2015 1,1kW 12V		
CITROEN		
BERLINGO (MF)-1.8 i (MFLFX)	05/1997 →	11/2002
BERLINGO Furgonato (M_)-1.8 i	08/1999 →	10/2002
BX (XB-_)-16 E	05/1989 →	02/1993
BX Break (XB-_)-16	05/1989 →	12/1994
EVASION (22, U6)-1.8	05/1997 →	07/2002
EVASION (22, U6)-2.0	06/1994 →	07/2002
EVASION (22, U6)-2.0 16V	05/1998 →	04/2000
EVASION (22, U6)-2.0 Turbo C.T.	06/1994 →	07/2002
JUMPER Autobus (230P)-2.0	02/1994 →	02/2002
JUMPER Autobus (244, Z_)-2.0	04/2002 →	05/2006
JUMPER Furgonato (230L)-2.0	03/1994 →	02/2002
JUMPER Furgonato (244)-2.0	04/2002 →	05/2006
JUMPER Furgonato (244)-2.0 bivalent	02/2003 →	05/2006
JUMPER Pianale piatto/Telaio (230)-2.0	03/1994 →	02/2002
XANTIA (X1)-1.6 i	03/1993 →	01/1998
XANTIA (X1)-1.8 i	03/1993 →	01/1998
XANTIA (X1)-1.8 i 16V	06/1995 →	01/1998
XANTIA (X1)-2.0 i	03/1993 →	01/1998
XANTIA (X1)-2.0 i 16V	06/1995 →	01/1998
XANTIA (X1)-2.0 Turbo	06/1995 →	01/1998
XANTIA (X2)-1.6 i SX	03/1998 →	03/2001
XANTIA (X2)-1.8 i	01/1998 →	12/2001

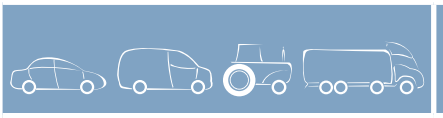


063521070630 MSN2015 1,1kW 12V		
CITROEN		
XANTIA (X2)-1.8 i 16V	01/1998 →	12/2001
XANTIA (X2)-2.0 i	01/1998 →	12/2001
XANTIA (X2)-2.0 i 16V	01/1998 →	12/2001
XANTIA (X2)-2.0 Turbo	01/1998 →	12/2001
XANTIA Break (X1)-1.8 i	09/1995 →	01/1998
XANTIA Break (X1)-1.8 i 16V	04/1997 →	01/1998
XANTIA Break (X1)-2.0 i	09/1995 →	01/1998
XANTIA Break (X1)-2.0 i 16V	09/1995 →	01/1998
XANTIA Break (X1)-2.0 Turbo	09/1995 →	01/1998
XANTIA Break (X2)-1.8 i	01/1998 →	12/2001
XANTIA Break (X2)-1.8 i 16V	01/1998 →	12/2001
XANTIA Break (X2)-2.0 i	01/1998 →	12/2001
XANTIA Break (X2)-2.0 i 16V	01/1998 →	12/2001
XANTIA Break (X2)-2.0 Turbo	01/1998 →	12/2001
XM (Y3)-2.0	05/1989 →	06/1994
XM (Y3)-2.0 i	05/1989 →	06/1994
XM (Y3)-2.0 i Turbo	09/1992 →	06/1994
XM (Y4)-2.0 i 16V	07/1994 →	10/2000
XM (Y4)-2.0 Turbo	07/1994 →	09/1995
XM Break (Y3)-2.0	05/1989 →	06/1994
XM Break (Y3)-2.0 i	11/1991 →	04/1994
XM Break (Y3)-2.0 Turbo	09/1992 →	04/1994
XM Break (Y4)-2.0 i 16V	07/1994 →	10/2000
XM Break (Y4)-2.0 Turbo	07/1994 →	09/1995
XSARA (N1)-1.8 i	07/1997 →	09/2000
XSARA (N1)-1.8 i 16V	07/1997 →	09/2000
XSARA (N1)-1.8 i Aut.	07/1997 →	09/2000
XSARA (N1)-2.0 16V	07/1997 →	09/2000
XSARA Break (N2)-1.8 i	04/1998 →	09/2000
XSARA Break (N2)-1.8 i 16V	04/1998 →	09/2000
XSARA Break (N2)-1.8 i Aut.	04/1998 →	09/2000
XSARA Break (N2)-2.0 16V	07/1998 →	09/2000
XSARA Coupe (N0)-1.8 i	02/1998 →	09/2000
XSARA Coupe (N0)-1.8 i 16V	02/1998 →	09/2000
XSARA Coupe (N0)-2.0	08/1998 →	08/2000
XSARA Coupe (N0)-2.0 i 16V	02/1998 →	08/2000
ZX (N2)-1.6 i	03/1991 →	12/1994
ZX (N2)-1.8	04/1996 →	10/1997
ZX (N2)-1.8 i	07/1992 →	06/1997
ZX (N2)-1.8 i 16V	01/1996 →	06/1997
ZX (N2)-1.9 i	03/1991 →	06/1997
ZX Break (N2)-1.6 i	10/1993 →	10/1997
ZX Break (N2)-1.8 i	10/1993 →	10/1997
ZX Break (N2)-1.8 i 16V	01/1996 →	02/1998




063521070630 MSN2015 1,1kW 12V

FIAT	
DUCATO Autobus (230)-2.0 Panorama/Combinato	03/1994 → 03/2002
DUCATO Autobus (244, Z_)-2.0	04/2002 → 08/2006
DUCATO Autobus (244, Z_)-2.0 Bipower	11/2002 → 08/2006
DUCATO Furgonato (230L)-2.0	03/1994 → 03/2002
DUCATO Furgonato (244)-2.0	04/2002 → 08/2006
DUCATO Furgonato (244)-2.0 Bipower	11/2002 → 08/2006
DUCATO Pianale piatto/Telaio (230)-2.0	06/1998 → 03/2002
ULYSSE (220)-1.8 (220.BB5)	05/1997 → 05/2000
ULYSSE (220)-2.0 (220.AC5)	09/1994 → 05/2000
ULYSSE (220)-2.0 16V	05/1998 → 05/2000
ULYSSE (220)-2.0 Turbo (220.AD5)	09/1994 → 05/2000
LANCIA	
ZETA (220)-2.0 16V (220AL5)	06/1999 → 07/2000
ZETA (220)-2.0 Turbo (220AD5, 220CD5)	05/1995 → 06/1999
PEUGEOT	
205 I Cabriolet (741B, 20D)-1.6 CJ	08/1992 → 12/1994
205 I Cabriolet (741B, 20D)-1.9 CTI	10/1990 → 10/1994
205 II (20A/C)-1.6	11/1990 → 09/1998
205 II (20A/C)-1.9 GTI	10/1987 → 09/1998
306 (7B, N3, N5)-1.8	10/1995 → 04/1997
306 (7B, N3, N5)-1.8 16V	05/1997 → 05/2001
306 (7B, N3, N5)-1.8 ST	06/1994 → 04/1997
306 (7B, N3, N5)-2.0	05/1997 → 05/2001
306 (7B, N3, N5)-2.0 ST	07/1994 → 04/1997
306 2 volumi /Coda spiovente (7A, 7C, N3, N5)-1.8	05/1993 → 04/1997
306 2 volumi /Coda spiovente (7A, 7C, N3, N5)-1.8 16V	05/1997 → 05/2001
306 2 volumi /Coda spiovente (7A, 7C, N3, N5)-2.0 16V	05/1997 → 05/2001
306 2 volumi /Coda spiovente (7A, 7C, N3, N5)-2.0 XSi	08/1993 → 04/1997
306 Break (7E, N3, N5)-1.8	05/1997 → 03/2002
306 Break (7E, N3, N5)-1.8 16V	05/1997 → 03/2002
306 Cabriolet (7D, N3, N5)-1.8	03/1994 → 04/1997
306 Cabriolet (7D, N3, N5)-1.8 16V	07/2000 → 04/2002
306 Cabriolet (7D, N3, N5)-2.0	03/1994 → 04/1997
306 Cabriolet (7D, N3, N5)-2.0 16V	05/1997 → 04/2002
405 I (15B)-1.6	07/1987 → 12/1992
405 I (15B)-1.9	07/1987 → 12/1992
405 I Break (15E)-1.6	10/1988 → 08/1992
405 I Break (15E)-1.6 SRi 4x4	04/1988 → 07/1992
405 I Break (15E)-1.9	07/1988 → 07/1992




063521070630 MSN2015 1,1kW 12V

PEUGEOT	
405 II (4B)-1.6	08/1992 → 10/1995
405 II (4B)-1.8	08/1992 → 10/1995
405 II (4B)-2.0	08/1992 → 10/1995
405 II Break (4E)-1.6	08/1992 → 10/1996
405 II Break (4E)-1.8	08/1992 → 10/1996
405 II Break (4E)-2.0	08/1992 → 10/1996
406 (8B)-1.6	11/1995 → 05/2004
406 (8B)-1.8	09/1997 → 05/2004
406 (8B)-1.8 16V	11/1995 → 10/2000
406 (8B)-2.0 16V	11/1995 → 05/2004
406 (8B)-2.0 Turbo	04/1996 → 03/1999
406 Break (8E/F)-1.8	09/1997 → 10/2004
406 Break (8E/F)-1.8 16V	10/1996 → 10/2000
406 Break (8E/F)-2.0 16V	10/1996 → 10/2004
406 Break (8E/F)-2.0 Turbo	10/1996 → 03/1999
406 Coupe (8C)-2.0 16V	03/1997 → 12/2004
508 SW-1.6 HDi	11/2010 →
605 (6B)-2.0	06/1989 → 05/1999
605 (6B)-2.0 16V	07/1994 → 05/1999
605 (6B)-2.0 Turbo	07/1992 → 05/1999
806 (221)-1.8	07/1995 → 08/2002
806 (221)-2.0	06/1994 → 08/2002
806 (221)-2.0 16V	05/1998 → 09/2000
806 (221)-2.0 Turbo	06/1994 → 08/2002
BOXER Autobus (230P)-2.0 i	03/1994 → 02/2002
BOXER Autobus (244, Z_)-2.0	04/2002 → 05/2006
BOXER Furgonato (230L)-2.0 i	06/1994 → 02/2002
BOXER Furgonato (244)-2.0	04/2002 → 05/2006
BOXER Pianale piatto/Telaio (ZCT_)-2.0	02/2002 → 05/2006
BOXER Pianale piatto/Telaio (ZCT_)-2.0 i	06/1994 → 02/2002
EXPERT (224)-1.8	10/1996 → 09/2000
EXPERT Furgonato (222)-1.8	10/1996 → 09/2000
PARTNER Combispace (5F)-1.8	05/1997 → 08/2002
PARTNER Furgonato (5)-1.8	03/1997 → 08/2000

063521070660 MSN2069 1,1kW 12V

FIAT	
BARCHETTA (183)-1.8 16V	04/1995 → 02/2005
BRAVA (182)-1.8 GT 16V (182.BC)	02/1997 → 09/2001
BRAVA (182)-2.0	11/1998 → 08/2000
BRAVO I (182)-1.8 GT (182.AC)	02/1997 → 09/2001
BRAVO I (182)-2.0 HGT 20V (182AQ)	11/1998 → 09/2001
COUPE (FA/175)-1.8 16V	10/1996 → 08/2000
COUPE (FA/175)-2.0 20V	04/1998 → 08/2000
COUPE (FA/175)-2.0 20V Turbo	04/1998 → 08/2000

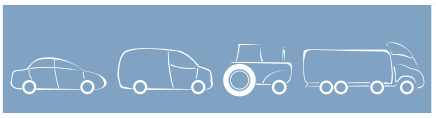


063521070660 MSN2069 1,1kW 12V

FIAT	
MAREA (185)-1.8 115 16V	10/1996 → 09/2002
MAREA (185)-2.0 150 20V	10/1996 → 02/1999
MAREA (185)-2.0 150 20V	01/2001 →
MAREA (185)-2.0 155 20V	04/1999 → 01/2001
MAREA Weekend (185)-1.8 115 16V	10/1996 → 09/2002
MAREA Weekend (185)-2.0 150 20V	10/1996 → 02/1999
MAREA Weekend (185)-2.0 150 20V	01/2001 →
MAREA Weekend (185)-2.0 155 20V	04/1999 → 01/2001
PUNTO (188)-1.8 130 HGT (188.738, .718)	09/1999 → 06/2003
STILO (192)-1.8 16V (192_XC1A)	10/2001 → 12/2003
STILO Multi Wagon (192)-1.8 16V	01/2003 →
LANCIA	
DEDRA (835)-1.8 GT 16V (835EH)	03/1996 → 07/1999
DEDRA SW (835)-1.8 GT 16V (835EH)	03/1996 → 07/1999
DELTA II (836)-1.8 i.e. 16V (836AQ)	03/1996 → 08/1999
DELTA II (836)-1.8 i.e. 16V GT (836AR)	03/1996 → 08/1999
LYBRA (839AX)-1.8 16V (839AXB1A, 839AXG1A)	10/1999 → 02/2002
LYBRA (839AX)-2.0 20V (839AXC11, 839AXC1A)	10/1999 → 09/2000
LYBRA SW (839BX)-1.8 16V (839BXB1A, 839BXG1A)	10/1999 → 02/2002
LYBRA SW (839BX)-2.0 20V (839BXC11, 839BXC1A)	10/1999 → 09/2000

063521070680 MSN2070 1,1kW 12V

AUDI	
100 (44, 44Q, C3)-1.8	01/1988 → 11/1990
100 (44, 44Q, C3)-1.8 quattro	01/1988 → 07/1988
100 (4A, C4)-2.0	08/1991 → 06/1994
100 (4A, C4)-2.0 E	08/1991 → 06/1994
100 (4A, C4)-2.0 E 16V	01/1992 → 06/1994
100 Avant (44, 44Q, C3)-1.8	01/1988 → 07/1989
100 Avant (44, 44Q, C3)-1.8 quattro	01/1988 → 07/1988
100 Avant (4A, C4)-2.0 E	09/1991 → 06/1994
100 Avant (4A, C4)-2.0 E 16V	07/1992 → 06/1994
80 (89, 89Q, 8A, B3)-1.6	08/1990 → 10/1991
80 (89, 89Q, 8A, B3)-1.8	10/1987 → 01/1990
80 (89, 89Q, 8A, B3)-1.8 E	09/1986 → 09/1987
80 (89, 89Q, 8A, B3)-1.8 S	10/1987 → 10/1991
80 (89, 89Q, 8A, B3)-2.0	10/1990 → 08/1991
80 (89, 89Q, 8A, B3)-2.0 E	08/1988 → 10/1990
80 (8C, B4)-1.6 E	10/1994 → 12/1994
80 (8C, B4)-2.0	09/1991 → 12/1994
80 (8C, B4)-2.0 E	09/1991 → 12/1994

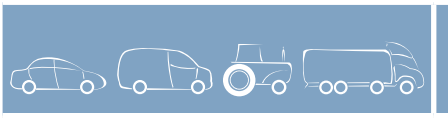


063521070680 MSN2070 1,1kW 12V

AUDI	
80 (8C, B4)-2.0 E 16V	08/1992 → 12/1994
80 Avant (8C, B4)-1.6 E	10/1994 → 07/1995
80 Avant (8C, B4)-2.0	08/1992 → 06/1995
80 Avant (8C, B4)-2.0 E	08/1992 → 07/1995
80 Avant (8C, B4)-2.0 E 16V	02/1993 → 07/1995
A4 (8D2, B5)-1.6	01/1995 → 07/2000
A4 (8D2, B5)-1.8	01/1995 → 05/1998
A4 (8D2, B5)-1.8 T	01/1995 → 05/1998
A4 Avant (8D5, B5)-1.6	03/1996 → 07/2000
A4 Avant (8D5, B5)-1.8	07/1995 → 05/1998
A4 Avant (8D5, B5)-1.8 T	03/1996 → 05/1998
A6 (4A, C4)-1.8	12/1995 → 10/1997
A6 (4A, C4)-2.0	06/1994 → 08/1996
A6 (4A, C4)-2.0 16V	06/1994 → 10/1997
A6 (4B, C5)-1.8	05/1997 → 05/1998
A6 (4B, C5)-1.8 T	04/1997 → 05/1998
A6 Avant (4A, C4)-1.8	12/1995 → 10/1997
A6 Avant (4A, C4)-2.0	06/1994 → 06/1996
A6 Avant (4A, C4)-2.0 16V	07/1996 → 10/1997
A6 Avant (4B, C5)-1.8	02/1998 → 05/1998
A6 Avant (4B, C5)-1.8 T	02/1998 → 05/1998
CABRIOLET (8G7, B4)-1.8	01/1997 → 03/1999
CABRIOLET (8G7, B4)-2.0 16V	06/1995 → 07/1996
CABRIOLET (8G7, B4)-2.0 E	01/1993 → 07/1998
COUPE (89, 8B)-1.8	08/1989 → 07/1991
COUPE (89, 8B)-2.0	05/1989 → 12/1995
COUPE (89, 8B)-2.0 16 V	01/1992 → 12/1995
FAW-AUDI	
A6 Tre volumi (C5)-1.8	09/1999 → 09/2002
VW	
PASSAT (3B2)-1.6	10/1996 → 05/1998
PASSAT (3B2)-1.8	12/1996 → 05/1998
PASSAT (3B2)-1.8 T	10/1996 → 05/1998
PASSAT Variant (3B5)-1.6	06/1997 → 05/1998
PASSAT Variant (3B5)-1.8	06/1997 → 05/1998
PASSAT Variant (3B5)-1.8 T	06/1997 → 05/1998

063521070730 MSN2071 1,1kW 12V

AUDI	
A4 (8D2, B5)-1.6	05/1998 → 10/2000
A4 (8D2, B5)-1.8	05/1998 → 10/2000
A4 (8D2, B5)-1.8 quattro	05/1998 → 11/2000
A4 (8D2, B5)-1.8 T	12/1997 → 10/2000
A4 (8E2, B6)-1.6	11/2000 → 06/2004
A4 (8E2, B6)-1.8 T	12/2000 → 06/2004





063521070730 MSN2071 1,1kW 12V

AUDI			
A4 (8E2, B6)-2.0	12/2000	→	06/2004
A4 (8E2, B6)-2.0 FSI	07/2002	→	06/2004
A4 Avant (8D5, B5)-1.6	05/1998	→	09/2001
A4 Avant (8D5, B5)-1.8	05/1998	→	07/1999
A4 Avant (8D5, B5)-1.8 T	12/1997	→	09/2001
A4 Avant (8E5, B6)-1.6	09/2001	→	06/2004
A4 Avant (8E5, B6)-1.8 T	09/2001	→	06/2004
A4 Avant (8E5, B6)-2.0	09/2001	→	06/2004
A4 Avant (8E5, B6)-2.0 FSI	07/2002	→	06/2004
A4 Cabriolet (8H7, 8HE)-1.8	10/2002	→	08/2004
A4 Cabriolet (8H7, 8HE)-1.8 T	07/2002	→	06/2004
A6 (4B, C5)-1.8	12/1997	→	04/2001
A6 (4B, C5)-1.8 T	05/1998	→	04/2001
A6 (4B, C5)-2.0	08/2001	→	05/2004
A6 Avant (4B, C5)-1.8	02/1998	→	04/2001
A6 Avant (4B, C5)-1.8 T	05/1998	→	04/2001
A6 Avant (4B, C5)-2.0	08/2001	→	01/2005
CABRIOLET (8G7, B4)-1.8	04/1999	→	08/2000
FAW-AUDI			
A6 Tre volumi (C5)-1.8	09/1999	→	09/2002
SKODA			
SUPERB (3U4)-1.8 T	02/2002	→	02/2004
SUPERB (3U4)-2.0	02/2002	→	02/2004
VW			
PASSAT (3B2)-1.6	06/1998	→	11/2000
PASSAT (3B2)-1.8	06/1998	→	11/2000
PASSAT (3B2)-1.8 T	06/1998	→	11/2000
PASSAT (3B2)-2.0	04/2000	→	08/2000
PASSAT (3B3)-1.6	11/2000	→	10/2003
PASSAT (3B3)-1.8 T	02/2001	→	10/2003
PASSAT (3B3)-1.8 T 20V	11/2000	→	10/2003
PASSAT (3B3)-2.0	11/2000	→	10/2003
PASSAT Variant (3B5)-1.6	06/1998	→	11/2000
PASSAT Variant (3B5)-1.8	06/1998	→	11/2000
PASSAT Variant (3B5)-1.8 T	06/1998	→	11/2000
PASSAT Variant (3B6)-1.6	11/2000	→	10/2003
PASSAT Variant (3B6)-1.8 T	05/2002	→	10/2003
PASSAT Variant (3B6)-1.8 T 20V	11/2000	→	10/2003
PASSAT Variant (3B6)-2.0	11/2000	→	10/2003
PASSAT Variant (3B6)-2.0 4motion	11/2000	→	10/2003

063521070780 MSN2016 1,2kW 12V

FORD			
1310 Compact 3-58 Shibaura-Tutte	01/1983	→	01/1986
1510 Compact 3-58 Shibaura-Tutte	01/1983	→	01/1986





063521070780 MSN2016 1,2kW 12V

FORD			
Skid Steer Loader-CL25 Shibaura diesel	01/1983	→	01/1986
JOHN DEERE			
4240/4440/4450-Tutte	→		→
NEW HOLLAND			
1310 Compact 3-58 Shibaura-Tutte	01/1983	→	01/1986
1510 Compact 3-58 Shibaura-Tutte	01/1983	→	01/1986
LOADER COMPACT-CL25 Shibaura diesel	01/1983	→	01/1986
PERKINS			
102-05/103-07/103-10-Tutte	→		→

063521070910 MSN2017 1,1kW 12V

FIAT			
BRAVA (182)-1.6 16V (182.BB)	06/2000	→	09/2001
BRAVO I (182)-1.6 16V (182.AB)	06/2000	→	09/2001
DOBLO (119)-1.6	01/2003	→	09/2005
DOBLO (119)-1.6 16V (223AXD1A)	10/2001	→	09/2005
DOBLO (119)-1.6 Natural Power	01/2003	→	09/2005
DOBLO Cargo (223)-1.6 16V (223ZXD1A)	10/2001	→	09/2005
DOBLO Cargo (223)-1.6 Natural Power	01/2003	→	09/2005
MAREA (185)-1.6	09/2000	→	08/2002
MAREA (185)-1.6 100 16V	03/1999	→	09/2002
MAREA (185)-1.6 100 16V Bipower	11/1999	→	09/2002
MAREA Weekend (185)-1.6	09/2001	→	08/2002
MAREA Weekend (185)-1.6 100 16V	03/1999	→	03/2002
MULTIPLA (186)-1.6	09/2000	→	08/2005
MULTIPLA (186)-1.6 100 16V (186AXA1A)	04/1999	→	
MULTIPLA (186)-1.6 16V (186AGB1A)	04/2002	→	12/2010
MULTIPLA (186)-1.6 16V Bipower	04/1999	→	12/2010
MULTIPLA (186)-1.6 16V Blupower (186AMA1A)	04/1999	→	03/2002
STILO (192)-1.6 16V (192_XB1A)	10/2001	→	12/2003
STILO Multi Wagon (192)-1.6 16V	01/2003	→	
LANCIA			
LYBRA (839AX)-1.6	10/2000	→	09/2005
LYBRA (839AX)-1.6 16V (839AXA1A)	06/2000	→	
LYBRA SW (839BX)-1.6	10/2000	→	09/2005
LYBRA SW (839BX)-1.6 16V (839BXA1A)	06/2000	→	

063521071030 MSN2073 1,1kW 12V

SEAT			
AROSA (6H)-1.4 16V	01/2000	→	06/2004
CORDOBA-1.0	05/1999	→	09/2002
CORDOBA-1.4	05/1999	→	09/2002
CORDOBA-1.6	05/1999	→	09/2002
CORDOBA (6K2/C2)-1.0 i	09/1996	→	06/1999
CORDOBA (6K2/C2)-1.4 i	01/1996	→	06/1999




063521071030 MSN2073 1,1kW 12V

SEAT		
CORDOBA (6K2/C2)-1.4 i 16V	09/1996 →	06/1999
CORDOBA (6K2/C2)-1.6 i	09/1993 →	12/1998
CORDOBA (6K2/C2)-1.9 SDI	08/1996 →	06/1999
CORDOBA 2 volumi /Coda spiovente (6K2)-1.0	06/1999 →	10/2002
CORDOBA 2 volumi /Coda spiovente (6K2)-1.0 16V	05/2000 →	10/2002
CORDOBA 2 volumi /Coda spiovente (6K2)-1.4	06/1999 →	10/2002
CORDOBA 2 volumi /Coda spiovente (6K2)-1.4 16V	02/2000 →	10/2002
CORDOBA 2 volumi /Coda spiovente (6K2)-1.6	06/1999 →	10/2002
CORDOBA Vario (6K5)-1.4	06/1999 →	12/2002
CORDOBA Vario (6K5)-1.4 16V	06/1999 →	06/2000
CORDOBA Vario (6K5)-1.4 i	05/1997 →	06/1999
CORDOBA Vario (6K5)-1.6	06/1999 →	08/2002
CORDOBA Vario (6K5)-1.6 i	05/1997 →	12/1998
CORDOBA Vario (6K5)-1.9 SDI	06/1997 →	06/1999
IBIZA II (6K1)-1.0	03/1993 →	06/1996
IBIZA II (6K1)-1.0 i	09/1996 →	08/1999
IBIZA II (6K1)-1.4 i	12/1997 →	08/1999
IBIZA II (6K1)-1.4 i 16V	11/1996 →	08/1999
IBIZA II (6K1)-1.6 i	07/1994 →	12/1998
IBIZA II (6K1)-1.9 SDI	08/1996 →	08/1999
IBIZA III (6K1)-1.0	08/1999 →	02/2002
IBIZA III (6K1)-1.0 16V	05/2000 →	02/2002
IBIZA III (6K1)-1.4	08/1999 →	02/2002
IBIZA III (6K1)-1.4 16V	08/1999 →	02/2002
IBIZA III (6K1)-1.6	08/1999 →	02/2002
INCA (6K9)-1.4 16V	09/2000 →	06/2003
INCA (6K9)-1.4 i	09/2000 →	06/2003
INCA (6K9)-1.6 i	06/1997 →	09/2000
VW		
CADDY II Furgonato (9K9A)-1.4	09/2000 →	06/2003
CADDY II Furgonato (9K9A)-60 1.4	11/1995 →	06/2003
CADDY II Furgonato (9K9A)-75 1.6	06/1997 →	09/2000
CADDY II Station wagon (9K9B)-1.4	11/1995 →	06/2003
CADDY II Station wagon (9K9B)-1.4 16V	09/2000 →	06/2003
CADDY II Station wagon (9K9B)-1.6	06/1997 →	09/2000
GOLF III (1H1)-1.4	10/1992 →	07/1995
GOLF III (1H1)-1.6	09/1992 →	09/1994
GOLF III Variant (1H5)-1.4	07/1993 →	07/1995
LUPO (6X1, 6E1)-1.0	10/1998 →	05/2000
LUPO (6X1, 6E1)-1.4	10/2000 →	07/2005
LUPO (6X1, 6E1)-1.4 16V	10/1998 →	07/2005
POLO (6N1)-100 1.4 16V	04/1996 →	10/1999
POLO (6N1)-120 1.6 16V GTI	09/1998 →	10/1999
POLO (6N1)-75 1.6	10/1994 →	07/1995

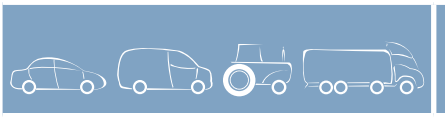


063521071030 MSN2073 1,1kW 12V

VW		
POLO (6N2)-1.0	10/1999 →	09/2001
POLO (6N2)-1.4 16V	10/1999 →	09/2001
POLO (6N2)-1.6 16V GTI	11/1999 →	09/2001
POLO CLASSIC (6KV2)-54 1.4	01/1998 →	08/1999
POLO CLASSIC (6KV2)-60 1.4	05/1996 →	09/2001
POLO CLASSIC (6KV2)-75 1.4 16V	10/1999 →	09/2001
POLO CLASSIC (6KV2)-75 1.6	04/1997 →	09/2001
POLO Furgonato (6NF)-1.6	10/1994 →	07/1995
POLO Variant (6KV5)-1.4	10/1999 →	09/2001
POLO Variant (6KV5)-1.4 16V	10/1999 →	09/2001
POLO Variant (6KV5)-1.6	09/1997 →	09/2001
VENTO (1H2)-1.4	10/1992 →	07/1995
VENTO (1H2)-1.6	09/1992 →	09/1994

063521074030 MSN2074 1,1kW 12V

DAEWOO		
KORANDO (KJ)-2.3	01/1999 →	12/2000
KORANDO Cabrio (KJ)-2.0 16V	02/1999 →	12/2000
KORANDO Cabrio (KJ)-2.3	02/1999 →	12/2000
MUSSO (FJ)-2.3	01/1999 →	12/2000
MERCEDES-BENZ		
CLASSE C (W202)-C 180 (202.018)	03/1993 →	04/2000
CLASSE C (W202)-C 200 (202.020)	01/1994 →	04/2000
CLASSE C (W202)-C 200 Kompressor (202.025)	10/1995 →	04/2000
CLASSE C (W202)-C 220 (202.022)	03/1993 →	09/1996
CLASSE C (W202)-C 230 (202.023)	09/1996 →	06/1997
CLASSE C (W202)-C 230 Kompressor (202.024)	10/1995 →	04/2000
CLASSE C Station wagon (S202)-C 180 T (202.078)	06/1996 →	06/2000
CLASSE C Station wagon (S202)-C 200 T (202.080)	06/1996 →	06/2000
CLASSE C Station wagon (S202)-C 200 T Kompressor (202.082)	09/1997 →	03/2000
CLASSE C Station wagon (S202)-C 230 T (202.083)	06/1996 →	05/1997
CLASSE C Station wagon (S202)-C 230 T Kompressor (202.085)	06/1997 →	06/2000
CLASSE E (W124)-E 200 (124.019)	07/1993 →	06/1995
CLASSE E (W124)-E 220 (124.022)	07/1993 →	06/1995
CLASSE E (W210)-E 200 (210.035)	06/1995 →	06/2000
CLASSE E (W210)-E 200 Kompressor (210.045)	09/1997 →	06/2000
CLASSE E (W210)-E 230 (210.037)	06/1995 →	06/1997





063521074030 MSN2074 1,1kW 12V

MERCEDES-BENZ	
CLASSE E Cabriolet (A124)-E 200 (124.060)	07/1993 → 03/1998
CLASSE E Cabriolet (A124)-E 220 (124.062)	07/1993 → 03/1998
CLASSE E Coupe (C124)-E 200 (124.040)	07/1993 → 06/1997
CLASSE E Coupe (C124)-E 220 (124.042)	07/1993 → 06/1997
CLASSE E Station wagon (S124)-E 200 T (124.079)	07/1993 → 05/1996
CLASSE E Station wagon (S124)-E 220 T (124.082)	07/1993 → 05/1996
CLASSE E Station wagon (S210)-E 200 T (210.235)	06/1996 → 08/2000
CLASSE E Station wagon (S210)-E 200 T Kompressor (210.245)	06/1997 → 03/2003
CLASSE E Station wagon (S210)-E 230 T (210.237)	06/1996 → 06/1997
CLASSE M (W163)-ML 230 (163.136)	03/1998 → 06/2000
CLASSE V (638/2)-V 200 (638.214, 638.294)	02/1997 → 06/2000
CLASSE V (638/2)-V 230 (638.234, 638.294)	10/1996 → 06/2000
CLK (C208)-200 (208.335)	06/1997 → 06/2000
CLK (C208)-200 Kompressor (208.345)	06/1997 → 06/2000
CLK (C208)-230 Kompressor (208.347)	06/1997 → 06/2000
CLK Cabriolet (A208)-200 (208.435)	06/1998 → 06/2000
CLK Cabriolet (A208)-200 Kompressor (208.445)	03/1998 → 05/2000
CLK Cabriolet (A208)-230 Kompressor (208.447)	06/1998 → 05/2000
COUPE (C124)-220 CE (124.042)	10/1992 → 05/1993
KOMBI Station wagon (S124)-200 TE (124.079)	10/1992 → 06/1993
KOMBI Station wagon (S124)-220 TE (124.082)	10/1992 → 05/1993
SLK (R170)-200 (170.435)	09/1996 → 01/2000
SLK (R170)-200 Kompressor	10/1996 → 06/2000
SLK (R170)-230 Kompressor	09/1996 → 06/2000
SPRINTER 2-t Autobus (901, 902)-214	02/1995 → 03/2000
SPRINTER 2-t Autobus (901, 902)-214 NGT	04/2000 → 06/2000
SPRINTER 2-t Furgonato (901, 902)-214	02/1995 → 03/2000
SPRINTER 2-t Furgonato (901, 902)-214 NGT	04/2000 → 06/2000
SPRINTER 2-t Pianale piatto/Telaio (901, 902)-214	02/1995 → 03/2000
SPRINTER 2-t Pianale piatto/Telaio (901, 902)-214 NGT	04/2000 → 06/2000
SPRINTER 3-t Autobus (903)-314	02/1995 → 06/2000
SPRINTER 3-t Autobus (903)-314 NGT	04/2000 → 06/2000





063521074030 MSN2074 1,1kW 12V

MERCEDES-BENZ	
SPRINTER 3-t Furgonato (903)-314	02/1995 → 06/2000
SPRINTER 3-t Furgonato (903)-314 NGT	04/2000 → 06/2000
SPRINTER 3-t Pianale piatto/Telaio (903)-314	02/1995 → 06/2000
SPRINTER 3-t Pianale piatto/Telaio (903)-314 NGT	04/2000 → 06/2000
SPRINTER 4-t Autobus (904)-414	02/1996 → 03/2000
SPRINTER 4-t Furgonato (904)-414	02/1996 → 03/2000
SPRINTER 4-t Pianale piatto/Telaio (904)-414	02/1996 → 03/2000
Tre volumi (W124)-200 E (124.019)	10/1992 → 06/1993
Tre volumi (W124)-220 E (124.022)	10/1992 → 06/1993
VITO Autobus (638)-113 2.0 (638.114, 638.194)	02/1996 → 06/2000
VITO Autobus (638)-114 2.3 (638.134, 638.194)	12/1996 → 06/2000
VITO Furgonato (638)-113 2.0 (638.014, 638.094)	03/1997 → 06/2000
VITO Furgonato (638)-114 2.3 (638.034, 638.094)	03/1997 → 06/2000
SSANGYONG	
KORANDO (KJ)-2.0	05/1997 → 12/2005
KORANDO (KJ)-2.3	05/1997 → 12/2005
KORANDO Cabrio (KJ)-2.3	11/1997 → 12/2005
MUSSO (FJ)-2.0	10/1996 → 12/2005
MUSSO (FJ)-2.3	10/1996 → 12/2005
VW	
LT 28-35 II Autobus (2DM)-2.3	05/1996 → 11/2001
LT 28-46 II Furgonato (2DX0AE)-2.3	05/1996 → 11/2001
LT 28-46 II Pianale piatto/Telaio (2DX0FE)-2.3	06/1996 → 11/2001

063521074110 MSN2076 1,1kW 12V

ALFA ROMEO	
147 (937)-1.6 16V T.SPARK	01/2001 → 12/2010
156 (932)-1.6 16V T.SPARK (932A4)	01/2002 → 09/2005
156 (932)-1.8 16V T.SPARK (932A31__)	01/2002 → 09/2005
156 (932)-2.0 JTS (932AXA)	03/2002 → 09/2005
156 Sportwagon (932)-1.6 16V T.SPARK. (932A4)	01/2002 → 12/2005
156 Sportwagon (932)-1.8 16V T.SPARK (932B31__)	01/2002 → 12/2005
156 Sportwagon (932)-2.0	03/2002 → 12/2005
156 Sportwagon (932)-2.0 JTS (932BXA)	03/2002 → 12/2005
GT-1.8 TS	11/2003 →
GT-2.0 JTS	11/2003 →
GTV (916C_)-2.0 JTS	04/2003 → 12/2005
GTV (916C_)-2.0 T.SPARK 16V (916.C2__, 916C2C00)	07/2002 → 12/2005

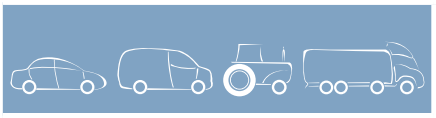


063521074110 MSN2076 1,1kW 12V	
ALFA ROMEO	
SPIDER (916S_)-2.0 JTS	04/2003 → 04/2005
SPIDER (916S_)-2.0 T.SPARK 16V (916S2C00)	07/2002 → 04/2005
FIAT	
BARCHETTA (183)-1.8 16V	04/1995 → 02/2005
PUNTO (188)-1.8 130 HGT (188.738, .718)	09/1999
STILO (192)-1.8 16V (192_XC1A)	10/2001 → 12/2003
STILO Multi Wagon (192)-1.8 16V	01/2003 → 12/2007
LANCIA	
LYBRA (839AX)-1.8 16V (839AXB1A, 839AXG1A)	03/2002 → 09/2005
LYBRA (839AX)-2.0 20V (839AXH1A)	10/2000 → 09/2005
LYBRA SW (839BX)-1.8 16V (839BXB1A, 839BXG1A)	03/2002 → 09/2005
LYBRA SW (839BX)-2.0 20V (839BXH1A)	10/2000 → 09/2005
063521074270 MSN2077 1,2kW 12V	
AUDI	
A4 (8E2, B6)-1.6	07/2004 → 12/2004
A4 (8E2, B6)-1.8 T	07/2004 → 12/2004
A4 (8E2, B6)-2.0	07/2004 → 12/2004
A4 (8E2, B6)-2.0 FSI	07/2004 → 12/2004
A4 (8EC)-1.6	11/2004 → 06/2008
A4 (8EC)-1.8 T	11/2004 → 06/2008
A4 (8EC)-2.0	11/2004 → 06/2008
A4 (8EC)-2.0 TFSI	11/2004 → 06/2008
A4 Avant (8E5, B6)-1.6	07/2004 → 12/2004
A4 Avant (8E5, B6)-1.8 T	07/2004 → 12/2004
A4 Avant (8E5, B6)-2.0	07/2004 → 12/2004
A4 Avant (8E5, B6)-2.0 FSI	07/2004 → 12/2004
A4 Avant (8ED)-1.6	11/2004 → 06/2008
A4 Avant (8ED)-1.8 T	11/2004 → 06/2008
A4 Avant (8ED)-2.0	11/2004 → 06/2008
A4 Avant (8ED)-2.0 TFSI	11/2004 → 06/2008
A4 Cabriolet (8H7, 8HE)-1.8	09/2004 → 10/2005
A4 Cabriolet (8H7, 8HE)-1.8 T	07/2004 → 12/2005
A4 Cabriolet (8H7, 8HE)-2.0	09/2004 → 03/2009
A4 Cabriolet (8H7, 8HE)-2.0 TFSI 16V	01/2006 → 03/2009
SEAT	
EXEO (3R2)-1.6	03/2009 → 09/2010
EXEO (3R2)-1.8 T	12/2008 → 05/2010
EXEO (3R2)-2.0 TFSI	03/2009 →
EXEO ST (3R5)-1.6	06/2009 → 09/2010
EXEO ST (3R5)-1.8 T	06/2009 → 05/2010
EXEO ST (3R5)-2.0 TFSI	06/2009 →

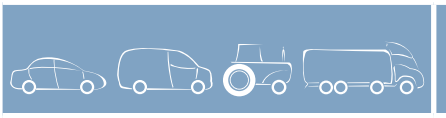


063521074270 MSN2077 1,2kW 12V	
SKODA	
SUPERB (3U4)-1.8 T	03/2004 → 03/2008
SUPERB (3U4)-2.0	03/2004 → 03/2008
VW	
PASSAT (3B3)-1.6	11/2003 → 05/2005
PASSAT (3B3)-1.8 T	11/2003 → 05/2005
PASSAT (3B3)-1.8 T 20V	11/2003 → 05/2005
PASSAT (3B3)-2.0	11/2003 → 05/2005
PASSAT Variant (3B6)-1.6	11/2003 → 05/2005
PASSAT Variant (3B6)-1.8 T	11/2003 → 05/2005
PASSAT Variant (3B6)-1.8 T 20V	11/2003 → 05/2005
PASSAT Variant (3B6)-2.0	11/2003 → 05/2005
063521074300 MSN2018 1,1kW 12V	
LOMBARDINI	
LWD - 502-Tutte	→
063521074370 MSN2078 1,1kW 12V	
OPEL	
MERIVA-1.3 CDTI	04/2005 → 03/2010
063521074420 MSN2019 1,4kW 12V	
BMW	
3 (E30)-316 i	08/1987 → 06/1991
3 (E30)-318 i	09/1987 → 06/1991
3 (E30)-318 is	09/1989 → 08/1991
3 (E36)-316 i	12/1990 → 02/1998
3 (E36)-318 i	12/1990 → 02/1998
3 (E36)-318 is	09/1993 → 02/1998
3 (E36)-320 i	09/1990 → 02/1998
3 (E36)-323 i 2.5	03/1995 → 02/1998
3 (E36)-325 i	09/1990 → 09/1995
3 (E36)-328 i	01/1995 → 02/1998
3 (E46)-316 i	09/1998 → 02/2005
3 (E46)-318 i	04/1998 → 09/2001
3 (E46)-320 i	04/1998 → 02/2005
3 (E46)-323 i	04/1998 → 09/2000
3 (E46)-325 i	09/2000 → 02/2005
3 (E46)-325 xi	09/2000 → 02/2005
3 (E46)-328 i	04/1998 → 06/2000
3 (E46)-330 i	06/2000 → 02/2005
3 (E46)-330 xi	07/2000 → 02/2005
3 Cabriolet (E30)-318 i	09/1990 → 04/1999
3 Cabriolet (E36)-320 i	12/1993 → 04/1999
3 Cabriolet (E36)-323 i 2.5	10/1995 → 04/1999
3 Cabriolet (E36)-325 i	03/1993 → 03/1995
3 Cabriolet (E36)-328 i	03/1995 → 04/1999





063521074420 MSN2019 1,4kW 12V

BMW			
3 Cabriolet (E46)-320 Ci	09/2000	→	08/2006
3 Cabriolet (E46)-323 Ci	04/2000	→	09/2000
3 Cabriolet (E46)-325 Ci	09/2000	→	08/2006
3 Cabriolet (E46)-330 Ci	06/2000	→	08/2006
3 Compact (E36)-316 g	12/1995	→	08/2000
3 Compact (E36)-316 i	03/1994	→	08/2000
3 Compact (E36)-318 ti	11/1994	→	08/2000
3 Compact (E36)-323 ti	08/1997	→	08/2000
3 Compact (E46)-325 ti	06/2001	→	02/2005
3 Coupe (E36)-316 i	09/1993	→	04/1999
3 Coupe (E36)-318 is	03/1992	→	04/1999
3 Coupe (E36)-320 i	03/1992	→	12/1998
3 Coupe (E36)-323 i 2.5	06/1995	→	04/1999
3 Coupe (E36)-325 i	03/1992	→	12/1995
3 Coupe (E36)-328 i	03/1995	→	04/1999
3 Coupe (E46)-316 Ci	04/2000	→	
3 Coupe (E46)-318 Ci	11/1999	→	09/2001
3 Coupe (E46)-320 Ci	08/1999	→	09/2000
3 Coupe (E46)-320 Ci	09/2000	→	
3 Coupe (E46)-323 Ci	04/1999	→	09/2000
3 Coupe (E46)-325 Ci	09/2000	→	
3 Coupe (E46)-328 Ci	04/1999	→	06/2000
3 Coupe (E46)-330 Ci	06/2000	→	05/2006
3 Coupe (E46)-330 xi	06/2000	→	
3 Touring (E30)-316 i	09/1991	→	06/1994
3 Touring (E30)-318 i	04/1989	→	06/1994
3 Touring (E36)-316 i	01/1996	→	10/1999
3 Touring (E36)-318 i	07/1995	→	10/1999
3 Touring (E36)-320 i	03/1995	→	10/1999
3 Touring (E36)-323 i 2.5	12/1995	→	10/1999
3 Touring (E36)-328 i	01/1995	→	02/1998
3 Touring (E46)-318 i	10/1999	→	09/2001
3 Touring (E46)-320 i	10/1999	→	02/2005
3 Touring (E46)-325 i	09/2000	→	02/2005
3 Touring (E46)-325 xi	09/2000	→	02/2005
3 Touring (E46)-328 i	10/1999	→	06/2000
3 Touring (E46)-330 i	06/2000	→	02/2005
3 Touring (E46)-330 xi	07/2000	→	02/2005
5 (E34)-518 i	08/1989	→	09/1995
5 (E34)-520 i 24V	09/1989	→	09/1995
5 (E34)-525 i 24V	09/1989	→	09/1995
5 (E39)-520 i	01/1996	→	06/2003
5 (E39)-523 i	11/1995	→	09/2000
5 (E39)-525 i	09/2000	→	06/2003





063521074420 MSN2019 1,4kW 12V

BMW			
5 (E39)-528 i	11/1995	→	09/2000
5 (E39)-530 i	09/2000	→	06/2003
5 (E60)-520i	07/2003	→	03/2005
5 (E60)-525i	09/2003	→	03/2005
5 (E60)-530i	07/2003	→	03/2005
5 Touring (E34)-518 g	11/1995	→	06/1996
5 Touring (E34)-518 i	03/1993	→	01/1997
5 Touring (E34)-520 i	11/1991	→	12/1996
5 Touring (E34)-525 i	11/1991	→	12/1996
5 Touring (E39)-520 d	06/2002	→	
5 Touring (E39)-520 i	01/1997	→	05/2004
5 Touring (E39)-523 i	01/1997	→	09/2000
5 Touring (E39)-525 i	09/2000	→	05/2004
5 Touring (E39)-528 i	01/1997	→	09/2000
5 Touring (E39)-530 i	09/2000	→	05/2004
5 Touring (E61)-525i	06/2004	→	03/2005
7 (E38)-728 i,iL	08/1995	→	11/2001
7 (E38)-728i X	11/1995	→	09/2001
7 (E65, E66)-730 i,Li	03/2003	→	03/2005
X3 (E83)-2.5 i	03/2004	→	08/2006
X3 (E83)-3.0 i	01/2004	→	08/2006
Z3 (E36)-1.8	10/1995	→	10/1998
Z3 (E36)-1.9	09/1998	→	01/2003
Z3 (E36)-2.0	04/1999	→	12/2000
Z3 (E36)-2.2	09/2000	→	09/2002
Z3 (E36)-2.8	04/1997	→	06/2000
Z3 (E36)-3.0	06/2000	→	01/2003
Z3 Coupe (E36)-2.8	09/1997	→	06/2000
Z3 Coupe (E36)-3.0	06/2000	→	06/2003
Z4 (E85)-2.2 i	10/2003	→	11/2005
Z4 (E85)-2.5 i	02/2003	→	
Z4 (E85)-3.0 i	02/2003	→	

063521074920 MSN2117 1,1kW 12V

OPEL			
ASTRA J-1.4	12/2009	→	
ASTRA J-1.4 Turbo	12/2009	→	
ASTRA Sports Tourer (J)-1.4	10/2010	→	
ASTRA Sports Tourer (J)-1.4 Turbo	10/2010	→	
MERIVA B-1.4	06/2010	→	
VAUXHALL			
ASTRA Mk VI (J)-1.4	12/2009	→	
ASTRA Mk VI (J)-1.4 Turbo	12/2009	→	
ASTRA Mk VI (J) Sports Tourer-1.4	10/2010	→	
MERIVA Mk II (B)-1.4	06/2010	→	

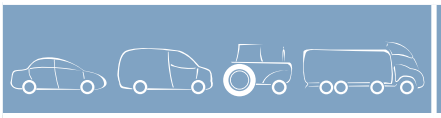


063521081760 MSN2079 1,4kW 12V

CITROEN	
BERLINGO (MF)-1.8 i (MFLFX)	05/1997 → 11/2002
BERLINGO Furgonato (M_)-1.8 i	08/1999 → 10/2002
EVASION (22, U6)-1.8	05/1997 → 07/2002
EVASION (22, U6)-2.0	06/1994 → 07/2002
EVASION (22, U6)-2.0 16V	05/1998 → 04/2000
EVASION (22, U6)-2.0 Turbo C.T.	06/1994 → 07/2002
JUMPER Autobus (230P)-2.0	02/1994 → 02/2002
JUMPER Autobus (244, Z_)-2.0	04/2002 → 05/2006
JUMPER Furgonato (230L)-2.0	03/1994 → 02/2002
JUMPER Furgonato (244)-2.0	04/2002 → 05/2006
JUMPER Furgonato (244)-2.0 bivalent	02/2003 → 05/2006
JUMPER Pianale piatto/Telaio (230)-2.0	03/1994 → 02/2002
XANTIA (X1)-1.6 i	03/1993 → 01/1998
XANTIA (X1)-1.8 i	03/1993 → 01/1998
XANTIA (X1)-1.8 i 16V	06/1995 → 01/1998
XANTIA (X1)-2.0 i	03/1993 → 01/1998
XANTIA (X1)-2.0 i 16V	06/1995 → 01/1998
XANTIA (X1)-2.0 Turbo	06/1995 → 01/1998
XANTIA (X2)-1.6 i SX	03/1998 → 03/2001
XANTIA (X2)-1.8 i	01/1998 → 12/2001
XANTIA (X2)-1.8 i 16V	01/1998 → 12/2001
XANTIA (X2)-2.0 i	01/1998 → 12/2001
XANTIA (X2)-2.0 i 16V	01/1998 → 12/2001
XANTIA (X2)-2.0 Turbo	01/1998 → 12/2001
XANTIA Break (X1)-1.8 i	09/1995 → 01/1998
XANTIA Break (X1)-1.8 i 16V	04/1997 → 01/1998
XANTIA Break (X1)-2.0 i	09/1995 → 01/1998
XANTIA Break (X1)-2.0 i 16V	09/1995 → 01/1998
XANTIA Break (X1)-2.0 Turbo	09/1995 → 01/1998
XANTIA Break (X2)-1.8 i	01/1998 → 12/2001
XANTIA Break (X2)-1.8 i 16V	01/1998 → 12/2001
XANTIA Break (X2)-2.0 i	01/1998 → 12/2001
XANTIA Break (X2)-2.0 i 16V	01/1998 → 12/2001
XANTIA Break (X2)-2.0 Turbo	01/1998 → 12/2001
XM (Y3)-2.0	05/1989 → 06/1994
XM (Y3)-2.0 i	05/1989 → 06/1994
XM (Y3)-2.0 i Turbo	09/1992 → 06/1994
XM (Y4)-2.0 i 16V	07/1994 → 10/2000
XM (Y4)-2.0 Turbo	07/1994 → 09/1995
XM Break (Y3)-2.0	05/1989 → 06/1994
XM Break (Y3)-2.0 i	11/1991 → 04/1994
XM Break (Y3)-2.0 Turbo	09/1992 → 04/1994
XM Break (Y4)-2.0 i 16V	07/1994 → 10/2000
XM Break (Y4)-2.0 Turbo	07/1994 → 09/1995

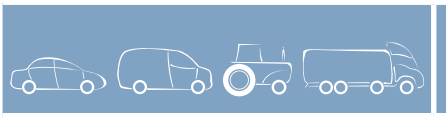


063521081760 MSN2079 1,4kW 12V

CITROEN	
XSARA (N1)-1.8 i	07/1997 → 08/2000
XSARA (N1)-1.8 i 16V	07/1997 → 08/2000
XSARA (N1)-2.0 16V	07/1997 → 08/2000
XSARA Break (N2)-1.8 i	04/1998 → 08/2000
XSARA Break (N2)-1.8 i 16V	04/1998 → 08/2000
XSARA Break (N2)-2.0 16V	07/1998 → 08/2000
XSARA Coupe (N0)-1.8 i	02/1998 → 08/2000
XSARA Coupe (N0)-1.8 i 16V	02/1998 → 08/2000
XSARA Coupe (N0)-2.0	08/1998 → 08/2000
XSARA Coupe (N0)-2.0 i 16V	02/1998 → 08/2000
ZX (N2)-1.9	03/1991 → 06/1997
ZX (N2)-1.9 i	03/1991 → 06/1997
ZX (N2)-2.0	07/1994 → 10/1997
ZX (N2)-2.0 i	07/1992 → 06/1997
FIAT	
DUCATO Autobus (230)-2.0 Panorama/Combinato	08/1999 → 03/2002
DUCATO Autobus (244, Z_)-2.0	04/2002 → 08/2006
DUCATO Furgonato (230L)-2.0	08/1999 → 03/2002
DUCATO Furgonato (244)-2.0	04/2002 → 08/2006
DUCATO Furgonato (244)-2.0 Bipower	11/2002 → 08/2006
DUCATO Pianale piatto/Telaio (230)-2.0	08/1999 → 03/2002
DUCATO Pianale piatto/Telaio (230)-2.0 4x4	08/1999 → 03/2002
ULYSSE (220)-1.8 (220.BB5)	05/1997 → 05/2000
ULYSSE (220)-1.9 TD (220AH5)	10/1996 → 12/1999
ULYSSE (220)-2.0 (220.AC5)	09/1994 → 05/2000
ULYSSE (220)-2.0 16V	05/1998 → 05/2000
ULYSSE (220)-2.0 Turbo (220.AD5)	09/1994 → 05/2000
PEUGEOT	
306 (7B, N3, N5)-1.8	10/1995 → 04/1997
306 (7B, N3, N5)-1.8 16V	05/1997 → 05/2001
306 (7B, N3, N5)-1.8 ST	06/1994 → 04/1997
306 (7B, N3, N5)-2.0	05/1997 → 05/2001
306 (7B, N3, N5)-2.0 ST	07/1994 → 04/1997
306 2 volumi /Coda spiovente (7A, 7C, N3, N5)-1.8	05/1993 → 04/1997
306 2 volumi /Coda spiovente (7A, 7C, N3, N5)-1.8 16V	05/1997 → 05/2001
306 2 volumi /Coda spiovente (7A, 7C, N3, N5)-2.0 16V	05/1997 → 05/2001
306 2 volumi /Coda spiovente (7A, 7C, N3, N5)-2.0 XSi	08/1993 → 04/1997
306 Break (7E, N3, N5)-1.8	05/1997 → 03/2002
306 Break (7E, N3, N5)-1.8 16V	05/1997 → 03/2002




063521081760 MSN2079 1,4kW 12V

PEUGEOT	
306 Cabriolet (7D, N3, N5)-1.8	03/1994 → 04/1997
306 Cabriolet (7D, N3, N5)-1.8 16V	07/2000 → 04/2002
306 Cabriolet (7D, N3, N5)-2.0	03/1994 → 04/1997
306 Cabriolet (7D, N3, N5)-2.0 16V	05/1997 → 04/2002
405 I Break (15E)-1.6	06/1992 → 07/1992
405 II (4B)-1.6	08/1992 → 10/1995
405 II (4B)-1.8	08/1992 → 10/1995
405 II (4B)-2.0	08/1992 → 10/1995
405 II Break (4E)-1.6	08/1992 → 10/1996
405 II Break (4E)-1.8	08/1992 → 10/1996
405 II Break (4E)-2.0	08/1992 → 10/1996
406 (8B)-1.6	11/1995 → 05/2004
406 (8B)-1.8	09/1997 → 05/2004
406 (8B)-1.8 16V	11/1995 → 10/2000
406 (8B)-2.0 16V	11/1995 → 05/2004
406 (8B)-2.0 Turbo	04/1996 → 03/1999
406 Break (8E/F)-1.8	09/1997 → 06/2004
406 Break (8E/F)-1.8 16V	10/1996 → 10/2000
406 Break (8E/F)-2.0 16V	10/1996 → 06/2004
406 Break (8E/F)-2.0 Turbo	10/1996 → 03/1999
406 Coupe (8C)-2.0 16V	03/1997 → 12/2004
605 (6B)-2.0	06/1989 → 05/1999
605 (6B)-2.0 16V	07/1994 → 05/1999
605 (6B)-2.0 Turbo	07/1992 → 05/1999
806 (221)-1.8	07/1995 → 08/2002
806 (221)-2.0	06/1994 → 08/2002
806 (221)-2.0 16V	05/1998 → 09/2000
806 (221)-2.0 Turbo	06/1994 → 08/2002
BOXER Autobus (230P)-2.0 i	03/1994 → 02/2002
BOXER Autobus (244, Z_)-2.0	04/2002 → 05/2006
BOXER Furgonato (230L)-2.0 i	06/1994 → 02/2002
BOXER Furgonato (244)-2.0	04/2002 → 05/2006
BOXER Pianale piatto/Telaio (ZCT_)-2.0	02/2002 → 05/2006
BOXER Pianale piatto/Telaio (ZCT_)-2.0 i	06/1994 → 02/2002
PARTNER Combispace (5F)-1.8	05/1997 → 08/2002
PARTNER Furgonato (5)-1.8	03/1997 → 08/2000

063521081800 MSN2020 1,4kW 12V

ARO	
10-1.9 D	09/1992 →
10-1.9 TD	06/1997 →
RENAULT	
19 I (B/C53_)-1.4	01/1988 → 12/1992
19 I (B/C53_)-1.8 16V (B/C53D)	06/1989 → 04/1992
19 I Cabriolet (D53_)-1.8 16V (D53D)	07/1991 → 04/1992




063521081800 MSN2020 1,4kW 12V

RENAULT	
19 I Chamade (L53_)-1.8 16V (L53D)	10/1989 → 04/1992
19 II (B/C53_)-1.4	01/1992 → 12/1995
19 II (B/C53_)-1.8 (5/353F, B/C538)	05/1994 → 12/1995
19 II (B/C53_)-1.8 16V (B/C53D)	04/1992 → 12/1995
19 II Cabriolet (D53_, 853_)-1.8	04/1992 → 06/1996
19 II Cabriolet (D53_, 853_)-1.8 16V (D53D)	04/1992 → 12/1995
19 II Chamade (L53_)-1.4 (L535)	11/1993 → 12/1995
19 II Chamade (L53_)-1.8	04/1992 → 12/1995
19 II Chamade (L53_)-1.8 16V (L53D)	04/1992 → 12/1995
19 II Furgonato (S53_)-1.9 dT	03/1992 → 12/1995
CLIO I (B/C57_, 5/357_)-1.2 (B/C/S572)	05/1990 → 03/1996
CLIO I (B/C57_, 5/357_)-1.8 16V (C57D)	08/1991 → 06/1994
CLIO I (B/C57_, 5/357_)-Williams (B/C57M)	01/1994 → 03/1996
CLIO II Furgonato (SB0/1/2_)-1.9 D (SB0E, SB0R)	09/1998 →
LAGUNA (B56_, 556_)-2.0	01/1994 → 02/2001
LAGUNA Grandtour (K56_)-2.0 (K56C/H)	09/1995 → 02/2001
MEGANE I (BA0/1_)-2.0 i (BA0G)	01/1996 → 03/1997
MEGANE Scenic (JA0/1_)-2.0 i (JA0G)	01/1997 → 09/1999
TRAFIC Autobus (TXW)-1.9 D	06/1997 → 03/2001
TRAFIC Furgonato (TXX)-1.9 D	06/1997 → 03/2001

063521082040 MSN2001 1,7kW 12V

FIAT	
DOBLO (119)-1.9 D (223AXB1A)	03/2001 → 09/2005
DOBLO Cargo (223)-1.9 D (223ZXB1A)	03/2001 → 09/2005
PALIO Weekend (178DX)-1.9 D (178DYD1A07)	03/2001 → 09/2001
PUNTO (188)-1.9 DS 60 (188.031, .051, .231, .251)	09/1999 → 06/2003
PUNTO Van (188AX)-1.9 D 60	02/2000 → 06/2003
STRADA (178E)-1.9 D	12/2000 → 03/2003

063521082170 MSN2081 1,6kW 12V

MERCEDES-BENZ	
CLASSE A (W169)-A 160 CDI (169.006, 169.306)	09/2004 →
CLASSE A (W169)-A 180 CDI (169.007, 169.307)	09/2004 →
CLASSE A (W169)-A 200 CDI (169.008, 169.308)	09/2004 →
CLASSE B (W245)-B 180 CDI (245.207)	04/2005 →
CLASSE B (W245)-B 200 CDI (245.208)	04/2005 →
VANEO (414)-1.7 CDI (414.700)	02/2002 → 08/2005

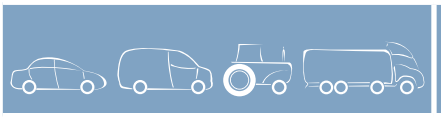


063521082390 MSN2119 1,4kW 12V

FIAT	
BRAVO II (198)-1.6 D Multijet	03/2010 →
DOBLO (152)-1.6 D 16V Multijet	02/2010 →
DOBLO (152)-1.6 D Multijet	02/2010 →
DOBLO Cargo (263)-1.6 D Multijet	02/2010 →
DOBLO Cargo Pianale piatto/Telaio (263)-1.6 D Multijet	02/2010 →
PUNTO EVO-1.6 D Multijet	10/2009 →
LANCIA	
LYBRA (839AX)-1.9 JTD	06/2001 → 11/2006
LYBRA SW (839BX)-1.9 JTD	06/2001 → 11/2006
MUSA (350)-1.6 D Multijet	07/2008 →
MUSA (350)-1.9 D Multijet	10/2004 →

063521084000 MSN2083 1,4kW 12V

CITROEN	
BERLINGO (MF)-1.9 D (MFWJZ)	07/1998 → 04/2008
BERLINGO (MF)-2.0 HDi	11/2002 → 10/2005

063521084000 MSN2083 1,4kW 12V

CITROEN	
BERLINGO (MF)-2.0 HDI 90 (MFRHY)	12/1999 → 04/2008
BERLINGO Furgonato (M_)-1.9 D 70 (MBWJZ, MCWJZ)	04/1999 → 11/2002
BERLINGO Furgonato (M_)-2.0 HDI 90 (MBRHY, MCRHY)	12/1999 → 04/2008
C15 (VD-_)-1.9 D	12/2000 → 12/2005
C4 (LC_)-2.0 16V	11/2004 → 07/2008
C4 (LC_)-2.0 16V	11/2004 → 10/2005
C4 Coupe (LA_)-2.0 16V	11/2004 → 03/2008
C4 Grand Picasso (UA_)-1.8 i 16V	10/2006 → 07/2008
C4 Grand Picasso (UA_)-2.0 i 16V	10/2006 → 10/2008
C4 Picasso (UD_)-1.8 i 16V	02/2007 → 07/2008
C4 Picasso (UD_)-2.0 i 16V	02/2007 → 10/2008
C4 Tre volumi-2.0 16V	07/2006 → 07/2008
C5 (DC_)-1.8 16V (DC6FZB, DC6FZE)	03/2001 → 08/2004
C5 (DC_)-2.0 16V	03/2001 → 08/2004
C5 (RC_)-1.8 16V	10/2004 → 03/2008
C5 (RC_)-2.0 16V (RCRFJB, RCRFJC)	10/2004 → 03/2008
C5 (RD_)-1.8 16V	04/2008 →
C5 (RD_)-2.0 16V	04/2008 → 01/2010
C5 (RD_)-2.0 16V BioFlex	04/2008 → 01/2010
C5 Break (DE_)-1.8 16V (DE6FZB, DE6FZE)	06/2001 → 08/2004
C5 Break (DE_)-2.0 16V	06/2001 → 08/2004
C5 Break (RE_)-1.8 16V	10/2004 → 03/2008
C5 Break (RE_)-2.0 16V (RERFJB, RERFJC)	10/2004 → 09/2007
C5 Break (TD_)-1.8 16V	04/2008 →

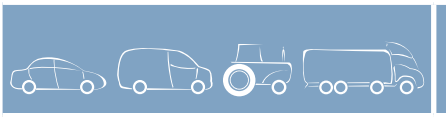


063521084000 MSN2083 1,4kW 12V

CITROEN	
C5 Break (TD_)-2.0 16V	04/2008 → 01/2010
C5 Break (TD_)-2.0 16V BioFlex	04/2008 → 01/2010
C8 (EA_, EB_)-2.0	07/2002 → 05/2006
C8 (EA_, EB_)-2.0 16V	10/2005 → 05/2010
C8 (EA_, EB_)-2.2	07/2002 → 05/2006
EVASION (22, U6)-2.0 16V	05/2000 → 07/2002
JUMPY (U6U)-1.9 D 70	10/1998 → 08/2001
JUMPY (U6U)-2.0	04/2000 → 12/2006
JUMPY (U6U)-2.0 HDi	10/1999 → 01/2007
JUMPY (U6U)-2.0 i 16V	04/2000 → 01/2007
JUMPY Furgonato (BS_, BT_, BY_, BZ_)-1.9 D 70	10/1998 → 08/2001
JUMPY Furgonato (BS_, BT_, BY_, BZ_)-2.0 HDi	10/1999 → 01/2007
JUMPY Furgonato (BS_, BT_, BY_, BZ_)-2.0 i 16V	04/2000 → 01/2007
JUMPY Pianale piatto/Telaio (BU_, BV_, BW_, BX_)-2.0	12/2003 → 10/2006
JUMPY Pianale piatto/Telaio (BU_, BV_, BW_, BX_)-2.0 HDi	10/1999 → 01/2007
XSARA (N1)-1.9 D	09/2000 → 03/2005
XSARA (N1)-2.0 16V	09/2000 → 03/2005
XSARA (N1)-2.0 HDi	09/2000 → 03/2005
XSARA Break (N2)-1.9 D	09/2000 → 08/2005
XSARA Break (N2)-2.0 16V	09/2000 → 08/2005
XSARA Break (N2)-2.0 HDI	09/2000 → 08/2005
XSARA Coupe (N0)-1.9 D	09/2000 → 03/2005
XSARA Coupe (N0)-2.0 16V	09/2000 → 03/2005
XSARA Coupe (N0)-2.0 HDI	09/2000 → 03/2005
XSARA PICASSO (N68)-1.8 16V	02/2000 →
XSARA PICASSO (N68)-2.0 16V	01/2003 →
XSARA PICASSO (N68)-2.0 HDi	01/2000 →
FIAT	
DUCATO Autobus (244, Z_)-2.0 JTD	04/2002 → 08/2006
DUCATO Furgonato (244)-2.0 JTD	04/2002 → 08/2006
DUCATO Pianale piatto/Telaio (244)-2.0 JTD	04/2002 → 08/2006
ULYSSE (179AX)-2.0	02/2004 → 10/2005
LANCIA	
PHEDRA (179)-2.0 (179AXA11)	09/2002 → 09/2005
PEUGEOT	
206 2 volumi /Coda spiovente (2A/C)-1.9 D	09/1998 → 10/2001
206 2 volumi /Coda spiovente (2A/C)-2.0 HDI 90	12/1999 → 10/2005
206 2 volumi /Coda spiovente (2A/C)-2.0 RC	07/2003 → 08/2006




063521084000 MSN2083 1,4kW 12V

PEUGEOT	
206 2 volumi /Coda spiovente (2A/C)-2.0 S16	04/1999 → 11/2004
206 CC (2D)-2.0 S16	09/2000 → 03/2007
206 SW (2E/K)-2.0 16V	07/2002 → 10/2005
206 SW (2E/K)-2.0 HDi	07/2002 → 10/2005
306 (7B, N3, N5)-1.9 D	09/1998 → 05/2001
306 (7B, N3, N5)-2.0 HDI 90	06/1999 → 05/2001
306 2 volumi /Coda spiovente (7A, 7C, N3, N5)-1.9 D	09/1998 → 05/2001
306 2 volumi /Coda spiovente (7A, 7C, N3, N5)-2.0 HDI 90	06/1999 → 05/2001
306 Break (7E, N3, N5)-1.9 D	09/1998 → 03/2002
306 Break (7E, N3, N5)-2.0 HDI 90	06/1999 → 03/2002
307 (3A/C)-2.0 16V	08/2000 → 08/2007
307 (3A/C)-2.0 HDi	08/2000 → 05/2005
307 Break (3E)-2.0	03/2002 → 05/2005
307 Break (3E)-2.0 16V	06/2005 → 05/2008
307 Break (3E)-2.0 HDI	03/2002 → 05/2005
307 CC (3B)-2.0 16V	10/2003 →
307 SW (3H)-2.0 16V	03/2002 → 05/2008
307 SW (3H)-2.0 HDI	03/2002 → 05/2005
406 (8B)-1.8 16V	10/2000 → 05/2004
406 (8B)-2.0 16V	04/1999 → 05/2004
406 (8B)-2.2	07/2000 → 05/2004
406 Break (8E/F)-1.8 16V	10/2000 → 06/2004
406 Break (8E/F)-2.0 16V	04/1999 → 06/2004
406 Break (8E/F)-2.2	07/2000 → 06/2004
406 Coupe (8C)-2.0 16V	04/1999 → 12/2004
406 Coupe (8C)-2.2	03/2002 → 12/2004
407 (6D_)-1.8	05/2004 → 10/2005
407 (6D_)-1.8 16V	10/2005 →
407 (6D_)-2.0	05/2004 →
407 (6D_)-2.0 16V	10/2005 →
407 (6D_)-2.0 Bioflex	09/2007 →
407 (6D_)-2.2	05/2004 →
407 (6D_)-2.2 16V	10/2005 →
407 Coupe (6C_)-2.2 16V	10/2005 →
407 SW (6E_)-1.8	04/2005 →
407 SW (6E_)-1.8 16V	10/2005 →
407 SW (6E_)-2.0	04/2005 →
407 SW (6E_)-2.0 16V	10/2005 →
407 SW (6E_)-2.0 Bioflex	01/2008 →
407 SW (6E_)-2.2	04/2005 →
407 SW (6E_)-2.2 16V	10/2005 →
607 (9D, 9U)-2.0	03/2000 → 11/2004




063521084000 MSN2083 1,4kW 12V

PEUGEOT	
607 (9D, 9U)-2.2 16V	02/2000 → 12/2007
806 (221)-2.0 16V	09/2000 → 08/2002
807 (E)-2.0	06/2002 → 05/2006
807 (E)-2.0 16V	10/2005 →
807 (E)-2.2	06/2002 → 05/2006
EXPERT (224)-1.9 D	12/2003 → 01/2007
EXPERT (224)-2.0	07/2000 → 01/2007
EXPERT (224)-2.0 HDI	07/2000 → 01/2007
EXPERT Furgonato (222)-1.9 D 70	12/1998 →
EXPERT Furgonato (222)-2.0	09/2002 → 01/2007
EXPERT Furgonato (222)-2.0 HDI	07/2000 → 01/2007
EXPERT Pianale piatto/Telaio (223)-1.9 D	06/1998 → 11/2003
EXPERT Pianale piatto/Telaio (223)-2.0 HDi	10/2000 → 11/2003
PARTNER Combispace (5F)-2.0 HDI	02/2000 → 08/2002
PARTNER Furgonato (5)-1.9 D	09/2000 →
PARTNER Furgonato (5)-2.0 HDi	04/2000 → 08/2002

063521090110 MSN2021 1,6kW 12V

PIAGGIO	
Diversi modelli-Tutte	→

063521090120 MSN2022 1,6kW 12V

LOMBARDINI	
Diesel engine-Tutte	→

063521090180 MSN2084 1,8kW 12V

FIAT	
FIORINO Furgonato (146 Uno)-1.7 D	06/1999 → 10/1999
FIORINO Furgonato (146 Uno)-65 1.7 TD	06/1999 → 05/2001
FIORINO Pick up (146)-1.7 D	06/1999 → 10/1999
FIORINO Pick up (146)-1.7 TD	06/1999 → 05/2001
PALIO Weekend (178DX)-1.7 TD (178DX.H1A)	09/1997 → 10/2000
PUNTO (176)-1.7 D	12/1996 → 04/1997
PUNTO (176)-1.7 TD	01/1994 → 04/1997
PUNTO (176)-60 TD 1.7	05/1997 → 08/1999
PUNTO Van (176L)-1.7 D	04/1996 → 12/1996
PUNTO Van (176L)-1.7 TD	05/1997 → 08/1999
STRADA (178E)-1.7 TD	06/1999 → 03/2003

063521090350 MSN2023 2,0kW 12V

JCB LANDPOWER	
COMPACT EXCAVATORS-8014CST	→
COMPACT EXCAVATORS-8016CTS	→
COMPACT EXCAVATORS-8018CTS	→
COMPACT EXCAVATORS-8020CTS	→
COMPACT EXCAVATORS-8025ZTS	→
COMPACT EXCAVATORS-8030CTS/ZTS	→
COMPACT EXCAVATORS-8035ZTS	→

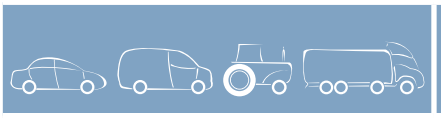


063521090350 MSN2023 2,0kW 12V	
JCB LANDPOWER	
COMPACT EXCAVATORS-8045ZTS	→
COMPACT EXCAVATORS-8050ZTS	→
COMPACT TRACK LOADERS-180T/HF	→
COMPACT TRACK LOADERS-190T/HF	→
MICRO EXCAVATORS-8008CTS	→
MICRO EXCAVATORS-8010CTS	→
PERKINS	
403C-07-403C-07	→
403C-10-Tutte	→
403C-11-403C-11	→
403C-15-403C-15	→
404C-20-Tutte	→
404C-22-404C-22	→
404C-22T-404C-22T	→

063521090470 MSN2024 1,8kW 12V	
LOMBARDINI	
Agricoli-Tutte	→

063521090680 MSN2002 2,0kW 12V	
OPEL	
ASTRA G 2 volumi /Coda spiovente (F48_, F08_)-2.0 DI	03/1998 → 08/2000
ASTRA G 2 volumi /Coda spiovente (F48_, F08_)-2.0 DTI 16V	09/2000 → 01/2004
ASTRA G 2 volumi /Coda spiovente (F48_, F08_)-2.2 DTI	09/2002 → 01/2004
ASTRA G Cabriolet-2.2 DTI	09/2002 → 08/2005
ASTRA G Coupe (F07_)-2.2 DTI	09/2002 → 05/2005
ASTRA G Furgonato (F70)-2.0 DI	01/1999 → 08/2000
ASTRA G Station wagon (F35_)-2.0 DI	03/1998 → 08/2000
ASTRA G Station wagon (F35_)-2.0 DTI 16V	09/2000 → 06/2004
ASTRA G Station wagon (F35_)-2.2 DTI	09/2002 → 06/2004
ASTRA G Tre volumi (F69_)-2.0 DI	09/1998 → 08/2000
ASTRA G Tre volumi (F69_)-2.0 DTI 16V	09/2000 → 01/2004
ASTRA G Tre volumi (F69_)-2.2 DTI	09/2002 → 01/2004
FRONTERA B (6B_)-2.2 DTI	10/1998 → 09/2004
OMEGA B (25_, 26_, 27_)-2.0 DTI 16V	09/1997 → 08/2000
OMEGA B (25_, 26_, 27_)-2.2 DTI 16V	09/2000 → 07/2003
OMEGA B Station wagon (21_, 22_, 23_)-2.0 DTI 16V	09/1997 → 08/2000
OMEGA B Station wagon (21_, 22_, 23_)-2.2 DTI 16V	09/2000 → 07/2003
SIGNUM-2.0 DTI	05/2003 → 09/2005
SIGNUM-2.2 DTI	05/2003 → 09/2005
SINTRA-2.2 DTI	09/1997 → 04/1999

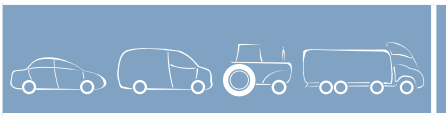


063521090680 MSN2002 2,0kW 12V	
OPEL	
VECTRA B (36_)-2.0 DI 16V	11/1996 → 04/2002
VECTRA B (36_)-2.0 DTI 16V	09/1997 → 04/2002
VECTRA B (36_)-2.2 DTI 16V	09/2000 → 04/2002
VECTRA B 2 volumi /Coda spiovente (38_)-2.0 DI 16V	11/1996 → 06/2000
VECTRA B 2 volumi /Coda spiovente (38_)-2.0 DTI 16V	09/1997 → 07/2003
VECTRA B 2 volumi /Coda spiovente (38_)-2.2 DTI 16V	09/2000 → 07/2003
VECTRA B Station wagon (31_)-2.0 DI 16V	11/1996 → 06/2000
VECTRA B Station wagon (31_)-2.0 DTI 16V	09/1997 → 07/2003
VECTRA B Station wagon (31_)-2.2 DTI 16V	09/2000 → 07/2003
VECTRA C-2.0 DTI 16V	04/2002 → 09/2005
VECTRA C-2.2 DTI 16V	04/2002 → 09/2005
VECTRA C GTS-2.0 DTI 16V	08/2002 → 09/2005
VECTRA C GTS-2.2 DTI 16V	08/2002 → 09/2005
VECTRA C Station wagon-2.0 DTI	10/2003 → 09/2005
VECTRA C Station wagon-2.2 DTI	10/2003 → 09/2005
ZAFIRA (F75_)-2.0 DI 16V	10/1999 → 08/2000
ZAFIRA (F75_)-2.0 DTI 16V	09/2000 → 06/2005
ZAFIRA (F75_)-2.2 DTI 16V	03/2002 → 06/2005
SAAB	
9-3 (YS3D)-2.2 TiD	03/1998 → 09/2002
9-5 (YS3E)-2.2 TiD	03/2002 → 08/2005
9-5 Station wagon (YS3E)-2.2 TiD	03/2002 → 08/2005
VAUXHALL	
ASTRA Mk IV (G)-2.0 DI	03/1998 → 07/2004
ASTRA Mk IV (G)-2.0 DTI 16V	09/2000 → 07/2004
ASTRA Mk IV (G) 2 volumi /Coda spiovente-2.0 DI	03/1998 → 08/2000
ASTRA Mk IV (G) 2 volumi /Coda spiovente-2.0 DTI 16V	09/2000 → 08/2005
ASTRA Mk IV (G) Station wagon-2.0 DI	03/1998 → 04/2004
ASTRA Mk IV (G) Station wagon-2.0 DTI 16V	09/2000 → 04/2004
ASTRAVAN Mk IV (G)-2.0 DI	08/1998 → 08/2000
ASTRAVAN Mk IV (G)-2.0 DTI	04/2004 → 08/2005
FRONTERA Mk II (B)-2.2 DTI	10/1998 → 09/2004
OMEGA (B)-2.0 DTI 16V	01/1998 → 08/2000
OMEGA (B)-2.2 DTI 16V	08/2000 → 09/2003
OMEGA (B) Station wagon-2.0 DTI 16V	01/1998 → 08/2000
OMEGA (B) Station wagon-2.2 DTI 16V	08/2000 → 09/2003
SIGNUM-2.0 DTI	05/2003 → 09/2005
SIGNUM-2.2 DTI	05/2003 → 09/2008
SINTRA-2.2 DTI	07/1997 → 04/1999




063521090680 MSN2002 2,0kW 12V

VAUXHALL	
VECTRA (B)-2.0 DI 16V	09/1996 → 08/2000
VECTRA (B)-2.0 DTI 16V	09/1997 → 08/2001
VECTRA (B)-2.2 DTI 16V	09/2000 → 08/2001
VECTRA (B) 2 volumi /Coda spiovente-2.0 Di 16V	09/1996 → 08/2000
VECTRA (B) 2 volumi /Coda spiovente-2.0 DTi 16V	09/1997 → 08/2001
VECTRA (B) 2 volumi /Coda spiovente-2.2 DTI 16V	09/2000 → 08/2001
VECTRA (B) Station wagon-2.0 DI 16V	09/1996 → 08/2000
VECTRA (B) Station wagon-2.0 DTI 16V	09/1997 → 08/2001
VECTRA (B) Station wagon-2.2 DTI 16V	09/2000 → 08/2001
VECTRA Mk II (C)-2.0 DTI 16V	04/2002 → 09/2005
VECTRA Mk II (C)-2.2 DTI 16V	04/2002 → 09/2005
VECTRA Mk II (C) GTS-2.0 DTI 16V	08/2002 → 09/2005
VECTRA Mk II (C) GTS-2.2 DTI 16V	08/2002 → 09/2005
VECTRA Mk II (C) Station wagon-2.0 DTI 16V	10/2003 → 09/2005
VECTRA Mk II (C) Station wagon-2.2 DTI 16V	10/2003 → 09/2005
ZAFIRA Mk I (A)-2.0 DI 16V	10/1999 → 08/2000
ZAFIRA Mk I (A)-2.0 DTI 16V	04/1999 → 06/2005
ZAFIRA Mk I (A)-2.2 D	03/2002 → 06/2005

063521092500 MSN2025 2,0kW 12V

MERCEDES-BENZ	
CLASSE C (W202)-C 200 CDI (202.134)	03/1998 → 04/2000
CLASSE C (W202)-C 200 D (202.120)	03/1993 → 08/1995
CLASSE C (W202)-C 200 D (202.122)	10/1996 → 06/1999
CLASSE C (W202)-C 220 CDI (202.133)	12/1997 → 04/2000
CLASSE C (W202)-C 220 D	07/1996 → 06/1999
CLASSE C (W202)-C 220 D (202.121)	08/1993 → 06/1999
CLASSE C (W202)-C 250 D (202.125)	05/1993 → 08/1995
CLASSE C (W202)-C 250 Turbo-D (202.128)	10/1995 → 05/2000
CLASSE C (W203)-C 200 CDI	03/2003 →
CLASSE C (W203)-C 200 CDI (203.004)	10/2000 → 02/2003
CLASSE C (W203)-C 200 CDI (203.007)	04/2003 →
CLASSE C (W203)-C 220 CDI (203.006)	05/2000 → 02/2003
CLASSE C (W203)-C 220 CDI (203.008)	04/2003 →
CLASSE C (W203)-C 270 CDI (203.016)	12/2000 → 08/2004
CLASSE C (W203)-C 30 CDI AMG (203.018)	01/2003 → 08/2004
CLASSE C Coupe (CL203)-C 200 CDI (203.707)	07/2003 →
CLASSE C Coupe (CL203)-C 220 CDI (203.706)	03/2001 → 02/2003
CLASSE C Coupe (CL203)-C 220 CDI (203.708)	02/2004 →




063521092500 MSN2025 2,0kW 12V

MERCEDES-BENZ	
CLASSE C Coupe (CL203)-C 30 CDI AMG (203.718)	09/2002 → 08/2004
CLASSE C Station wagon (S202)-C 200 T CDI (202.194)	03/1998 → 02/2001
CLASSE C Station wagon (S202)-C 200 T D (202.180)	10/1996 → 03/2001
CLASSE C Station wagon (S202)-C 220 T CDI (202.193)	12/1997 → 02/2001
CLASSE C Station wagon (S202)-C 220 T D	06/1996 → 06/1999
CLASSE C Station wagon (S202)-C 250 T Turbo-D (202.188)	06/1996 → 03/2001
CLASSE C T-Model (S203)-C 200 CDI	10/2001 → 08/2007
CLASSE C T-Model (S203)-C 220 CDI	03/2001 → 08/2007
CLASSE C T-Model (S203)-C 270 CDI (203.216)	03/2001 → 08/2004
CLASSE C T-Model (S203)-C 30 CDI AMG (203.218)	01/2003 → 08/2004
CLASSE E (W124)-E 250 D (124.126, 124.129)	07/1993 → 06/1995
CLASSE E (W210)-E 200 CDI (210.007)	07/1998 → 03/2002
CLASSE E (W210)-E 200 D (210.003)	03/1997 → 05/1999
CLASSE E (W210)-E 220 CDI (210.006)	07/1998 → 03/2002
CLASSE E (W210)-E 220 D	06/1995 → 03/2002
CLASSE E (W210)-E 250 D (210.010)	06/1995 → 05/1999
CLASSE E (W210)-E 250 Turbo-D (210.015)	09/1997 → 05/1999
CLASSE E (W210)-E 270 CDI (210.016)	07/1999 → 03/2002
CLASSE E (W210)-E 290 Turbo-D (210.017)	03/1996 → 05/1999
CLASSE E (W210)-E 320 CDI (210.026)	07/1999 → 03/2002
CLASSE E (W211)-E 200 CDI (211.004)	07/2002 → 09/2008
CLASSE E (W211)-E 220 CDI (211.006)	03/2002 →
CLASSE E (W211)-E 270 CDI (211.016)	03/2002 → 03/2005
CLASSE E (W211)-E 280 CDI (211.023)	05/2004 → 03/2005
CLASSE E (W211)-E 320 CDI (211.026)	11/2002 →
CLASSE E Station wagon (S124)-E 250 T D (124.186)	06/1993 → 06/1996
CLASSE E Station wagon (S210)-E 220 T CDI (210.206)	07/1998 → 01/2003
CLASSE E Station wagon (S210)-E 250 T D (210.210)	06/1996 → 06/1998
CLASSE E Station wagon (S210)-E 250 T Turbo-D (210.215)	09/1997 → 07/1999
CLASSE E Station wagon (S210)-E 270 T CDI (210.216)	07/1999 → 01/2003
CLASSE E Station wagon (S210)-E 290 T Turbo-D (210.217)	06/1996 → 05/1999




063521092500 MSN2025 2,0kW 12V

MERCEDES-BENZ

CLASSE E Station wagon (S210)-E 320 T CDI (210.226)	07/1999 → 01/2003
CLASSE E T-Model (S211)-E 220 CDI (211.206)	03/2003 → 08/2009
CLASSE E T-Model (S211)-E 220 T CDI (211.206)	03/2003 → 03/2006
CLASSE E T-Model (S211)-E 270 T CDI (211.216)	03/2003 → 03/2005
CLASSE E T-Model (S211)-E 280 T CDI (211.223)	05/2004 → 03/2005
CLASSE E T-Model (S211)-E 320 T CDI (211.226)	03/2003 → 03/2005
CLASSE G (W463)-G 270 CDI (463.322, 463.323)	10/2001 → 08/2006
CLASSE M (W163)-ML 270 CDI (163.113)	12/1999 → 06/2005
CLASSE S (W220)-S 320 CDI	08/1999 → 08/2005
CLASSE V (638/2)-V 200 CDI (638.294)	06/1999 → 07/2003
CLASSE V (638/2)-V 220 CDI (638.294)	06/1999 → 07/2003
CLASSE V (638/2)-V 230 TD (638.274)	09/1996 → 07/2003
CLK (C209)-220 CDI (209.308)	04/2005 → 09/2006
CLK (C209)-270 CDI (209.316)	10/2002 → 03/2005
SPRINTER 2-t Autobus (901, 902)-208 CDI	04/2000 → 05/2006
SPRINTER 2-t Autobus (901, 902)-208 D	02/1995 → 04/2000
SPRINTER 2-t Autobus (901, 902)-210 D	03/1997 → 03/2000
SPRINTER 2-t Autobus (901, 902)-211 CDI	04/2000 → 05/2006
SPRINTER 2-t Autobus (901, 902)-212 D	02/1995 → 03/2000
SPRINTER 2-t Autobus (901, 902)-213 CDI	04/2000 → 05/2006
SPRINTER 2-t Autobus (901, 902)-216 CDI	04/2000 → 05/2006
SPRINTER 2-t Furgonato (901, 902)-208 CDI	04/2000 → 05/2006
SPRINTER 2-t Furgonato (901, 902)-208 D	02/1995 → 03/2000
SPRINTER 2-t Furgonato (901, 902)-210 D	01/1997 → 03/2000
SPRINTER 2-t Furgonato (901, 902)-211 CDI	04/2000 → 05/2006
SPRINTER 2-t Furgonato (901, 902)-212 D	02/1995 → 03/2000
SPRINTER 2-t Furgonato (901, 902)-213 CDI	04/2000 → 05/2006
SPRINTER 2-t Furgonato (901, 902)-216 CDI	04/2000 → 05/2006
SPRINTER 2-t Pianale piatto/Telaio (901, 902)-208 CDI	04/2000 → 05/2006
SPRINTER 2-t Pianale piatto/Telaio (901, 902)-208 D	02/1995 → 03/2000
SPRINTER 2-t Pianale piatto/Telaio (901, 902)-210 D	01/1997 → 03/2000
SPRINTER 2-t Pianale piatto/Telaio (901, 902)-211 CDI	04/2000 → 05/2006

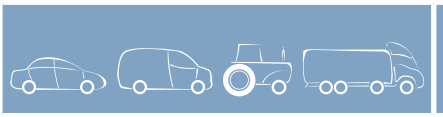


063521092500 MSN2025 2,0kW 12V

MERCEDES-BENZ

SPRINTER 2-t Pianale piatto/Telaio (901, 902)-212 D	02/1995 → 03/2000
SPRINTER 2-t Pianale piatto/Telaio (901, 902)-213 CDI	04/2000 → 05/2006
SPRINTER 2-t Pianale piatto/Telaio (901, 902)-216 CDI	04/2000 → 05/2006
SPRINTER 3,5 Pianale piatto/Telaio (906)-309 CDI	06/2006 → 03/2009
SPRINTER 3,5-t Furgonato (906)-309 CDI	06/2006 → 03/2009
SPRINTER 3-t Autobus (903)-2.9 TDi	01/1997 → 12/1999
SPRINTER 3-t Autobus (903)-308 CDI	04/2000 → 05/2006
SPRINTER 3-t Autobus (903)-308 D	02/1995 → 03/2000
SPRINTER 3-t Autobus (903)-310 D 4x4	05/1997 → 03/2000
SPRINTER 3-t Autobus (903)-311 CDI	04/2000 → 05/2006
SPRINTER 3-t Autobus (903)-312 D 2.9	02/1995 → 03/2000
SPRINTER 3-t Autobus (903)-313 CDI	04/2000 → 05/2006
SPRINTER 3-t Autobus (903)-316 CDI	04/2000 → 05/2006
SPRINTER 3-t Furgonato (903)-308 CDI	04/2000 → 05/2006
SPRINTER 3-t Furgonato (903)-308 D 2.3	02/1995 → 03/2000
SPRINTER 3-t Furgonato (903)-310 D 2.9	01/1997 → 03/2000
SPRINTER 3-t Furgonato (903)-311 CDI	04/2000 → 05/2006
SPRINTER 3-t Furgonato (903)-312 D 2.9	02/1995 → 03/2000
SPRINTER 3-t Furgonato (903)-313 CDI	04/2000 → 05/2006
SPRINTER 3-t Furgonato (903)-316 CDI	04/2000 → 05/2006
SPRINTER 3-t Furgonato (906)-209 CDI	06/2006 → 03/2009
SPRINTER 3-t Pianale piatto/Telaio (903)-308 CDI	04/2000 → 05/2006
SPRINTER 3-t Pianale piatto/Telaio (903)-308 D 2.3	02/1995 → 03/2000
SPRINTER 3-t Pianale piatto/Telaio (903)-310 D 2.9	01/1997 → 03/2000
SPRINTER 3-t Pianale piatto/Telaio (903)-311 CDI	04/2000 → 05/2006
SPRINTER 3-t Pianale piatto/Telaio (903)-312 D 2.9	02/1995 → 03/2000
SPRINTER 3-t Pianale piatto/Telaio (903)-313 CDI	04/2000 → 05/2006
SPRINTER 3-t Pianale piatto/Telaio (903)-316 CDI	04/2000 → 05/2006
SPRINTER 3-t Pianale piatto/Telaio (906)-209 CDI	06/2006 → 03/2009
SPRINTER 4-t Autobus (904)-408 CDI	04/2000 → 05/2006
SPRINTER 4-t Autobus (904)-411 CDI	04/2000 → 05/2006
SPRINTER 4-t Autobus (904)-413 CDI	04/2000 → 05/2006
SPRINTER 4-t Autobus (904)-416 CDI	04/2000 → 05/2006
SPRINTER 4-t Furgonato (904)-408 CDI	04/2000 → 05/2006
SPRINTER 4-t Furgonato (904)-408 D	02/1996 → 05/2006
SPRINTER 4-t Furgonato (904)-410 D	02/1996 → 05/2006
SPRINTER 4-t Furgonato (904)-411 CDI	04/2000 → 05/2006
SPRINTER 4-t Furgonato (904)-412 D	02/1996 → 05/2006
SPRINTER 4-t Furgonato (904)-413 CDI	04/2000 → 05/2006
SPRINTER 4-t Furgonato (904)-416 CDI	04/2000 → 05/2006





063521092500 MSN2025 2,0kW 12V

MERCEDES-BENZ			
SPRINTER 4-t Pianale piatto/Telaio (904)-408 CDI	04/2000	→	05/2006
SPRINTER 4-t Pianale piatto/Telaio (904)-408 D	02/1996	→	05/2006
SPRINTER 4-t Pianale piatto/Telaio (904)-410 D	02/1996	→	05/2006
SPRINTER 4-t Pianale piatto/Telaio (904)-411 CDI	04/2000	→	05/2006
SPRINTER 4-t Pianale piatto/Telaio (904)-412 D	02/1996	→	05/2006
SPRINTER 4-t Pianale piatto/Telaio (904)-413 CDI	04/2000	→	05/2006
SPRINTER 4-t Pianale piatto/Telaio (904)-416 CDI	04/2000	→	05/2006
SPRINTER 5-t Furgonato (906)-509 CDI	06/2006	→	03/2009
SPRINTER 5-t Pianale piatto/Telaio (906)-509 CDI	06/2006	→	03/2009
SPRINTER Pianale piatto/Telaio-616 CDI (905.612, 905.613, 905.622, 905.623)	04/2001	→	05/2006
SPRINTER Ribaltabile-616 CDI (905.612, 905.622, 905.623)	04/2001	→	05/2006
UNIMOG-U 100L	07/1996	→	09/2001
UNIMOG-U 90	07/1996	→	09/2001
UNIMOG-UX 100H,UX 100M	09/1996	→	
VARIO Autobus-O 812 (670.373, 670.674)	09/1996	→	01/2001
VARIO Cassone / Furgonato / Promiscuo-512 D (667.351, 667.352, 667.353)	09/1996	→	01/2001
VARIO Cassone / Furgonato / Promiscuo-612 D (668.351, 668.352, 668.353)	09/1996	→	01/2001
VARIO Cassone / Furgonato / Promiscuo-812 D (670.351, 670.352, 670.353)	09/1996	→	09/2006
VARIO Pianale piatto/Telaio-512 D (667.321, 667.322, 667.323)	09/1996	→	01/2001
VARIO Pianale piatto/Telaio-612 D (668.321, 668.322, 668.323)	09/1996	→	01/2001
VARIO Pianale piatto/Telaio-812 D (670.321, 670.322, 670.323, 670.324)	09/1996	→	09/2006
VARIO Ribaltabile-612 D (668.331, 668.332)	09/1996	→	01/2001
VARIO Ribaltabile-812 D (670.331, 670.332)	09/1996	→	09/2006
VIANO (W639)-2,0 CDI 4-matic	07/2005	→	10/2006
VIANO (W639)-CDI 2.0	09/2003	→	08/2010
VIANO (W639)-CDI 2.2	09/2003	→	08/2010
VITO / MIXTO Furgonato (W639)-109 CDi	10/2003	→	
VITO / MIXTO Furgonato (W639)-111 CDI	10/2003	→	
VITO / MIXTO Furgonato (W639)-115 CDI	10/2003	→	
VITO Autobus (638)-108 CDI 2.2 (638.194)	04/1999	→	07/2003
VITO Autobus (638)-108 D 2.3 (638.164)	02/1996	→	07/2003
VITO Autobus (638)-110 CDI 2.2 (638.194)	04/1999	→	07/2003
VITO Autobus (638)-110 TD 2.3 (638.174)	02/1996	→	07/2003
VITO Autobus (638)-112 CDI 2.2 (638.194)	04/1999	→	07/2003
VITO Autobus (W639)-109 CDI	10/2003	→	
VITO Autobus (W639)-111 CDI	10/2003	→	





063521092500 MSN2025 2,0kW 12V

MERCEDES-BENZ			
VITO Autobus (W639)-115 CDI	10/2003	→	07/2010
VITO Furgonato (638)-108 CDI 2.2 (638.094)	04/1999	→	07/2003
VITO Furgonato (638)-108 D 2.3 (638.064)	03/1997	→	07/2003
VITO Furgonato (638)-110 CDI 2.2 (638.094)	04/1999	→	07/2003
VITO Furgonato (638)-110 D 2.3 (638.074)	03/1997	→	07/2003
VITO Furgonato (638)-112 CDI 2.2 (638.094)	04/1999	→	07/2003

063521092680 MSN2085 2,2kW 12V

FIAT			
BRAVO II (198)-1.6 D Multijet	03/2008	→	
BRAVO II (198)-1.9 D Multijet	04/2007	→	12/2008
CROMA (194)-1.9 D Multijet	06/2005	→	
MAREA (185)-2.4 JTD 130	04/1999	→	09/2002
MAREA Weekend (185)-2.4 JTD 130	04/1999	→	09/2002
LANCIA			
DELTA III (844)-2.0 D Multijet	09/2008	→	
LYBRA (839AX)-2.4 JTD	10/1999	→	05/2002
LYBRA SW (839BX)-2.4 JTD	10/1999	→	05/2002
THESIS (841AX)-2.4 JTD (841AXD1B02)	07/2002	→	02/2005

063521093000 MSN2026 2,5kW 12V

CITROEN			
JUMPER Autobus (230P)-2.8 HDi	09/2000	→	02/2002
JUMPER Autobus (244, Z_)-2.8 HDi	04/2002	→	
JUMPER Furgonato (230L)-2.8 HDi	09/2000	→	02/2002
JUMPER Furgonato (244)-2.8 HDi	04/2002	→	
JUMPER Pianale piatto/Telaio (230)-2.8 HDi	09/2000	→	02/2002
JUMPER Pianale piatto/Telaio (244)-2.8 HDi	04/2002	→	
FIAT			
DUCATO Autobus (244, Z_)-2.3 JTD	04/2002	→	08/2006
DUCATO Autobus (244, Z_)-2.8 JTD	04/2002	→	08/2006
DUCATO Furgonato (244)-2.3 JTD	04/2002	→	08/2006
DUCATO Furgonato (244)-2.8 JTD	04/2002	→	08/2006
DUCATO Pianale piatto/Telaio (244)-2.3 JTD	04/2002	→	08/2006
DUCATO Pianale piatto/Telaio (244)-2.8 JTD	04/2002	→	08/2006
PEUGEOT			
BOXER Autobus (244, Z_)-2.8 HDi	04/2002	→	05/2006
BOXER Furgonato (244)-2.8 HDi	04/2002	→	05/2006
BOXER Pianale piatto/Telaio (244)-2.8 HDi	04/2002	→	05/2006

063521093070 MSN2009 2,3kW 12V

IVECO			
DAILY II Cassone / Furgonato / Promiscuo-29 L 11 V	05/1999	→	12/2001
DAILY II Cassone / Furgonato / Promiscuo-29 L 12 V (ALKA41A2, ALLA52A2, ALKA42A2)	09/2002	→	03/2006
DAILY II Cassone / Furgonato / Promiscuo-29 L 9 V	05/1999	→	09/2002




063521093070 MSN2009 2,3kW 12V

IVECO

DAILY II Cassone / Furgonato / Promiscuo-35 C 12 V, 35 S 12 V (AGKA43A2, AGKB43A2, AGKB46A2, AGKC43A2)	09/2002 → 03/2006
DAILY II Cassone / Furgonato / Promiscuo-35 S 10 (ANJA41A1, ANJA42A2, ANJA42AB, ANJA43A, ANJAV1A, AGJ..)	09/2002 → 09/2004
DAILY II Cassone / Furgonato / Promiscuo-35 S 11 V,35 C 11 V	05/1999 → 03/2006
DAILY II Cassone / Furgonato / Promiscuo-35 S 13 V,35 C 13 V	05/1999 → 03/2006
DAILY II Cassone / Furgonato / Promiscuo-35 S 15 V, 35 C 15 V (A6HCV3B2, A6HBV4B2, A6HC41B2, A6HC42B2)	11/2002 → 03/2006
DAILY II Cassone / Furgonato / Promiscuo-35 S 9 V,35 C 9 V	05/1999 → 05/1999
DAILY II Cassone / Furgonato / Promiscuo-50 C 11	05/1999 → 09/2004
DAILY II Cassone / Furgonato / Promiscuo-50 C 13	05/1999 → 05/1999
DAILY II Pianale piatto/Telaio-29 L 10 (ALJA-V1A1, ALJA41AA, ALJA41A1, AHJA64A1, AHJA14A1, A..)	09/2002 → 03/2006
DAILY II Pianale piatto/Telaio-29 L 11	05/1999 → 12/2001
DAILY II Pianale piatto/Telaio-29 L 12 (ALKA41A1, AHKA64A1, ALLA51A1)	09/2002 → 03/2006
DAILY II Pianale piatto/Telaio-29 L 13	11/2001 → 03/2006
DAILY II Pianale piatto/Telaio-29 L 9	05/1999 → 09/2002
DAILY II Pianale piatto/Telaio-35 C 10 V , 35 S 10 V (AMJA11A1, AMJA14A1, AMJA64A1, AMJA65A..)	09/2002 → 03/2006
DAILY II Pianale piatto/Telaio-35 C 12 , 35 S 12 (AEKA14A1, AEKA14AA, AEKA64A1, AEKB11A1, A..)	09/2002 → 03/2006
DAILY II Pianale piatto/Telaio-35 C 15	11/2001 → 03/2006
DAILY II Pianale piatto/Telaio-35 S 11,35 C 11	05/1999 → 03/2006
DAILY II Pianale piatto/Telaio-35 S 13,35 C 13	05/1999 → 03/2006
DAILY II Pianale piatto/Telaio-35 S 9,35 C 9	05/1999 → 05/1999
DAILY II Pianale piatto/Telaio-50 C 11	05/1999 → 09/2004
DAILY II Pianale piatto/Telaio-50 C 13	05/1999 → 05/1999
DAILY II Pianale piatto/Telaio-50 C 15	05/2001 → 09/2004
DAILY II Pianale piatto/Telaio-65 C 15	11/2001 → 09/2004
DAILY III Cassone / Furgonato / Promiscuo-29L10 V	05/2006 → 05/2006
DAILY III Cassone / Furgonato / Promiscuo-29L12 V, 29L12 V/P	05/2006 → 05/2006
DAILY III Cassone / Furgonato / Promiscuo-29L14 C, 29L14 C/P, 29L14 V, 29L14 V/P	05/2006 → 05/2006

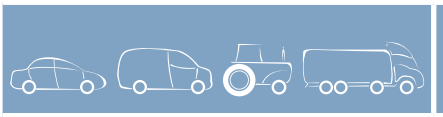


063521093070 MSN2009 2,3kW 12V

IVECO

DAILY III Cassone / Furgonato / Promiscuo-35C10, 35S10	05/2006 → 05/2006
DAILY III Cassone / Furgonato / Promiscuo-35C12 V, 35C12 V/P, 35S12 V, 35S12 V/P	05/2006 → 05/2006
DAILY III Cassone / Furgonato / Promiscuo-35C15 V, 35C15 V/P	05/2006 → 05/2006
DAILY III Cassone / Furgonato / Promiscuo-35C18 V, 35C18 V/P, 35S18 V, 35S18 V/P	05/2006 → 05/2006
DAILY III Cassone / Furgonato / Promiscuo-35S14 C, 35S14 C/P, 35S14 V, 35S14 V/P, 35C14 V, 35C14 V/P	05/2006 → 05/2006
DAILY III Cassone / Furgonato / Promiscuo-40C15 V, 40C15 V/P	05/2006 → 05/2006
DAILY III Cassone / Furgonato / Promiscuo-40C18 V, 40C18 V/P	05/2006 → 05/2006
DAILY III Cassone / Furgonato / Promiscuo-50C15	05/2006 → 05/2006
DAILY III Cassone / Furgonato / Promiscuo-50C18	05/2006 → 05/2006
DAILY III Cassone / Furgonato / Promiscuo-60C18	05/2006 → 05/2006
DAILY III Cassone / Furgonato / Promiscuo-65C18	05/2006 → 05/2006
DAILY III Pianale piatto/Telaio-29L10	05/2006 → 05/2006
DAILY III Pianale piatto/Telaio-29L12	05/2006 → 05/2006
DAILY III Pianale piatto/Telaio-29L14	05/2006 → 05/2006
DAILY III Pianale piatto/Telaio-35C10, 35S10	05/2006 → 05/2006
DAILY III Pianale piatto/Telaio-35C12, 35S12	05/2006 → 05/2006
DAILY III Pianale piatto/Telaio-35C15	05/2006 → 05/2006
DAILY III Pianale piatto/Telaio-35C18, 35S18	05/2006 → 05/2006
DAILY III Pianale piatto/Telaio-35S14	05/2006 → 05/2006
DAILY III Pianale piatto/Telaio-40C15	05/2006 → 05/2006
DAILY III Pianale piatto/Telaio-40C18	05/2006 → 05/2006
DAILY III Pianale piatto/Telaio-50C15	05/2006 → 05/2006
DAILY III Pianale piatto/Telaio-50C18	05/2006 → 05/2006
DAILY III Pianale piatto/Telaio-60C18	05/2006 → 05/2006
DAILY III Pianale piatto/Telaio-65C18	05/2006 → 05/2006
DAILY III Ribaltabile-35C10 K	05/2006 → 05/2006
DAILY III Ribaltabile-35C12	05/2006 → 05/2006
DAILY III Ribaltabile-35C15	05/2006 → 05/2006
DAILY III Ribaltabile-35C18	05/2006 → 05/2006
DAILY III Ribaltabile-50C15	05/2006 → 05/2006
DAILY III Ribaltabile-50C18	05/2006 → 05/2006
DAILY III Ribaltabile-60C18	05/2006 → 05/2006




063521093570 MSN2120 2,3kW 12V			
VM MOTORI			
Diversi modelli-Tutte		→	
063521100250 MSN2027 1,7kW 12V			
FIAT			
DUNA (146 B)-DS 1.7	01/1987	→	12/1990
DUNA Weekend (146 B)-DS 1.7	01/1987	→	12/1990
FIORINO (147)-1.7 Diesel	01/1988	→	03/1992
FIORINO Furgonato (146 Uno)-1.7 D	01/1988	→	12/1990
FIORINO Furgonato (146 Uno)-60 1.7 D	05/1988	→	03/1992
FIORINO Pick up (146)-1.7 D	05/1988	→	12/1990
PENNY VAN (257)-1.7 D	10/1986	→	12/1990
REGATA (138)-60 Diesel 1.7	09/1983	→	03/1989
REGATA Weekend-60 Diesel 1.7	09/1987	→	03/1989
RITMO I (138A)-55 Diesel 1.7	10/1979	→	09/1982
RITMO II (138A)-60 Diesel 1.7	10/1982	→	12/1987
TIPO (160)-1.7 D (160.AG)	07/1987	→	09/1991
UNO (146A/E)-1.3 Super Diesel	06/1983	→	03/1992
UNO (146A/E)-60 Diesel 1.7	07/1986	→	09/1991
UNO (146A/E)-70 TD 1.4	10/1986	→	10/1990
063521101040 MSN2086 1,9kW 12V			
FORD			
ESCORT '81 Express (AVA)-1.6 D	04/1984	→	12/1985
ESCORT '86 Express (AVF)-1.6 D	02/1986	→	12/1988
ESCORT '86 Express (AVF)-1.8 D	01/1989	→	07/1990
ESCORT '95 Furgonato (AVL)-1.8 D	01/1995	→	09/2001
ESCORT '95 Furgonato (AVL)-1.8 Turbo D	12/1995	→	06/2001
ESCORT CLASSIC (AAL, ABL)-1.8 TD	10/1998	→	07/2000
ESCORT CLASSIC Turnier (ANL)-1.8 TD	02/1999	→	07/2000
ESCORT III (GAA)-1.6 D	02/1984	→	12/1985
ESCORT III Station wagon (AWA)-1.6 D	02/1984	→	12/1985
ESCORT IV (GAF, AWF, ABFT)-1.6 D	01/1986	→	12/1988
ESCORT IV (GAF, AWF, ABFT)-1.8 D	01/1989	→	07/1990
ESCORT IV Station wagon (AWF, AVF)-1.6 D	01/1986	→	12/1988
ESCORT IV Station wagon (AWF, AVF)-1.8 D	01/1989	→	07/1990
ESCORT VI (GAL)-1.8 TD	06/1993	→	12/1994
ESCORT VI Station wagon (GAL)-1.8 TD	06/1993	→	12/1994
ESCORT VI Tre volumi (GAL)-1.8 TD	08/1993	→	12/1994
ESCORT VII (GAL, AAL, ABL)-1.8 D	01/1995	→	12/1996
ESCORT VII (GAL, AAL, ABL)-1.8 TD	01/1995	→	10/1998
ESCORT VII (GAL, AAL, ABL)-1.8 Turbo D	12/1995	→	10/1998
ESCORT VII Cabriolet (ALL)-1.8 TD	09/1995	→	08/1998
ESCORT VII Cabriolet (ALL)-1.8 Turbo D	10/1996	→	08/1999
ESCORT VII Station wagon (GAL, ANL)-1.8 D	01/1995	→	02/1999
ESCORT VII Station wagon (GAL, ANL)-1.8 TD	01/1995	→	02/1999
ESCORT VII Station wagon (GAL, ANL)-1.8 Turbo D	12/1995	→	02/1999




063521101040 MSN2086 1,9kW 12V			
FORD			
ESCORT VII Tre volumi (GAL, AFL)-1.8 D	01/1995	→	12/1996
ESCORT VII Tre volumi (GAL, AFL)-1.8 TD	01/1995	→	10/1998
ESCORT VII Tre volumi (GAL, AFL)-1.8 Turbo D	12/1995	→	02/1999
FIESTA Furgonato (FVD)-1.6 D	04/1984	→	02/1989
FIESTA Furgonato (FVD)-1.8 D (FVJ)	03/1989	→	12/1995
FIESTA Furgonato (J5_, J3_)-1.8 D	02/1996	→	06/2001
FIESTA Furgonato (JV_)-D 1.8	05/1998	→	06/2001
FIESTA II (FBD)-1.6 D (FBD)	04/1984	→	02/1989
FIESTA III (GFJ)-1.8 D	03/1989	→	12/1995
FIESTA IV (JA_, JB_)-1.8 D	10/1995	→	04/2000
MONDEO I (GBP)-1.8 TD	06/1993	→	07/1996
MONDEO I Station wagon (BNP)-1.8 TD	06/1993	→	07/1996
MONDEO I Tre volumi (GBP)-1.8 TD	06/1993	→	07/1996
ORION I (AFD)-1.6 D	04/1984	→	12/1985
ORION II (AFF)-1.6 D	04/1986	→	01/1989
ORION II (AFF)-1.8 D	01/1989	→	07/1990
ORION III (GAL)-1.8 TD	03/1993	→	12/1993
063521101060 MSN2028 1,7kW 12V			
AUDI			
80 (89, 89Q, 8A, B3)-1.6 D	10/1987	→	07/1988
80 (89, 89Q, 8A, B3)-1.6 TD	04/1988	→	08/1991
80 (89, 89Q, 8A, B3)-1.9 D	08/1989	→	08/1991
80 (8C, B4)-1.9 TD	09/1991	→	12/1994
80 (8C, B4)-1.9 TDI	09/1991	→	12/1994
80 Avant (8C, B4)-1.9 TD	09/1991	→	12/1994
80 Avant (8C, B4)-1.9 TDI	08/1992	→	07/1995
90 (89, 89Q, 8A, B3)-1.6 TD	07/1987	→	09/1991
A4 (8D2, B5)-1.9 TDI	01/1995	→	11/2000
A4 (8E2, B6)-1.9 TDI	05/2001	→	12/2004
A4 (8E2, B6)-3.0	11/2000	→	12/2004
A4 (8EC)-1.9 TDI	11/2004	→	
A4 Avant (8D5, B5)-1.9 TDI	02/1996	→	09/2001
A4 Avant (8E5, B6)-1.9 TDI	11/2001	→	12/2004
A4 Avant (8E5, B6)-3.0	09/2001	→	12/2004
A4 Avant (8ED)-1.9 TDI	11/2004	→	
A4 Cabriolet (8H7, 8HE)-3.0 quattro	05/2003	→	12/2005
A6 (4A, C4)-1.9 TDI	06/1994	→	05/2004
A6 Avant (4A, C4)-1.9 TDI	07/1994	→	10/1997
A6 Avant (4B, C5)-1.9 TDI	02/1998	→	01/2005
CABRIOLET (8G7, B4)-1.9 TDI	07/1995	→	08/2000
BMW			
02 (E10)-1802	05/1971	→	07/1975
SKODA			
SUPERB (3U4)-1.9 TDI	02/2002	→	03/2008

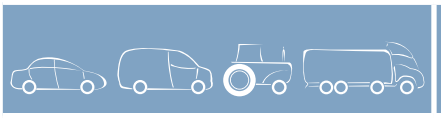


063521101060 MSN2028 1,7kW 12V		
VW		
PASSAT (3B2)-1.9 TDI	10/1996 →	11/2000
PASSAT (3B3)-1.9 TDI	11/2000 →	05/2005
PASSAT (3B3)-2.0 TDI	12/2003 →	05/2005
PASSAT Variant (3B5)-1.9 TDI	06/1997 →	11/2000
PASSAT Variant (3B6)-1.9 TDI	11/2000 →	05/2005
PASSAT Variant (3B6)-2.0 TDI	12/2003 →	05/2005
063521101250 MSN2003 1,7kW 12V		
FIAT		
FIORINO Furgonato (146 Uno)-1.7 D	04/1992 →	05/1999
FIORINO Furgonato (146 Uno)-60 1.7 D	05/1988 →	03/1992
FIORINO Furgonato (146 Uno)-65 1.7 TD	02/1997 →	05/1999
FIORINO Pick up (146)-1.7 D	10/1993 →	05/1999
FIORINO Pick up (146)-1.7 TD	02/1997 →	05/1999
TIPO (160)-1.7 D (160.AG)	01/1988 →	10/1995
063521101380 MSN2088 1,8kW 12V		
AUDI		
80 (8C, B4)-1.9 TD	09/1991 →	12/1994
80 (8C, B4)-1.9 TDI	09/1991 →	12/1994
063521101380 MSN2088 1,8kW 12V		
AUDI		
80 Avant (8C, B4)-1.9 TD	07/1993 →	12/1994
80 Avant (8C, B4)-1.9 TDI	08/1992 →	07/1995
A4 (8E2, B6)-1.9 TDI	05/2001 →	12/2004
A4 (8E2, B6)-3.0	12/2000 →	12/2004
A4 (8EC)-1.9 TDI	11/2004 →	11/2005
A4 Avant (8E5, B6)-1.9 TDI	11/2001 →	12/2004
A4 Avant (8E5, B6)-3.0	09/2001 →	12/2004
A4 Avant (8ED)-1.9 TDI	11/2004 →	12/2005
A4 Cabriolet (8H7, 8HE)-3.0	04/2002 →	12/2005
A6 (4B, C5)-1.9 TDI	04/1997 →	04/2001
A6 Avant (4B, C5)-1.9 TDI	07/2000 →	04/2001
SKODA		
SUPERB (3U4)-1.9 TDI	08/2002 →	03/2008
VW		
PASSAT (3B2)-1.9 TDI	10/1996 →	11/2000
PASSAT Variant (3B5)-1.9 TDI	06/1997 →	11/2000
063521120350 MSN2004 0,9kW 12V		
DAEWOO		
ESPERO (KLEJ)-1.5 16V	10/1993 →	06/1999
OPEL		
AGILA (H00)-1.2 16V	09/2000 →	
ASTRA F (56_, 57_)-1.4	09/1991 →	09/1993
ASTRA F (56_, 57_)-1.6	09/1995 →	09/1998
ASTRA F (56_, 57_)-1.6 i	03/1992 →	07/1996

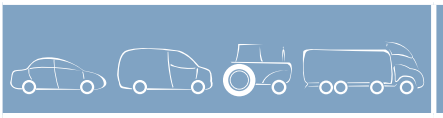


063521120350 MSN2004 0,9kW 12V		
OPEL		
ASTRA F (56_, 57_)-1.6 i 16V	08/1994 →	09/1998
ASTRA F (56_, 57_)-1.6 Si	05/1992 →	12/1994
ASTRA F 2 volumi /Coda spiovente (53_, 54_, 58_, 59_)-1.6	09/1995 →	01/1998
ASTRA F 2 volumi /Coda spiovente (53_, 54_, 58_, 59_)-1.6 i	09/1991 →	01/1998
ASTRA F 2 volumi /Coda spiovente (53_, 54_, 58_, 59_)-1.6 i 16V	08/1994 →	01/1998
ASTRA F 2 volumi /Coda spiovente (53_, 54_, 58_, 59_)-1.6 Si	03/1992 →	12/1994
ASTRA F Cabriolet (53_B)-1.6 i	03/1993 →	12/1998
ASTRA F CLASSIC 2 volumi /Coda spiovente-1.4 i	01/1998 →	08/2002
ASTRA F CLASSIC 2 volumi /Coda spiovente-1.6 i	01/1998 →	08/2002
ASTRA F CLASSIC 2 volumi /Coda spiovente-1.6 i 16V	01/1998 →	08/2002
ASTRA F CLASSIC Station wagon-1.4 i	01/1998 →	01/2005
ASTRA F CLASSIC Station wagon-1.6 i	01/1998 →	01/2005
ASTRA F CLASSIC Station wagon-1.6 i 16V	01/1998 →	01/2005
ASTRA F CLASSIC Tre volumi-1.4 i	01/1998 →	08/2002
ASTRA F CLASSIC Tre volumi-1.6 i	01/1998 →	08/2002
ASTRA F CLASSIC Tre volumi-1.6 i 16V	01/1998 →	08/2002
ASTRA F Station wagon (51_, 52_)-1.4	09/1991 →	09/1993
ASTRA F Station wagon (51_, 52_)-1.6 i	09/1991 →	01/1998
ASTRA F Station wagon (51_, 52_)-1.6 i 16V	08/1994 →	01/1998
ASTRA F Station wagon (51_, 52_)-1.6 Si	03/1992 →	12/1994
ASTRA F Van (55_)-1.6 i	10/1991 →	07/1996
ASTRA G 2 volumi /Coda spiovente (F48_, F08_)-1.2 16V	02/1998 →	01/2005
ASTRA G 2 volumi /Coda spiovente (F48_, F08_)-1.4 16V	02/1998 →	01/2005
ASTRA G 2 volumi /Coda spiovente (F48_, F08_)-1.6	02/1998 →	01/2005
ASTRA G 2 volumi /Coda spiovente (F48_, F08_)-1.6 16V	02/1998 →	01/2005
ASTRA G Cabriolet-1.6 16V	03/2001 →	10/2005
ASTRA G Furgonato (F70)-1.6	01/1999 →	04/2005
ASTRA G Station wagon (F35_)-1.2 16V	02/1998 →	07/2004
ASTRA G Station wagon (F35_)-1.4 16V	06/1998 →	07/2004
ASTRA G Station wagon (F35_)-1.6	02/1998 →	07/2004
ASTRA G Station wagon (F35_)-1.6 16V	02/1998 →	07/2004
ASTRA G Station wagon (F35_)-1.6 CNG	03/2003 →	07/2004
ASTRA G Tre volumi (F69_)-1.2 16V	09/1998 →	01/2005





063521120350 MSN2004 0,9kW 12V

OPEL			
ASTRA G Tre volumi (F69_)-1.4 16V	09/1998	→	01/2005
ASTRA G Tre volumi (F69_)-1.6	09/1998	→	01/2005
ASTRA G Tre volumi (F69_)-1.6 16V	09/1998	→	01/2005
COMBO (71_)-1.2	07/1994	→	10/2001
COMBO (71_)-1.4	07/1994	→	10/2001
COMBO (71_)-1.4 16V	08/1999	→	10/2001
COMBO Cassone / Furgonato / Promiscuo-1.6	10/2001	→	
COMBO Tour-1.6	10/2001	→	
CORSA A 2 volumi /Coda spiovente (93_, 94_, 98_, 99_)-1.6 GSI	05/1988	→	03/1993
CORSA B (73_, 78_, 79_)-1.2 i	03/1993	→	09/2000
CORSA B (73_, 78_, 79_)-1.2 i 16V	03/1998	→	09/2000
CORSA B (73_, 78_, 79_)-1.4 i	03/1993	→	09/2000
CORSA B (73_, 78_, 79_)-1.4 i 16V	09/1994	→	09/2000
CORSA B (73_, 78_, 79_)-1.4 Si	03/1993	→	09/2000
CORSA B (73_, 78_, 79_)-1.6 GSI 16V	03/1993	→	09/2000
CORSA B (73_, 78_, 79_)-1.6 i 16V	09/1994	→	09/2000
CORSA C (F08, F68)-1.2	09/2000	→	
CORSA C (F08, F68)-1.4	09/2000	→	
CORSA C Furgonato (F08, W5L)-1.2 16V	09/2000	→	
KADETT E (39_, 49_)-1.6 i	09/1988	→	08/1991
KADETT E (39_, 49_)-1.6 i Cat.	09/1988	→	08/1991
KADETT E (39_, 49_)-1.6 S	09/1984	→	08/1991
KADETT E 2 volumi /Coda spiovente (33_, 34_, 43_, 44_)-1.6 i	09/1988	→	08/1991
KADETT E 2 volumi /Coda spiovente (33_, 34_, 43_, 44_)-1.6 S	09/1984	→	08/1991
KADETT E Cabriolet (43B_)-1.6 i	09/1988	→	12/1991
KADETT E Combo (38_, 48_)-1.6	09/1988	→	12/1991
KADETT E Furgonato (37_, 47_)-1.6 i	08/1989	→	12/1991
KADETT E Station wagon (35_, 36_, 45_, 46_)-1.6	09/1986	→	08/1991
KADETT E Station wagon (35_, 36_, 45_, 46_)-1.6 i	09/1988	→	08/1991
KADETT E Station wagon (35_, 36_, 45_, 46_)-1.6 S	09/1984	→	08/1986
MERIVA-1.6	05/2003	→	05/2010
MERIVA-1.6 16V	05/2003	→	05/2010
TIGRA (95_)-1.4 16V	07/1994	→	12/2000
TIGRA (95_)-1.6 16V	07/1994	→	08/1998
VECTRA A (86_, 87_)-1.4 S	09/1988	→	06/1992
VECTRA A (86_, 87_)-1.6	09/1988	→	05/1993
VECTRA A (86_, 87_)-1.6 i	09/1988	→	12/1994





063521120350 MSN2004 0,9kW 12V

OPEL			
VECTRA A 2 volumi /Coda spiovente (88_, 89_)-1.4 S	04/1988	→	06/1992
VECTRA A 2 volumi /Coda spiovente (88_, 89_)-1.6 i	09/1988	→	11/1995
VECTRA A 2 volumi /Coda spiovente (88_, 89_)-1.6 S	09/1988	→	05/1993
VECTRA B (36_)-1.6 i	10/1995	→	04/2002
VECTRA B (36_)-1.6 i 16V	10/1995	→	04/2002
VECTRA B 2 volumi /Coda spiovente (38_)-1.6 i	10/1995	→	07/2003
VECTRA B 2 volumi /Coda spiovente (38_)-1.6 i 16V	10/1995	→	07/2002
VECTRA B Station wagon (31_)-1.6 i	11/1996	→	06/2000
VECTRA B Station wagon (31_)-1.6 i 16V	11/1996	→	07/2002
VECTRA C-1.6 16V	06/2004	→	
ZAFIRA (F75_)-1.6 16V	04/1999	→	06/2005
ZAFIRA (F75_)-1.6 CNG	09/2001	→	06/2005
VAUXHALL			
AGILA Mk I (A)-1.2 16V	09/2000	→	
ASTRA Mk II 2 volumi /Coda spiovente-1.6	01/1988	→	08/1991
ASTRA Mk II Belmont-1.6	01/1988	→	08/1991
ASTRA Mk II Belmont-1.6 S	01/1989	→	12/1991
ASTRA Mk II Cabriolet-1.6 i	01/1988	→	08/1993
ASTRA Mk II Station wagon-1.6	01/1988	→	08/1991
ASTRA Mk IV (G)-1.2 16V	09/1998	→	
ASTRA Mk IV (G)-1.4 16V	09/1998	→	
ASTRA Mk IV (G)-1.6	09/1998	→	
ASTRA Mk IV (G)-1.6 16V	09/1998	→	
ASTRA Mk IV (G)-1.6 Dualfuel	09/2002	→	
ASTRA Mk IV (G) 2 volumi /Coda spiovente-1.2 16V	02/1998	→	
ASTRA Mk IV (G) 2 volumi /Coda spiovente-1.4 16V	02/1998	→	
ASTRA Mk IV (G) 2 volumi /Coda spiovente-1.6	02/1998	→	
ASTRA Mk IV (G) 2 volumi /Coda spiovente-1.6 16V	02/1998	→	
ASTRA Mk IV (G) 2 volumi /Coda spiovente-1.6 Dualfuel	09/2002	→	
ASTRA Mk IV (G) Cabriolet-1.6 16V	03/2001	→	
ASTRA Mk IV (G) Station wagon-1.2 16V	02/1998	→	
ASTRA Mk IV (G) Station wagon-1.4 16V	02/1998	→	
ASTRA Mk IV (G) Station wagon-1.6	03/1998	→	04/2004
ASTRA Mk IV (G) Station wagon-1.6 16V	03/1998	→	04/2004

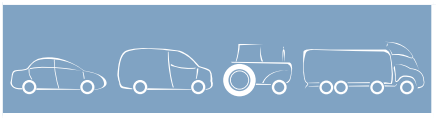


063521120350 MSN2004 0,9kW 12V

VAUXHALL	
ASTRA Mk IV (G) Station wagon-1.6 Dualfuel	03/1998 → 04/2004
ASTRAVAN Mk IV (G)-1.6 i	08/1998 →
CAVALIER Mk II 2 volumi /Coda spiovente-1.3 S	09/1981 → 08/1988
CAVALIER Mk III (87)-1.4 S	09/1988 → 11/1995
CAVALIER Mk III (87)-1.6	09/1988 → 05/1993
CAVALIER Mk III (87)-1.6 i	09/1988 → 11/1995
CAVALIER Mk III 2 volumi /Coda spiovente-1.4 S	09/1988 → 11/1995
CAVALIER Mk III 2 volumi /Coda spiovente-1.6	09/1988 → 05/1993
CAVALIER Mk III 2 volumi /Coda spiovente-1.6 i	09/1988 → 11/1995
COMBO Mk I (B)-1.2	07/1994 → 10/2001
COMBO Mk I (B)-1.4	07/1994 → 10/2001
COMBO Mk II (C)-1.6	10/2001 →
CORSA Cabriolet-1.4 i 16V	01/1998 →
CORSA Mk II (B)-1.2 i	03/1993 → 09/2000
CORSA Mk II (B)-1.2 i 16V	03/1998 → 09/2000
CORSA Mk II (B)-1.4 i	03/1993 → 09/2000
CORSA Mk II (B)-1.4 i 16V	09/1994 → 09/2000
CORSA Mk II (B)-1.4 i S	03/1993 → 09/2000
CORSA Mk II (B)-1.6 GSI 16V	03/1993 → 09/2000
CORSA Mk II (B)-1.6 i 16V	09/1994 → 09/2000
CORSA Mk III (C)-1.2 16V	09/2000 →
CORSA Mk III (C)-1.2 16V Dualfuel	08/2001 →
CORSA Mk III (C)-1.4 16V	09/2000 →
CORSAVAN Mk II (B)-1.4 i	01/1994 → 09/2000
CORSAVAN Mk III (C)-1.2 16V	09/2000 →
CORSAVAN Mk III (C)-1.2 16V Dualfuel	08/2001 →
MERIVA Mk I (A)-1.6 i	01/2003 → 10/2009
MERIVA Mk I (A)-1.6 i 16V	01/2003 → 10/2009
NOVA 2 volumi /Coda spiovente-1.6 GSI	05/1988 → 03/1993
TIGRA Mk I-1.4 16V	07/1994 → 12/2000
TIGRA Mk I-1.6 16V	07/1994 → 12/2000
VECTRA (B)-1.6 i	08/1995 → 10/2001
VECTRA (B)-1.6 i 16V	08/1995 → 10/2001
VECTRA (B) 2 volumi /Coda spiovente-1.6 i 16V	08/1995 → 10/2001
VECTRA (B) Station wagon-1.6 i	11/1996 →
VECTRA (B) Station wagon-1.6 i 16V	11/1996 →
ZAFIRA Mk I (A)-1.6 16V	04/1999 →

063521120380 MSN2089 0,9kW 12V

AUDI	
A3 (8L1)-1.6	09/1996 → 06/1998

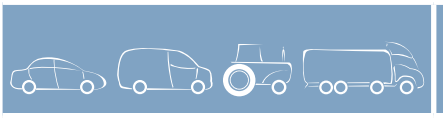


063521120380 MSN2089 0,9kW 12V

AUDI	
A3 (8L1)-1.8	09/1996 → 06/1998
A3 (8L1)-1.8 T	12/1996 → 06/1998
FORD	
GALAXY (WGR)-2.0 i	11/1995 → 06/1998
VW	
CADDY I (14)-1.6	08/1983 → 07/1992
GOLF I Cabriolet (155)-1.6	08/1983 → 04/1992
GOLF II (19E, 1G1)-1.6	08/1983 → 10/1991
JETTA II (19E, 1G2)-1.6	01/1984 → 07/1992

063521120410 MSN2029 1,0kW 12V

CITROEN	
AX (ZA-_)-10	04/1991 → 03/1997
AX (ZA-_)-11	04/1991 → 03/1997
AX (ZA-_)-14	01/1988 → 12/1996
AX (ZA-_)-1.3 Sport	04/1987 → 12/1988
AX (ZA-_)-1.4 GTi	06/1991 → 12/1996
BERLINGO (MF)-1.1 i (MFHDZ)	07/1996 → 11/2002
BERLINGO (MF)-1.4 i (MFKFX)	07/1996 → 11/2002
BERLINGO (MF)-1.6 16V (MFNFU)	10/2000 → 11/2002
BERLINGO Furgonato (M_)-1.1 i (MAHDZ, MBHDZ)	07/1996 → 11/2002
BERLINGO Furgonato (M_)-1.4 i (MBKFX)	07/1996 → 11/2002
BERLINGO Furgonato (M_)-1.6 16V	10/2000 → 11/2002
C2 (JM_)-1.1	09/2003 →
C2 (JM_)-1.4	09/2003 →
C2 (JM_)-1.6	09/2003 →
C3 (FC_)-1.1 i	02/2002 → 08/2005
C3 (FC_)-1.4 16V	09/2005 → 09/2009
C3 (FC_)-1.4 i	02/2002 → 08/2005
C3 (FC_)-1.4 i Bivalent	02/2002 → 08/2005
C3 (FC_)-1.6 16V	02/2002 → 08/2005
C3 Pluriel (HB_)-1.4	05/2003 →
C3 Pluriel (HB_)-1.4 Hybrid	05/2005 →
C3 Pluriel (HB_)-1.6	05/2003 →
C4 (LC_)-1.6 16V Bio-Flex	09/2007 → 07/2008
SAXO (S0, S1)-1.0 X	05/1996 → 09/2003
SAXO (S0, S1)-1.1 X,SX	05/1996 → 09/2003
SAXO (S0, S1)-1.4 VTS	05/1996 → 09/2003
SAXO (S0, S1)-1.6	02/1996 → 06/2003
XSARA (N1)-1.4 i	07/1997 → 08/2000
XSARA (N1)-1.6 16V	09/2000 → 03/2005
XSARA (N1)-1.6 i	07/1997 → 08/2000
XSARA Break (N2)-1.4 i	04/1998 → 08/2000
XSARA Break (N2)-1.6 16V	09/2000 → 08/2005




063521120410 MSN2029 1,0kW 12V

CITROEN			
XSARA Break (N2)-1.6 i	10/1997	→	08/2000
XSARA Coupe (N0)-1.4 i	03/1998	→	08/2000
XSARA Coupe (N0)-1.6 16V	09/2000	→	03/2005
XSARA Coupe (N0)-1.6 i	02/1998	→	09/2000
XSARA Coupe (N0)-1.8 i 16V	02/1998	→	09/2000
XSARA PICASSO (N68)-1.6	09/2000	→	
XSARA PICASSO (N68)-1.6	01/2000	→	
XSARA PICASSO (N68)-1.6 16V	09/2005	→	
XSARA PICASSO (N68)-1.6 Chrono	04/2001	→	10/2004
ZX (N2)-1.1	10/1991	→	03/1994
ZX (N2)-1.4	03/1991	→	06/1997
ZX (N2)-1.4 i	08/1992	→	08/1996
ZX Break (N2)-1.4 i	10/1993	→	08/1996
FIAT			
FIORINO Cassone / Furgonato / Promiscuo-1.4	02/2008	→	
QUBO-1.4	09/2008	→	
PEUGEOT			
1007 (KM_)-1.4	04/2005	→	

063521120410 MSN2029 1,0kW 12V

PEUGEOT			
1007 (KM_)-1.6 16V	04/2005	→	
106 I (1A, 1C)-1.0	07/1992	→	04/1996
106 I (1A, 1C)-1.1	09/1991	→	12/1993
106 I (1A, 1C)-1.3	10/1993	→	04/1996
106 I (1A, 1C)-1.4	09/1991	→	04/1996
106 I (1A, 1C)-1.6	06/1993	→	04/1996
106 II (1)-1.0 i	05/1996	→	05/2005
106 II (1)-1.1 i	05/1996	→	05/2005
106 II (1)-1.4 i	05/1996	→	05/2005
106 II (1)-1.6 i	05/1996	→	05/2005
106 II (1)-1.6 S16	05/1996	→	05/2005
205 I Cabriolet (741B, 20D)-1.1 CJ	10/1989	→	01/1992
205 I Cabriolet (741B, 20D)-1.4	08/1987	→	12/1989
205 I Cabriolet (741B, 20D)-1.4 CJ	03/1989	→	01/1992
205 II (20A/C)-1.0	10/1987	→	01/1992
205 II (20A/C)-1.1	10/1987	→	01/1992
205 II (20A/C)-1.3 Rallye	10/1987	→	10/1990
205 II (20A/C)-1.4	06/1987	→	07/1998
206 2 volumi /Coda spiovente (2A/C)-1.1	08/1998	→	07/2000
206 2 volumi /Coda spiovente (2A/C)-1.1 i	09/1998	→	10/2005
206 2 volumi /Coda spiovente (2A/C)-1.4 i	09/1998	→	02/2009
206 2 volumi /Coda spiovente (2A/C)-1.4 LPG	05/2006	→	09/2007
206 2 volumi /Coda spiovente (2A/C)-1.6 16V	12/2000	→	08/2007




063521120410 MSN2029 1,0kW 12V

PEUGEOT			
206 2 volumi /Coda spiovente (2A/C)-1.6 i	09/1998	→	12/2000
206 CC (2D)-1.6 16V	09/2000	→	03/2007
206 SW (2E/K)-1.1	07/2002	→	10/2005
206 SW (2E/K)-1.4	07/2002	→	12/2006
206 SW (2E/K)-1.6 16V	07/2002	→	12/2006
306 (7B, N3, N5)-1.1	06/1994	→	04/1997
306 (7B, N3, N5)-1.4 SL	06/1994	→	04/1997
306 (7B, N3, N5)-1.6	10/2000	→	05/2001
306 (7B, N3, N5)-1.6 SR	06/1994	→	04/1997
306 (7B, N3, N5)-2.0 S16	06/1994	→	05/2001
306 2 volumi /Coda spiovente (7A, 7C, N3, N5)-1.1	05/1993	→	04/1997
306 2 volumi /Coda spiovente (7A, 7C, N3, N5)-1.4	05/1993	→	04/1997
306 2 volumi /Coda spiovente (7A, 7C, N3, N5)-1.6	05/1993	→	05/2001
306 Break (7E, N3, N5)-1.4	05/1997	→	03/2002
306 Break (7E, N3, N5)-1.6	05/1997	→	03/2002
306 Cabriolet (7D, N3, N5)-1.6	04/1996	→	04/2002
307 (3A/C)-1.4	08/2000	→	
307 (3A/C)-1.4 16V	11/2003	→	
307 (3A/C)-1.6 16V	08/2000	→	
307 Break (3E)-1.4	04/2002	→	09/2003
307 Break (3E)-1.6 16V	03/2002	→	05/2005
307 SW (3H)-1.6 16V	03/2002	→	
309 II (3C, 3A)-1.1	10/1990	→	12/1993
309 II (3C, 3A)-1.4	07/1990	→	12/1993
405 I (15B)-1.4	07/1987	→	06/1988
405 I Break (15E)-1.4	06/1991	→	07/1992
405 II (4B)-1.4	08/1992	→	10/1995
405 II Break (4E)-1.4	08/1992	→	10/1996
PARTNER Combispace (5F)-1.1	07/1996	→	08/2002
PARTNER Combispace (5F)-1.4	07/1996	→	08/2002
PARTNER Combispace (5F)-1.6 16V	07/2001	→	08/2002
PARTNER Furgonato (5)-1.1	07/1996	→	08/2002
PARTNER Furgonato (5)-1.4	07/1996	→	08/2002
PARTNER Furgonato (5)-1.6	09/2000	→	08/2002

063521120440 MSN2090 0,9kW 12V

SEAT			
AROSA (6H)-1.0	05/1997	→	06/2004
AROSA (6H)-1.4	05/1997	→	06/2004
VW			
LUPO (6X1, 6E1)-1.0	10/1998	→	05/2000
LUPO (6X1, 6E1)-1.4	10/2000	→	07/2005

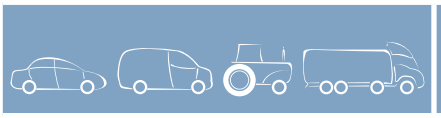


063521120440 MSN2090 0,9kW 12V

VW		
POLO (6N1)-50 1.0	09/1996 →	10/1999
POLO (6N1)-60 1.4	05/1997 →	10/1999
POLO (6N2)-1.0	10/1999 →	09/2001
POLO (6N2)-1.4 16V	05/2000 →	12/2000
POLO Tre volumi-1.0	08/1996 →	12/1999

063521130060 MSN2091 0,8kW 12V

FIAT		
CINQUECENTO (170)-1.1 Sporting (170AH)	06/1995 →	01/1998
PALIO (178BX)-1.1	08/2000 →	07/2001
PUNTO (176)-55 1.1	09/1993 →	08/1999
PUNTO (176)-60 1.2	01/1994 →	08/1999
PUNTO (176)-75 1.2	05/1997 →	08/1999
PUNTO Cabriolet (176C)-60 1.2	04/1994 →	08/1999
PUNTO Van (176L)-1.1	05/1997 →	08/1999
PUNTO Van (188AX)-1.2 60	02/2000 →	06/2003
SEICENTO Van (187)-1.1 (187CXB/C)	03/1998 →	12/2003
LANCIA		
Y (840A)-1.1 (840AE)	04/1997 →	06/2000
Y (840A)-1.2 (840AA, 840AF1A)	04/1997 →	06/2000

063521130070 MSN2092 0,8kW 12V

SEAT		
IBIZA II (6K1)-1.0	03/1993 →	03/1995
IBIZA II (6K1)-1.3 i	03/1993 →	07/1994
VW		
GOLF III (1H1)-1.4	11/1991 →	09/1992
GOLF III Variant (1H5)-1.4	07/1993 →	07/1995
VENTO (1H2)-1.4	11/1991 →	09/1992

063521150350 MSN2030 1,4kW 12V

LOMBARDINI		
904-Tutte	01/1995 →	
7LD 665F-Tutte	01/1992 →	
7LD 740F-Tutte	01/1992 →	
8LD 740.2-Tutte	01/1992 →	
9LD 561.2 / 2L-Tutte	01/1992 →	
9LD 561.2 / 2W-Tutte	01/1992 →	
9LD 625.2-Tutte	01/1992 →	
LDW 1003-Tutte	→	
LDW 702-Tutte	→	

063521204000 MSN2093 0,9kW 12Vc

AUDI		
A2 (8Z0)-1.4	06/2002 →	08/2005
A2 (8Z0)-1.6 FSI	06/2002 →	08/2005
SEAT		
CORDOBA (6L2)-1.2	10/2002 →	11/2004

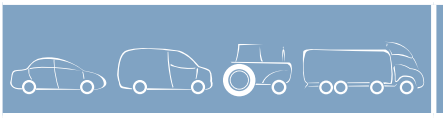


063521204000 MSN2093 0,9kW 12Vc

SEAT		
CORDOBA (6L2)-1.4 16V	09/2002 →	11/2004
CORDOBA (6L2)-1.6	04/2003 →	11/2004
IBIZA IV (6L1)-1.2	08/2002 →	04/2004
IBIZA IV (6L1)-1.4 16V	04/2002 →	10/2004
IBIZA IV (6L1)-1.6	04/2003 →	10/2004
SKODA		
FABIA (6Y2)-1.2	02/2003 →	11/2004
FABIA (6Y2)-1.4 16V	06/2002 →	10/2004
FABIA Combi (6Y5)-1.2	08/2002 →	11/2004
FABIA Combi (6Y5)-1.4 16V	06/2002 →	10/2004
FABIA Praktik-1.2	02/2003 →	11/2004
FABIA Tre volumi (6Y3)-1.2	08/2002 →	11/2004
FABIA Tre volumi (6Y3)-1.4 16V	06/2002 →	10/2004
VW		
BORA (1J2)-1.6 FSI	07/2002 →	05/2005
BORA Station wagon (1J6)-1.6 FSI	07/2002 →	05/2005
FOX (5Z1, 5Z3)-1.2	04/2005 →	
FOX (5Z1, 5Z3)-1.4	04/2005 →	
GOLF IV (1J1)-1.6 FSI	07/2002 →	05/2004
GOLF IV Variant (1J5)-1.6 FSI	07/2002 →	06/2006
LUPO (6X1, 6E1)-1.6 GTI	09/2000 →	07/2005
NEW BEETLE (9C1, 1C1)-1.4	07/2002 →	
NEW BEETLE Cabriolet (1Y7)-1.4	01/2003 →	09/2010
POLO (9N_)-1.2	05/2004 →	05/2005
POLO (9N_)-1.2 12V	11/2001 →	05/2004
POLO (9N_)-1.4 16V	10/2001 →	05/2005
POLO (9N_)-1.4 FSI	02/2002 →	05/2005
POLO Tre volumi-1.4	07/2003 →	05/2007

063521204060 MSN2094 1,0kW 12V

AUDI		
A3 (8P1)-1.6 FSI	12/2004 →	09/2007
A3 Sportback (8PA)-1.6 FSI	12/2004 →	09/2007
SEAT		
ALTEA (5P1)-1.4 16V	05/2006 →	05/2010
ALTEA XL (5P5, 5P8)-1.4 16V	10/2006 →	05/2010
CORDOBA (6L2)-1.2	12/2004 →	06/2006
CORDOBA (6L2)-1.2 12V	05/2006 →	11/2009
CORDOBA (6L2)-1.4 16V	12/2004 →	11/2009
CORDOBA (6L2)-1.6	12/2004 →	11/2009
CORDOBA (6L2)-1.6 16V	11/2006 →	11/2009
IBIZA IV (6L1)-1.2	11/2004 →	05/2008
IBIZA IV (6L1)-1.2 12V	05/2006 →	11/2009
IBIZA IV (6L1)-1.4 16V	11/2004 →	11/2009
IBIZA IV (6L1)-1.6	11/2004 →	




063521204060 MSN2094 1,0kW 12V

SEAT			
IBIZA IV (6L1)-1.6 16V	11/2006	→	11/2009
IBIZA V (6J5)-1.2	03/2008	→	
IBIZA V (6J5)-1.2 TSI	09/2010	→	
IBIZA V (6J5)-1.4	03/2008	→	06/2011
IBIZA V (6J5)-1.6	05/2008	→	
IBIZA V (6J5)-1.6 LPG	05/2011	→	
IBIZA V SPORTCOUPE (6J1)-1.2	07/2008	→	
IBIZA V SPORTCOUPE (6J1)-1.2 TSI	09/2010	→	
IBIZA V SPORTCOUPE (6J1)-1.4	07/2008	→	05/2011
IBIZA V SPORTCOUPE (6J1)-1.6	07/2008	→	
IBIZA V SPORTCOUPE (6J1)-1.6 LPG	05/2011	→	
IBIZA V ST (6J8)-1.2	05/2010	→	
IBIZA V ST (6J8)-1.2 TSI	09/2010	→	
IBIZA V ST (6J8)-1.4	04/2010	→	
LEON (1P1)-1.4 16V	06/2006	→	05/2010
SKODA			
FABIA-1.2	12/2006	→	
FABIA-1.2 TSI	03/2010	→	
FABIA-1.4	01/2007	→	
FABIA-1.6	04/2007	→	
FABIA (6Y2)-1.2	11/2004	→	04/2007
FABIA (6Y2)-1.4 16V	11/2004	→	04/2007
FABIA Combi-1.2	10/2007	→	
FABIA Combi-1.2 TSI	03/2010	→	
FABIA Combi-1.4	10/2007	→	
FABIA Combi-1.6	10/2007	→	
FABIA Combi (6Y5)-1.2	11/2004	→	12/2007
FABIA Combi (6Y5)-1.4 16V	11/2004	→	12/2007
FABIA Praktik-1.2	11/2004	→	12/2007
FABIA Tre volumi (6Y3)-1.4 16V	11/2004	→	12/2007
OCTAVIA (1Z3)-1.4	05/2004	→	
OCTAVIA (1Z3)-1.6 FSI	05/2004	→	10/2008
OCTAVIA Combi (1Z5)-1.4	05/2006	→	
OCTAVIA Combi (1Z5)-1.6 FSI	05/2004	→	10/2008
ROOMSTER (5J)-1.2	05/2006	→	01/2007
ROOMSTER (5J)-1.2 TSI	03/2010	→	
ROOMSTER (5J)-1.4	09/2006	→	
ROOMSTER (5J)-1.6	09/2006	→	
ROOMSTER Praktik (5J)-1.2 TSI	03/2010	→	
ROOMSTER Praktik (5J)-1.4	03/2007	→	
VW			
GOLF PLUS (5M1, 521)-1.4 16V	01/2005	→	
GOLF PLUS (5M1, 521)-1.4 FSI	07/2005	→	05/2006
GOLF PLUS (5M1, 521)-1.6 FSI	01/2005	→	01/2009




063521204060 MSN2094 1,0kW 12V

VW			
GOLF V (1K1)-1.4 16V	10/2003	→	11/2008
GOLF V (1K1)-1.4 FSI	10/2003	→	05/2006
GOLF V (1K1)-1.6 FSI	10/2003	→	07/2008
GOLF V Variant (1K5)-1.4	08/2007	→	11/2008
GOLF VI (5K1)-1.4	10/2008	→	
GOLF VI Variant (AJ5)-1.4	07/2009	→	
JETTA III (1K2)-1.6 FSI	09/2005	→	06/2008
POLO (6R_)-1.2	06/2009	→	
POLO (6R_)-1.2 TSI	11/2009	→	
POLO (6R_)-1.4	06/2009	→	
POLO (6R_)-1.6 BiFuel	01/2011	→	
POLO (9N_)-1.2	04/2005	→	12/2009
POLO (9N_)-1.2 12V	04/2005	→	12/2009
POLO (9N_)-1.4 16V	04/2005	→	12/2009
POLO (9N_)-1.4 FSI	04/2005	→	07/2006
POLO (9N_)-1.6 16V	05/2006	→	12/2009

063521204080 MSN2095 1,0kW 12V

AUDI			
A3 (8P1)-1.6	05/2003	→	
A3 (8P1)-1.6 E-Power	01/2011	→	
A3 Cabriolet-1.6	09/2008	→	05/2010
A3 Sportback (8PA)-1.6	09/2004	→	
A3 Sportback (8PA)-1.6 E-Power	01/2011	→	
SEAT			
ALTEA (5P1)-1.6	03/2004	→	05/2005
ALTEA (5P1)-1.6 LPG	09/2009	→	
ALTEA XL (5P5, 5P8)-1.6	10/2006	→	
ALTEA XL (5P5, 5P8)-1.6 LPG	09/2009	→	
ALTEA XL (5P5, 5P8)-1.6 Multifuel	12/2007	→	11/2010
CORDOBA (6L2)-2.0	11/2004	→	11/2009
IBIZA IV (6L1)-2.0	04/2002	→	
IBIZA V (6J5)-2.0	10/2008	→	
IBIZA V SPORTCOUPE (6J1)-2.0	10/2008	→	
LEON (1P1)-1.6	07/2005	→	06/2011
LEON (1P1)-1.6 LPG	12/2009	→	06/2011
TOLEDO III (5P2)-1.6	10/2004	→	05/2005
SKODA			
FABIA (6Y2)-2.0	11/2004	→	04/2007
FABIA Combi (6Y5)-2.0	11/2004	→	12/2007
FABIA Tre volumi (6Y3)-2.0	11/2004	→	12/2007
OCTAVIA (1Z3)-1.6	06/2004	→	
OCTAVIA Combi (1Z5)-1.6	09/2004	→	
VW			
GOLF PLUS (5M1, 521)-1.6	11/2007	→	

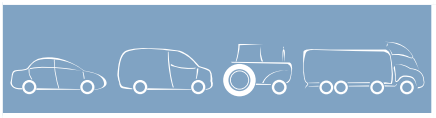


063521204080 MSN2095 1,0kW 12V

VW	
GOLF PLUS (5M1, 521)-1.6 BiFuel	05/2009 →
GOLF PLUS (5M1, 521)-1.6 MultiFuel	11/2007 →
GOLF V (1K1)-1.6	01/2004 → 11/2008
GOLF V (1K1)-1.6 MultiFuel	11/2007 → 11/2008
GOLF V Variant (1K5)-1.6	06/2007 →
GOLF V Variant (1K5)-1.6 MultiFuel	01/2008 → 11/2008
GOLF VI (5K1)-1.6	10/2008 →
GOLF VI (5K1)-1.6 BiFuel	03/2009 →
GOLF VI (5K1)-1.6 MultiFuel	10/2008 →
GOLF VI Variant (AJ5)-1.6	07/2009 →
GOLF VI Variant (AJ5)-1.6 MultiFuel	07/2010 →
JETTA III (1K2)-1.6	01/2008 → 06/2008
JETTA III (1K2)-1.6 MultiFuel	01/2008 → 10/2010

063521204100 MSN2096 1,0kW 12V

AUDI	
A3 (8P1)-1.2 TSI	04/2010 →
A3 Cabriolet-1.2 TFSI	03/2010 →
A3 Sportback (8PA)-1.2 TSI	04/2010 →
SEAT	
ALTEA (5P1)-1.2 TSI	05/2010 →
ALTEA XL (5P5, 5P8)-1.2 TSI	04/2010 →
LEON (1P1)-1.2 TSI	05/2010 →
SKODA	
OCTAVIA (1Z3)-1.2 TSI	02/2010 →
OCTAVIA Combi (1Z5)-1.2 TSI	02/2010 →
YETI (5L)-1.2 TSI	09/2009 →
VW	
CADDY III Furgonato (2KA, 2KH, 2CA, 2CH)-1.2 TSI	09/2010 →
CADDY III Furgonato (2KA, 2KH, 2CA, 2CH)-1.4	03/2004 → 05/2006
CADDY III Furgonato (2KA, 2KH, 2CA, 2CH)-1.4 16V	05/2006 → 05/2008
CADDY III Furgonato (2KA, 2KH, 2CA, 2CH)-1.6	04/2004 → 05/2008
CADDY III Furgonato (2KA, 2KH, 2CA, 2CH)-2.0 EcoFuel	04/2006 → 05/2008
CADDY III Station wagon (2KB, 2KJ)-1.2 TSI	09/2010 →
CADDY III Station wagon (2KB, 2KJ)-1.4	03/2004 → 05/2006
CADDY III Station wagon (2KB, 2KJ)-1.4 16V	05/2006 → 05/2008
CADDY III Station wagon (2KB, 2KJ)-1.6	04/2004 → 05/2008
CADDY III Station wagon (2KB, 2KJ)-2.0 EcoFuel	04/2006 → 05/2008

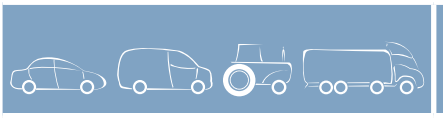


063521204100 MSN2096 1,0kW 12V

VW	
EOS (1F7, 1F8)-1.6 FSI	06/2006 → 05/2008
GOLF PLUS (5M1, 521)-1.2 TSI	11/2009 →
GOLF VI (5K1)-1.2 TSI	05/2009 →
GOLF VI Cabriolet-1.2 TSI	03/2011 →
GOLF VI Variant (AJ5)-1.2 TSI	08/2009 →
JETTA IV (162)-1.2 TSI	02/2011 →
PASSAT (3C2)-1.6	05/2005 → 07/2010
PASSAT (3C2)-1.6 FSI	03/2005 → 06/2008
PASSAT Variant (3C5)-1.6	08/2005 → 11/2010
PASSAT Variant (3C5)-1.6 FSI	08/2005 → 06/2008
TOURAN (1T1, 1T2, 1T3)-1.2 TSI	05/2010 →
TOURAN (1T1, 1T2, 1T3)-1.6	06/2005 → 05/2010
TOURAN (1T1, 1T2, 1T3)-1.6 FSI	02/2003 → 01/2007
TOURAN (1T1, 1T2, 1T3)-2.0 EcoFuel	02/2006 → 05/2009

063521210160 MSN2097 1,1kW 12V

AUDI	
A2 (8Z0)-1.4	11/2001 → 05/2002
A2 (8Z0)-1.6 FSI	05/2002 → 05/2002
SEAT	
CORDOBA (6L2)-1.2	04/2004 → 11/2004
IBIZA IV (6L1)-1.2	02/2002 → 07/2002
IBIZA IV (6L1)-1.4 16V	02/2002 → 07/2002
SKODA	
FABIA (6Y2)-1.4 16V	12/1999 → 05/2002
FABIA Combi (6Y5)-1.4 16V	05/2000 → 05/2002
FABIA Tre volumi (6Y3)-1.4 16V	10/1999 → 05/2002
VW	
BORA (1J2)-1.6 FSI	01/2002 → 06/2002
BORA Station wagon (1J6)-1.6 FSI	01/2002 → 06/2002
GOLF IV (1J1)-1.6	02/2001 → 06/2001
GOLF IV (1J1)-1.6 FSI	01/2002 → 06/2002
GOLF IV Variant (1J5)-1.6 FSI	01/2002 → 06/2002
LUPO (6X1, 6E1)-1.6 GTI	09/2000 → 09/2002
NEW BEETLE (9C1, 1C1)-1.4	11/2001 → 06/2002
POLO (9N_)-1.2	01/2002 → 05/2004
POLO (9N_)-1.2 12V	11/2001 → 05/2004
POLO (9N_)-1.4 16V	10/2001 → 05/2005
POLO Tre volumi-1.4	10/2003 → 05/2005
POLO Tre volumi-1.6	07/2003 → 05/2007

063521210260 MSN2098 1,1kW 12V

AUDI	
A3 (8L1)-1.6	04/1999 → 08/2000
A3 (8L1)-1.8	07/1998 → 04/2003
A3 (8L1)-1.8 T	07/1998 → 06/2003




063521210260 MSN2098 1,1kW 12V

AUDI			
TT (8N3)-1.8 T	09/2000	→	06/2006
TT Roadster (8N9)-1.8 T	08/2000	→	06/2006
SEAT			
ALHAMBRA (7V8, 7V9)-1.8 T 20V	04/1999	→	02/2000
ALHAMBRA (7V8, 7V9)-2.0 i	04/1999	→	02/2000
CORDOBA-1.6	10/1999	→	09/2002
CORDOBA-1.8	12/1999	→	09/2002
CORDOBA (6K2/C2)-2.0 i 16V	04/1999	→	06/1999
CORDOBA 2 volumi /Coda spiovente-2.0	04/1999	→	04/1999
CORDOBA 2 volumi /Coda spiovente (6K2)-1.8 T 20V Cupra	07/2000	→	10/2000
IBIZA II (6K1)-2.0 i 16V	04/1999	→	08/1999
IBIZA III (6K1)-1.8 T 20V Cupra	07/2000	→	02/2002
IBIZA IV (6L1)-1.8	05/2004	→	10/2004
IBIZA IV (6L1)-1.8 T Cupra R	01/2004	→	02/2008
IBIZA IV (6L1)-1.8 T FR	12/2003	→	10/2004
LEON (1M1)-1.8 20V	11/1999	→	07/2004
LEON (1M1)-1.8 20V T	12/1999	→	04/2004
TOLEDO II (1M2)-1.8 20V	04/1999	→	12/2003
SKODA			
OCTAVIA (1U2)-1.8	05/1998	→	04/1999
OCTAVIA (1U2)-1.8 T	01/2000	→	01/2006
OCTAVIA (1U2)-2.0	06/1999	→	05/2007
OCTAVIA (1U2)-RS 1.8 T	05/2001	→	09/2004
OCTAVIA Combi (1U5)-1.8 20V	07/1998	→	04/1999
OCTAVIA Combi (1U5)-1.8 T	01/2000	→	01/2006
OCTAVIA Combi (1U5)-2.0	08/2000	→	01/2006
OCTAVIA Combi (1U5)-RS 1.8 T	01/2003	→	01/2006
VW			
BORA (1J2)-1.8	10/1998	→	10/2000
BORA (1J2)-1.8 T	05/2000	→	05/2005
BORA (1J2)-2.0	10/1998	→	05/2005
BORA Station wagon (1J6)-1.8 4motion	05/1999	→	10/2000
BORA Station wagon (1J6)-1.8 T	05/2000	→	05/2005
BORA Station wagon (1J6)-2.0	05/1999	→	05/2005
GOLF IV (1J1)-1.8	04/1999	→	10/2000
GOLF IV (1J1)-2.0	08/1998	→	05/2004
GOLF IV Variant (1J5)-1.8 4motion	05/1999	→	10/2000
GOLF IV Variant (1J5)-1.8 T	05/2000	→	05/2003
GOLF IV Variant (1J5)-2.0	05/1999	→	06/2006
GOLF IV Variant (1J5)-2.0 Bi-Fuel	05/2002	→	06/2006
NEW BEETLE (9C1, 1C1)-1.6	06/2000	→	
NEW BEETLE (9C1, 1C1)-1.8 T	06/2000	→	06/2005
NEW BEETLE (9C1, 1C1)-2.0	07/2004	→	




063521210260 MSN2098 1,1kW 12V

VW			
NEW BEETLE Cabriolet (1Y7)-1.6	01/2003	→	09/2010
NEW BEETLE Cabriolet (1Y7)-1.8 T	12/2003	→	06/2005
NEW BEETLE Cabriolet (1Y7)-2.0	01/2003	→	10/2010
SHARAN (7M8, 7M9, 7M6)-1.8 T 20V	11/1997	→	02/2000
SHARAN (7M8, 7M9, 7M6)-2.0	04/1999	→	02/2000

063521210280 MSN2099 1,1kW 12V

AUDI			
A3 (8L1)-1.6	06/1998		06/2003
A3 (8L1)-1.8	06/1998		04/2003
A3 (8L1)-1.8 T	06/1998		06/2003
A3 (8L1)-1.9 TDI	08/2000		06/2003
SEAT			
ALHAMBRA (7V8, 7V9)-1.8 T 20V	05/1998	→	02/2000
ALHAMBRA (7V8, 7V9)-2.0 i	06/2000	→	03/2010
CORDOBA-1.8 i	05/1999	→	09/2002
CORDOBA (6K2/C2)-1.6 i	08/1995	→	10/1999
CORDOBA (6K2/C2)-1.8 i	08/1995	→	06/1999
CORDOBA (6K2/C2)-1.8 i 16V	08/1995	→	06/1996
CORDOBA (6K2/C2)-2.0 i	08/1995	→	06/1999
CORDOBA 2 volumi /Coda spiovente-1.6 i	07/1996	→	06/1999
CORDOBA 2 volumi /Coda spiovente-1.6 SXE	07/1996	→	04/1999
CORDOBA 2 volumi /Coda spiovente (6K2)-1.6	09/1999	→	10/2000
CORDOBA Vario (6K5)-1.6	06/1999	→	12/2002
CORDOBA Vario (6K5)-1.6 i	04/1997	→	06/1999
IBIZA II (6K1)-1.6 i	08/1995	→	08/1999
IBIZA II (6K1)-1.8 i	08/1995	→	08/1999
IBIZA II (6K1)-1.8 i 16V	08/1995	→	06/1996
IBIZA II (6K1)-2.0 i	08/1995	→	08/1999
IBIZA III (6K1)-1.6	08/1999	→	02/2002
INCA (6K9)-1.6 i	11/1995	→	05/1997
LEON (1M1)-1.4 16V	12/1999	→	04/2004
LEON (1M1)-1.6	11/1999	→	06/2006
LEON (1M1)-1.6 16 V	09/2000	→	06/2006
LEON (1M1)-1.8 20V	11/1999	→	07/2004
LEON (1M1)-1.8 20V T	12/1999	→	04/2004
LEON (1M1)-1.8 T Cupra R	05/2002	→	05/2003
TOLEDO I (1L)-1.6 i	08/1995	→	03/1999
TOLEDO I (1L)-1.8 i	08/1995	→	12/1996
TOLEDO I (1L)-2.0 i	08/1995	→	03/1999
TOLEDO II (1M2)-1.4 16V	07/1999	→	05/2002
TOLEDO II (1M2)-1.6	04/1999	→	09/2000
TOLEDO II (1M2)-1.6 16V	09/2000	→	07/2004




063521210280 MSN2099 1,1kW 12V	
SEAT	
TOLEDO II (1M2)-1.8 20V	04/1999 → 12/2003
TOLEDO II (1M2)-1.8 20VT	05/2001 → 10/2002
SKODA	
OCTAVIA (1U2)-1.4 16V	09/2000 → 05/2001
OCTAVIA (1U2)-1.6	09/1996 → 08/2002
OCTAVIA (1U2)-1.8	09/1996 → 04/1999
OCTAVIA (1U2)-2.0	06/1999 → 05/2007
OCTAVIA Combi (1U5)-1.4 16V	08/2000 → 05/2001
OCTAVIA Combi (1U5)-1.6	07/1998 → 08/2002
OCTAVIA Combi (1U5)-1.8 20V	07/1998 → 04/1999
OCTAVIA Combi (1U5)-2.0	08/2000 → 01/2006
VW	
BORA (1J2)-1.4 16V	03/2000 → 05/2005
BORA (1J2)-1.6	10/1998 → 05/2005
BORA (1J2)-1.6 16V	05/2000 → 05/2005
BORA (1J2)-1.8 T	05/2000 → 05/2005
BORA (1J2)-2.0	10/1998 → 05/2005
BORA Station wagon (1J6)-1.4 16V	09/2001 → 05/2005
BORA Station wagon (1J6)-1.6	05/1999 → 05/2005
BORA Station wagon (1J6)-1.6 16V	02/2000 → 05/2005
BORA Station wagon (1J6)-1.8 T	09/2000 → 04/2001
BORA Station wagon (1J6)-2.0	05/1999 → 05/2005
CADDY II Furgonato (9K9A)-75 1.6	11/1995 → 05/1997
CADDY II Station wagon (9K9B)-1.6	11/1995 → 05/1997
GOLF III (1H1)-1.6	12/1995 → 08/1997
GOLF III (1H1)-1.8	08/1995 → 08/1997
GOLF III (1H1)-2.0	07/1995 → 08/1997
GOLF III (1H1)-2.0 GL	08/1995 → 09/1997
GOLF III (1H1)-2.0 GTI 16V	08/1992 → 08/1997
GOLF III Cabriolet (1E7)-1.6	10/1994 → 04/1998
GOLF III Cabriolet (1E7)-1.8	08/1995 → 04/1998
GOLF III Cabriolet (1E7)-2.0	07/1995 → 04/1998
GOLF III Variant (1H5)-1.4	07/1993 → 02/1999
GOLF III Variant (1H5)-1.6	08/1995 → 02/1999
GOLF III Variant (1H5)-1.8	08/1995 → 02/1999
GOLF III Variant (1H5)-2.0	07/1995 → 02/1999
GOLF IV (1J1)-1.4 16V	01/1998 → 05/2001
GOLF IV (1J1)-1.6	01/1998 → 05/2004
GOLF IV (1J1)-1.6 16V	02/2000 → 05/2004
GOLF IV (1J1)-1.8	01/1998 → 10/2000
GOLF IV (1J1)-1.8 T	01/1998 → 05/2003
GOLF IV (1J1)-2.0	08/1998 → 05/2004
GOLF IV Cabriolet (1E7)-1.6	06/1998 → 10/2000
GOLF IV Cabriolet (1E7)-1.8	06/1998 → 10/2000

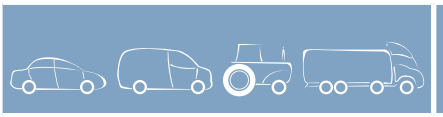


063521210280 MSN2099 1,1kW 12V	
VW	
GOLF IV Cabriolet (1E7)-2.0	06/1998 → 06/2002
GOLF IV Variant (1J5)-1.4 16V	05/1999 → 10/2001
GOLF IV Variant (1J5)-1.6	05/1999 → 06/2006
GOLF IV Variant (1J5)-1.6 16V	02/2000 → 06/2006
GOLF IV Variant (1J5)-1.8 4motion	05/1999 → 10/2000
GOLF IV Variant (1J5)-1.8 T	05/2000 → 05/2003
GOLF IV Variant (1J5)-2.0	05/1999 → 06/2006
NEW BEETLE (9C1, 1C1)-1.6	10/1999 →
NEW BEETLE Cabriolet (1Y7)-1.8 T	01/2003 → 06/2004
NEW BEETLE Cabriolet (1Y7)-2.0	01/2003 → 10/2010
PASSAT (3A2, 35I)-1.6	10/1994 → 08/1996
PASSAT (3A2, 35I)-1.8	08/1990 → 08/1996
PASSAT (3A2, 35I)-2.0	03/1995 → 08/1996
PASSAT (3A2, 35I)-2.0 16V	01/1994 → 08/1996
PASSAT Variant (3A5, 35I)-1.6	10/1994 → 12/1995
PASSAT Variant (3A5, 35I)-1.8	08/1990 → 03/1997
PASSAT Variant (3A5, 35I)-2.0	03/1995 → 03/1997
PASSAT Variant (3A5, 35I)-2.0 16V	01/1994 → 03/1997
POLO CLASSIC (6KV2)-1.6	05/1996 → 08/1999
POLO CLASSIC (6KV2)-100 1.6	10/1999 → 09/2001
POLO CLASSIC (6KV2)-2.0	08/1999 → 09/2001
POLO CLASSIC (6KV2)-75 1.6	11/1995 → 09/1997
POLO CLASSIC (6KV2)-90 1.8	03/1998 → 09/2001
POLO Variant (6KV5)-1.6	01/1998 → 09/2001
SHARAN (7M8, 7M9, 7M6)-1.8 T 20V	11/1997 → 02/2000
SHARAN (7M8, 7M9, 7M6)-2.0	01/1998 → 11/2008
SHARAN (7M8, 7M9, 7M6)-2.0 LPG	04/2006 → 03/2010
VENTO (1H2)-1.6	08/1995 → 12/1997
VENTO (1H2)-1.8	08/1995 → 12/1997
VENTO (1H2)-2.0	07/1995 → 12/1997
063521214020 MSN2101 1,1kW 12V	
AUDI	
A3 (8P1)-1.6	05/2003 → 05/2005
A3 (8P1)-1.6 FSI	08/2003 → 12/2004
A3 (8P1)-1.8 TFSI quattro	07/2008 →
A3 (8P1)-2.0 FSI	05/2003 → 06/2008
A3 (8P1)-2.0 TFSI	10/2007 → 06/2008
A3 (8P1)-S3 quattro	11/2006 →
A3 Cabriolet-2.0 TFSI	04/2008 → 01/2009
A3 Sportback (8PA)-1.6	09/2004 → 05/2005
A3 Sportback (8PA)-1.6 FSI	09/2004 → 12/2004
A3 Sportback (8PA)-1.8 TFSI quattro	07/2008 →
A3 Sportback (8PA)-2.0 FSI	09/2004 → 06/2008
A3 Sportback (8PA)-2.0 TFSI	09/2004 → 10/2005




063521214020 MSN2101 1,1kW 12V

AUDI		
A3 Sportback (8PA)-S3 quattro	07/2008 →	
TT (8J3)-2.0 quattro	05/2008 →	
TT (8J3)-2.0 TDI quattro	05/2010 →	
TT (8J3)-2.0 TFSI	10/2006 →	
TT (8J3)-2.0 TFSI quattro	06/2008 →	
TT Roadster (8J9)-2.0 quattro	05/2008 →	
TT Roadster (8J9)-2.0 TDI quattro	05/2010 →	
TT Roadster (8J9)-2.0 TFSI	02/2007 →	
TT Roadster (8J9)-2.0 TFSI quattro	06/2008 →	
SEAT		
ALTEA (5P1)-1.2 TSI	05/2010 →	
ALTEA (5P1)-1.6	03/2004 →	
ALTEA (5P1)-2.0 FSI	05/2004 →	03/2009
ALTEA (5P1)-2.0 TFSI	05/2006 →	03/2009
ALTEA XL (5P5, 5P8)-1.2 TSI	04/2010 →	
ALTEA XL (5P5, 5P8)-1.6	10/2006 →	
ALTEA XL (5P5, 5P8)-2.0 FSI	10/2006 →	03/2009
ALTEA XL (5P5, 5P8)-2.0 TFSI 4x4	06/2007 →	05/2009
IBIZA IV (6L1)-1.6 16V	11/2006 →	11/2009
LEON (1P1)-1.6	07/2005 →	
LEON (1P1)-1.6 LPG	12/2009 →	
LEON (1P1)-2.0 FSI	07/2005 →	03/2009
LEON (1P1)-2.0 TFSI	11/2005 →	
TOLEDO III (5P2)-1.6	12/2007 →	05/2009
TOLEDO III (5P2)-2.0	02/2006 →	
TOLEDO III (5P2)-2.0 FSI	10/2004 →	03/2009
TOLEDO III (5P2)-2.0 TFSI	11/2005 →	05/2009
SKODA		
FABIA-1.6	06/2010 →	
FABIA Combi-1.6	06/2010 →	
OCTAVIA (1Z3)-1.6	06/2004 →	
OCTAVIA (1Z3)-1.6 FSI	05/2004 →	10/2008
OCTAVIA (1Z3)-1.8 TSI	11/2008 →	
OCTAVIA (1Z3)-2.0 FSi	11/2004 →	11/2005
OCTAVIA (1Z3)-2.0 RS	10/2005 →	
OCTAVIA Combi (1Z5)-1.6	09/2004 →	
OCTAVIA Combi (1Z5)-1.6 FSI	05/2004 →	10/2008
OCTAVIA Combi (1Z5)-1.8 TSI	11/2008 →	
OCTAVIA Combi (1Z5)-2.0 FSI	11/2004 →	
OCTAVIA Combi (1Z5)-2.0 RS	10/2005 →	
ROOMSTER (5J)-1.6	09/2006 →	
SUPERB (3T4)-1.8 TSI 4x4	03/2009 →	
SUPERB Station wagon (3T5)-1.8 TSI 4x4	10/2009 →	
YETI (5L)-1.8 TSI 4x4	05/2009 →	




063521214020 MSN2101 1,1kW 12V

SKODA		
YETI (5L)-1.8 TSI 4x4	11/2009 →	
VW		
EOS (1F7, 1F8)-2.0 TFSI	05/2006 →	11/2010
EOS (1F7, 1F8)-2.0 TSI	11/2009 →	11/2010
GOLF PLUS (5M1, 521)-1.6	05/2005 →	12/2008
GOLF PLUS (5M1, 521)-1.6 FSI	01/2005 →	01/2009
GOLF PLUS (5M1, 521)-2.0 FSI	05/2005 →	06/2008
GOLF V (1K1)-1.6	01/2004 →	11/2008
GOLF V (1K1)-1.6 FSI	10/2003 →	07/2008
GOLF V (1K1)-2.0	08/2006 →	11/2008
GOLF V (1K1)-2.0 FSI	01/2005 →	11/2005
GOLF V (1K1)-2.0 GTI	10/2004 →	11/2008
GOLF V Variant (1K5)-1.6	06/2007 →	11/2008
GOLF V Variant (1K5)-2.0	06/2007 →	03/2009
GOLF VI (5K1)-2.0 TSI	04/2009 →	
GOLF VI Variant (AJ5)-1.6	07/2009 →	
JETTA III (1K2)-1.4 TSI	07/2007 →	10/2010
JETTA III (1K2)-1.6	10/2005 →	06/2008
JETTA III (1K2)-1.6 FSI	09/2005 →	06/2008
JETTA III (1K2)-2.0	08/2005 →	03/2008
JETTA III (1K2)-2.0 TFSI	10/2005 →	06/2008
JETTA III (1K2)-2.5 FSI	07/2008 →	10/2010
JETTA IV (162)-2.0 TSI	02/2011 →	
PASSAT (362)-2.0 TSI	11/2010 →	
PASSAT (3C2)-1.6 FSI	03/2005 →	06/2008
PASSAT (3C2)-2.0 FSI	07/2005 →	07/2010
PASSAT CC-2.0 TSI	06/2008 →	
PASSAT Variant (365)-2.0 TSI	11/2010 →	
PASSAT Variant (3C5)-1.6 FSI	08/2005 →	06/2008
PASSAT Variant (3C5)-2.0 FSI	08/2005 →	11/2010
POLO (9N_)-1.4 16V	05/2006 →	12/2009
POLO (9N_)-1.6 16V	05/2006 →	12/2009
SCIROCCO (137)-2.0 R	11/2009 →	
SCIROCCO (137)-2.0 TSI	09/2008 →	
TIGUAN (5N_)-1.4 TSI	05/2008 →	
TIGUAN (5N_)-2.0 TFSI 4motion	11/2007 →	
TOURAN (1T1, 1T2, 1T3)-1.6	07/2003 →	05/2005
TOURAN (1T1, 1T2, 1T3)-1.6 FSI	02/2003 →	01/2007
TOURAN (1T1, 1T2, 1T3)-2.0 FSI	02/2005 →	11/2005

063521214080 MSN2102 1,1kW 12V

AUDI		
A3 (8P1)-1.4 TFSI	09/2007 →	
A3 (8P1)-1.8 TFSI	11/2006 →	06/2007
A3 (8P1)-2.0 FSI	05/2003 →	06/2008

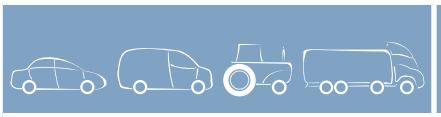


063521214080 MSN2102 1,1kW 12V

AUDI			
A3 Cabriolet-1.8 TFSI	04/2008	→	01/2009
A3 Sportback (8PA)-1.4 TFSI	09/2007	→	
A3 Sportback (8PA)-1.8 TFSI	11/2006	→	06/2007
TT (8J3)-1.8 TFSI	06/2008	→	
TT Roadster (8J9)-1.8 TFSI	06/2008	→	
SEAT			
ALTEA (5P1)-1.4 TSI	11/2007	→	
ALTEA (5P1)-1.8 TFSI	06/2007	→	
ALTEA (5P1)-2.0 FSI	05/2004	→	03/2009
ALTEA XL (5P5, 5P8)-1.4 TSI	11/2007	→	
ALTEA XL (5P5, 5P8)-1.8 TFSI	01/2007	→	06/2007
ALTEA XL (5P5, 5P8)-2.0 FSI	10/2006	→	03/2009
IBIZA IV (6L1)-1.8	11/2004	→	02/2008
IBIZA IV (6L1)-1.8 T Cupra R	04/2005	→	02/2008
IBIZA IV (6L1)-1.8 T FR	11/2004	→	05/2008
LEON (1P1)-1.4 TSI	11/2007	→	06/2011
LEON (1P1)-1.8 TSI	06/2007	→	03/2009
LEON (1P1)-2.0 FSI	07/2005	→	03/2009
TOLEDO III (5P2)-1.8 TFSI	06/2007	→	03/2009
TOLEDO III (5P2)-2.0 FSI	10/2004	→	03/2009
SKODA			
OCTAVIA (1Z3)-1.4 TSI	11/2008	→	
OCTAVIA (1Z3)-1.8	06/2007	→	
OCTAVIA (1Z3)-1.8 TSI	06/2007	→	
OCTAVIA (1Z3)-2.0 FSI	11/2004	→	
OCTAVIA Combi (1Z5)-1.4 TSI	11/2008	→	
OCTAVIA Combi (1Z5)-1.8 TSI	06/2007	→	
OCTAVIA Combi (1Z5)-2.0 FSI	11/2004	→	
SUPERB (3T4)-1.4 TSI	07/2008	→	
SUPERB (3T4)-1.8 TSI	03/2008	→	
SUPERB Station wagon (3T5)-1.4 TSI	10/2009	→	
SUPERB Station wagon (3T5)-1.8 TSI	10/2009	→	
YETI (5L)-1.4 TSI	06/2010	→	
VW			
EOS (1F7, 1F8)-2.0 FSI	05/2006	→	05/2008
GOLF PLUS (5M1, 521)-1.4 TSI	05/2006	→	
GOLF PLUS (5M1, 521)-2.0 FSI	05/2005	→	06/2008
GOLF V (1K1)-1.4 TSI	11/2005	→	
GOLF V (1K1)-2.0 FSI	11/2005	→	
GOLF V (1K1)-2.0 FSI 4motion	11/2005	→	11/2005
GOLF V Variant (1K5)-1.4 TSI	06/2007	→	06/2008
GOLF VI (5K1)-1.4 TSI	10/2008	→	
JETTA III (1K2)-1.4 TSI	07/2007	→	10/2010
JETTA III (1K2)-2.5 FSI	09/2006	→	06/2007

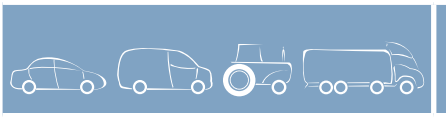


063521214080 MSN2102 1,1kW 12V

VW			
MULTIVAN V (7HM, 7HN, 7HF, 7EF, 7EM, 7EN)-2.0	09/2009	→	
PASSAT (3C2)-1.4 TSI	05/2007	→	
PASSAT (3C2)-1.8 TSI	05/2008	→	
PASSAT (3C2)-2.0 FSI	03/2005	→	
PASSAT CC-1.8 TSI	06/2008	→	
PASSAT Variant (3C5)-1.4 TSI	05/2007	→	
PASSAT Variant (3C5)-1.8 TSI	05/2007	→	
PASSAT Variant (3C5)-2.0 FSI	08/2005	→	
POLO (9N_)-1.8 GTI	09/2005	→	
POLO (9N_)-1.8 GTi Cup Edition	05/2006	→	
SCIROCCO (137)-1.4 TSI	09/2008	→	
TOURAN (1T1, 1T2, 1T3)-1.4 TSI	11/2006	→	11/2008
TOURAN (1T1, 1T2, 1T3)-2.0 FSI	10/2003	→	11/2005
TRANSPORTER V Autobus (7HB, 7HJ, 7EB, 7EJ)-2.0	09/2009	→	
TRANSPORTER V Furgonato (7HA, 7HH, 7EA, 7EH)-2.0	09/2009	→	
TRANSPORTER V Pianale piatto/Telaio (7JD, 7JE, 7JL, 7JY, 7JZ-2.0	09/2009	→	

063521214120 MSN2103 1,0kW 12V

AUDI			
A3 (8P1)-2.0 TFSI	10/2007	→	06/2008
A3 (8P1)-S3 quattro	07/2008	→	
A3 Cabriolet-1.8 TFSI	04/2008	→	01/2009
A3 Cabriolet-2.0 TFSI	04/2008	→	01/2009
A3 Sportback (8PA)-1.8 TFSI	06/2007	→	06/2008
A3 Sportback (8PA)-2.0 TFSI	09/2004	→	
A3 Sportback (8PA)-S3 quattro	07/2008	→	
TT (8J3)-2.0 quattro	05/2008	→	
TT (8J3)-2.0 TFSI	10/2006	→	06/2010
TT Roadster (8J9)-2.0 quattro	05/2008	→	
TT Roadster (8J9)-2.0 TFSI	02/2007	→	06/2010
SEAT			
ALTEA (5P1)-2.0 TFSI	05/2006	→	03/2009
ALTEA XL (5P5, 5P8)-2.0 TFSI 4x4	06/2007	→	05/2009
LEON (1P1)-2.0 TFSI	11/2005	→	03/2009
TOLEDO III (5P2)-2.0	02/2006	→	
TOLEDO III (5P2)-2.0 TFSI	11/2005	→	05/2009
SKODA			
OCTAVIA (1Z3)-2.0 RS	11/2008	→	
OCTAVIA Combi (1Z5)-2.0 RS	11/2008	→	
VW			
EOS (1F7, 1F8)-2.0 TFSI	03/2006	→	




063521214120 MSN2103 1,0kW 12V

VW			
EOS (1F7, 1F8)-2.0 TSI	11/2009	→	11/2010
GOLF PLUS (5M1, 521)-1.4 TSI	05/2006	→	06/2008
GOLF V (1K1)-1.4 TSI	11/2005	→	11/2008
GOLF V (1K1)-2.0 GTI	10/2004	→	11/2008
GOLF V Variant (1K5)-1.4 TSI	06/2007	→	06/2008
GOLF V Variant (1K5)-2.0	06/2007	→	03/2009
GOLF VI (5K1)-2.0 R 4motion	11/2009	→	
GOLF VI (5K1)-2.0 TSI	04/2009	→	
JETTA III (1K2)-1.4 TSI	07/2006	→	06/2008
JETTA III (1K2)-2.0	08/2005	→	03/2008
JETTA III (1K2)-2.0 TFSI	10/2005	→	03/2008
SCIROCCO (137)-2.0 R	11/2009	→	05/2010
SCIROCCO (137)-2.0 TSI	09/2008	→	05/2010
TOURAN (1T1, 1T2, 1T3)-1.4 FSI	11/2006	→	11/2008

063521230120 MSN2104 1,7kW 12V

AUDI			
A3 (8P1)-1.9 TDI	06/2003	→	05/2009
A3 Cabriolet-1.9 TDI	04/2008	→	05/2009
A3 Sportback (8PA)-1.9 TDI	09/2004	→	05/2006
SEAT			
ALTEA (5P1)-1.9 TDI	10/2005	→	12/2010
ALTEA XL (5P5, 5P8)-1.9 TDI	10/2006	→	12/2010
CORDOBA (6L2)-1.4 TDI	11/2004	→	11/2009
CORDOBA (6L2)-1.9 TDI	11/2004	→	09/2005
IBIZA IV (6L1)-1.4 TDI	11/2004	→	11/2009
IBIZA IV (6L1)-1.9 TDI	11/2004	→	05/2005
IBIZA V (6J5)-1.4 TDI	08/2008	→	06/2010
IBIZA V (6J5)-1.9 TDI	03/2008	→	06/2010
IBIZA V SPORTCOUPE (6J1)-1.4 TDI	07/2008	→	06/2010
IBIZA V SPORTCOUPE (6J1)-1.9 TDI	07/2008	→	06/2010
LEON (1P1)-1.9 TDI	11/2005	→	12/2010
TOLEDO III (5P2)-1.9 TDI	10/2004	→	
SKODA			
FABIA-1.4 TDI	01/2007	→	03/2010
FABIA-1.9 TDI	04/2007	→	03/2010
FABIA (6Y2)-1.4 TDI	11/2004	→	04/2007
FABIA (6Y2)-1.9 TDI	11/2004	→	04/2007
FABIA Combi-1.4 TDI	10/2007	→	03/2010
FABIA Combi-1.9 TDI	10/2007	→	03/2010
FABIA Combi (6Y5)-1.4 TDI	11/2004	→	12/2007
FABIA Combi (6Y5)-1.9 TDI	11/2004	→	12/2007
FABIA Tre volumi (6Y3)-1.4 TDI	11/2004	→	12/2007
FABIA Tre volumi (6Y3)-1.9 TDI	11/2004	→	12/2007
OCTAVIA (1Z3)-1.9 TDI	06/2004	→	12/2010




063521230120 MSN2104 1,7kW 12V

SKODA			
OCTAVIA Combi (1Z5)-1.9 TDI	09/2004	→	12/2010
ROOMSTER (5J)-1.4 TDI	09/2006	→	03/2010
ROOMSTER (5J)-1.9 TDI	03/2006	→	03/2010
ROOMSTER Praktik (5J)-1.4 TDI	03/2007	→	03/2010
SUPERB (3T4)-1.9 TDI	03/2008	→	
SUPERB Station wagon (3T5)-1.9 TDI	10/2009	→	11/2010
VW			
CADDY III Furgonato (2KA, 2KH, 2CA, 2CH)-1.9 TDI	04/2004	→	05/2008
CADDY III Station wagon (2KB, 2KJ)-1.9 TDI	04/2004	→	05/2008
GOLF PLUS (5M1, 521)-1.9 TDI	01/2005	→	01/2009
GOLF PLUS (5M1, 521)-2.0 TDI	05/2005	→	05/2006
GOLF V (1K1)-1.9 TDI	05/2004	→	11/2008
GOLF V Variant (1K5)-1.9 TDI	06/2007	→	
JETTA III (1K2)-1.9 TDI	09/2005	→	02/2006
MULTIVAN V (7HM, 7HN, 7HF, 7EF, 7EM, 7EN)-1.9 TDI	04/2003	→	11/2009
PASSAT (362)-1.4 TSI	08/2010	→	
PASSAT (362)-1.4 TSI EcoFuel	09/2010	→	
PASSAT (362)-1.4 TSI MultiFuel	11/2010	→	
PASSAT (3C2)-1.9 TDI	03/2005	→	11/2008
PASSAT Variant (365)-1.4 TSI	08/2010	→	
PASSAT Variant (365)-1.4 TSI EcoFuel	09/2010	→	
PASSAT Variant (365)-1.4 TSI MultiFuel	11/2010	→	
PASSAT Variant (3C5)-1.9 TDI	08/2005	→	11/2008
POLO (9N_)-1.4 TDI	04/2005	→	12/2009
POLO (9N_)-1.9 TDI	04/2005	→	12/2009
POLO Tre volumi-1.4 TDI	12/2004	→	05/2007
POLO Tre volumi-1.9 TDi	07/2003	→	05/2007
TOURAN (1T1, 1T2, 1T3)-1.9 TDI	02/2003	→	05/2010
TRANSPORTER V Autobus (7HB, 7HJ, 7EB, 7EJ)-1.9 TDI	04/2003	→	11/2009
TRANSPORTER V Furgonato (7HA, 7HH, 7EA, 7EH)-1.9 TDI	04/2003	→	11/2009
TRANSPORTER V Pianale piatto/Telaio (7JD, 7JE, 7JL, 7JY, 7JZ-1.9 TDI	04/2003	→	11/2009

063521230140 MSN2105 1,7kW 12V

AUDI			
A3 (8P1)-2.0	06/2006	→	06/2008
A3 (8P1)-2.0 TDI	06/2005	→	06/2008
A3 Sportback (8PA)-2.0	06/2006	→	06/2008
A3 Sportback (8PA)-2.0 TDI	06/2005	→	06/2008
TT (8J3)-2.0 TDI quattro	06/2008	→	
TT Roadster (8J9)-2.0 TDI quattro	06/2008	→	




063521230140 MSN2105 1,7kW 12V

SEAT	
ALTEA (5P1)-2.0 TDI	04/2004 → 03/2009
ALTEA XL (5P5, 5P8)-2.0 TDI	11/2006 → 03/2009
CORDOBA (6L2)-1.9 TDI	11/2004 →
IBIZA IV (6L1)-1.9 TDI	11/2004 → 11/2009
IBIZA IV (6L1)-1.9 TDI Cupra R	11/2004 → 02/2008
LEON (1P1)-2.0 D	08/2005 →
TOLEDO III (5P2)-2.0 TDI	09/2004 → 05/2009
SKODA	
FABIA (6Y2)-1.9 TDI RS	11/2004 → 04/2007
OCTAVIA (1Z3)-2.0 TDI	05/2004 → 05/2010
OCTAVIA (1Z3)-2.0 TDI 16V	05/2004 →
OCTAVIA (1Z3)-2.0 TDI RS	04/2006 → 05/2008
OCTAVIA Combi (1Z5)-1.9 TDI 4x4	11/2004 → 12/2010
OCTAVIA Combi (1Z5)-2.0 TDI	11/2005 →
OCTAVIA Combi (1Z5)-2.0 TDI 16V	05/2004 → 05/2010
OCTAVIA Combi (1Z5)-2.0 TDI 4x4	07/2006 →
OCTAVIA Combi (1Z5)-2.0 TDI RS	04/2006 → 05/2008
SUPERB (3T4)-2.0 TDI	03/2008 → 03/2010
SUPERB Station wagon (3T5)-2.0 TDI	10/2009 →
VW	
CADDY III Furgonato (2KA, 2KH, 2CA, 2CH)-1.9 TDI 4motion	11/2008 → 08/2010
CADDY III Furgonato (2KA, 2KH, 2CA, 2CH)-2.0 TDI	09/2007 → 05/2008
CADDY III Station wagon (2KB, 2KJ)-1.9 TDI 4motion	05/2008 →
CADDY III Station wagon (2KB, 2KJ)-2.0 TDI	09/2007 → 05/2008
EOS (1F7, 1F8)-2.0 TDI	06/2006 → 05/2008
GOLF PLUS (5M1, 521)-2.0 TDI	05/2005 → 01/2009
GOLF V (1K1)-1.9 TDI	10/2003 →
GOLF V (1K1)-2.0 TDI	11/2005 → 11/2008
GOLF V (1K1)-3.2	09/2005 → 07/2007
GOLF V (1K1)-3.2 R32 4motion	11/2005 → 05/2007
GOLF V Variant (1K5)-2.0 TDI	06/2007 → 05/2008
GOLF V Variant (1K5)-2.0 TDI 16V	06/2007 → 05/2008
JETTA III (1K2)-2.0 TDI	09/2005 → 06/2008
MULTIVAN V (7HM, 7HN, 7HF, 7EF, 7EM, 7EN)-3.2 V6	02/2004 → 11/2009
PASSAT (3C2)-2.0 TDI	08/2005 → 05/2006
PASSAT (3C2)-2.0 TDI 16V	03/2005 → 06/2008
PASSAT (3C2)-3.6 FSI	09/2005 → 07/2007
PASSAT Variant (3C5)-2.0 TDI	03/2006 → 05/2006
PASSAT Variant (3C5)-2.0 TDI 16V	08/2005 → 06/2008
PASSAT Variant (3C5)-3.6 FSI	09/2005 → 11/2010

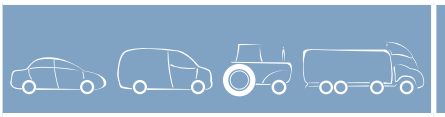


063521230140 MSN2105 1,7kW 12V

VW	
POLO (9N_)-1.9 TDI	04/2005 → 12/2009
TOURAN (1T1, 1T2, 1T3)-2.0 TDI	02/2003 → 05/2010
TRANSPORTER V Autobus (7HB, 7HJ, 7EB, 7EJ)-3.2 V6	02/2004 → 11/2009
TRANSPORTER V Furgonato (7HA, 7HH, 7EA, 7EH)-3.2 V6	04/2003 → 11/2009
TRANSPORTER V Pianale piatto/Telaio (7JD, 7JE, 7JL, 7JY, 7JZ-3.2 V6	08/2003 → 11/2009

063521230160 MSN2106 1,7kW 12V

AUDI	
A3 (8P1)-2.0	06/2006 → 06/2008
A3 (8P1)-2.0 TDI	05/2003 → 06/2008
A3 (8P1)-2.0 TDI 16V	05/2003 → 06/2008
A3 (8P1)-2.0 TDI quattro	05/2003 → 06/2008
A3 (8P1)-3.2 V6 quattro	07/2003 →
A3 Sportback (8PA)-2.0	06/2006 → 06/2008
A3 Sportback (8PA)-2.0 TDI	09/2004 → 06/2008
A3 Sportback (8PA)-2.0 TDI 16V	09/2004 → 06/2008
A3 Sportback (8PA)-3.2 V6 quattro	09/2004 →
TT (8J3)-3.2 V6 quattro	10/2006 →
TT (8N3)-1.8 T	09/2000 → 06/2006
TT Roadster (8J9)-3.2 V6 quattro	02/2007 →
TT Roadster (8N9)-1.8 T	08/2000 → 06/2006
SEAT	
ALTEA (5P1)-1.9 TDI	10/2005 →
ALTEA (5P1)-2.0 TDI	04/2004 → 03/2009
ALTEA (5P1)-2.0 TDI 16V	03/2004 →
ALTEA XL (5P5, 5P8)-1.9 TDI	10/2006 →
ALTEA XL (5P5, 5P8)-2.0 TDI	11/2006 → 03/2009
ALTEA XL (5P5, 5P8)-2.0 TDI 16V	10/2006 →
LEON (1P1)-1.9 TDI	07/2005 → 02/2006
LEON (1P1)-2.0 D	08/2005 →
LEON (1P1)-2.0 TDI	07/2005 → 05/2010
LEON (1P1)-2.0 TDI 16V	07/2005 →
TOLEDO III (5P2)-1.9 TDI	10/2004 →
TOLEDO III (5P2)-2.0 TDI	09/2004 → 05/2009
TOLEDO III (5P2)-2.0 TDI 16V	04/2004 → 05/2009
SKODA	
OCTAVIA (1Z3)-1.9 TDI	06/2004 → 12/2010
OCTAVIA (1Z3)-2.0 TDI	05/2004 → 05/2010
OCTAVIA (1Z3)-2.0 TDI 16V	05/2004 →
OCTAVIA (1Z3)-2.0 TDI RS	04/2006 → 05/2008
OCTAVIA Combi (1Z5)-1.9 TDI	09/2004 → 12/2010
OCTAVIA Combi (1Z5)-2.0 TDI	11/2005 →




063521230160 MSN2106 1,7kW 12V	
SKODA	
OCTAVIA Combi (1Z5)-2.0 TDI 16V	05/2004 → 05/2010
OCTAVIA Combi (1Z5)-2.0 TDI RS	04/2006 → 05/2008
SUPERB (3T4)-2.0 TDI	03/2008 → 03/2010
SUPERB (3T4)-2.0 TDI 16V	01/2009 →
SUPERB (3T4)-3.6 V6 4x4	11/2008 →
SUPERB Station wagon (3T5)-2.0 TDI	10/2009 →
SUPERB Station wagon (3T5)-2.0 TDI 16V	10/2009 →
SUPERB Station wagon (3T5)-3.6 V6 4x4	10/2009 →
VW	
EOS (1F7, 1F8)-2.0 TDI	06/2006 → 05/2008
EOS (1F7, 1F8)-2.0 TFSI	05/2006 →
EOS (1F7, 1F8)-3.2 V6	06/2006 →
GOLF IV (1J1)-3.2 R32 4motion	09/2002 → 05/2004
GOLF PLUS (5M1, 521)-1.9 TDI	01/2005 → 01/2009
GOLF PLUS (5M1, 521)-2.0 TDI	05/2005 → 05/2009
GOLF PLUS (5M1, 521)-2.0 TDI 16V	01/2005 → 01/2009
GOLF V (1K1)-1.9 TDI	10/2003 →
GOLF V (1K1)-1.9 TDI 4motion	08/2004 →
GOLF V (1K1)-2.0 TDI	10/2003 →
GOLF V (1K1)-2.0 TDI 16V	10/2003 →
GOLF V (1K1)-3.2 R32 4motion	11/2005 → 05/2007
GOLF V Variant (1K5)-1.9 TDI	06/2007 →
GOLF V Variant (1K5)-2.0 TDI	06/2007 →
JETTA III (1K2)-1.9 TDI	09/2005 → 02/2006
JETTA III (1K2)-2.0 TDI	10/2005 → 06/2008
JETTA III (1K2)-2.0 TDI 16V	08/2005 → 06/2008
NEW BEETLE (9C1, 1C1)-1.9 TDI	06/2003 → 12/2006
PASSAT (3C2)-2.0 TDI	03/2005 → 02/2006
PASSAT (3C2)-3.2 FSI 4motion	11/2005 →
PASSAT (3C2)-3.6 R36 4motion	04/2007 →
PASSAT CC-3.6 4motion	08/2008 →
PASSAT Variant (3C5)-2.0 TDI	08/2005 →
PASSAT Variant (3C5)-3.2 FSI 4motion	11/2005 →
PASSAT Variant (3C5)-3.6 R36 4motion	04/2007 →
TOURAN (1T1, 1T2, 1T3)-1.9 TDI	08/2003 → 05/2010
TOURAN (1T1, 1T2, 1T3)-2.0 TDI	11/2006 → 05/2010
TOURAN (1T1, 1T2, 1T3)-2.0 TDI 16V	08/2003 →
063521230180 MSN2107 1,7kW 12V	
SEAT	
CORDOBA (6L2)-1.4 TDI	05/2005 → 11/2009
CORDOBA (6L2)-1.9 SDI	12/2004 → 12/2005
IBIZA IV (6L1)-1.4 TDI	05/2005 → 11/2009
IBIZA IV (6L1)-1.9 SDI	11/2004 → 12/2005




063521230180 MSN2107 1,7kW 12V	
SKODA	
FABIA-1.4 TDI	02/2007 → 03/2010
FABIA (6Y2)-1.4 TDI	10/2005 → 04/2007
FABIA (6Y2)-1.9 SDI	11/2004 → 04/2007
FABIA Combi-1.4 TDI	10/2007 → 03/2010
FABIA Combi (6Y5)-1.4 TDI	10/2005 → 12/2007
FABIA Combi (6Y5)-1.9 SDI	11/2004 → 12/2007
FABIA Praktik-1.4 TDI	10/2005 → 12/2007
FABIA Praktik-1.9 SDI	11/2004 → 12/2007
FABIA Tre volumi (6Y3)-1.4 TDI	10/2005 → 12/2007
FABIA Tre volumi (6Y3)-1.9 SDI	11/2004 → 12/2007
ROOMSTER (5J)-1.4 TDI	07/2006 → 03/2010
ROOMSTER Praktik (5J)-1.4 TDI	03/2007 → 03/2010
VW	
GOLF V (1K1)-2.0 D	01/2004 →
GOLF V (1K1)-2.0 SDI	01/2004 → 11/2008
POLO (9N_)-1.4 TDI	04/2005 → 12/2009
POLO (9N_)-1.9 SDI	04/2005 → 12/2009
063521240200 MSN2108 1,8kW 12V	
AUDI	
A4 (8D2, B5)-1.9 TDI	03/2000 → 11/2000
A4 (8E2, B6)-1.9 TDI	12/2000 → 12/2004
A4 Avant (8D5, B5)-1.9 TDI	03/2000 → 09/2001
A4 Avant (8E5, B6)-1.9 TDI	09/2001 → 12/2004
A6 (4B, C5)-1.9 TDI	08/2001 → 11/2003
A6 Avant (4B, C5)-1.9 TDI	08/2001 → 11/2003
VW	
PASSAT (3B2)-1.9 TDI	12/1999 → 11/2000
PASSAT (3B3)-1.9 TDI	11/2000 → 12/2003
PASSAT (3B3)-2.0 TDI	12/2003 → 12/2003
PASSAT Variant (3B5)-1.9 TDI	03/1999 → 12/2003
PASSAT Variant (3B6)-2.0 TDI	12/2003 → 12/2003
063521240220 MSN2109 1,8kW 12V	
SEAT	
AROSA (6H)-1.7 SDI	08/1997 → 10/2003
VW	
LUPO (6X1, 6E1)-1.7 SDI	10/1998 → 10/2001
POLO (6N1)-1.7 SDI	04/1997 → 10/1999
POLO (6N1)-60 1.7 SDI	08/1997 → 10/1999
POLO (6N1)-64 1.9 D	10/1994 → 10/1999
POLO (6N1)-64 1.9 SDI	07/1996 → 10/1999
POLO (6N2)-1.7 SDI	10/1999 → 09/2001
POLO (6N2)-1.9 D	10/1999 → 09/2001
POLO (6N2)-1.9 SDI	10/1999 → 09/2001
POLO Furgonato (6NF)-1.7 SDI	08/1997 → 12/1999




063521240220 MSN2109 1,8kW 12V	
VW	
POLO Furgonato (6NF)-1.9 D	10/1994 → 12/1999
POLO Furgonato (6NF)-1.9 SDI	07/1996 → 12/1999
063521240260 MSN2110 1,8kW 12V	
AUDI	
A2 (8Z0)-1.2 TDI	10/2003 → 08/2005
VW	
LUPO (6X1, 6E1)-1.2 TDI 3L	06/2004 → 07/2005
063521250350 MSN2111 2,0kW 12V	
AUDI	
A3 (8L1)-1.9 TDI	09/1996 → 06/2001
FORD	
GALAXY (WGR)-2.8 i V6	11/1995 → 03/2000
SEAT	
ALHAMBRA (7V8, 7V9)-1.9 TDI	05/1997 → 02/2000
CORDOBA-1.9 D	05/1999 → 08/2002
CORDOBA (6K2/C2)-1.9 D	09/1993 → 08/1996
CORDOBA (6K2/C2)-1.9 SDI	08/1996 → 06/1999
CORDOBA (6K2/C2)-1.9 TD	09/1993 → 08/1996
CORDOBA 2 volumi / Coda spiovente (6K2)-1.9 SDI	06/1999 → 08/2002
CORDOBA Vario (6K5)-1.9 SDI	06/1997 → 08/2002
IBIZA II (6K1)-1.9 D	04/1993 → 08/1996
IBIZA II (6K1)-1.9 SDI	08/1996 → 08/1999
IBIZA II (6K1)-1.9 TD	03/1993 → 08/1996
IBIZA III (6K1)-1.9 SDI	08/1999 → 02/2002
INCA (6K9)-1.7 D	09/1996 → 09/2000
INCA (6K9)-1.9 D	11/1995 → 06/2003
INCA (6K9)-1.9 SDI	12/1995 → 06/2003
LEON (1M1)-1.9 SDI	12/1999 → 10/2003
TOLEDO I (1L)-1.9 D	05/1991 → 03/1999
TOLEDO I (1L)-1.9 SDI	12/1995 → 03/1999
TOLEDO I (1L)-1.9 TD	05/1991 → 04/1997
TOLEDO II (1M2)-1.9 TDI	04/1999 → 07/2004
TOLEDO II (1M2)-2.3 V5	04/1999 → 11/2000
TOLEDO II (1M2)-2.3 V5 20V	05/2001 → 11/2003
SKODA	
OCTAVIA (1U2)-1.9 SDI	06/1997 → 07/2000
OCTAVIA (1U2)-1.9 TDI	09/1996 → 10/2001
OCTAVIA Combi (1U5)-1.9 SDI	08/2000 → 10/2001
OCTAVIA Combi (1U5)-1.9 TDI	07/1998 → 10/2001
VW	
BORA (1J2)-1.9 SDI	10/1998 → 05/2005
BORA (1J2)-1.9 TDI	10/1998 → 06/2001
BORA (1J2)-2.3 V5	10/1998 → 10/2000

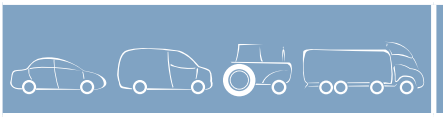


063521250350 MSN2111 2,0kW 12V	
VW	
BORA Station wagon (1J6)-1.9 TDI	05/1999 → 05/2005
BORA Station wagon (1J6)-2.3 V5	05/1999 → 10/2000
CADDY II Furgonato (9K9A)-1.7 SDI	07/1996 → 09/2000
CADDY II Furgonato (9K9A)-1.9 D	11/1995 → 06/2003
CADDY II Furgonato (9K9A)-1.9 SDI	11/1995 → 06/2003
CADDY II Station wagon (9K9B)-1.7 SDI	07/1996 → 09/2000
CADDY II Station wagon (9K9B)-1.9 D	11/1995 → 06/2003
CADDY II Station wagon (9K9B)-1.9 SDI	11/1995 → 06/2003
CORRADO (53I)-2.9 VR6	08/1991 → 07/1995
GOLF III (1H1)-1.9 D	11/1991 → 08/1997
GOLF III (1H1)-1.9 SDI	07/1995 → 08/1997
GOLF III (1H1)-1.9 TD,GTD	11/1991 → 08/1997
GOLF III (1H1)-1.9 TDI	09/1993 → 08/1997
GOLF III (1H1)-2.8 VR6	01/1992 → 08/1997
GOLF III Variant (1H5)-1.9 D	07/1993 → 02/1999
GOLF III Variant (1H5)-1.9 SDI	07/1995 → 02/1999
GOLF III Variant (1H5)-1.9 TD	07/1993 → 02/1999
GOLF III Variant (1H5)-1.9 TDI	03/1994 → 02/1999
GOLF IV (1J1)-1.9 SDI	10/1997 → 05/2004
GOLF IV (1J1)-1.9 TDI	10/1997 → 05/2004
GOLF IV (1J1)-2.3 V5	10/1997 → 10/2000
GOLF IV Variant (1J5)-1.9 SDI	05/1999 → 06/2006
GOLF IV Variant (1J5)-1.9 TDI	05/1999 → 05/2006
GOLF IV Variant (1J5)-2.3 V5	05/1999 → 02/2001
NEW BEETLE (9C1, 1C1)-1.9 TDI	01/1998 → 06/2004
PASSAT (3A2, 35I)-1.9 D	05/1989 → 09/1993
PASSAT (3A2, 35I)-1.9 TD	03/1991 → 08/1996
PASSAT (3A2, 35I)-1.9 TDI	03/1996 → 08/1996
PASSAT (3A2, 35I)-2.8 VR6	06/1991 → 08/1996
PASSAT Variant (3A5, 35I)-1.9 D	05/1989 → 09/1993
PASSAT Variant (3A5, 35I)-1.9 TD	03/1991 → 03/1997
PASSAT Variant (3A5, 35I)-1.9 TDI	10/1993 → 03/1997
PASSAT Variant (3A5, 35I)-2.8 VR6	06/1991 → 03/1997
POLO CLASSIC (6KV2)-57 1.7 SDI	11/1997 → 08/1999
POLO CLASSIC (6KV2)-64 1,9 D	01/1996 → 04/1996
POLO CLASSIC (6KV2)-64 1.9 SDI	12/1995 → 08/1999
POLO CLASSIC (6KV2)-68 1.9 SDI	10/1999 → 09/2001
POLO Variant (6KV5)-1.7 SDI	11/1997 → 08/1999
POLO Variant (6KV5)-1.9 SDI	06/1997 → 09/2001
SHARAN (7M8, 7M9, 7M6)-1.9 TDI	09/1996 → 02/2000
SHARAN (7M8, 7M9, 7M6)-2.8 VR6	09/1995 → 02/2000
TRANSPORTER IV Autobus (70XB, 70XC, 7DB, 7DW)-2.5 TDI	09/1995 → 04/2003
TRANSPORTER IV Furgonato (70XA)-2.5 TDI	09/1995 → 04/2003




063521250350 MSN2111 2,0kW 12V

VW	
TRANSPORTER IV Pianale piatto/ Telaio (70XD)-2.5 TDI	09/1995 → 04/2003
VENTO (1H2)-1.9 D	11/1991 → 12/1997
VENTO (1H2)-1.9 SDI	04/1997 → 12/1997
VENTO (1H2)-1.9 TD	11/1991 → 12/1997
VENTO (1H2)-1.9 TDI	09/1993 → 12/1997
VENTO (1H2)-2.8 VR6	01/1992 → 12/1997

063521250420 MSN2112 2,0kW 12V

AUDI	
A2 (8Z0)-1.4 TDI	02/2000 → 08/2005
A3 (8L1)-1.9 TDI	08/1997 → 09/2001
SEAT	
ALHAMBRA (7V8, 7V9)-1.9 TDI	04/1996 → 02/2000
AROSA (6H)-1.4 TDI	01/2000 → 06/2004
CORDOBA-1.9 D	05/1999 → 09/2002
CORDOBA (6K2/C2)-1.9 TDI	08/1996 → 06/1999
CORDOBA (6L2)-1.4 TDI	10/2002 → 10/2004
CORDOBA (6L2)-1.9 TDI	09/2002 → 10/2004
CORDOBA 2 volumi /Coda spiovente-1.9 D	07/1996 → 04/1999
CORDOBA 2 volumi / Coda spiovente (6K2)-1.9 TDI	06/1999 → 10/2002
CORDOBA Vario (6K5)-1.9 TDI	06/1997 → 08/2002
IBIZA II (6K1)-1.9 TDI	12/1996 → 06/1999
IBIZA III (6K1)-1.9 TDI	08/1999 → 02/2002
IBIZA IV (6L1)-1.4 TDI	05/2002 → 10/2004
IBIZA IV (6L1)-1.9 TDI	02/2002 → 10/2004
LEON (1M1)-1.9 TDI	11/1999 → 06/2006
TOLEDO I (1L)-1.9 TDI	08/1995 → 03/1999
TOLEDO II (1M2)-1.9 TDI	04/1999 → 07/2004
SKODA	
FABIA (6Y2)-1.4 TDI	05/2003 → 10/2004
FABIA (6Y2)-1.9 TDI	03/2003 → 10/2004
FABIA Combi (6Y5)-1.4 TDI	05/2003 → 10/2004
FABIA Combi (6Y5)-1.9 TDI	08/2000 → 10/2004
FABIA Tre volumi (6Y3)-1.4 TDI	05/2003 → 10/2004
FABIA Tre volumi (6Y3)-1.9 TDI	03/2003 → 10/2004
OCTAVIA (1U2)-1.9 TDI	08/1997 → 01/2006
OCTAVIA Combi (1U5)-1.9 TDI	07/1998 → 01/2006
VW	
BORA (1J2)-1.9 TDI	10/1998 → 05/2005
BORA Station wagon (1J6)-1.9 TDI	05/1999 → 05/2005
CADDY II Furgonato (9K9A)-1.9 TDI	09/1996 → 01/2004
CADDY II Station wagon (9K9B)-1.9 TDI	10/1996 → 01/2004
GOLF III (1H1)-1.9 TDI	04/1996 → 08/1997




063521250420 MSN2112 2,0kW 12V

VW	
GOLF III Cabriolet (1E7)-1.9 TDI	08/1995 → 04/1998
GOLF III Variant (1H5)-1.9 TDI	03/1994 → 04/1999
GOLF IV (1J1)-1.9 TDI	10/1997 → 05/2004
GOLF IV Cabriolet (1E7)-1.9 TDI	06/1998 → 12/2001
GOLF IV Variant (1J5)-1.9 TDI	02/2002 → 05/2006
LUPO (6X1, 6E1)-1.4 TDI	01/1999 → 10/2001
NEW BEETLE (9C1, 1C1)-1.9 TDI	01/1998 → 12/2006
NEW BEETLE Cabriolet (1Y7)-1.9 TDI	06/2003 → 09/2010
PASSAT (3A2, 35I)-1.6 TD	08/1991 → 09/1993
PASSAT (3A2, 35I)-1.9 D	05/1989 → 09/1993
PASSAT (3A2, 35I)-1.9 TD	08/1991 → 08/1996
PASSAT (3A2, 35I)-1.9 TDI	10/1993 → 08/1996
PASSAT Variant (3A5, 35I)-1.6 TD	08/1991 → 09/1993
PASSAT Variant (3A5, 35I)-1.9 D	05/1989 → 09/1993
PASSAT Variant (3A5, 35I)-1.9 TD	08/1991 → 05/1997
PASSAT Variant (3A5, 35I)-1.9 TDI	02/1996 → 05/1997
POLO (6N2)-1.4 TDI	10/1999 → 09/2001
POLO (9N_)-1.4 TDI	10/2001 → 05/2005
POLO (9N_)-1.9 TDI	10/2001 → 05/2005
POLO CLASSIC (6KV2)-110 1.9 TDI	08/1998 → 09/2001
POLO CLASSIC (6KV2)-90 1.9 TDI	10/1999 → 09/2001
POLO Tre volumi-1.4 TDI	07/2003 → 11/2004
POLO Variant (6KV5)-1.9 TDI	10/1999 → 09/2001
SHARAN (7M8, 7M9, 7M6)-1.9 TDI	10/1995 → 02/2000
VENTO (1H2)-1.9 TDI	09/1993 → 09/1998

063521250480 MSN2113 2,0kW 12V

AUDI	
A3 (8L1)-S3 quattro	03/1999 → 06/2003
TT (8N3)-1.8 T quattro	10/1998 → 05/2001
TT Roadster (8N9)-1.8 T quattro	10/1999 → 05/2001
FORD	
GALAXY (WGR)-1.9 TDI	04/2000 → 08/2006
GALAXY (WGR)-2.8 V6	04/2000 → 08/2006
SEAT	
ALHAMBRA (7V8, 7V9)-1.9 TDI	06/2000 → 03/2010
ALHAMBRA (7V8, 7V9)-1.9 Tdi 4x4	06/2005 → 11/2008
ALHAMBRA (7V8, 7V9)-2.0 TDI	11/2005 → 03/2010
ALHAMBRA (7V8, 7V9)-2.8 V6	06/2000 → 03/2010
CORDOBA (6L2)-1.9 TDI	10/2002 → 10/2004
IBIZA IV (6L1)-1.9 TDI	02/2002 → 10/2004
IBIZA IV (6L1)-1.9 TDI Cupra R	03/2004 → 10/2004
LEON (1M1)-1.8 20V T	09/2000 → 07/2001
LEON (1M1)-1.9 TDI	02/2001 → 06/2006
LEON (1M1)-2.8	05/2002 → 04/2004




063521250480 MSN2113 2,0kW 12V

SEAT	
TOLEDO II (1M2)-1.9 TDI	10/2000 → 07/2004
SKODA	
FABIA (6Y2)-1.9 TDI RS	06/2003 → 10/2004
OCTAVIA (1U2)-1.9 TDI	01/2003 → 09/2004
OCTAVIA Combi (1U5)-1.9 TDI	01/2003 → 09/2004
VW	
BORA (1J2)-1.8 T	05/2000 → 05/2005
BORA (1J2)-1.9 TDI	01/2000 → 05/2005
BORA (1J2)-2.3 V5	10/2000 → 05/2005
BORA (1J2)-2.8 V6 4motion	05/1999 → 04/2001
BORA Station wagon (1J6)-1.8 T	05/2000 → 05/2005
BORA Station wagon (1J6)-1.9 TDI	01/2000 → 05/2005
BORA Station wagon (1J6)-2.3 V5	10/2000 → 05/2005
BORA Station wagon (1J6)-2.8 V6 4motion	01/2000 → 05/2005
GOLF IV (1J1)-1.8 T	10/1997 → 05/2003
GOLF IV (1J1)-1.9 TDI	05/1999 → 05/2004
GOLF IV (1J1)-2.3 V5	10/2000 → 05/2004
GOLF IV (1J1)-2.8 V6 4motion	05/1999 → 01/2002
GOLF IV (1J1)-3.2 R32 4motion	09/2002 → 05/2004
GOLF IV Variant (1J5)-1.8 T	02/2002 → 06/2006
GOLF IV Variant (1J5)-1.9 TDI	08/1999 → 06/2006
GOLF IV Variant (1J5)-2.3 V5	10/2000 → 06/2006
GOLF IV Variant (1J5)-2.8 V6 4motion	05/1999 → 06/2006
NEW BEETLE (9C1, 1C1)-1.6	06/2002 → 12/2010
NEW BEETLE (9C1, 1C1)-1.8 T	10/1999 → 10/2000
NEW BEETLE (9C1, 1C1)-2.0	06/2001 → 09/2010
NEW BEETLE (9C1, 1C1)-RSI 3.2 (1C9)	10/2000 → 05/2001
POLO (9N_)-1.9 TDI	11/2003 → 05/2005
SHARAN (7M8, 7M9, 7M6)-1.9 TDI	03/1999 → 11/2008
SHARAN (7M8, 7M9, 7M6)-2.0 TDI	11/2005 → 03/2010
SHARAN (7M8, 7M9, 7M6)-2.8 V6 24V	05/2000 → 03/2010

063522187740 MSN2005 2,3kW 12V

IVECO	
DAILY I Autobus-A 40-10 (95719111, 95719131, 95719311, 95719315, 95719317,..)	09/1996 → 05/1999
DAILY I Autobus-A 40-12 (95819311, 95819315, 95819317, 95819331)	05/1996 → 05/1999
DAILY I Autobus-A 45-10 (95739111, 95739131, 95739311, 95739317, 95739331)	05/1996 → 05/1999
DAILY I Cassone / Furgonato / Promiscuo-30-10	01/1997 → 05/1999
DAILY I Cassone / Furgonato / Promiscuo-30-10 C	01/1997 → 05/1999

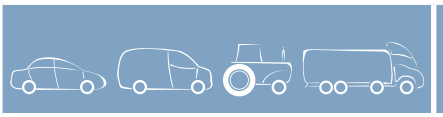


063522187740 MSN2005 2,3kW 12V

IVECO	
DAILY I Cassone / Furgonato / Promiscuo-30-8 (10014131, 10014132, 10014137, 10014231, 10014232, 1001..)	01/1978 → 05/1999
DAILY I Cassone / Furgonato / Promiscuo-30-8 V (14914111, 14914117, 14914211, 14914217, 14915111, 14..)	09/1998 → 05/1999
DAILY I Cassone / Furgonato / Promiscuo-35-10 (10314204, 10314211, 10314212, 10314217, 10314411, 103..)	02/1985 → 05/1999
DAILY I Cassone / Furgonato / Promiscuo-35-8 (10034131, 10034132, 10034137, 10034224, 10034231, 1003..)	04/1978 → 05/1999
DAILY I Cassone / Furgonato / Promiscuo-40-10 4x4 (15214104, 15214111, 15214117, 15215111)	01/1997 → 05/1999
DAILY I Cassone / Furgonato / Promiscuo-40-8 V	01/1983 → 06/1989
DAILY I Cassone / Furgonato / Promiscuo-45-10 V (10334204, 10334211, 10334212, 10334217, 10334404)	02/1985 → 06/1989
DAILY I Cassone / Furgonato / Promiscuo-49-10 V (10354204, 10354211, 10354212, 10354217, 10354404, 1..)	02/1985 → 06/1989
DAILY I Cassone / Furgonato / Promiscuo-49-12 V (15154204, 15154211, 15154215, 15154217, 15154404, 1..)	05/1996 → 05/1999
DAILY I Cassone / Furgonato / Promiscuo-59-12 V (15174404, 15174411, 15174415, 15174417)	05/1996 → 05/1999
DAILY I Pianale piatto/Telaio-30-10	01/1998 → 05/1999
DAILY I Pianale piatto/ Telaio-30-8 (10011131, 10011132, 10011231, 10011232, 10011237, 1001..)	01/1978 → 05/1999
DAILY I Pianale piatto/Telaio-35-10	01/1989 → 12/1996
DAILY I Pianale piatto/ Telaio-35-10 (10310311, 10311111, 10311112, 10311117, 10311211, 103..)	02/1985 → 05/1999
DAILY I Pianale piatto/ Telaio-35-12 (13110131, 13110211, 13110231, 13110311, 13110312, 131..)	01/1990 → 05/1999
DAILY I Pianale piatto/ Telaio-35-8 (10031131, 10031132, 10031137, 10031224, 10031231, 1003..)	04/1978 → 05/1999
DAILY I Pianale piatto/Telaio-40-10 W 4x4	01/1997 → 05/1999
DAILY I Pianale piatto/Telaio-40-8	01/1983 → 06/1989
DAILY I Pianale piatto/ Telaio-45-10 (10331211, 10331212, 10331217, 10331304, 10331311, 103..)	02/1985 → 06/1989
DAILY I Pianale piatto/Telaio-49-10 (10350211, 10350304, 10350311, 10350404, 10350411, 103..)	02/1985 → 05/1999




063522187740 MSN2005 2,3kW 12V

IVECO	
DAILY I Pianale piatto/ Telaio-49-12 (15150211, 15150311, 15150404, 15150411, 15151204, 151..)	05/1996 → 05/1999
DAILY I Pianale piatto/ Telaio-59-12 (15170211, 15170304, 15170311, 15170504, 15170511, 151..)	05/1996 → 05/1999
DAILY I Ribaltabile-35-10 K (15030111, 15030211, 15030311, 15031111, 15031117, 1..)	01/1997 → 05/1999
DAILY I Ribaltabile-35-12 K (15130311, 15130411, 15131111, 15131204, 15131211, 1..)	09/1996 → 08/1998
DAILY I Ribaltabile-35-8 K (14930304, 14931104, 14931111, 14931115, 14931204, 14..)	09/1998 → 05/1999
DAILY I Ribaltabile-49-10 K (15056204, 15056211, 15056304, 15056311)	05/1996 → 05/1999
DAILY I Ribaltabile-49-12 K	05/1996 → 05/1999
DAILY I Ribaltabile-59-12 K (15176211, 15176304, 15176311, 15176315, 15176317, 1..)	05/1996 → 05/1999

063522188120 MSN2033 2,3kW 12V

NISSAN	
TRADE Pianale piatto/Telaio-2.8 D	12/1986 → 12/1987

063522190140 MSN2034 2,2kW 24V

CATERPILLAR	
Industriali-Tutte	

063522230130 MSN2006 2,3kW 12V

CITROEN	
JUMPER Autobus (230P)-2.8 HDi	09/2000 → 02/2002
JUMPER Autobus (244, Z_)-2.8 HDi	04/2002 → 05/2006
JUMPER Furgonato (230L)-2.8 HDi	09/2000 → 02/2002
JUMPER Furgonato (244)-2.8 HDi	04/2002 → 05/2006
JUMPER Pianale piatto/Telaio (230)-2.8 HDi	09/2000 → 05/2006
FIAT	
DUCATO Autobus (230)-2.8 D	04/2000 → 03/2002
DUCATO Autobus (230)-2.8 JTD	11/2000 → 03/2002
DUCATO Autobus (230)-2.8 TDI	04/2000 → 02/2002
DUCATO Autobus (244, Z_)-2.3 JTD	04/2002 → 08/2006
DUCATO Autobus (244, Z_)-2.8 JTD	04/2002 → 08/2006
DUCATO Furgonato (230L)-2.8 D	04/2000 → 02/2002
DUCATO Furgonato (230L)-2.8 iDTD 4x4	04/2000 → 09/2001
DUCATO Furgonato (230L)-2.8 JTD	11/2000 → 03/2002
DUCATO Furgonato (230L)-2.8 TDI	04/2000 → 02/2002
DUCATO Furgonato (244)-2.3 JTD	04/2002 → 08/2006
DUCATO Furgonato (244)-2.8 JTD	04/2002 → 08/2006
DUCATO Pianale piatto/Telaio (230)-2.8 D	04/2000 → 02/2002
DUCATO Pianale piatto/Telaio (230)-2.8 JTD	11/2000 → 03/2002

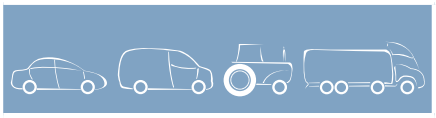


063522230130 MSN2006 2,3kW 12V

FIAT	
DUCATO Pianale piatto/Telaio (230)-2.8 TDI	04/2000 → 03/2002
DUCATO Pianale piatto/Telaio (244)-2.3 JTD	04/2002 → 08/2006
DUCATO Pianale piatto/Telaio (244)-2.8 JTD	04/2002 → 08/2006
PEUGEOT	
BOXER Autobus (230P)-2.8 HDI	11/2000 → 02/2002
BOXER Autobus (244, Z_)-2.8 HDi	04/2002 → 05/2006
BOXER Furgonato (230L)-2.8 HDi	10/2000 → 02/2002
BOXER Pianale piatto/Telaio (244)-2.8 HDi	04/2002 → 05/2006
BOXER Pianale piatto/Telaio (ZCT_)-2.8 HDi	10/2000 → 02/2002

063522230160 MSN2035 2,3kW 12V

BOMAG	
Tandem Rollers-BW - 135AD	→
Tandem Rollers-BW - 138AD	→
DEUTZ	
BF 3L 2011-Tutte	→
BF 3M 2011-Tutte	→
BF 4L 1011-Tutte	01/1995 →
BF 4L 1011 FT-Tutte	→
BF 4L 2011-Tutte	→
BF 4M 2011-Tutte	→
D 2.9 L4-Tutte	→
D 2011 L2-Tutte	→
D 2011 L3-Tutte	→
D 2011 L4-Tutte	→
F 2L 201-Tutte	→
F 2M 2011-Tutte	→
F 3L 2011-Tutte	→
F 3M 1011-Tutte	→
F 4L 2011-Tutte	→
F 4M 2011-Tutte	→
TCD 2011 L4-Tutte	→
TCD 3.6 L4-Tutte	→
TD 2011 - L4-Tutte	→
TD 3.6 L4-Tutte	→
TD/TCD2.9L4-Tutte	→
JCB LANDPOWER	
TELETRUKS-TLT35	→
WASTEMSTER TELETRUKS-TLT35-WM	→
VOLVO	→
LOADERS-L30B	→

063522235040 MSN2036 2,6kW 12V

AGRIFULL	
SERIE 40-45DT	02/1987 → 05/2005
SERIE 50-50DT	07/1987 → 01/2005

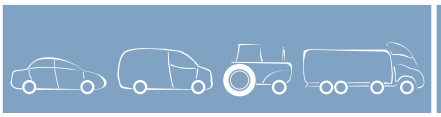


063522235040 MSN2036 2,6kW 12V

AGRIFULL	
SERIE 500-500 Frutteto / Vigneto	09/1980 → 12/1983
SERIE 55-55 C Vigneto - DT Frutteto	03/1985 → 05/2005
SERIE 60-C/CL/DT Frutteto	03/1985 → 01/2006
SERIE 80-80.46	03/1984 → 12/1984
SERIE 80-80.56	04/1984 → 12/1984
BENFRA	
MOVIMENTO TERRA-1-6 1.5	07/1987 → 07/2005
FIAT	
25 - H2-Tutte	11/1985 → 04/1989
25 - H4-Tutte	11/1985 → 04/1989
25 - M2-Tutte	11/1985 → 12/1988
25 - M4-Tutte	11/1985 → 12/1988
30 - H2/H4-Tutte	11/1985 → 04/1989
30 - M2/M4-Tutte	11/1985 → 12/1988
55.90-Tutte	03/1984 → 08/1988
BI - 20C/25C/30C-Tutte	01/1980 → 12/1987
BIM - 20/25-Tutte	01/1972 → 12/1982
DIM - 20/25-Tutte	01/1971 → 12/1982
DM - 12/15-Tutte	01/1971 → 12/1982
SERIE 400-474	04/1983 → 12/1984
SERIE 400-465C	06/1982 → 12/1984
SERIE 400-466DT	02/1982 → 12/1984
SERIE 400-480S/DT	06/1978 → 03/1982
SERIE 50 Frutteto-55.46/65/66 2RM DT - SERIE 50	03/1984 → 08/1988
SERIE 50 Vigneto-55.46/65/66 DT - SERIE 50	03/1984 → 08/1988
SERIE 50 Vigneto-55.46/65/66 LP-DT	03/1984 → 08/1988
SERIE 500-- 580DT	12/1977 → 02/1984
SERIE 500-500DT	03/1976 → 03/1982
SERIE 500-500S/DT	06/1978 → 03/1982
SERIE 500-505S	12/1980 → 07/1982
SERIE 500-540S/DT	06/1978 → 03/1982
SERIE 500-565C	06/1982 → 12/1984
SERIE 500-566DT	02/1982 → 12/1984
SERIE 500-570DT/F/V	12/1977 → 12/1984
SERIE 60-60.90/DT	03/1984 → 08/1988
SERIE 60 Vigneto-55.46/65/66 DT	03/1984 → 08/1988
FIAT GEOTECH	
SERIE 35-70-45.66 2RM DT	01/1985 → 01/2005
SERIE 35-70-55.46/56/65/66 DT	09/1984 → 01/2004
SERIE 35-70-55.66/DT	04/1985 →
SERIE 35-70-55.75/90	09/1984 → 01/2004
SERIE 35-70-55.86 F/V	04/1985 →

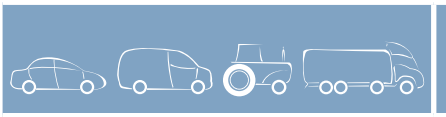


063522235040 MSN2036 2,6kW 12V

FIAT GEOTECH	
SERIE 35-70-60.46/56/65/66/75	09/1984 →
SERIE 35-70-60.75-85F/V-86F/V-90DT	09/1984 →
SERIE 35-70-60.88	01/1989 → 12/2004
SERIE 35-70 Frutteto-55.46/65/66 2RM DT	04/1985 →
SERIE 35-70 Vigneto-45.66 DT	01/1985 → 01/2005
SERIE 35-70 Vigneto-55.46/65/66 DT	04/1985 →
FIAT OM CARRELLI ELEV	
DI - 12/15-Tutte	01/1971 → 12/1982
FORD NEW HOLLAND	
FARM-3830	01/1992 → 01/1999
FARM-4030	01/1992 → 01/1996
FARM-3010S	01/1996 → 01/2000
FARM-4010S	01/1996 → 01/2000
FARM-5010S	01/1996 → 01/2000
TN60DA-Tutte	→
TN70DA-Tutte	→
TN75DA-Tutte	→
UTILITY-TN55	01/1999 → 01/2004
UTILITY-TN55D	01/1999 → 01/2004
UTILITY-TN60A/DA/SA	→
UTILITY-TN60VA	01/1999 → 01/2003
UTILITY-TN65F/G/D	01/1999 → 01/2003
UTILITY-TN65V	01/2000 → 01/2004
UTILITY-TN70	01/1999 → 01/2003
UTILITY-TN70A	→
UTILITY-TN70D	01/2000 → 01/2003
UTILITY-TN70DA	→
UTILITY-TN70S	01/2000 → 01/2003
UTILITY-TN70SA	→
UTILITY-TN70VA	→
UTILITY-TN75	01/2000 → 01/2003
UTILITY-TN75A	→
UTILITY-TN75D	01/1999 → 01/2003
UTILITY-TN75DA	→
UTILITY-TN75S	01/1999 → 12/2003
UTILITY-TN75SA	→
UTILITY-TN75V	01/2000 → 01/2004
UTILITY-TN75VA	→
IVECO	
25 - H2/H4-Tutte	11/1985 → 04/1989
25 - M2/M4-Tutte	11/1985 → 04/1989
30 - H2/H4-Tutte	11/1985 → 04/1989
30 - M2/M4-Tutte	11/1985 → 04/1989




063522235040 MSN2036 2,6kW 12V	
IVECO	
AIFO 8035-8035 - 2300	06/1973 → 06/1983
AIFO 8041-8041 - 4250	06/1979 → 06/1983
AIFO 8141-8141 - 61200	10/1981 → 05/1983

063522300060 MSN2038 3,0kW 12V	
IVECO	
MK-110-13 A	01/1983 → 12/1991
MK-110-13 AH	01/1983 → 12/1985
MK-130-13 A	01/1983 → 12/1991
MK-130-13 AH	01/1983 → 12/1991
MK-75-9 A	01/1983 → 05/1989
MK-75-9 H	01/1983 → 08/1985
MK-80-13 A	01/1983 → 12/1991
MK-80-13 AH	01/1983 → 12/1991
MK-80-13 AT	01/1983 → 12/1991
MK-80-13 AW	01/1983 → 12/1991
MK-80-9 A	01/1983 → 02/1986
MK-80-9 AH	01/1983 → 02/1986
MK-90-13 A	01/1983 → 12/1991
MK-90-13 AH	01/1983 → 12/1991

063522300070 MSN2039 3,0kW 12V	
FORD NEW HOLLAND	
5635-Tutte	01/1996 → 01/1999
6635-Tutte	01/1996 → 01/1999
7530-Tutte	01/1992 → 01/1996
7635-Tutte	01/1996 → 01/1999
5530HC-Tutte	01/1992 → 01/1996
6530HC-Tutte	01/1992 → 01/1997
CRAWLERS-TK100A	→
CRAWLERS-TK76	01/1999 → 01/2004
CRAWLERS-TK80A	→
CRAWLERS-TK80MA	→
CRAWLERS-TK85	01/1999 → 01/2004
CRAWLERS-TK85M	01/1999 → 01/2004
CRAWLERS-TK90A	→
CRAWLERS-TK90MA	→
FARM-4230	01/1992 → 01/1996
FARM-4835	01/1995 → 01/1998
FARM-4330V	01/1996 → 01/2000
FARM-4430N	01/1992 → 01/1998
FARM-4430V	01/1997 → 01/1998
L60-Tutte	01/1996 → 01/1997
L65-Tutte	01/1996 → 01/1997
L75-Tutte	01/1996 → 01/1997
L85-Tutte	01/1996 → 01/1997




063522300070 MSN2039 3,0kW 12V	
FORD NEW HOLLAND	
L95-Tutte	01/1996 → 01/1997
Telescopic Loader-LM640	→
TL100-Tutte	01/1999 → 01/2004
TL55-Tutte	01/1999 → 01/2004
TL60-Tutte	01/1999 → 01/2004
TL65-Tutte	01/1999 → 01/2004
TL70-Tutte	01/1999 → 12/1975
TL80-Tutte	01/1999 → 01/2004
TL80A-Tutte	01/1997 →
TL90-Tutte	01/1999 → 01/2004
TN90G-Tutte	01/1997 → 01/2001
TT55-Tutte	→
TT60A-Tutte	→
TT65-Tutte	→
TT75-Tutte	→
TT75A-Tutte	→
UTILITY-TN70F	01/2001 → 01/2004
UTILITY-TN75F	01/1997 → 01/2001
UTILITY-TN75FA	→
UTILITY-TN80F	01/2001 → 01/2004
UTILITY-TN85FA	→
UTILITY-TN95F	01/2001 → 01/2004
UTILITY-TN95FA	→
UTILITY-TN95VA	→

063522300090 MSN2040 3,0kW 12V	
AGRIFULL	
100 DT-Tutte	08/1985 →
110 DT-Tutte	05/1986 →
140 DT-Tutte	05/1985 →
SERIE 90-90 DT	05/1985 →
FIAT	
1180-Tutte	01/1980 → 12/1983
1280-Tutte	04/1981 → 12/1983
1580-Tutte	01/1980 → 12/1983
1880-Tutte	01/1980 → 12/1983
100.90-Tutte	06/1984 → 08/1988
110.90-Tutte	11/1986 → 08/1988
115.90-Tutte	01/1984 → 08/1988
130.90-Tutte	01/1984 → 08/1988
140.90-Tutte	01/1984 → 08/1988
1580 TURBO-Tutte	01/1983 → 12/1983
160.90-Tutte	01/1984 → 08/1988
180.90-Tutte	05/1988 → 08/1988
880-5-Tutte	03/1980 → 06/1984

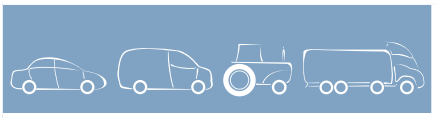


063522300090 MSN2040 3,0kW 12V	
FIAT	
90.90-Tutte	06/1984 → 08/1988
95.55-Tutte	10/1984 → 08/1988
955-C-Tutte	02/1981 → 12/1984
980 DT-Tutte	01/1980 → 06/1984
FIAT OM CARRELLI ELEV	
DI - 130-Tutte	07/1981 → 12/1989
FORD NEW HOLLAND	
8430 DT-Tutte	12/1993 →
8630 DT-Tutte	12/1993 →
IVECO	
160 A 13 FL-Tutte	01/1983 → 11/1984
AIFO 8360-8360.05.200	→
AIFO 8361-8361.05.500	→
AIFO 8361-8361.05.500/530	→
AIFO 8361-8361.05.530	→
AIFO 8361-8361.25.500	→
EURO 110-Tutte	01/1987 → 08/1988
EURO 120 TA-Tutte	01/1987 → 08/1988
EURO 220-Tutte	01/1987 → 08/1988
EURO 220 T-Tutte	01/1987 → 09/1988
EURO 230 T-Tutte	01/1987 → 09/1988
EURO 335 T-Tutte	01/1987 → 09/1988
EURO 340 T-Tutte	01/1987 → 08/1988
EURO 435 T-Tutte	01/1987 → 08/1988
EURO 450 T-Tutte	01/1987 → 09/1988
EURO TURBO-10-14	10/1988 → 09/1990
EURO TURBO-12-14, AS	10/1988 → 09/1990
EURO TURBO-13-14, AS	01/1990 → 12/1990
EURO TURBO-15-14, AS	10/1988 → 12/1990
EURO TURBO-18-14	10/1988 → 09/1990
EURO TURBO-18-16	02/1990 → 12/1990
EURO TURBO-23-16 T	10/1988 → 12/1990
GAMMA Z-Z 110	06/1986 → 01/1987
GAMMA Z-Z 120 TA	02/1986 → 01/1987
GAMMA Z-Z 220	06/1986 → 01/1987
GAMMA Z-Z 220 T	02/1986 → 01/1987
GAMMA Z-Z 230 T	07/1986 → 01/1987
GAMMA Z-Z 235 T	10/1986 →
GAMMA Z-Z 340 T	06/1986 → 01/1987
LAVERDA	
3700-Tutte	01/1983 → 12/1985
3790-Tutte	06/1985 →
3850-Tutte	04/1985 →
3890-Tutte	03/1986 →

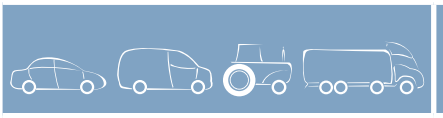


063522300090 MSN2040 3,0kW 12V	
NEW HOLLAND	
100.90-Tutte	08/1988 →
110.90-Tutte	08/1988 →
115.90-Tutte	08/1988 → 10/1990
130.90-Tutte	08/1988 → 10/1990
140.90-Tutte	08/1988 →
160.90-Tutte	08/1988 →
180.90-Tutte	08/1988 →
8830 DT-Tutte	12/1993 →
90.90-Tutte	08/1988 → 12/1991
95.55-Tutte	08/1988 → 12/1991
F 100-Tutte	09/1990 →
F 110-Tutte	09/1990 → 02/1993
F 120-Tutte	09/1990 →
F 130-Tutte	09/1990 →
F 140-Tutte	03/1993 →
063522310030 MSN2042 4,0kW 24V	
MERCEDES-BENZ	
LK/LN2-709	03/1984 → 02/1993
LK/LN2-711	03/1994 → 12/1998
LK/LN2-809	03/1984 → 02/1993
LK/LN2-811	03/1994 → 12/1998
LK/LN2-914	03/1984 → 02/1993
LK/LN2-917	03/1994 → 12/1998
LK/LN2-1314	07/1984 → 12/1998
LK/LN2-1724	01/1991 → 12/1998
LK/LN2-1114 A	02/1987 → 02/1993
LK/LN2-1114 AK	02/1987 → 12/1998
LK/LN2-1114 K	03/1984 → 12/1998
LK/LN2-1114 S	03/1984 → 12/1998
LK/LN2-1114,1114 L	03/1984 → 12/1998
LK/LN2-1117 A	06/1987 → 12/1998
LK/LN2-1117 AK	04/1984 → 12/1992
LK/LN2-1117 K	04/1984 → 12/1992
LK/LN2-1117 O,1117 LO	04/1984 → 12/1998
LK/LN2-1117 S,1117 LS	03/1984 → 12/1998
LK/LN2-1117,1117 L	03/1984 → 12/1998
LK/LN2-1120 AF	02/1987 → 12/1998
LK/LN2-1120 F	02/1990 → 12/1998
LK/LN2-1120 L	08/1984 → 02/1993
LK/LN2-1120 O,1120 LO	02/1992 → 12/1998
LK/LN2-1120 S,1120 LS	06/1984 → 12/1998
LK/LN2-1120,1120 L	06/1984 → 12/1998
LK/LN2-1124 AF	03/1992 → 12/1998
LK/LN2-1124 F	03/1992 → 12/1998





063522310030 MSN2042 4,0kW 24V

MERCEDES-BENZ	
LK/LN2-1217 KO	03/1994 → 12/1998
LK/LN2-1314 AK	06/1987 → 12/1998
LK/LN2-1314 K	07/1984 → 02/1993
LK/LN2-1314 KO	07/1984 → 09/1995
LK/LN2-1317 AK	12/1992 → 12/1998
LK/LN2-1317 AK	06/1987 → 12/1998
LK/LN2-1317 K	08/1984 → 02/1993
LK/LN2-1317 KO	03/1994 → 12/1998
LK/LN2-1317 S,1317 LS	08/1984 → 12/1998
LK/LN2-1317,1317 L	08/1984 → 12/1998
LK/LN2-1320 AK	12/1992 → 12/1998
LK/LN2-1320 L	12/1992 → 12/1998
LK/LN2-1320 S,1320 LS	10/1984 → 02/1993
LK/LN2-1320,1320 L	10/1984 → 02/1993
LK/LN2-1320,1320 L	01/1984 → 02/1993
LK/LN2-1324 L	01/1991 → 12/1998
LK/LN2-1324 S,1324 LS	01/1991 → 12/1998
LK/LN2-1324,1324 L	01/1991 → 12/1998
LK/LN2-1514 K	01/1989 → 12/1992
LK/LN2-1514,1514 L	01/1989 → 12/1998
LK/LN2-1517 K	12/1992 → 12/1998
LK/LN2-1517,1517 L	12/1992 → 12/1998
LK/LN2-1520,1520 L	01/1989 → 12/1998
LK/LN2-1520,1520 L	01/1984 → 12/1998
LK/LN2-1524,1524 L	02/1991 → 12/1998
LK/LN2-2020 L	01/1984 → 12/1998
LK/LN2-2024 L	03/1994 → 12/1998
LK/LN2-709 K	03/1984 → 10/1990
LK/LN2-809 K	03/1984 → 02/1993
LK/LN2-811 K	03/1994 → 12/1998
LK/LN2-814 F	05/1986 → 12/1998
LK/LN2-814 K	03/1984 → 12/1998
LK/LN2-814 O, 814 LO	12/1986 → 12/1998
LK/LN2-814 S	03/1984 → 12/1998
LK/LN2-814,814L	03/1984 → 12/1998
LK/LN2-817 F	03/1984 → 12/1998
LK/LN2-817 K	01/1986 → 12/1998
LK/LN2-817 O, 817 LO	01/1986 → 12/1998
LK/LN2-817 S,817 LS	02/1992 → 12/1998
LK/LN2-817,817 L	02/1992 → 12/1998
LK/LN2-914 AK	02/1987 → 02/1993
LK/LN2-914 AK	02/1987 → 12/1998
LK/LN2-914 K	03/1984 → 12/1998
LK/LN2-914 KO	01/1994 → 12/1998





063522310030 MSN2042 4,0kW 24V

MERCEDES-BENZ	
LK/LN2-917 AF	11/1992 → 12/1998
LK/LN2-917 AK	03/1994 → 12/1998
LK/LN2-917 K	03/1994 → 12/1998
LK/LN2-917 KO	03/1994 → 12/1998
LK/LN2-O 1114 ,O 1114 L	12/1985 → 12/1998
LK/LN2-O 814, O 814 L	03/1994 → 12/1998
O 402-O 402	02/1986 → 12/1991
T2/LN1 Cabina con motore-809 DT (670.199)	02/1992 → 12/1994
T2/LN1 Cassone / Furgonato / Promiscuo-609 D (668.061, 668.062, 668.063)	04/1986 → 12/1994
T2/LN1 Cassone / Furgonato / Promiscuo-611 D (668.061, 668.062, 668.063)	06/1994 → 12/1994
T2/LN1 Cassone / Furgonato / Promiscuo-709 D (669.061, 669.062, 669.063)	04/1986 → 12/1994
T2/LN1 Cassone / Furgonato / Promiscuo-711 D (669.361, 669.362, 669.363)	04/1986 → 12/1994
T2/LN1 Cassone / Furgonato / Promiscuo-809 D (670.061, 670.062, 670.063)	02/1992 → 12/1994
T2/LN1 Cassone / Furgonato / Promiscuo-811 D (670.362, 670.363)	06/1994 → 12/1994
T2/LN1 Cassone / Furgonato / Promiscuo-814 D (670.364, 670.365, 670.366)	11/1987 → 12/1994
T2/LN1 Cassone / Furgonato / Promiscuo-814 DA 4x4 (670.464, 670.465)	01/1991 → 12/1994
T2/LN1 Pianale piatto/Telaio-609 D (668.001, 668.002, 668.003)	04/1986 → 12/1994
T2/LN1 Pianale piatto/Telaio-611 D (668.001, 668.002, 668.003)	06/1994 → 12/1994
T2/LN1 Pianale piatto/Telaio-709 D (669.000, 669.001, 669.002, 669.003, 669.041)	04/1986 → 12/1994
T2/LN1 Pianale piatto/Telaio-711 D (669.301, 669.302, 669.303)	04/1986 → 12/1994
T2/LN1 Pianale piatto/Telaio-809 D (670.001, 670.002, 670.003)	02/1992 → 12/1994
T2/LN1 Pianale piatto/Telaio-811 D (670.302, 670.303)	04/1986 → 12/1994
T2/LN1 Pianale piatto/Telaio-814 D (670.312, 670.313)	11/1987 → 12/1994
T2/LN1 Pianale piatto/Telaio-814 DA 4x4 (670.411, 670.412)	01/1991 → 12/1994
T2/LN1 Ribaltabile-609 DK (668.041, 668.042)	04/1986 → 12/1994

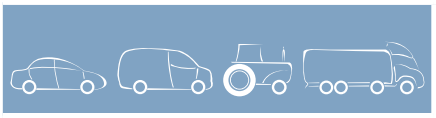


063522310030 MSN2042 4,0kW 24V	
MERCEDES-BENZ	
T2/LN1 Ribaltabile-611 DK (668.041, 668.042)	06/1994 → 12/1994
T2/LN1 Ribaltabile-709 DK (669.041, 669.042)	04/1986 → 12/1994
T2/LN1 Ribaltabile-809 DK (670.041, 670.042)	02/1992 → 12/1994
T2/LN1 Ribaltabile-811 DK (670.341, 670.342)	04/1986 → 12/1994
UNIMOG-U 1250L	05/1988 → 02/2001
UNIMOG-U 1350L	05/1988 → 02/2001
UNIMOG-U 1400	01/1994 → 04/2000
UNIMOG-U 140L	07/1992 →
UNIMOG-U 1550L	05/1988 → 04/2000
UNIMOG-U 1600	05/1991 → 09/2002
UNIMOG-U 1650,U 1650L	09/1989 → 02/2001
UNIMOG-U 1700	01/1992 → 02/2001
UNIMOG-U 1700T	09/1988 → 02/2001
UNIMOG-U 1750,U 1750L	09/1988 → 02/2001
UNIMOG-U 1800	04/1992 → 08/2002
UNIMOG-U 1800T	04/1992 → 08/2002
UNIMOG-U 1850,U 1850L	04/1992 → 08/2002
UNIMOG-U 2100	09/1989 → 02/2001
UNIMOG-U 2100T	01/1992 → 02/2001
UNIMOG-U 2150	09/1989 → 02/2001
UNIMOG-U 2150,U 2150L	05/1991 → 02/2001
UNIMOG-U 2400	05/1991 → 08/2002
UNIMOG-U 2400TG	07/1993 → 08/2002
UNIMOG-U 2450,U 2450L	07/1993 → 08/2002
UNIMOG-U 2450L	07/1993 → 08/2002
063522310050 MSN2043 4,0kW 24V	
DEUTZ	
2012 L06 4V-Tutte	→
2013 L06 4V-Tutte	→
BF 3L 914-Tutte	→
BF 4L 2011-Tutte	→
BF 4L 2012-Tutte	→
BF 4L 914-Tutte	→
BF 4M 1013-Tutte	→
BF 4M 2012-Tutte	→
BF 4M 2012 C-Tutte	→
BF 6L 914 C-Tutte	→
BF 6M 1013-Tutte	→

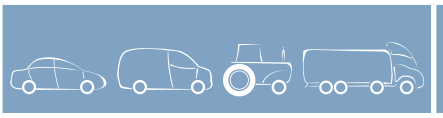


063522310050 MSN2043 4,0kW 24V	
DEUTZ	
BF 6M 1013 EC-Tutte	→
BF 6M 2012 C-Tutte	→
BFM 1015-Tutte	→
D 914 L3-Tutte	→
D 914 L4-Tutte	→
D 914 L5-Tutte	→
D 914 L6-Tutte	→
F 3L 914-Tutte	→
F 4L 914-Tutte	→
F 5L 914-Tutte	→
F 6L 914-Tutte	→
TCD 914 L6-Tutte	→
HITTNER	
Ecotrac-Ecotrac - 120	→
NORMET	
CONCRETE SPRAYING-SPRAYMEC - 1050WPC	→
CONCRETE SPRAYING-SPRAYMEC - 6050WP	→
TRANSMIXER-UTIMEC - LF500	→
TRANSMIXER-UTIMEC - LF600	→
TRANSMIXER-UTIMEC - MF500	→
ULTILIFT-6330X	→
SANDVIK	
UNDERGROUND-AXERA 5-126	→
UNDERGROUND-ROBOLT 5-126	→
UNDERGROUND-SOLO 5-7C/5-5V	→
063522310100 MSN2044 4,0kW 24V	
IVECO	
Zeta-79-13	01/1983 → 06/1983
Zeta-79-14	07/1983 → 11/1985
Zeta-79-14 H	07/1983 → 11/1985
Zeta-79-14 V	07/1983 → 11/1985
063522310110 MSN2045 4,0kW 24V	
IVECO	
EuroCargo-100 E 15 K	01/1991 → 08/2000
EuroCargo-100 E 18	01/1991 → 11/2000
EuroCargo-100 E 18 K	01/1991 → 11/2000
EuroCargo-120 E 15	12/1991 → 07/2000
EuroCargo-120 E 15 K	01/1992 → 07/2000
EuroCargo-120 E 18	01/1992 → 07/2000
EuroCargo-120 E 18 K	01/1992 → 07/2000
EuroCargo-130 E 15	01/1994 → 07/2000
EuroCargo-130 E 15 K	01/1994 → 07/2000





063522310110 MSN2045 4,0kW 24V

IVECO	
EuroCargo-130 E 18	01/1992 → 07/2000
EuroCargo-130 E 18 K	01/1992 → 07/2000
EuroCargo-135 E 18 W	01/1997 → 07/2000
EuroCargo-135 E 18 WR	01/1994 → 12/1996
EuroCargo-150 E 15	01/1992 → 12/1996
EuroCargo-150 E 15 K	01/1992 → 12/1996
EuroCargo-150 E 18	01/1992 → 07/2000
EuroCargo-150 E 18 K	01/1992 → 07/2000
EuroCargo-170 E 18 K, 180 E 18 K	01/1994 → 07/2000
EuroCargo-170 E 18, 180 E 18	01/1994 → 07/2000
EuroCargo-75 E 15, 80 E 15	01/1991 → 12/1992
EuroCargo-80 E 15	01/1991 → 08/2000
EuroCargo-80 E 15 K	01/1991 → 08/2000
EuroCargo-80 E 18	01/1991 → 08/2000
EuroCargo-80 E 18 K	01/1991 → 08/2000
EuroCargo-95 E 15 W	11/1993 → 12/1994
M-145-17	02/1986 → 12/1991
M-175-17	09/1986 → 07/1992

063522310160 MSN2008 4,0kW 24V

IVECO	
EuroCargo-100 E 17 K tector, 100 E 17 DK tector	09/2000 → 08/2003
EuroCargo-100 E 17, 100 E 17 DP tector, 100 E 18 tector	09/2000 → 08/2003
EuroCargo-100 E 18 K tector, 100 E 18 DK tector	09/2000 → 08/2003
EuroCargo-100 E 18 tector	09/2000 → 08/2003
EuroCargo-100 E 18 W tector, 100 E 18 WS tector	09/2000 → 08/2003
EuroCargo-100 E 21 K tector, 100 E 21 DK tector	09/2000 → 08/2003
EuroCargo-100 E 21 W tector, 100 E 21 WS tector	09/2000 → 08/2003
EuroCargo-100 E 21, 100 E 21 DP tector, 100 E 22 tector	09/2000 → 08/2003
EuroCargo-120 E 18 K tector, 120 E 18 DK tector	09/2000 → 08/2005
EuroCargo-120 E 18 tector, 120 E 18 D tector, 120 E 18 DP tector	09/2000 → 08/2005
EuroCargo-120 E 21 K tector	09/2003 → 08/2005
EuroCargo-120 E 21 tector, 120 E 21 P tector, 120 E 21 FP tector	09/2003 → 08/2005
EuroCargo-120 E 24 K tector, 120 E 24 DK tector	09/2000 → 08/2005





063522310160 MSN2008 4,0kW 24V

IVECO	
EuroCargo-120 E 24, 120 E 24 DP tector, 120 E 25 tector	09/2000 → 08/2005
EuroCargo-120 E 28 tector	09/2000 → 08/2005
EuroCargo-120 E28 K tector	09/2000 → 08/2005
EuroCargo-120 EL 17, 120 EL 17 P tector, 120 E 18, 120 EL 18 tector	08/2005 →
EuroCargo-120 EL 21, 120 EL 21 P tector, 120 E 22, 120 EL 22 tector	09/2000 → 08/2003
EuroCargo-130 E 18 K tector, 130 E 18 DK tector	09/2000 → 08/2005
EuroCargo-130 E 18 tector, 130 E 18 D tector, 130 E 18 DP tector	09/2000 → 08/2005
EuroCargo-130 E 21 K tector	09/2003 → 08/2005
EuroCargo-130 E 21 tector, 130 E21 P tector, 130 E 21 FP tector	09/2003 → 08/2005
EuroCargo-130 E 24 K tector, 130 E 24 DK tector	09/2000 → 08/2005
EuroCargo-130 E 24 tector, 130 E 24 D tector, 130 E 24 DP tector	09/2000 → 08/2005
EuroCargo-130 E 28 K tector	09/2000 → 08/2005
EuroCargo-130 E 28 tector	09/2000 → 08/2005
EuroCargo-140 E 18 K	05/2005 → 08/2005
EuroCargo-140 E 18 W tector	09/2000 → 09/2005
EuroCargo-140 E 18, 140 E 18 P, 140 E 18 FP	05/2005 → 08/2005
EuroCargo-140 E 21 K	05/2005 → 08/2005
EuroCargo-140 E 21 tector, 140 E 21 P, 140 E 21 FP	03/2005 → 08/2005
EuroCargo-140 E 24 K tector	09/2003 → 08/2005
EuroCargo-140 E 24 tector, 14 E 24 P tector, 140 E 24 FP tector	09/2003 → 08/2005
EuroCargo-140 E 24 W tector, 140 E 24 WS tector	09/2000 → 08/2005
EuroCargo-150 E 18 K tector	09/2000 → 08/2005
EuroCargo-150 E 18 tector	09/2000 → 08/2005
EuroCargo-150 E 21 K tector	09/2003 → 08/2005
EuroCargo-150 E 21 tector, 150 E 21 P tector, 150 E 21 FP tector	09/2003 → 08/2005
EuroCargo-150 E 24 K tector	08/2005 →
EuroCargo-150 E 24 tector, 150 E 25 tector	09/2000 → 08/2005
EuroCargo-150 E 28 K tector	08/2005 →
EuroCargo-150 E 28 tector	09/2000 → 08/2005
EuroCargo-160 E 21 tector, 160 E 21 P tector	09/2003 → 08/2005
EuroCargo-160 E 24 tector, 160 E 24 P tector	09/2003 → 08/2005

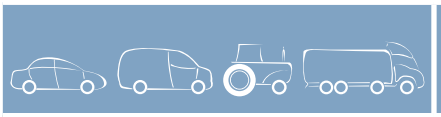


063522310160 MSN2008 4,0kW 24V

IVECO	
EuroCargo-160 E 28 tector, 160 E 28 P tector	09/2003 → 08/2005
EuroCargo-180 E 21 K tector	08/2005 →
EuroCargo-180 E 21 tector	08/2005 →
EuroCargo-180 E 24 K tector	08/2005 →
EuroCargo-180 E 24, 180 E 25 tector	08/2005 →
EuroCargo-180 E 28 K tector	08/2005 →
EuroCargo-180 E 28 tector, 180 E 28 P tector	08/2005 →
EuroCargo-320 E 28 T tector	09/2000 → 08/2003
EuroCargo-320 E 28 tector	09/2000 → 08/2003
EuroCargo-65 E 13 K tector	09/2000 → 08/2005
EuroCargo-65 E 15 tector, 65 E 15 P tector	09/2000 → 08/2003
EuroCargo-65 E15	09/2000 → 08/2003
EuroCargo-75 E 13 K tector	09/2003 → 08/2005
EuroCargo-75 E 13 tector, 75 E 13 P tector	09/2000 → 08/2003
EuroCargo-75 E 15 K tector	09/2000 → 08/2003
EuroCargo-75 E 15 tector, 75 E 15 P tector	09/2000 → 08/2003
EuroCargo-75 E 17 K, 75 E 18 K tector	09/2000 → 08/2003
EuroCargo-75 E 17, 75 E 17 P, 75 E 18 tector	09/2000 → 08/2003
EuroCargo-75 E 18 K tector	09/2000 → 08/2005
EuroCargo-75 E 18 tector, 75 E 18 P tector	09/2000 → 08/2005
EuroCargo-80 E 17 K, 80 E 17 DK tector, 80 E 18 K tector	09/2000 → 08/2003
EuroCargo-80 E 17, 80 E 17 D tector, 80 E 17 DP tector, 80 E 18 tector	09/2000 → 08/2003
EuroCargo-80 E 18 K tector, 80 E 18 DK tector	09/2000 → 08/2003
EuroCargo-80 E 18 tector, 80 E 18 D tector, 80 E 18 DP tector	09/2000 → 08/2003
EuroCargo-80 E 21 K, 80 E 21 DK tector, 80 E 22 K tector	09/2000 → 08/2005
EuroCargo-80 E 21, 80 E 21 D tector, 80 E 21 DP tector, 80 E 22 tector	09/2000 → 08/2005
EuroCargo-80 EL 15 tector	09/2000 → 08/2003
EuroCargo-80 EL 17 tector, 80 EL 17 P tector	09/2003 → 08/2005
EuroCargo-90 E 17 K tector, 90 E 17 DK tector	09/2000 → 09/2005
EuroCargo-90 E 17, 90 E 17D tector, 90 E 17 DP tector, 90 E 18 tector	09/2000 → 09/2005
EuroCargo-90 E 18 K tector, 90 E 18 DK tector	09/2000 → 09/2005
EuroCargo-90 E 18 tector, 90 E 18 D tector, 90 E 18 DP tector	09/2000 → 09/2005
EuroCargo-90 E 21 K tector, 90 E 21 DK tector	09/2000 → 08/2003

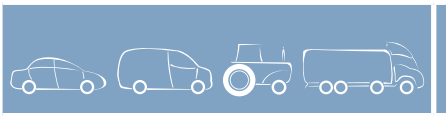


063522310160 MSN2008 4,0kW 24V

IVECO	
EuroCargo-90 E 21, 90 E 21 D tector, 90 E 21 DP tector, 90 E 22 tector	09/2000 → 08/2005
EuroCargo-tector 65 E 13	09/2000 → 08/2003

063522310180 MSN2046 4,0kW 24V

DEUTZ	
1011 D 2011 L4W-Tutte	→
BFM 2011-Tutte	→
TCD 2011 L4-Tutte	→
TCD 3.6 L4-Tutte	→
TD 2011 L4W-Tutte	→
TD 3.6 L4-Tutte	→

063522310290 MSN2048 4,0kW 24V

MAN	
EM-EM 192	10/1993 → 06/1997
EM-EM 222,EM 223	02/1996 → 06/2001
EM-EM 223	02/1996 → 06/2001
G-6.90 F	10/1979 → 09/1987
G-6.90 FK	10/1979 → 09/1987
G-8.90 F	10/1979 → 09/1987
G-8.90 FK	10/1979 → 09/1987
G 90-10.150 F,10.150 FL	09/1987 → 10/1993
G 90-10.150 FK	05/1988 → 10/1993
G 90-8.150 F,8.150 FL	09/1987 → 10/1993
G 90-8.150 FAE	05/1988 → 05/1995
G 90-8.150 FAKO	10/1992 → 05/1995
G 90-8.150 FK	09/1987 → 10/1993
G 90-8.150 FOC	07/1988 → 10/1993
G 90-8.150 FS,8.150 FLS	09/1987 → 10/1993
G 90-9.150 F,9.150 FL	05/1988 → 10/1993
G 90-9.150 FAE	05/1988 → 05/1992
G 90-9.150 FAKO	10/1992 → 05/1995
G 90-9.150 FK	05/1988 → 10/1993
G 90-9.150 FOC	07/1988 → 10/1993
G 90-9.150 FS,9.150 FLS	09/1987 → 10/1993
L 2000-10.145 LC,10.145 LLC, LRC, LLRC (LE140C)	07/2001 → 06/2002
L 2000-10.145 LK, LRK, L-KI, LR-KI (LE140C)	07/2001 → 06/2002
L 2000-10.145 LLS, LLRS (LE140C)	07/2001 → 06/2002
L 2000-10.150 FOC	02/1995 → 01/1996
L 2000-10.153 LAEK	01/1995 → 06/1996
L 2000-10.153 LC,10.153 LLC	10/1993 → 06/1996
L 2000-10.153 LK	10/1993 → 06/1996
L 2000-10.153 LLS	10/1993 → 06/1996





063522310290 MSN2048 4,0kW 24V

MAN	
L 2000-10.163 LAC, LAEC, LARC, LAERC	01/1995 → 09/2006
L 2000-10.163 LAK, LAEK, LARK, LAERK	01/1995 → 09/2006
L 2000-10.163 LC,10.163 LLC	05/1994 → 07/2001
L 2000-10.163 LC,10.163 LLC, LRC, LLRC (LE160C)	09/2000 → 02/2005
L 2000-10.163 LK, LRK, L-KI, LR-KI	05/1994 → 07/2001
L 2000-10.163 LLS, LLRS	05/1994 → 01/2001
L 2000-10.185 LAC, LAEC, LARC, LAERC, LA-LA, LAE-LF (LE180C)	07/2001 → 08/2002
L 2000-10.185 LAK, LAEK, LARK, LAERK (LE180C)	07/2001 → 08/2002
L 2000-10.185 LC,10.185 LLC, LRC, LLRC (LE180C)	09/2000 → 08/2002
L 2000-10.185 LK, LRK, L-KI, LR-KI (LE180C)	09/2000 → 08/2002
L 2000-10.185 LLS, LLRS (LE180C)	09/2000 → 08/2002
L 2000-10.220 FOC,10.220 FOCL	02/1995 → 09/2001
L 2000-10.223 LAEC	01/1995 → 06/1996
L 2000-10.223 LC,10.223 LLC	05/1994 → 06/1996
L 2000-10.223 LK	05/1994 → 06/1996
L 2000-10.223 LLS	05/1994 → 06/1996
L 2000-10.224 LAC, LAEC, LARC, LAERC	01/1995 → 09/2001
L 2000-10.224 LAK, LAEK, LARK, LAERK	01/1995 → 09/2001
L 2000-10.224 LC,10.224 LLC, LRC, LLRC	05/1994 → 09/2001
L 2000-10.224 LK, LRK, L-KI, LR-KI	05/1994 → 09/2001
L 2000-10.224 LLS, LLRS	05/1994 → 09/2001
L 2000-10.225 LAC, LAEC, LARC, LAERC, LA-LF, LAE-LF (LE220C)	09/2000 → 08/2002
L 2000-10.225 LAK, LAEK, LARK, LAERK (LE220C)	07/2001 → 08/2002
L 2000-10.225 LC, 10.225 LLC, LRC, LLRC	07/2001 → 12/2006
L 2000-10.225 LC, 10.225 LLC, LRC, LLRC (LE220C)	07/2001 → 08/2002
L 2000-10.225 LK, LRK , L-KI, LR-KI(LE220C)	07/2001 → 08/2002
L 2000-10.225 LLS, LLRS (LE220C)	07/2001 → 08/2002
L 2000-12.185 LC, LLC	07/2001 → 12/2005
L 2000-12.225 LC, LLC (LE220C)	07/2001 → 06/2006
L 2000-8.103 LC, 8.103 LLC	10/1993 → 06/1996
L 2000-8.103 LK	10/1993 → 06/1996
L 2000-8.113 LC, 8.113 LLC	08/1995 → 09/2001
L 2000-8.113 LK, LRK, L-KI, LR-KI	08/1995 → 09/2001
L 2000-8.145 LC,8.145 LLC, L-LF (LE140C)	07/2001 → 08/2002
L 2000-8.145 LLS, LLRS (LE140C)	09/2002 → 08/2004





063522310290 MSN2048 4,0kW 24V

MAN	
L 2000-8.150 FOC,8.150 FOCL	02/1995 → 07/1998
L 2000-8.153 LAEC	01/1995 → 06/1996
L 2000-8.153 LAEK	01/1995 → 06/1996
L 2000-8.153 LC,8.153 LLC	10/1993 → 07/1997
L 2000-8.153 LK	10/1993 → 07/1997
L 2000-8.153 LLS	01/1995 → 06/1996
L 2000-8.163 LAC, LAEC, LARC, LAERC, LA-LF, LAE-LF	01/1995 → 02/2002
L 2000-8.163 LAEC	08/1995 → 03/1997
L 2000-8.163 LC,8.163 LLC	09/2000 → 09/2001
L 2000-8.163 LC,8.163 LLC	05/1994 → 09/2001
L 2000-8.163 LC,8.163 LLC, LRC, LLRC, L-LF	08/1995 → 03/2001
L 2000-8.163 LK, LRK, L-KI, LR-KI	08/1995 → 09/2001
L 2000-8.163 LLS, LLRS	05/1994 →
L 2000-8.185 LAC, LAEC, LARC, LAERC, LA-LF, LAE-LF (LE180C)	07/2001 → 08/2002
L 2000-8.185 LAK, LAEK, LARK, LAERK (LE180C)	09/2000 → 08/2002
L 2000-8.185 LC,8.185 LLC, LRC, LLRC, L-LF (LE180C)	09/2000 → 08/2002
L 2000-8.185 LK, LRK, L-KI, LR-KI (LE180C)	09/2002 → 12/2005
L 2000-8.185 LLS, LLRS (LE180C)	07/2001 → 08/2002
L 2000-8.220 FOC,8.220 FOCL	04/1995 → 09/2001
L 2000-8.223 LAEC	01/1995 → 06/1996
L 2000-8.223 LC,8.223 LLC	05/1994 → 06/1996
L 2000-8.223 LK	05/1994 → 01/1995
L 2000-8.223 LLS	05/1994 → 01/1995
L 2000-8.224 LAC, LAEC, LARC, LAERC	01/1995 → 08/2001
L 2000-8.224 LAK, LAEK, LARK, LAERK	01/1995 → 08/2001
L 2000-8.224 LC,8.224 LLC, LRC, LLRC	05/1994 → 01/1995
L 2000-8.224 LK, LRK, L-KI, LR-KI	01/1995 → 09/2001
L 2000-8.224 LLS, LLRS	01/1995 → 03/2001
L 2000-8.225 LAC, LAEC, LARC, LAERC (LE220C)	07/2001 → 08/2002
L 2000-8.225 LAK, LAEK, LARK, LAERK (LE220C)	07/2001 → 08/2002
L 2000-8.225 LC,8.225 LLC, LRC, LLRC (LE220C)	07/2001 → 08/2002
L 2000-8.225 LK, LRK, L-KI, LR-KI (LE220C)	07/2001 → 08/2002
L 2000-8.225 LLS, LLRS (LE220C)	07/2001 → 08/2002
L 2000-9.145 LC,9.145 LLC, LRC, LLRC (LE140C)	07/2001 → 08/2002
L 2000-9.145 LK, LRK, L-KI, LR-KI (LE140C)	07/2001 → 08/2002





063522310290 MSN2048 4,0kW 24V

MAN	
L 2000-9.145 LLS, LLRS (LE140C)	07/2001 → 08/2002
L 2000-9.153 LC,9.153 LLC	10/1993 → 06/1996
L 2000-9.153 LK	08/1995 → 06/1996
L 2000-9.153 LLS	01/1995 → 12/1995
L 2000-9.163 LC	08/1995 → 03/1997
L 2000-9.163 LC,9.163 LLC, LRC, LLRC	05/1994 → 09/2001
L 2000-9.163 LK	08/1995 → 03/1997
L 2000-9.163 LK, LRK, L-KI, LR-KI	05/1994 →
L 2000-9.163 LLS, LLRS	05/1994 → 03/2001
L 2000-9.185 LC,9.185 LLC, LRC, LLRC (LE180C)	09/2000 → 06/2005
L 2000-9.185 LK, LRK, L-KI, LR-KI (LE180C)	07/2001 → 06/2005
L 2000-9.185 LLS, LLRS (LE 180C)	07/2001 → 06/2005
L 2000-9.223 LC,9.223 LLC	05/1994 → 06/1996
L 2000-9.223 LK	05/1994 → 06/1996
L 2000-9.223 LLS	05/1994 → 06/1996
L 2000-9.224 LC,9.224 LLC, LRC, LLRC	05/1994 → 09/2001
L 2000-9.224 LK, LRK, L-KI, LR-KI	05/1994 → 09/2001
L 2000-9.224 LLS, LLRS	05/1994 → 03/2001
L 2000-9.225 LC,9.225 LLC, LRC, LLRC (LE220C)	07/2001 → 06/2005
L 2000-9.225 LK, LRK, L-KI, LR-KI (LE220C)	07/2001 → 06/2005
L 2000-9.225 LLS, LLRS (LE220C)	07/2001 → 06/2005
M 2000 L-12.163 LC, LLC, LRC, LLRC	08/1995 → 08/2001
M 2000 L-12.163 LK, LRK	08/1995 → 08/2001
M 2000 L-12.224 LC, LLC, LRC, LLRC	08/1995 → 09/2001
M 2000 L-12.224, 12.225, LK, LRK	08/1995 → 08/2001
M 2000 L-12.225 LC, LLC, LLLC, LRC, LLRC	07/2001 → 06/2006
M 2000 L-12.255 LC, LLC, LLLC	09/2002 → 06/2006
M 2000 L-12.255 LK	10/2003 → 06/2006
M 2000 L-12.285 LC, LLC, LLLC	09/2002 → 06/2006
M 2000 L-12.285 LK	10/2003 → 06/2006
M 2000 L-14.163 LC, LLC, LRC, LLRC	08/1995 → 08/2001
M 2000 L-14.163 LK, LRK	08/1995 → 08/2001
M 2000 L-14.224 LAC, LARC	08/1995 → 09/2001
M 2000 L-14.224 LAK, LARK	08/1995 → 09/2001
M 2000 L-14.224 LC, LLC, LLLC, LRC, LLRC, LLLRC	08/1995 → 09/2001
M 2000 L-14.224 LK, LRK	08/1995 → 09/2001
M 2000 L-14.224, 14.225, LA-LF	07/2003 → 09/2006
M 2000 L-14.225 LAC, LARC, (LE220B)	07/2001 → 08/2002
M 2000 L-14.225 LAK, LARK, (LE220B)	09/2002 → 09/2006
M 2000 L-14.225 LC, LLC, LLLC, LRC, LLRC, LLLRC, (LE220B)	09/2000 → 08/2002

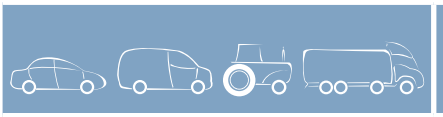



063522310290 MSN2048 4,0kW 24V

MAN	
M 2000 L-14.225 LK, LRK (LE220B)	09/2002 → 06/2006
M 2000 L-14.255 LAC, LARC	11/2002 → 09/2006
M 2000 L-14.255 LAK, LARK	11/2002 → 09/2006
M 2000 L-14.255 LA-LF	07/2003 → 09/2006
M 2000 L-14.255 LC, LLC, LLLC, LRC, LLRC, LLLRC, (LE250B)	07/2001 → 09/2006
M 2000 L-14.255 LK, LRK	11/2002 → 09/2006
M 2000 L-14.263, 14.264 LAC, LARC	08/1995 → 09/2001
M 2000 L-14.263, 14.264 LAK, LARK	08/1995 → 09/2001
M 2000 L-14.263, 14.264 LC, LLC, LLLC, LRC, LLRC, LLLRC	08/1995 → 09/2001
M 2000 L-14.263, 14.264 LK, LRK	08/1995 → 09/2001
M 2000 L-14.284 LC, LLC, LLLC, LRC, LLRC, LLLRC	10/1998 → 09/2001
M 2000 L-14.284, 14.285, LAC, LARC	06/1998 → 09/2001
M 2000 L-14.284, 14.285, LAK, LARK	06/1998 → 09/2001
M 2000 L-14.284, 14.285, LA-LF	06/1998 → 09/2001
M 2000 L-14.284, 14.285, LK, LRK	10/1998 → 09/2001
M 2000 L-14.285 LC, LLC, LLLC, LRC, LLRC, LLLRC, (LE280B)	09/2000 → 06/2006
M 2000 L-15.163 LC, LLC, LRC	08/1995 → 09/2001
M 2000 L-15.163 LK, LRK	08/1995 → 09/2001
M 2000 L-15.224 LC, LLC, LLLC, LRC, LLRC, LLLRC	08/1995 → 09/2001
M 2000 L-15.224 LK, LRK	08/1995 → 09/2001
M 2000 L-15.225 LC, LLC, LLLC, LRC, LLRC, LLLRC, (LE220B)	07/2001 → 08/2002
M 2000 L-15.225 LK, LRK, (LE220B)	09/2000 → 08/2002
M 2000 L-15.255 LC, LLC, LLLC, LRC, LLRC, LLLRC, (LE250B)	07/2001 → 08/2002
M 2000 L-15.255 LK, LRK, (LE250B)	07/2001 → 08/2002
M 2000 L-15.263, 15.264 LC, LLC, LLLC, LRC, LLRC, LLLRC	08/1995 → 09/2001
M 2000 L-15.263, 15.264 LK, LRK	08/1995 → 09/2001
M 2000 L-15.284 LC, LLC, LLLC, LRC, LLRC, LLLRC	06/1998 → 09/2001
M 2000 L-15.284 LK, LRK	06/1998 → 09/2001
M 2000 L-15.285 LC, LLC, LLLC, LRC, LLRC, LLLRC, (LE280B)	09/2000 → 09/2001
M 2000 L-15.285 LK, LRK, (LE280B)	09/2000 → 09/2002
M 2000 L-18.224, 18.225, LAC, LARC	08/1995 → 09/2001
M 2000 L-18.224, 18.225, LAK, LARK	08/1995 → 09/2001
M 2000 L-18.224, 18.225, LC, LLC, LLLC, LRC, LLRC, LLLRC	08/1995 → 09/2001





063522310290 MSN2048 4,0kW 24V

MAN	
M 2000 L-18.224, 18.225, LK, LLK, LRK, LLRK	08/1995 → 09/2001
M 2000 L-18.224, 18.225, L-KO, LR-KO	05/2001 → 09/2006
M 2000 L-18.255 LAC, LARC	07/2001 → 09/2006
M 2000 L-18.255 LAK, LARK	07/2001 → 09/2006
M 2000 L-18.255 LC, LLC, LLLC, LRC, LLRC, LLLRC, (LE250B)	09/2002 → 09/2006
M 2000 L-18.255 LK, LLK, LRK, LLRK	11/2002 → 09/2006
M 2000 L-18.255 L-KO, LR-KO	07/2001 → 09/2006
M 2000 L-18.263, 18.264, LAC, LARC	08/1995 → 09/2001
M 2000 L-18.263, 18.264, LAK, LARK	08/1995 → 09/2001
M 2000 L-18.263, 18.264, LC, LLC, LLLC, LRC, LLRC, LLLRC	08/1995 → 09/2001
M 2000 L-18.263, 18.264, LK, LLK, LRK, LLRK	08/1995 → 09/2001
M 2000 L-18.284 LAC, LARC	06/1998 → 09/2001
M 2000 L-18.284 LAK, LARK	06/1998 → 09/2001
M 2000 L-18.284 LC, LLC, LLLC, LRC, LLRC, LLLRC	06/1998 → 09/2001
M 2000 L-18.284, 18.285, LK, LLK, LRK, LLRK	06/1998 → 09/2001
M 2000 L-18.284, 18.285, L-KO, LR-KO	06/1998 → 09/2001
M 2000 L-18.285 LAC, LARC (LE280B)	07/2001 → 08/2002
M 2000 L-18.285 LAK, LARK, (LE280B)	07/2001 → 08/2002
M 2000 L-18.285 LC, LLC, LLLC, LRC, LLRC, LLLRC, (LE280B)	09/2002 → 09/2006
M 2000 L-20.224 LNLC, LNLLC	05/2001 → 09/2006
M 2000 L-20.255 LNLC, LNLLC	07/2001 → 09/2006
M 2000 L-20.284, 20.285, LNLC, LNLLC	05/2001 → 09/2006
M 2000 L-26.284 DL-TM, DLR-TM	05/2001 → 12/2002
M 2000 L-26.284, 26.285, DL-HK, DLR-HK	11/2002 → 12/2002
M 2000 M-12.224 MLS	02/2003 → 07/2005
M 2000 M-12.255 MLS	02/2003 → 07/2005
M 2000 M-12.284 MLS	09/2002 → 07/2005
M 2000 M-14.224 MAK	08/1995 → 09/2001
M 2000 M-14.224 MC, MLC, MLLC	08/1995 → 09/2001
M 2000 M-14.224 MK	08/1995 → 09/2001
M 2000 M-14.224 MLS, MLRS	08/1995 → 09/2001
M 2000 M-14.225 MC, MLC, MLLC	10/2000 → 07/2005
M 2000 M-14.225 MLS, MLRS	02/2003 → 07/2005
M 2000 M-14.255 MAK	11/2002 → 07/2005
M 2000 M-14.255 MC, MLC, MLLC	09/2002 → 07/2005
M 2000 M-14.255 MLS, MLRS	01/2001 → 09/2006
M 2000 M-14.264 MC, MLC, MLLC	08/1995 → 09/2001





063522310290 MSN2048 4,0kW 24V

MAN	
M 2000 M-14.264 MLS, MLRS	08/1995 → 09/2001
M 2000 M-14.284 MAK	06/1998 → 09/2001
M 2000 M-14.284 MA-KO, MA-LF	06/1998 → 09/2001
M 2000 M-14.284 MC, MLC, MLLC	06/1998 → 09/2001
M 2000 M-14.284 MLS, MLRS	06/1998 → 09/2001
M 2000 M-14.285 MLC, MLLC (ME280C)	07/2001 → 08/2002
M 2000 M-18.224 MAC, MARC	08/1995 → 09/2001
M 2000 M-18.224 MAK, MARK	08/1995 → 09/2001
M 2000 M-18.224 MC, MLC, MLLC, MRC, MLRC, MLLRC	08/1995 → 09/2001
M 2000 M-18.224 MK,18.224 MLK, MRK, MLRK	08/1995 → 09/2001
M 2000 M-18.224 MLS, MLRS	08/1995 → 09/2001
M 2000 M-18.225 MAC, MARC	02/2003 → 07/2005
M 2000 M-18.225 MC, MLC, MLLC, MRC, MLRC, MLLRC	10/2000 → 07/2005
M 2000 M-18.255 MAK, MARK	07/2001 → 02/2005
M 2000 M-18.255 MK, MLK, MRK, MLRK	11/2002 → 02/2005
M 2000 M-18.255 MLS, MLRS	01/2001 → 09/2006
M 2000 M-18.264 MAC, MARC	08/1995 → 09/2001
M 2000 M-18.264 MAK, MARK	08/1995 → 09/2001
M 2000 M-18.264 MC, MLC, MLLC, MRC, MLRC, MLLRC	08/1995 → 09/2001
M 2000 M-18.264 MK,18.264 MLK, MRK, MLRK	08/1995 → 09/2001
M 2000 M-18.264 MLS, MLRS	08/1995 → 09/2001
M 2000 M-18.284 MAC, MARC	06/1998 → 09/2001
M 2000 M-18.284 MAK, MARK	06/1998 → 09/2001
M 2000 M-18.284 MC, MLC, MLLC, MRC, MLRC, LLRC	06/1998 → 09/2001
M 2000 M-18.284 MK,18.284 MLK, MRK, MLRK	06/1998 → 09/2001
M 2000 M-18.284 MLS, MLRS	06/1998 → 09/2001
M 2000 M-25.224 MNLC, MNLLC, MNLRC, MNLLRC, MVLC	08/1995 → 09/2001
M 2000 M-25.264 MNLC, MNLLC, MNLRC, MNLLRC, MVLC	08/1995 → 09/2001
M 2000 M-25.285 MNLC, MNLLC, MNLRC, MNLLRC, MVLC	02/2003 → 07/2005
M 90-12.192 F,12.192 FL	07/1990 → 06/1996
M 90-12.192 FA	10/1992 → 06/1996
M 90-12.192 FAK	10/1992 → 06/1996
M 90-12.192 FK	07/1990 → 06/1996
M 90-12.192 FS,12.192 FLS	07/1990 → 06/1996

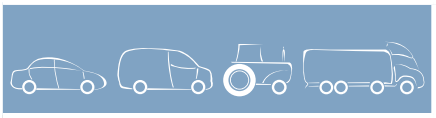


063522310290 MSN2048 4,0kW 24V

MAN	
M 90-12.222 F,12.222 FL	05/1994 → 06/1996
M 90-12.222 FA	05/1994 → 06/1996
M 90-12.222 FAK	05/1994 → 06/1996
M 90-12.222 FK	05/1994 → 06/1996
M 90-12.222 FLS	05/1994 → 06/1996
M 90-12.232 F,12.232 FL	08/1988 → 06/1996
M 90-12.232 FA	05/1990 → 06/1996
M 90-12.232 FAK	05/1990 → 06/1996
M 90-12.232 FK	08/1988 → 06/1996
M 90-12.232 FS,12.232 FLS	08/1988 → 06/1996
M 90-12.262 F,12.262 FL	08/1995 → 06/1996
M 90-12.262 FK	08/1995 → 06/1996
M 90-12.262 FS,12.262 FLS	08/1995 → 06/1996
M 90-12.272 F,12.272 FL	10/1992 → 06/1996
M 90-12.272 FA	10/1993 → 04/1995
M 90-12.272 FAK	10/1993 → 04/1995
M 90-12.272 FK	10/1992 → 06/1996
M 90-12.272 FS,12.272 FLS	10/1992 → 06/1996
M 90-14.152 F,14.152 FL	05/1994 → 06/1996
M 90-14.152 FK	05/1994 → 06/1996
M 90-14.152 FS,14.152 FLS	05/1994 → 06/1996
M 90-14.162 F,14.162 FL	08/1995 → 06/1996
M 90-14.162 FK	08/1995 → 06/1996
M 90-14.162 FS,14.162 FLS	08/1995 → 06/1996
M 90-14.192 F,14.192 FL	08/1988 → 06/1990
M 90-14.192 F,14.192 FL	07/1990 → 06/1996
M 90-14.192 FK	07/1990 → 06/1996
M 90-14.192 FK	08/1988 → 06/1990
M 90-14.192 FS,14.192 FLS	08/1988 → 06/1990
M 90-14.192 FS,14.192 FLS	07/1990 → 06/1996
M 90-14.222 F,14.222 FL	05/1994 → 06/1996
M 90-14.222 FK	05/1994 → 06/1996
M 90-14.222 FLS	05/1994 → 06/1996
M 90-14.232 F,14.232 FL	08/1988 → 06/1996
M 90-14.232 FK	08/1988 → 06/1996
M 90-14.232 FS,14.232 FLS	08/1988 → 06/1996
M 90-14.262 F,14.262 FL	08/1995 → 06/1996
M 90-14.262 FK	08/1995 → 06/1996
M 90-14.262 FS,14.262 FLS	08/1995 → 06/1996
M 90-14.272 F,14.272 FL	10/1992 → 06/1996
M 90-14.272 FK	10/1992 → 06/1996
M 90-14.272 FS,14.272 FLS	12/1992 → 06/1996
M 90-17.192 F,17.192 FL	08/1988 → 06/1990
M 90-17.192 F,17.192 FL	07/1990 → 04/1995

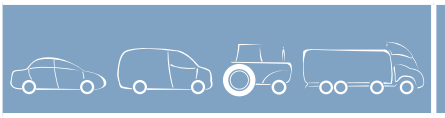


063522310290 MSN2048 4,0kW 24V

MAN	
M 90-17.192 FA	07/1990 → 06/1996
M 90-17.192 FA	02/1989 → 06/1990
M 90-17.192 FAK	02/1989 → 06/1990
M 90-17.192 FAK	07/1990 → 06/1996
M 90-17.192 FK	08/1988 → 06/1990
M 90-17.192 FK	07/1990 → 01/1991
M 90-17.192 FS,17.192 FLS	07/1990 → 04/1995
M 90-17.192 FS,17.192 FLS	08/1988 → 06/1990
M 90-17.222 FA	05/1994 → 06/1996
M 90-17.222 FAK	05/1994 → 06/1996
M 90-17.232 F,17.232 FL	08/1988 → 04/1995
M 90-17.232 FA	02/1989 → 06/1996
M 90-17.232 FAK	02/1989 → 06/1996
M 90-17.232 FK	08/1988 → 01/1991
M 90-17.232 FS,17.232 FLS	08/1988 → 04/1995
M 90-17.272 FLS	10/1992 → 05/1995
M 90-18.192 F,18.192 FL,18.192 FLL	09/1990 → 06/1996
M 90-18.192 FK	09/1990 → 06/1996
M 90-18.222 F,18.222 FL,18.222 FLL	05/1994 → 06/1996
M 90-18.222 FK	05/1994 → 06/1996
M 90-18.232 F,18.232 FL,18.232 FLL	09/1990 → 06/1996
M 90-18.232 FK	09/1990 → 06/1996
M 90-18.262 F,18.262 FL,18.262 FLL	08/1995 → 06/1996
M 90-18.262 FK	08/1995 → 06/1996
M 90-18.272 F,18.272 FL,18.272 FLL	10/1992 → 06/1996
M 90-18.272 FK	10/1992 → 06/1996
M 90-24.192 FNL,24.192 FNLL,24.192 FVL	07/1989 → 06/1996
M 90-24.222 FNL,24.222 FNLL,24.222 FVL	05/1994 → 06/1996
M 90-24.232 FNL,24.232 FNLL,24.232 FVL	07/1989 → 06/1996
M 90-24.262 FNL,24.262 FNLL,24.262 FVL	08/1995 → 06/1996
M 90-24.272 FNL,24.272 FNLL,24.272 FVL	10/1992 → 06/1996
NG-NG 262, NG 272	08/1992 → 09/1995
NM-223	07/1998 → 06/2001
NM-NM 152	05/1990 → 05/1996
NM-NM 182, NM 192	05/1990 → 03/1997
NM-NM 222, NM 223	02/1996 → 06/2001
SM-SM 152	11/1987 → 04/1994
SM-SM 182,SM 192	11/1987 → 02/1995
SU-SU 283	06/2004 → 09/2006

063522310330 MSN2049 4,0kW 24V

MERCEDES-BENZ	
ATEGO-712	01/1998 → 10/2004
ATEGO-812	01/1998 → 10/2004
ATEGO-1017 A	01/1998 → 10/2004




063522310330 MSN2049 4,0kW 24V

MERCEDES-BENZ	
ATEGO-1017 AK	01/1998 → 10/2004
ATEGO-1017 K	01/1998 → 10/2004
ATEGO-1017 KO, 1018 KO	01/1998 → 10/2004
ATEGO-1017, 1017 L	01/1998 → 10/2004
ATEGO-1023 AK	01/1998 → 09/2004
ATEGO-1023, 1023 L	01/1998 → 10/2004
ATEGO-1214 K	01/1998 → 09/2004
ATEGO-1214, 1214 L	01/1998 → 10/2004
ATEGO-1215 K	01/1998 → 10/2004
ATEGO-1215, 1215 L	01/1998 → 10/2004
ATEGO-1217 K	01/1998 → 10/2004
ATEGO-1217 KO	01/1998 → 10/2004
ATEGO-1217, 1217 L	01/1998 → 10/2004
ATEGO-1223 K	01/1998 → 09/2004
ATEGO-1223, 1223 L	01/1998 → 10/2004
ATEGO-1225 AF	01/1998 → 10/2004
ATEGO-1225 F	01/1998 → 10/2004
ATEGO-1228, 1228 L	01/1998 → 10/2004
ATEGO-1317 A	01/1998 → 10/2004
ATEGO-1317 AK	01/1998 → 10/2004
ATEGO-1317 K	01/1998 → 10/2004
ATEGO-1317 KO, 1317 LKO, 1318 KO, 1318 LKO	01/1998 → 10/2004
ATEGO-1317, 1317 L	01/1998 → 10/2004
ATEGO-1323 AK	01/1998 → 09/2004
ATEGO-1323 K	01/1998 → 09/2004
ATEGO-1323 KO, 1323 LKO	01/1998 → 10/2004
ATEGO-1323 LS	01/1998 → 10/2004
ATEGO-1323, 1323 L	01/1998 → 10/2004
ATEGO-1325 AF	01/1998 → 10/2004
ATEGO-1325 F	01/1998 → 10/2004
ATEGO-1328 AF	01/1998 → 10/2004
ATEGO-1328 F	01/1998 → 10/2004
ATEGO-1328 LS	01/1998 → 10/2004
ATEGO-1328, 1328 L	01/1998 → 10/2004
ATEGO-1517 A	01/1998 → 10/2004
ATEGO-1517 AK	01/1998 → 09/2004
ATEGO-1517 K	01/1998 → 10/2004
ATEGO-1517, 1517 L	01/1998 → 10/2004
ATEGO-1523 A	01/1998 → 10/2004
ATEGO-1523 AK	01/1998 → 10/2004
ATEGO-1523 K	01/1998 → 10/2004
ATEGO-1523 KO	01/1998 → 10/2004
ATEGO-1523, 1523 L	01/1998 → 10/2004




063522310330 MSN2049 4,0kW 24V

MERCEDES-BENZ	
ATEGO-1525 AF	01/1998 → 10/2004
ATEGO-1528 AF	01/1998 → 10/2004
ATEGO-1528 AK	01/1998 → 09/2004
ATEGO-1528 F	01/1998 → 09/2004
ATEGO-1528 K	01/1998 → 09/2004
ATEGO-1528, 1528 L	01/1998 → 10/2004
ATEGO-714 K	01/1998 → 09/2004
ATEGO-714, 714 L	01/1998 → 10/2004
ATEGO-715,715 L	01/1998 → 10/2004
ATEGO-717 K	01/1998 → 09/2004
ATEGO-717, 717 L	01/1998 → 10/2004
ATEGO-814 K	01/1998 → 10/2004
ATEGO-814, 814 L	01/1998 → 10/2004
ATEGO-815 F	01/1998 → 10/2004
ATEGO-815 K	01/1998 → 10/2004
ATEGO-815, 815 L	01/1998 → 09/2004
ATEGO-817 K	01/1998 → 10/2004
ATEGO-817, 817 L	01/1998 → 10/2004
ATEGO-823 K	01/1998 → 09/2004
ATEGO-823, 823 L	01/1998 → 09/2004
ATEGO-917 AF	01/1998 → 10/2004
ATEGO-917 K	01/1998 → 10/2004
ATEGO-917, 917 L	01/1998 → 10/2004
ATEGO-923 K	01/1998 → 10/2004
ATEGO-923, 923 L	01/1998 → 10/2004
ATEGO-925 AF	01/1998 → 10/2004
ATEGO 2-1015 K, 1016 K	02/2006 →
ATEGO 2-1016, 1016 L	02/2006 →
ATEGO 2-1017 K, 1018 K	02/2006 →
ATEGO 2-1018 A	02/2006 →
ATEGO 2-1018 AK	02/2006 →
ATEGO 2-1018, 1018 L	02/2006 →
ATEGO 2-1022 A	06/2006 →
ATEGO 2-1022 AK	06/2006 →
ATEGO 2-1022 K	10/2004 →
ATEGO 2-1022 KO	06/2006 →
ATEGO 2-1022, 1022 L	10/2004 →
ATEGO 2-1023 A, 1024 A	10/2004 →
ATEGO 2-1023, 1023 L, 1024, 1024 L	02/2006 →
ATEGO 2-1024 AK	02/2006 →
ATEGO 2-1024 K	02/2006 →
ATEGO 2-1024, 1024 L	02/2006 →
ATEGO 2-1215, 1215 L, 1216, 1216 L	02/2006 →
ATEGO 2-1216 K	02/2006 →

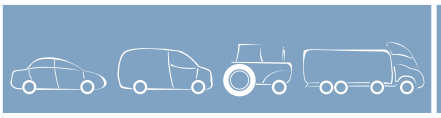



063522310330 MSN2049 4,0kW 24V

MERCEDES-BENZ	
ATEGO 2-1216, 1216 L	02/2006 →
ATEGO 2-1218 K	02/2006 →
ATEGO 2-1218, 1218 L	02/2006 →
ATEGO 2-1222 AF	06/2006 →
ATEGO 2-1222 F	06/2006 →
ATEGO 2-1222 K	10/2004 →
ATEGO 2-1222, 1222 L	10/2004 →
ATEGO 2-1223, 1223 L, 1224, 1224 L	02/2006 →
ATEGO 2-1224 K	02/2006 →
ATEGO 2-1226 AF	02/2006 →
ATEGO 2-1226 F	02/2006 →
ATEGO 2-1226, 1226 L	02/2006 →
ATEGO 2-1228, 1228 L, 1229, 1229 L	10/2004 →
ATEGO 2-1318 A	02/2006 →
ATEGO 2-1318 AK	02/2006 →
ATEGO 2-1318 K	02/2006 →
ATEGO 2-1318, 1318 L	02/2006 →
ATEGO 2-1322 A	06/2006 →
ATEGO 2-1322 AF	06/2006 →
ATEGO 2-1322 AK	06/2006 →
ATEGO 2-1322 F	06/2006 →
ATEGO 2-1322 K	10/2004 →
ATEGO 2-1322 LKO	06/2006 →
ATEGO 2-1322 LS	10/2004 →
ATEGO 2-1322, 1322 L	10/2004 →
ATEGO 2-1323 A, 1324 A	02/2006 →
ATEGO 2-1323 LS, 1324 LS	02/2006 →
ATEGO 2-1323, 1323 L, 1324, 1324 L	02/2006 →
ATEGO 2-1324 AK	02/2006 →
ATEGO 2-1324 K	02/2006 →
ATEGO 2-1324 LKO	02/2006 →
ATEGO 2-1326 AF	02/2006 →
ATEGO 2-1326 F	02/2006 →
ATEGO 2-1326 LS	02/2006 →
ATEGO 2-1326, 1326 L	02/2006 →
ATEGO 2-1328 LS, 1329 LS	10/2004 →
ATEGO 2-1328, 1328 L, 1329, 1329 L	10/2004 →
ATEGO 2-1329 AF	02/2006 →
ATEGO 2-1329 F	02/2006 →
ATEGO 2-1518 A	02/2006 →
ATEGO 2-1518 AK	02/2006 →
ATEGO 2-1518 K	02/2006
ATEGO 2-1518, 1518 L	02/2006
ATEGO 2-1522 A	06/2006

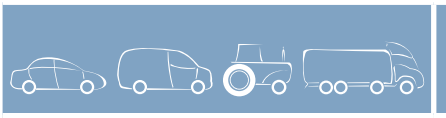



063522310330 MSN2049 4,0kW 24V

MERCEDES-BENZ	
ATEGO 2-1522 AF	06/2006 →
ATEGO 2-1522 AK	06/2006 →
ATEGO 2-1522 F	06/2006 →
ATEGO 2-1522 K	10/2004 →
ATEGO 2-1522, 1522 L	10/2004 →
ATEGO 2-1523 A, 1524 A	02/2006 →
ATEGO 2-1523 K, 1524 K	02/2006 →
ATEGO 2-1523, 1523 L, 1524, 1524 L	02/2006 →
ATEGO 2-1524 AK	02/2006 →
ATEGO 2-1526 AF	02/2006 →
ATEGO 2-1526 AK	02/2006 →
ATEGO 2-1526 K	02/2006 →
ATEGO 2-1526, 1526 L	02/2006 →
ATEGO 2-1528, 1528 L, 1529, 1529 L	10/2004 →
ATEGO 2-1529 AF	02/2006 →
ATEGO 2-1529 AK	02/2006 →
ATEGO 2-1529 F	02/2006 →
ATEGO 2-1529 K	02/2006 →
ATEGO 2-712, 713	02/2006 →
ATEGO 2-715, 715 L, 716, 716 L	02/2006 →
ATEGO 2-812, 813	02/2006 →
ATEGO 2-815 K, 816 K	02/2006 →
ATEGO 2-815, 815 L, 816, 816 L	02/2006 →
ATEGO 2-816, 816 L	02/2006 →
ATEGO 2-818 K	10/2004 →
ATEGO 2-818, 818 L	10/2004 →
ATEGO 2-822 F	06/2006 →
ATEGO 2-822 K	10/2004 →
ATEGO 2-822, 822 L	10/2004 →
ATEGO 2-823, 823 L, 824, 824 L	02/2006 →
ATEGO 2-824 K	02/2006 →
ATEGO 2-915, 915 L, 916, 916 L	02/2006 →
ATEGO 2-916 K	02/2006 →
ATEGO 2-916, 916 L	02/2006 →
ATEGO 2-918 AF	02/2006 →
ATEGO 2-918 K	02/2006 →
ATEGO 2-918, 918 L	02/2006 →
ATEGO 2-922 AF	06/2006 →
ATEGO 2-922 K	10/2004 →
ATEGO 2-922, 922 L	10/2004 →
ATEGO 2-923, 923 L, 924, 924 L	02/2006 →
ATEGO 2-924 K	02/2006 →
ATEGO 2-924, 924 L	02/2006 →
ATEGO 2-926 AF	02/2006 →





063522310330 MSN2049 4,0kW 24V

MERCEDES-BENZ	
ATEGO 2-926, 926 L	02/2006 →
ATEGO II-2628	05/1998 → 09/2004
ATEGO II-1823 AK	05/1998 → 09/2004
ATEGO II-1823 K	05/1998 → 09/2004
ATEGO II-1823 LS	05/1998 → 09/2004
ATEGO II-1823, 1823 L	05/1998 → 10/2004
ATEGO II-1828 A	05/1998 → 09/2004
ATEGO II-1828 AK	05/1998 → 09/2004
ATEGO II-1828 K	05/1998 → 09/2004
ATEGO II-1828 LS	05/1998 → 09/2004
ATEGO II-1828, 1828 L	05/1998 → 09/2004
ATEGO II-2523 L	05/1998 → 09/2004
ATEGO II-2528 L	05/1998 → 09/2004
ATEGO II-2628 B	05/1998 → 09/2004
ATEGO II-2628 K	05/1998 → 09/2004
AXOR-1823	01/2002 → 10/2004
AXOR-2523	01/2002 → 10/2004
AXOR-2528	01/2002 → 10/2004
AXOR-1823 K	01/2002 → 10/2004
AXOR-2523 K	01/2002 → 10/2004
AXOR-2623 L	01/2002 → 10/2004
AXOR-2628 B	01/2002 → 10/2004
AXOR-2628 K	01/2002 → 10/2004
AXOR-2628 L	01/2002 → 10/2004
AXOR-3228 C	01/2002 → 10/2004
AXOR 2-2633	10/2004 → 08/2006
AXOR 2-1823 AK, 1824 AK	09/2006 →
AXOR 2-1823 K, 1823 KL, 1824 K	09/2006 →
AXOR 2-1823 LS, 1824 LS	09/2006 →
AXOR 2-1823, 1823 L, 1824, 1824 L, LL	09/2006 →
AXOR 2-1824 A	09/2006 →
AXOR 2-1826 AK	09/2006 →
AXOR 2-1826 K	09/2006 →
AXOR 2-1826 LS	09/2006 →
AXOR 2-1826, 1826 L, LL	09/2006 →
AXOR 2-1828 A, 1829 A	09/2006 →
AXOR 2-1828 AK, 1829 AK	09/2006 →
AXOR 2-1828 K, 1828 KL, 1829 K	09/2006 →
AXOR 2-1828, 1828 L, 1829, 1829 L, LL	09/2006 →
AXOR 2-1829 LS	09/2006 →
AXOR 2-1833 A	10/2004 → 08/2006
AXOR 2-1833 AK	10/2004 → 08/2006
AXOR 2-1833 K	10/2004 → 08/2006
AXOR 2-1833 LS	10/2004 → 08/2006





063522310330 MSN2049 4,0kW 24V

MERCEDES-BENZ	
AXOR 2-1833, 1833 L, LL	10/2004 → 08/2006
AXOR 2-2528 L, 2529 L	09/2006 →
AXOR 2-2533, 2533 L	10/2004 → 08/2006
AXOR 2-2628 B, 2629 B	09/2006 →
AXOR 2-2628 K, 2629 K	09/2006 →
AXOR 2-2628, 2629	09/2006 →
AXOR 2-2633 B	10/2004 → 08/2006
AXOR 2-2633 K	10/2004 → 08/2006
AXOR 2-3028 B	03/2003 →
AXOR 2-3028 K	03/2003 →
CITARO (O 530)-Citaro	04/1999 → 09/2006
CITARO (O 530)-Citaro G	01/1999 → 09/2004
CITARO (O 530)-Citaro N	01/1999 → 09/2006
CITO (O 520)-177 kW	06/1999 → 09/2003
CONECTO (O 345)-CONECTO C, H, UE	11/2001 → 08/2007
ECONIC-2628	03/1998 → 03/2001
ECONIC-1823 L, 1823 LL	03/1998 → 03/2001
ECONIC-1824 L, 1824 LL	09/2006 →
ECONIC-1828 L, 1828 LL	03/1998 → 03/2001
ECONIC-1828 L, 1828 LL	09/2006 →
ECONIC-1828 LLS	03/2000 → 08/2006
ECONIC-1829 L, 1829 LL	09/2006 →
ECONIC-1833 L, 1833 LL	10/2006 →
ECONIC-2628 LL	03/1998 → 03/2001
ECONIC-2629 L, 2629 LL	09/2006 →
ECONIC-2633 L, 2633 LL	→
ECONIC-2633 LL	03/2000 → 09/2006
ECONIC-3233 L, 3233 LL	09/2006 →
LK/LN2-711	03/1996 → 12/1998
LK/LN2-811	03/1996 → 12/1998
LK/LN2-1117 K	03/1996 → 12/1998
LK/LN2-1117 LO	03/1996 → 12/1998
LK/LN2-1117 S	03/1996 → 12/1998
LK/LN2-1117,1117 L	03/1996 → 12/1998
LK/LN2-1317 K	03/1996 → 12/1998
LK/LN2-1317 KO	03/1996 → 12/1998
LK/LN2-1317 LS	03/1996 → 12/1998
LK/LN2-1317,1317 L	03/1996 → 12/1998
LK/LN2-1517 K	03/1996 → 12/1998
LK/LN2-1517,1517 L	03/1996 → 12/1998
LK/LN2-811 K	03/1996 → 12/1998
LK/LN2-814 F	03/1996 → 12/1998
LK/LN2-814 K	03/1996 → 12/1998
LK/LN2-814 LO	03/1996 → 12/1998




063522310330 MSN2049 4,0kW 24V

MERCEDES-BENZ	
LK/LN2-814 S	03/1996 → 12/1998
LK/LN2-814,814L	03/1996 → 12/1998
LK/LN2-817 F	03/1996 → 12/1998
LK/LN2-817 K	03/1996 → 12/1998
LK/LN2-817 LO	03/1996 → 12/1998
LK/LN2-817 S,817 LS	03/1996 → 12/1998
LK/LN2-817,817 L	03/1996 → 12/1998
LK/LN2-917 K	03/1996 → 12/1998
TOURINO (O 510)-TOURINO	01/2004 →
UNIMOG-U 300	04/2000 →
UNIMOG-U 3000	09/2002 →
UNIMOG-U 400	04/2000 →
UNIMOG-U 4000	09/2002 →
UNIMOG-U 500, UGN NA	02/2001 →
UNIMOG-U 5000	03/2003 →
UNIMOG-U300	04/2000 →
VARIO Autobus-O 810 (670.373, 670.374)	09/1996 → 01/2001
VARIO Autobus-O 814 (670.373, 670.374)	09/1996 → 01/2001
VARIO Autobus-O 815 (670.373, 670.374)	09/1996 → 01/2001
VARIO Cabina con motore-810 DT (670.398)	→ 09/2006
VARIO Cabina con motore-812 DT (670.398)	→ 01/2001
VARIO Cassone / Furgonato / Promiscuo-613 D, 614 D (668.351, 668.352, 668.353)	09/1996 →
VARIO Cassone / Furgonato / Promiscuo-615 D, 616 D (668.351, 668.352, 668.353)	10/1998 → 09/2006
VARIO Cassone / Furgonato / Promiscuo-618 D	09/2006 → 03/2009
VARIO Cassone / Furgonato / Promiscuo-813 D, 814 D (670.351, 670.352, 670.353)	09/1996 →
VARIO Cassone / Furgonato / Promiscuo-813 DA, 814 DA 4x4 (669.599, 670.451, 670.452, 670.453)	09/1996 → 01/2001
VARIO Cassone / Furgonato / Promiscuo-815 D, 816 D (670.351, 670.352, 670.353)	09/1996 →
VARIO Cassone / Furgonato / Promiscuo-815 DA, 816 DA 4x4 (669.599, 670.451, 670.452, 670.453)	09/1996 →
VARIO Cassone / Furgonato / Promiscuo-818 D	09/2006 → 03/2009
VARIO Pianale piatto/Telaio-613 D, 614 D (668.321, 668.322, 668.323)	09/1996 →
VARIO Pianale piatto/Telaio-615 D, 616 D (668.321, 668.322, 668.323)	10/1998 → 09/2006
VARIO Pianale piatto/Telaio-618 D	09/2006 → 03/2009
VARIO Pianale piatto/Telaio-813 D, 814 D (670.321, 670.322, 670.323, 670.324)	09/1996 →

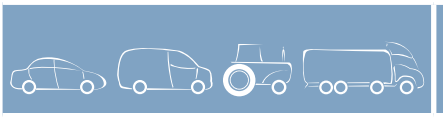


063522310330 MSN2049 4,0kW 24V

MERCEDES-BENZ	
VARIO Pianale piatto/Telaio-813 DA, 814 DA 4x4 (670.421, 670.422, 670.423)	09/1996 → 01/2001
VARIO Pianale piatto/Telaio-815 D, 816 D (670.321, 670.322, 670.323, 670.324)	09/1996 →
VARIO Pianale piatto/Telaio-815 DA, 816 DA 4x4 (670.421, 670.422, 670.423)	09/1996 →
VARIO Pianale piatto/Telaio-818 D	09/2006 → 03/2009
VARIO Pianale piatto/Telaio-818 DA 4x4	09/2006 → 03/2009
VARIO Ribaltabile-613 D, 614 D (668.331, 668.332)	09/1996 →
VARIO Ribaltabile-615 D, 616 D (668.331, 668.332)	10/1998 → 09/2006
VARIO Ribaltabile-618 D	09/2006 → 03/2009
VARIO Ribaltabile-813 D, 814 D (670.331, 670.332)	09/1996 →
VARIO Ribaltabile-813 DA, 814 DA 4x4 (670.431, 670.432)	09/1996 → 01/2001
VARIO Ribaltabile-815 D, 816 D (670.331, 670.332)	09/1996 →
VARIO Ribaltabile-815 DA, 816 DA 4x4 (670.431, 670.432)	09/1996 →
VARIO Ribaltabile-818 D	09/2006 → 03/2009
VARIO Ribaltabile-818 DA 4x4	09/2006 → 03/2009

063522601010 MSN2601 1,2kW 12V

DAEWOO	
ESPERO (KLEJ)-1.8	02/1995 → 06/1999
ESPERO (KLEJ)-2.0	10/1991 → 09/1993
OPEL	
ASCONA C (81_, 86_, 87_, 88_)-1.8	09/1987 → 08/1988
ASCONA C (81_, 86_, 87_, 88_)-1.8 E	01/1985 → 08/1986
ASCONA C (81_, 86_, 87_, 88_)-2.0 i	09/1986 → 08/1988
ASCONA C (81_, 86_, 87_, 88_)-2.0 i GT	03/1987 → 08/1988
ASCONA C 2 volumi /Coda spiovente (84_, 89_)-1.8	09/1987 → 08/1988
ASCONA C 2 volumi /Coda spiovente (84_, 89_)-2.0 i	09/1986 → 08/1988
ASCONA C 2 volumi /Coda spiovente (84_, 89_)-2.0 i GT	03/1987 → 08/1988
ASTRA F (56_, 57_)-1.8 i	03/1992 → 09/1998
ASTRA F (56_, 57_)-2.0 i	03/1992 → 09/1998
ASTRA F 2 volumi /Coda spiovente (53_, 54_, 58_, 59_)-1.8 i	09/1991 → 01/1998
ASTRA F 2 volumi /Coda spiovente (53_, 54_, 58_, 59_)-2.0 GSI 16V	09/1991 → 01/1998




063522601010 MSN2601 1,2kW 12V

OPEL	
ASTRA F 2 volumi /Coda spiovente (53_, 54_, 58_, 59_)-2.0 i	09/1991 → 01/1998
ASTRA F Cabriolet (53_B)-2.0 i	03/1993 → 10/1994
ASTRA F Station wagon (51_, 52_)-1.8 i	09/1991 → 01/1998
ASTRA F Station wagon (51_, 52_)-2.0 i	09/1991 → 07/1994
ASTRA F Station wagon (51_, 52_)-2.0 i 16V	03/1993 → 01/1998
CALIBRA A (85_)-2.0 i	06/1990 → 07/1997
CALIBRA A (85_)-2.0 i 16V	06/1990 → 02/1994
CALIBRA A (85_)-2.0 i Turbo 4x4	03/1992 → 07/1997
FRONTERA A Sport (5_SUD2)-2.0 i (52SUD2, 55SUD2)	03/1992 → 10/1998
KADETT E (39_, 49_)-1.8 i	09/1984 → 08/1991
KADETT E (39_, 49_)-1.8 S	09/1987 → 08/1991
KADETT E (39_, 49_)-2.0 i	03/1987 → 08/1991
KADETT E 2 volumi /Coda spiovente (33_, 34_, 43_, 44_)-1.8 GSI	09/1984 → 08/1986
KADETT E 2 volumi /Coda spiovente (33_, 34_, 43_, 44_)-1.8 i	06/1985 → 08/1991
KADETT E 2 volumi /Coda spiovente (33_, 34_, 43_, 44_)-1.8 S	09/1987 → 08/1991
KADETT E 2 volumi /Coda spiovente (33_, 34_, 43_, 44_)-2.0 GSI	09/1986 → 08/1991
KADETT E 2 volumi /Coda spiovente (33_, 34_, 43_, 44_)-2.0 GSI 16V	12/1987 → 08/1991
KADETT E Cabriolet (43B_)-2.0 i	10/1986 → 02/1993
KADETT E Station wagon (35_, 36_, 45_, 46_)-1.8 i	09/1984 → 08/1991
KADETT E Station wagon (35_, 36_, 45_, 46_)-1.8 S	09/1987 → 08/1991
KADETT E Station wagon (35_, 36_, 45_, 46_)-2.0 i	09/1987 → 08/1991
OMEGA A (16_, 17_, 19_)-1.8	09/1986 → 03/1994
OMEGA A (16_, 17_, 19_)-1.8 N	09/1986 → 08/1987
OMEGA A (16_, 17_, 19_)-1.8 S	09/1986 → 03/1994
OMEGA A (16_, 17_, 19_)-2.0	09/1986 → 03/1994
OMEGA A (16_, 17_, 19_)-2.0 i	09/1986 → 03/1994
OMEGA A Station wagon (66_, 67_)-1.8	09/1986 → 03/1994
OMEGA A Station wagon (66_, 67_)-1.8 N	09/1986 → 08/1987
OMEGA A Station wagon (66_, 67_)-1.8 S	09/1986 → 03/1994
OMEGA A Station wagon (66_, 67_)-2.0	09/1986 → 03/1994
OMEGA A Station wagon (66_, 67_)-2.0 i	09/1986 → 03/1994
VECTRA A (86_, 87_)-1.8 i Cat.	03/1990 → 11/1995
VECTRA A (86_, 87_)-1.8 S	09/1989 → 10/1990
VECTRA A (86_, 87_)-2.0	09/1988 → 09/1989




063522601010 MSN2601 1,2kW 12V

OPEL	
VECTRA A (86_, 87_)-2.0 i	09/1988 → 09/1992
VECTRA A (86_, 87_)-2.0 i Turbo 4x4	06/1994 → 11/1995
VECTRA A (86_, 87_)-2000 16V 4x4	01/1989 → 10/1990
VECTRA A (86_, 87_)-2000/GT 16V	01/1989 → 11/1995
VECTRA A 2 volumi /Coda spiovente (88_, 89_)-1.8 i	09/1988 → 10/1990
VECTRA A 2 volumi /Coda spiovente (88_, 89_)-1.8 i Cat.	03/1990 → 11/1995
VECTRA A 2 volumi /Coda spiovente (88_, 89_)-1.8 S	09/1988 → 07/1989
VECTRA A 2 volumi /Coda spiovente (88_, 89_)-2.0	04/1988 → 09/1989
VECTRA A 2 volumi /Coda spiovente (88_, 89_)-2.0 i	09/1988 → 10/1990
VECTRA A 2 volumi /Coda spiovente (88_, 89_)-2.0 i 16V	02/1989 → 11/1995
VECTRA A 2 volumi /Coda spiovente (88_, 89_)-2.0 i GT	09/1988 → 11/1995
SAAB	
9000-2.0 -16 CD	09/1993 → 12/1998
9000-2.0 -16 Turbo CD	09/1992 → 12/1998
9000-2.3 -16 CD Turbo	07/1990 → 12/1998
9000-2.3 -16 CDE	09/1993 → 12/1998
900 II-2.0 -16 Turbo	07/1993 → 02/1998
900 II-2.0 i	07/1993 → 02/1998
900 II-2.3 -16	07/1993 → 02/1998
900 II Cabriolet-2.0 -16 Turbo	12/1993 → 02/1998
900 II Cabriolet-2.0 i	12/1993 → 02/1998
900 II Cabriolet-2.3 -16	12/1993 → 02/1998
900 II Coupe-2.0 -16 Turbo	12/1993 → 02/1998
900 II Coupe-2.0 i	12/1993 → 02/1998
900 II Coupe-2.3 -16	12/1993 → 02/1998
9000 2 volumi /Coda spiovente-2.0 -16 CS	09/1993 → 12/1998
9000 2 volumi / Coda spiovente-2.0 -16 ND Turbo	09/1993 → 12/1998
9000 2 volumi / Coda spiovente-2.3 -16 Aero CS	02/1993 → 12/1998
9000 2 volumi /Coda spiovente-2.3 -16 CS	09/1989 → 12/1998
9000 2 volumi /Coda spiovente-2.3 -16 CSE	09/1993 → 12/1998
9000 2 volumi /Coda spiovente-2.3 -16 Turbo	09/1990 → 12/1998
9-3 (YS3D)-2.0 i	02/1998 → 09/2002
9-3 (YS3D)-2.0 SE Turbo	02/1998 → 09/2002
9-3 (YS3D)-2.0 Turbo	02/1998 → 09/2002
9-3 (YS3D)-2.3 i	02/1998 → 09/2002




063522601010 MSN2601 1,2kW 12V

SAAB	
9-3 (YS3D)-2.3 Turbo	10/1998 → 09/2002
9-3 Cabriolet (YS3D)-2.0 i	02/1998 → 08/2003
9-3 Cabriolet (YS3D)-2.0 SE Turbo	02/1998 → 08/2003
9-3 Cabriolet (YS3D)-2.0 Turbo	02/1998 → 08/2003
9-3 Cabriolet (YS3D)-2.3 i	02/1998 → 08/2003
9-3 Cabriolet (YS3D)-2.3 Turbo	10/1999 → 08/2003
9-5 (YS3E)-2.0 t	09/1997 →
9-5 (YS3E)-2.3 t	09/1997 →
9-5 (YS3E)-2.3 Turbo	10/1999 → 09/2001
9-5 Station wagon (YS3E)-2.0 t	10/1998 →
9-5 Station wagon (YS3E)-2.3 t	10/1998 →
9-5 Station wagon (YS3E)-2.3 Turbo	10/1999 → 09/2001
VAUXHALL	
ASTRA Mk II 2 volumi / Coda spiovente-2.0 GTE	09/1986 → 08/1991
ASTRA Mk II 2 volumi / Coda spiovente-2.0 GTE 16V	05/1988 → 08/1991
ASTRA Mk II Cabriolet-2.0 i	01/1987 → 12/1991
ASTRA Mk II Cabriolet-2.0 i Cat.	01/1991 → 08/1993
ASTRA Mk III (F)-2.0 i	03/1992 → 09/1998
ASTRA Mk III (F) 2 volumi / Coda spiovente-2.0 i	09/1991 → 02/1998
ASTRA Mk III (F) 2 volumi / Coda spiovente-2.0 i 16V	09/1991 → 02/1998
ASTRA Mk III (F) Station wagon-2.0 i	09/1991 → 02/1998
CALIBRA-2.0 i	06/1990 → 07/1997
CALIBRA-2.0 i 16V	06/1990 → 02/1994
CARLTON Mk III-1.8 N	09/1986 → 08/1987
CARLTON Mk III-2.0	09/1986 → 03/1994
CARLTON Mk III-2.0 i	09/1986 → 03/1994
CARLTON Mk III Station wagon-1.8 N	09/1986 → 08/1987
CARLTON Mk III Station wagon-1.8 S	09/1986 → 03/1994
CARLTON Mk III Station wagon-2.0	09/1986 → 03/1994
CARLTON Mk III Station wagon-2.0 i	09/1990 → 03/1994
CAVALIER Mk II-2.0 SRi 130	03/1987 → 08/1988
CAVALIER Mk II 2 volumi / Coda spiovente-2.0 SRi 130	03/1987 → 08/1988
CAVALIER Mk III (87)-1.8	09/1988 → 08/1995
CAVALIER Mk III (87)-1.8 i Cat.	03/1990 → 11/1995
CAVALIER Mk III (87)-2.0 i	09/1988 → 10/1990
CAVALIER Mk III (87)-2.0 i 16V	09/1988 → 11/1995
CAVALIER Mk III (87)-2.0 i Turbo 4x4	06/1992 → 11/1994
CAVALIER Mk III (87)-2.0 SRi	09/1988 → 09/1992
CAVALIER Mk III 2 volumi / Coda spiovente-1.8	09/1988 → 10/1990
CAVALIER Mk III 2 volumi / Coda spiovente-1.8 i Cat.	03/1990 → 11/1995

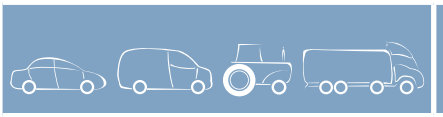


063522601010 MSN2601 1,2kW 12V

VAUXHALL	
CAVALIER Mk III 2 volumi / Coda spiovente-2.0 i	09/1988 → 10/1992
CAVALIER Mk III 2 volumi / Coda spiovente-2.0 i 16V	09/1988 → 11/1995
CAVALIER Mk III 2 volumi /Coda spiovente-2.0 SRi	09/1988 → 09/1992
FRONTERA Mk I (A) Sport-2.0 i	03/1992 → 10/1998

063522602010 MSN2602 0,8kW 12V

DAEWOO	
KALOS (KLAS)-1.4	09/2002 →
KALOS (KLAS)-1.4 16V	04/2003 →
LACETTI 2 volumi / Coda spiovente (KLAN)-1.4	02/2004 →
LACETTI 2 volumi / Coda spiovente (KLAN)-1.6	02/2004 →
LANOS Tre volumi (KLAT)-1.6 16V	05/1997 →
NEXIA (KLETN)-1.5	02/1995 → 08/1997
NEXIA Tre volumi (KLETN)-1.5	02/1995 → 08/1997
NUBIRA Tre volumi (KLAN)-1.6	07/2003 →
OPEL	
ASTRA F (56_, 57_)-1.4 i	09/1991 → 09/1998
ASTRA F (56_, 57_)-1.4 i 16V	02/1996 → 09/1998
ASTRA F (56_, 57_)-1.4 Si	03/1992 → 09/1998
ASTRA F (56_, 57_)-1.6	09/1995 → 09/1998
ASTRA F (56_, 57_)-1.6 i	03/1992 → 09/1998
ASTRA F (56_, 57_)-1.6 Si	05/1992 → 12/1994
ASTRA F 2 volumi / Coda spiovente (53_, 54_, 58_, 59_)-1.4 i	03/1992 → 01/1998
ASTRA F 2 volumi /Coda spiovente (53_, 54_, 58_, 59_)-1.4 i 16V	01/1996 → 01/1998
ASTRA F 2 volumi / Coda spiovente (53_, 54_, 58_, 59_)-1.4 Si	03/1992 → 01/1998
ASTRA F 2 volumi / Coda spiovente (53_, 54_, 58_, 59_)-1.6	09/1995 → 01/1998
ASTRA F 2 volumi / Coda spiovente (53_, 54_, 58_, 59_)-1.6 i	09/1991 → 01/1998
ASTRA F 2 volumi / Coda spiovente (53_, 54_, 58_, 59_)-1.6 i 16V	08/1994 → 01/1998
ASTRA F 2 volumi / Coda spiovente (53_, 54_, 58_, 59_)-1.6 Si	03/1992 → 12/1994
ASTRA F Cabriolet (53_B)-1.4 i 16V	01/1996 → 03/2001
ASTRA F Cabriolet (53_B)-1.4 Si	05/1993 → 03/2001
ASTRA F Cabriolet (53_B)-1.6 i	01/1996 → 03/2001
ASTRA F Station wagon (51_, 52_)-1.4 i	09/1991 → 01/1998




063522602010 MSN2602 0,8kW 12V

OPEL

ASTRA F Station wagon (51_, 52_)-1.4 i 16V	02/1996 → 01/1998
ASTRA F Station wagon (51_, 52_)-1.4 Si	03/1992 → 01/1998
ASTRA F Station wagon (51_, 52_)-1.6 i	09/1991 → 01/1998
ASTRA F Station wagon (51_, 52_)-1.6 Si	03/1992 → 12/1994
ASTRA F Van (55_)-1.4 i	10/1991 → 01/1999
ASTRA F Van (55_)-1.6 i	10/1991 → 04/1993
COMBO (71_)-1.4	07/1994 → 10/2001
CORSA A 2 volumi /Coda spiovente (93_, 94_, 98_, 99_)-1.2 i	09/1989 → 03/1993
CORSA A 2 volumi /Coda spiovente (93_, 94_, 98_, 99_)-1.2 N	01/1990 → 03/1993
CORSA A 2 volumi /Coda spiovente (93_, 94_, 98_, 99_)-1.2 S	09/1982 → 02/1990
CORSA A 2 volumi /Coda spiovente (93_, 94_, 98_, 99_)-1.3	09/1985 → 10/1989
CORSA A 2 volumi /Coda spiovente (93_, 94_, 98_, 99_)-1.3 i	09/1986 → 09/1990
CORSA A 2 volumi /Coda spiovente (93_, 94_, 98_, 99_)-1.3 S	09/1982 → 10/1989
CORSA A 2 volumi /Coda spiovente (93_, 94_, 98_, 99_)-1.4 i	01/1990 → 03/1993
CORSA A 2 volumi /Coda spiovente (93_, 94_, 98_, 99_)-1.4 S	01/1990 → 03/1993
CORSA A 2 volumi /Coda spiovente (93_, 94_, 98_, 99_)-1.4 Si	09/1991 → 03/1993
CORSA A 2 volumi /Coda spiovente (93_, 94_, 98_, 99_)-1.6 GSI	05/1988 → 09/1992
CORSA A Furgonato-1.2	02/1986 → 04/1989
CORSA A Furgonato-1.3	02/1986 → 04/1989
CORSA A TR (91_, 92_, 96_, 97_)-1.2 S	09/1982 → 03/1993
CORSA A TR (91_, 92_, 96_, 97_)-1.3	09/1985 → 10/1987
CORSA A TR (91_, 92_, 96_, 97_)-1.3 S	09/1982 → 10/1987
CORSA A TR (91_, 92_, 96_, 97_)-1.4 S	09/1989 → 03/1993
KADETT E (39_, 49_)-1.4 i	01/1990 → 08/1991
KADETT E (39_, 49_)-1.6 i	09/1986 → 08/1991
KADETT E 2 volumi /Coda spiovente (33_, 34_, 43_, 44_)-1.4 i	01/1990 → 08/1991
KADETT E 2 volumi /Coda spiovente (33_, 34_, 43_, 44_)-1.6 i	09/1986 → 08/1991
KADETT E 2 volumi /Coda spiovente (33_, 34_, 43_, 44_)-1.6 S	09/1986 → 08/1991
KADETT E Cabriolet (43B_)-1.4 i	01/1990 → 08/1991
KADETT E Cabriolet (43B_)-1.6 i	10/1986 → 02/1993
KADETT E Combo (38_, 48_)-1.6 i	08/1991 → 07/1994




063522602010 MSN2602 0,8kW 12V

OPEL

KADETT E Furgonato (37_, 47_)-1.4 i	01/1990 → 08/1991
KADETT E Station wagon (35_, 36_, 45_, 46_)-1.4 i	01/1990 → 08/1991
KADETT E Station wagon (35_, 36_, 45_, 46_)-1.6 i	09/1986 → 08/1991
TIGRA (95_)-1.6 16V	07/1994 → 08/1998
VECTRA A (86_, 87_)-1.4 S	09/1988 → 06/1992
VECTRA A (86_, 87_)-1.6	09/1988 → 05/1993
VECTRA A (86_, 87_)-1.6 i	09/1988 → 11/1995
VECTRA A 2 volumi /Coda spiovente (88_, 89_)-1.6 i	09/1993 → 11/1995
VECTRA A 2 volumi /Coda spiovente (88_, 89_)-1.6 S	09/1988 → 05/1993

VAUXHALL

ASTRA Mk II 2 volumi /Coda spiovente-1.2	09/1984 → 08/1991
ASTRA Mk II 2 volumi /Coda spiovente-1.4 i	01/1990 → 08/1991
ASTRA Mk II 2 volumi /Coda spiovente-1.6	09/1984 → 08/1991
ASTRA Mk II Belmont-1.3	09/1985 → 08/1991
ASTRA Mk II Belmont-1.6 S	01/1989 → 12/1991
ASTRA Mk II Cabriolet-1.6 i	01/1987 → 12/1991
ASTRA Mk II Station wagon-1.3	09/1984 → 08/1991
ASTRA Mk II Station wagon-1.6	09/1984 → 08/1991
ASTRA Mk III (F)-1.4 i	04/1992 → 09/1998
ASTRA Mk III (F)-1.6 i	05/1992 → 12/1994
ASTRA Mk III (F) 2 volumi / Coda spiovente-1.4 i	09/1991 → 02/1998
ASTRA Mk III (F) 2 volumi / Coda spiovente-1.6 i	09/1991 → 02/1998
ASTRA Mk III (F) Cabriolet-1.4 i	05/1993 → 03/2001
ASTRA Mk III (F) Station wagon-1.4 i	03/1991 → 02/1998
ASTRA Mk III (F) Station wagon-1.6 i	09/1991 → 02/1998
ASTRA Mk III (F) Station wagon-1.6 i 16V	01/1994 → 02/1998
ASTRA Mk III (F) Station wagon-1.6 Si	03/1991 → 12/1994
ASTRAVAN Mk III (F)-1.4 i	01/1991 → 10/1994
ASTRAVAN Mk III (F)-1.6 i	01/1991 → 08/1998
CAVALIER Mk III (87)-1.6	09/1988 → 05/1993
CAVALIER Mk III (87)-1.6 i	09/1988 → 11/1995
CAVALIER Mk III 2 volumi / Coda spiovente-1.6	09/1988 → 05/1993
CAVALIER Mk III 2 volumi / Coda spiovente-1.6 i	09/1993 → 11/1995
TIGRA Mk I-1.4 16V	07/1994 → 12/2000

063522603010 MSN2603 2,0kW 12V

HYUNDAI

H-1 Furgonato-2.5 TD	10/2001 → 07/2003

063522604010 MSN2604 1,4kW 12V

DAEWOO

ESPERO (KLEJ)-1.5 16V	02/1995 → 06/1999

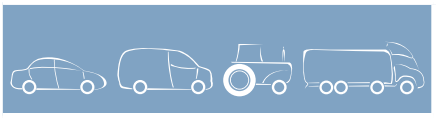


063522604010 MSN2604 1,4kW 12V	
DAEWOO	
LANOS (KLAT)-1.4	05/1997 →
LANOS (KLAT)-1.5	05/1997 →
LANOS (KLAT)-1.6 16V	05/1997 →
LANOS Tre volumi (KLAT)-1.4	05/1997 →
LANOS Tre volumi (KLAT)-1.5	05/1997 →
LANOS Tre volumi (KLAT)-1.6 16V	05/1997 →
NEXIA (KLETN)-1.5	02/1995 → 08/1997
NEXIA Tre volumi (KLETN)-1.5	02/1995 → 08/1997
NUBIRA (KLAJ)-1.6 16V	05/1997 →
NUBIRA Tre volumi (KLAJ)-1.6 16V	05/1997 →
NUBIRA Tre volumi (KLAN)-1.6	03/2004 →
NUBIRA Wagon (KLAJ)-1.6 16V	05/1997 →
NUBIRA Wagon (KLAN)-1.6	03/2004 →
REZZO (KLAU)-1.8	09/2000 →
063522605010 MSN2605 0,9kW 12V	
HYUNDAI	
ACCENT II (LC)-1.3	02/2003 →
COUPE (GK)-1.6 16V	03/2002 →
ELANTRA (XD)-1.6	06/2000 →
ELANTRA Tre volumi (XD)-1.6	06/2000 →
GETZ (TB)-1.3 i	09/2002 →
GETZ (TB)-1.6	09/2002 →
MATRIX (FC)-1.6	04/2002 →
KIA	
CERATO (LD)-1.6	07/2004 →
CERATO Tre volumi (LD)-1.6	04/2004 →
063522606010 MSN2606 0,85kW 12V	
KIA	
CARENS II (FJ)-1.6	07/2002 →
RIO (DC_)-1.3	09/2000 → 02/2005
RIO (DC_)-1.5 16V	09/2000 → 02/2005
RIO Station wagon (DC)-1.3	08/2000 → 02/2005
RIO Station wagon (DC)-1.5 16V	08/2000 → 02/2005
SHUMA II (FB)-1.6	05/2001 → 08/2004
SHUMA II Tre volumi (FB)-1.6	05/2001 → 05/2004
063522607010 MSN2607 0,8kW 12V	
DAEWOO	
MATIZ (KLYA)-0.8	09/1998 → 03/2002
MATIZ (KLYA)-1.0	01/2003 → 09/2004
063522608010 MSN2608 2,2kW 12V	
SSANGYONG	
KORANDO (KJ)-2.9 TD	07/1999 →
KORANDO Cabrio (KJ)-2.9 TD	07/1999 →
MUSSO (FJ)-2.9 TD	04/1998 →

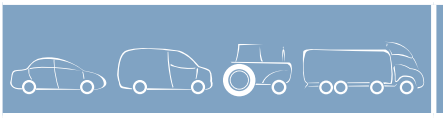


063522608010 MSN2608 2,2kW 12V	
SSANGYONG	
REXTON (GAB_)-2.7 Xdi	08/2004 →
REXTON (GAB_)-2.9 TD	02/2003 →
063522609010 MSN2609 2,0kW 12V	
HYUNDAI	
ELANTRA (XD)-2.0 CRDi	04/2001 →
ELANTRA Tre volumi (XD)-2.0 CRDi	04/2001 →
SANTA FE (SM)-2.0 CRDi	08/2001 →
TRAJET (FO)-2.0 CRDi	04/2001 →
KIA	
CARENS II (FJ)-2.0 CRDi	07/2002 →
063522610010 MSN2610 2,0kW 12V	
KIA	
SPORTAGE (K00)-2.0 TD 4WD	12/1998 → 08/2003
063522611010 MSN2611 0,9kW 12V	
HYUNDAI	
ATOS (MX)-1.0 i	03/2001 →
ATOS (MX)-1.1	03/2004 →
ATOS PRIME (MX)-1.0 i	03/2001 →
ATOS PRIME (MX)-1.1	06/2003 →
GETZ (TB)-1.1	09/2002 →
KIA	
PICANTO (BA)-1.0	09/2005 →
PICANTO (BA)-1.1	04/2004 →
063522612010 MSN2612 1,5kW 12V	
DAEWOO	
EVANDA (KLAL)-2.0	08/2002 →
LEGANZA (KLAV)-2.0 16V	06/1997 → 12/2002
NUBIRA Tre volumi (KLAN)-1.8	04/2004 →
NUBIRA Wagon (KLAN)-1.8	04/2004 →
REZZO (KLAU)-2.0	09/2000 →
063522613010 MSN2613 2,0kW 12V	
HYUNDAI	
H-1 Furgonato-2.5 TD	04/2002 → 05/2004
STAREX (H1)-2.5 TD	06/1997 →
MITSUBISHI	
COLT III (C5_A)-1.8 Diesel GLX (C54A)	04/1988 → 05/1992
GALANT II (A16_)-2.3 Turbo-D (A167)	09/1980 → 05/1984
GALANT II Station Wagon (A16_V)-2.3 Turbo-D (A167V)	07/1983 → 05/1984
GALANT IV (E3_A)-1.8 Turbo-D (E34A)	11/1988 → 10/1992
GALANT IV Tre volumi (E3_A)-1.8 Turbo-D (E34A)	12/1987 → 10/1992
GALANT V (E5_A, E7_A, E8_A)-2.0 GLSTD (E57A)	11/1992 → 08/1996




063522613010 MSN2613 2,0kW 12V	
MITSUBISHI	
GALANT VI (EA_)-2.0 TDI (EA6A)	09/1996 → 10/2004
GALANT VI Station wagon (EA_)-2.0 TDI (EA6W)	09/1996 → 10/2003
L 200 (K__T)-2.5 D (K14T)	11/1986 → 08/1996
L 200 (K__T)-2.5 TD 4WD (K34T)	11/1992 → 08/1996
L 300 Autobus (LO3_P/G, L0_2P)-2.3 D (L038P)	04/1983 → 10/1986
L 300 Autobus (P0_W, P1_W, P2_W)-2.5 D (P25V, P05W, P05V, P15V, P15T)	11/1986 →
L 300 Furgonato (L03_P)-2.3 D (L038P, L068P)	09/1983 → 10/1986
L 300 Furgonato (P0_W, P1_W)-2.5 D (P05V, P05W, P15V)	11/1986 →
LANCER V (CB/D_A)-2.0 Diesel (CB8A)	06/1992 →
LANCER V Station Wagon (CB_W, CD_W)-2.0 D (CB8W)	12/1992 → 10/2003
PAJERO I Fuoristrada aperto (L04_G)-2.3 TD (L043G, L048G)	12/1982 → 10/1989
SPACE RUNNER (N1_W, N2_W)-2.0 TD (N18W)	10/1992 → 08/1999
SPACE WAGON (D0_V/W)-1.8 TD (D09V, D09W)	06/1986 → 04/1991
SPACE WAGON (N3_W, N4_W)-1.8 TD (N35W)	10/1991 → 10/1998
SPACE WAGON (N3_W, N4_W)-2.0 TD (N38W)	10/1992 → 10/1998
063522614010 MSN2614 2,0kW 12V	
KIA	
SPORTAGE (K00)-2.0 TD 4WD	10/1997 → 11/1998
063522615010 MSN2615 2,2kW 12V	
KIA	
CARNIVAL (UP)-2.9 TD	08/1999 → 10/2001
CARNIVAL II (GQ)-2.9 CRDi	10/2001 →
063522616010 MSN2616 2,2kW 12V	
HYUNDAI	
TERRACAN (HP)-2.9 CRDi 4WD	12/2001 →
063522617010 MSN2617 1,2kW 12V	
HYUNDAI	
H-1 Autobus (KMF)-2.4	10/1997 →
H-1 Furgonato-2.4	03/2000 →
H100 Autobus (P)-2.4	07/1993 → 03/2000
LANTRA I (J-1)-1.6 i.e. 16V	10/1990 → 11/1995
LANTRA I (J-1)-1.8 i.e. 16V	10/1990 → 04/1995
SANTAMO-2.0 16V	05/1999 →




063522617010 MSN2617 1,2kW 12V	
HYUNDAI	
SONATA II (Y-2)-1.8 i	09/1988 → 10/1993
SONATA II (Y-2)-2.0 i	09/1988 → 10/1993
SONATA II (Y-2)-2.4 i	09/1988 → 08/1991
SONATA III (Y-3)-2.0 i	08/1996 → 06/1998
SONATA III (Y-3)-2.0 i 16V	05/1993 → 06/1998
KIA	
JOICE-2.0	02/2004 →
MAZDA	
B-SERIE (UF)-2.6 4x4	01/1987 → 10/1990
MITSUBISHI	
ECLIPSE I (D2_A)-2.0 i 16V (D22A, D27A)	04/1991 → 11/1995
ECLIPSE II (D3_)-2000 GS 16V (D32A)	12/1995 → 04/1999
ECLIPSE II (D3_)-2000 GT 16V	12/1995 → 04/1999
GALANT IV (E3_A)-2.0 (E39A, E38A, E33A)	04/1989 → 10/1992
GALANT IV (E3_A)-2.0 GTI 16V (E39A, E38A, E33A)	11/1988 → 10/1992
GALANT IV Tre volumi (E3_A)-2.0 4x4 (E39A, E38A, E33A)	12/1988 → 10/1992
GALANT IV Tre volumi (E3_A)-2.0 GTI 16V 4x4 (E38A, E39A, E33A) Cat.	09/1991 → 10/1992
GALANT V Tre volumi (E5_A, E7_A, E8_A)-2.0 GLSI (E75A, E55A)	11/1992 → 08/1996
L 200 (K__T)-2.6 4WD (K33T)	11/1989 → 05/1995
L 300 Autobus (LO3_P/G, L0_2P)-2.0 4x4 (L037G)	11/1986 → 02/1987
L 300 Autobus (P0_W, P1_W, P2_W)-2.0 (P13V, P03W, P13T)	11/1986 →
L 300 Autobus (P0_W, P1_W, P2_W)-2.0 4WD (P13V, P23W, P03V, P13T)	11/1986 →
LANCER IV (C6_A, C7_A)-1.8 GTi 16V (C69A)	06/1992 → 12/1993
SAPPORO III (E16A)-2.4 (E16A)	06/1987 → 08/1990
SPACE WAGON (D0_V/W)-2.0 4x4 (D08W)	03/1985 → 04/1991
SPACE WAGON (D0_V/W)-2.0 GLX (D04W)	06/1986 → 05/1988
SPACE WAGON (D0_V/W)-2.0 GLXi (D04W)	06/1988 → 04/1991
063522618010 MSN2618 1,2Kw 12V	
HYUNDAI	
SONATA IV (EF)-2.5 V6 24V	06/1998 → 10/2001
SONATA VI (YF)-2.7 V6	11/2002 → 11/2004
TRAJET (FO)-2.7 V6	09/2000 →
XG (XG)-30/300	12/1998 →
KIA	
MAGENTIS (GD)-2.5 V6	05/2001 →
063522619010 MSN2619 1,2kW 12V	
HYUNDAI	
SANTA FE (SM)-2.0	08/2001 →
SANTA FE (SM)-2.4 16V	02/2001 →
SONATA IV (EF)-2.0 16V	06/1998 → 10/2001




063522619010 MSN2619 1,2kW 12V	
HYUNDAI	
SONATA IV (EF)-2.4 16V	03/1998 → 10/2001
SONATA VI (YF)-2.0 16V	03/2002 → 11/2004
TRAJET (FO)-2.0	01/2004 →
KIA	
MAGENTIS (GD)-2.0	05/2001 →
SORENTO (JC)-2.4	08/2002 →
063522620010 MSN2620 0,9kW 12V	
HYUNDAI	
ACCENT II (LC)-1.3	01/2000 → 12/2003
COUPE (RD)-1.6 i 16V	12/1996 → 12/2000
ELANTRA (XD)-1.6	06/2000 →
LANTRA II (J-2)-1.5 12V	12/1996 → 09/2000
SANTAMO-2.0 16V	05/1999 → 12/2002
KIA	
JOICE-2.0	01/2004 →
063522621010 MSN2621 1,2kW 12V	
HYUNDAI	
COUPE (RD)-2.0 16V	08/1996 → 04/2002
LANTRA II (J-2)-1.6 i	07/1996 → 09/2000
LANTRA II (J-2)-1.8 16V	07/1996 → 09/2000
LANTRA II (J-2)-2.0 16V	08/1996 → 09/2000
MATRIX (FC)-1.8	06/2001 →
TRAJET (FO)-2.0	03/2000 →
TUCSON (JM)-2.0	08/2004 →
KIA	
CERATO (LD)-2.0	04/2004 →
063522622010 MSN2622 2,0kW 12V	
HYUNDAI	
TUCSON (JM)-2.0 CRDi	08/2004 →
KIA	
SPORTAGE (JE_)-2.0 CRDi	02/2005 →
063522623010 MSN2623 2,0kW 12V	
HYUNDAI	
GALLOPER II (JK-01)-2.5 TD	08/1998 → 10/2002
063522624010 MSN2624 1,2kW 12V	
KIA	
CARENS I (FC)-1.8 i	11/2000 → 07/2002
CARENS II (FJ)-1.6	07/2002 →
CARENS II (FJ)-1.8	07/2002 →
CLARUS (K9A)-1.8 i 16V	07/1996 →
CLARUS (K9A)-2.0 i 16V	07/1996 →
CLARUS Station wagon (GC)-1.8 i 16V	05/1998 →
CLARUS Station wagon (GC)-2.0 i 16V	05/1998 →
RETONA (CE)-2.0 16V	05/2000 →

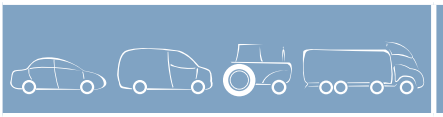


063522624010 MSN2624 1,2kW 12V	
KIA	
SEPHIA (FA)-1.8 i 16V	01/1995 →
SEPHIA Tre volumi (FA)-1.8 i 16V	01/1995 →
SHUMA II (FB)-1.8	04/2003 → 08/2004
SPORTAGE (K00)-2.0	10/2000 → 08/2003
SPORTAGE (K00)-2.0 i 16V 4WD	04/1994 → 08/2003
SPORTAGE (K00)-2.0 i 4WD	04/1994 → 08/1999
MAZDA	
323 F VI (BJ)-2.0	01/2001 → 05/2004
323 S VI (BJ)-2.0	01/2001 → 05/2004
626 III (GD)-2.2 12V	11/1987 → 07/1991
626 III Coupe (GD)-2.2 12V	04/1988 → 12/1991
626 III Hatchback (GD)-2.2 12V	06/1988 → 04/1992
626 III Station Wagon (GV)-2.0	10/1988 → 09/1997
626 III Station Wagon (GV)-2.0 16V	01/1988 → 03/1992
626 III Station Wagon (GV)-2.0 GLX	04/1992 → 02/1995
626 III Station Wagon (GV)-2.2 12V	03/1989 → 11/1996
929 III (HC)-2.2 12V	01/1988 → 06/1991
929 III (HC)-2.2 i	05/1987 → 12/1988
MPV II (LW)-2.0	08/2000 → 07/2002
PREMACY (CP)-2.0	02/2005 →
PREMACY (CP)-2.3 SVT	02/2005 →
XEDOS 9 (TA)-2.5 V6	07/2000 →
063522625010 MSN2625 0,9kW 12V	
KIA	
CARENS I (FC)-1.8 i	11/2000 → 07/2002
CARENS II (FJ)-1.6	07/2002 →
CARENS II (FJ)-1.8	07/2002 →
CLARUS (K9A)-1.8 i 16V	07/1996 →
CLARUS (K9A)-2.0 i 16V	07/1996 →
CLARUS Station wagon (GC)-1.8 i 16V	05/1998 →
CLARUS Station wagon (GC)-2.0 i 16V	05/1998 →
RETONA (CE)-2.0 16V	05/2000 →
SEPHIA (FA)-1.5 i	02/1996 →
SEPHIA (FA)-1.6 i	01/1995 →
SEPHIA Tre volumi (FA)-1.5 i	02/1996 → 10/1997
SEPHIA Tre volumi (FA)-1.6 i	09/1993 →
SHUMA (FB)-1.5 i 16V	10/1997 → 03/2001
SHUMA (FB)-1.8 i 16V	10/1997 → 03/2001
SHUMA II (FB)-1.8	04/2003 → 08/2004
SHUMA Tre volumi (FB)-1.5	03/1996 → 12/1998
SHUMA Tre volumi (FB)-1.5 i 16V	10/1997 → 10/2001
SPORTAGE (JE_)-2.0 i 16V	09/2004 →
SPORTAGE (K00)-2.0	10/2000 → 08/2003
SPORTAGE (K00)-2.0 i 16V	10/2000 → 08/2003




063522625010 MSN2625 0,9kW 12V	
KIA	
SPORTAGE (K00)-2.0 i 4WD	04/1994 → 08/1999
063522625010 MSN2625 0,9kW 12V	
MAZDA	
323 C IV (BG)-1.3	09/1989 → 07/1994
323 C IV (BG)-1.3 16V	09/1989 → 07/1994
323 C IV (BG)-1.6	09/1989 → 06/1991
323 C IV (BG)-1.6 16V	03/1991 → 10/1994
323 C IV (BG)-1.8 16V	09/1989 → 03/1993
323 C IV (BG)-1.8 16V GT	09/1989 → 03/1993
323 C IV (BG)-1.8 16V Turbo 4WD	09/1990 → 07/1994
323 C V (BA)-1.3 16V	08/1994 → 09/1998
323 C V (BA)-1.5 16V	08/1994 → 09/1998
323 C V (BA)-1.8 16V	08/1994 → 09/1998
323 F IV (BG)-1.6	09/1989 → 06/1991
323 F IV (BG)-1.6 16V	03/1991 → 10/1994
323 F IV (BG)-1.8 16V	08/1989 → 07/1994
323 F IV (BG)-1.8 16V GT	08/1989 → 07/1994
323 F IV (BG)-1.8 4WD	01/1991 → 04/1994
323 F V (BA)-1.5 16V	07/1994 → 09/1998
323 F V (BA)-1.8 16V	08/1994 → 09/1998
323 F VI (BJ)-1.4 16V	09/1998 → 01/2001
323 F VI (BJ)-1.6	01/2001 → 05/2004
323 III (BF)-1.1	08/1985 → 04/1990
323 III (BF)-1.3	08/1985 → 05/1989
323 III (BF)-1.4	04/1987 → 07/1989
323 III (BF)-1.5	08/1985 → 10/1989
323 III (BF)-1.5 i	08/1985 → 05/1989
323 III (BF)-1.6 GLX	06/1986 → 03/1987
323 III (BF)-1.6 GT	01/1986 → 10/1989
323 III (BF)-1.6 GT Turbo	10/1985 → 11/1991
323 III Hatchback (BF)-1.1	09/1985 → 10/1989
323 III Hatchback (BF)-1.3 i	09/1985 → 08/1989
323 III Hatchback (BF)-1.4	09/1987 → 10/1989
323 III Hatchback (BF)-1.5	08/1985 → 10/1989
323 III Hatchback (BF)-1.5 i	08/1985 → 05/1989
323 III Hatchback (BF)-1.6	09/1987 → 10/1989
323 III Hatchback (BF)-1.6 GT	08/1985 → 10/1989
323 III Hatchback (BF)-1.6 GT Turbo (BF1)	10/1985 → 11/1991
323 III Hatchback (BF)-1.6 GT Turbo 4WD (BF2)	10/1987 → 11/1991
323 III Station Wagon (BW)-1.3	07/1986 → 04/1990
323 III Station Wagon (BW)-1.5	05/1986 → 05/1989
323 III Station Wagon (BW)-1.6	09/1986 → 10/1995
323 P V (BA)-1.3 16V	10/1996 →




063522625010 MSN2625 0,9kW 12V	
MAZDA	
323 P V (BA)-1.5 16V	10/1996 →
323 S IV (BG)-1.3	09/1989 → 06/1991
323 S IV (BG)-1.3 16V	04/1991 → 07/1994
323 S IV (BG)-1.6	09/1989 → 06/1991
323 S IV (BG)-1.6 16V	08/1989 → 10/1994
323 S IV (BG)-1.8 16V	08/1989 → 07/1994
323 S IV (BG)-1.8 16V GT	06/1989 → 07/1994
323 S V (BA)-1.3 16V	08/1994 → 09/1998
323 S V (BA)-1.5 16V	08/1994 → 09/1998
323 S V (BA)-1.8 16V	08/1994 → 09/1998
323 S VI (BJ)-1.5 16V	09/1998 → 01/2001
323 S VI (BJ)-1.6	01/2001 → 05/2004
626 II (GC)-1.6	11/1982 → 06/1987
626 II (GC)-2.0	03/1983 → 09/1987
626 II Hatchback (GC)-1.6	03/1983 → 09/1987
626 II Hatchback (GC)-2.0	03/1983 → 09/1987
626 III (GD)-1.6	06/1987 → 05/1992
626 III (GD)-1.8	11/1987 → 05/1992
626 III (GD)-2.0	09/1987 → 10/1990
626 III (GD)-2.0 12V	09/1987 → 05/1992
626 III (GD)-2.0 16V	07/1987 → 05/1992
626 III (GD)-2.2 12V	11/1987 → 07/1991
626 III Coupe (GD)-1.6	06/1987 → 05/1992
626 III Coupe (GD)-1.8	09/1987 → 08/1991
626 III Coupe (GD)-2.0	09/1987 → 10/1990
626 III Coupe (GD)-2.0 12V	09/1987 → 12/1988
626 III Coupe (GD)-2.0 16V	06/1987 → 10/1990
626 III Hatchback (GD)-1.6	06/1987 → 05/1992
626 III Hatchback (GD)-1.8	11/1987 → 05/1992
626 III Hatchback (GD)-2.0	09/1987 → 10/1990
626 III Hatchback (GD)-2.0 12V	11/1987 → 05/1992
626 III Hatchback (GD)-2.0 16V	06/1987 → 10/1990
626 III Hatchback (GD)-2.2 12V	06/1988 → 04/1992
626 III Station Wagon (GV)-1.8	01/1988 → 03/1992
626 III Station Wagon (GV)-2.0 12V	09/1987 → 01/1990
626 III Station Wagon (GV)-2.0 i 16V	11/1994 → 09/1997
929 II (HB)-2.0	03/1984 → 07/1987
929 II (HB)-2.0 i GLX	10/1984 → 07/1987
929 II Coupe (HB)-2.0	03/1984 → 07/1987
929 II Coupe (HB)-2.0 i Turbo	10/1984 → 07/1987
929 III (HC)-2.0	06/1987 → 12/1988
B-SERIE (UF)-2.2	08/1991 → 12/1996
DEMIO (DW)-1.3 16V	08/1998 →
DEMIO (DW)-1.3 i 16V	08/1998 → 04/2000

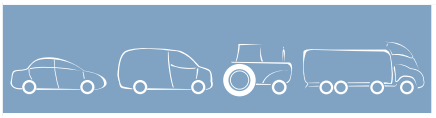


063522625010 MSN2625 0,9kW 12V	
MAZDA	
E-SERIE Autobus (SR1)-E2000	11/1984 → 02/1988
E-SERIE Furgonato (SR2)-E2000	05/1985 → 05/1994
MX-3 (EC)-1.6 i	07/1991 →
063522626010 MSN2626 1,2kW 12V	
HYUNDAI	
i30-2.0	10/2007 →
KIA	
CEE'D 2 volumi /Coda spiovente (ED)-2.0	12/2006 →
SPORTAGE (JE_)-2.0 16V 4WD	09/2004 →
SPORTAGE (JE_)-2.0 i 16V	09/2004 →
063522627010 MSN2627 1,4kW 12V	
HYUNDAI	
H100 Furgonato-2.6 D	10/1999 →
KIA	
CARNIVAL (UP)-2.5 V6	08/1999 → 10/2001
CARNIVAL II (GQ)-2.5 V6	03/2002 →
063522628010 MSN2628 2,0kW 12V	
KIA	
SORENTO (JC)-2.5 CRDi	08/2002 →
063522629010 MSN2629 0,8kW 12V	
DAEWOO	
KALOS (KLAS)-1.2	04/2003 →
063522630200 MSN2118 4,0kW 24V	
IVECO	
621D - 6TAA-6802-Tutte	→
NEW HOLLAND	
EXCAVATORS-E215B	01/2007 →
WHEEL LOADER-LW110B	01/2005 →
WHEEL LOADER-LW130B	01/2005 →
063523620390 MSN2050 3,0kW 12V	
AGRIFULL	
SERIE 45-45 - 66RM-DT	01/1990 →
SERIE 45-DT	02/1987 →
SERIE 50-50	07/1986 →
SERIE 50-50 - DT	07/1986 →
SERIE 55-55	03/1985 → 12/1989
SERIE 55-55 - 85M/V	09/1992 →
SERIE 55-55 - 86F/V	09/1992 →
SERIE 55-55 - DT	03/1985 →
SERIE 55-C Vigneto	03/1985 →
SERIE 55-DT Frutteto	04/1985 →
SERIE 55-DT Vigneto	06/1987 →
SERIE 55-Vigneto	04/1985 →
SERIE 570-570 Frutteto / Vigneto	09/1980 → 12/1983

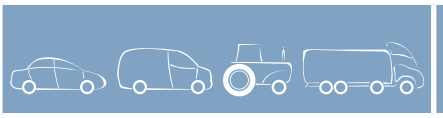


063523620390 MSN2050 3,0kW 12V	
AGRIFULL	
SERIE 60-60 - 85F/V	09/1992 →
SERIE 60-60 - C	03/1985 →
SERIE 60-60 - CL	03/1985 →
SERIE 60-60 - LM	09/1987 → 12/1990
SERIE 60-60 - LM/DT	01/1991 →
SERIE 60-DT Frutteto	03/1985 →
SERIE 60-Frutteto	03/1985 →
SERIE 66-66 DT	01/1985 →
SERIE 80-80 - 46	03/1984 → 12/1984
SERIE 80-80 - 56	04/1984 → 12/1984
BENFRA	
MOVIMENTO TERRA-1.15	07/1987 →
FIAT	
474-Tutte	04/1983 → 12/1984
566-Tutte	02/1982 → 12/1984
25 - H2-Tutte	11/1985 → 04/1989
25 - H4-Tutte	11/1985 → 04/1989
25 - M2-Tutte	11/1985 → 12/1988
25 - M4-Tutte	11/1985 → 12/1988
30 - H2/H4-Tutte	11/1985 → 04/1989
30 - M2/M4-Tutte	11/1985 → 12/1988
465 - C-Tutte	06/1982 → 12/1984
466 - DT-Tutte	12/1982 → 12/1984
480 - DT/S-Tutte	01/1976 → 03/1982
500 - DT-Tutte	06/1973 → 03/1982
500 - DT/S-Tutte	06/1978 → 03/1982
505 - C-Tutte	01/1973 → 12/1980
505 - S-Tutte	12/1980 → 07/1982
540 - DT/S-Tutte	03/1972 → 03/1982
55 - 46-Tutte	01/1985 → 12/1988
55 - 56-Tutte	01/1989 →
55 - 65-Tutte	10/1984 → 02/1989
55 - 66-Tutte	01/1990 →
55 - 66DT-Tutte	09/1984 →
55 - 66LP-Tutte	04/1985 → 06/1988
55 - 66LP/DT-Tutte	04/1985 → 06/1988
55 - 75-Tutte	03/1989 →
55 - 88-Tutte	01/1990 →
55 - 90-Tutte	03/1984 → 06/1989
55 - F10-Tutte	04/1978 → 10/1980
565 - C-Tutte	06/1982 → 12/1984
570 - DT-Tutte	12/1977 → 02/1982
570 - F/V-Tutte	09/1980 → 12/1984
580 - DT-Tutte	12/1977 → 02/1984




063523620390 MSN2050 3,0kW 12V	
FIAT	
60 - 46-Tutte	09/1987 → 12/1988
60 - 56-Tutte	01/1989 →
60 - 65-Tutte	10/1984 → 01/1989
60 - 66-Tutte	09/1984 →
60 - 66DT-Tutte	09/1984 →
60 - 66LP/DT-Tutte	04/1985 → 06/1988
60 - 75-Tutte	03/1989 →
60 - 88-Tutte	11/1989 →
60 - 90DT-Tutte	03/1984 → 06/1989
66 DT Frutteto - 55-Tutte	04/1985 →
66 DT Frutteto - 60-Tutte	04/1985 → 06/1988
66 Frutteto - 60-Tutte	04/1985 → 06/1988
66 Vigneto - 55-Tutte	04/1985 →
66DT Vigneto - 55-Tutte	05/1987 →
BI - 20C/25C/30C-Tutte	01/1980 → 12/1987
BIM - 20/25-Tutte	01/1972 → 12/1982
DIM - 20/25-Tutte	01/1971 → 12/1982
DM - 12/15-Tutte	01/1971 → 12/1982
R - 450/DT-Tutte	06/972 → 09/1980
R - H2/H4-Tutte	11/1985 → 04/1989
R - M2/M4-Tutte	11/1985 → 12/1988
FIAT OM CARRELLI ELEV	
DI - 12/15-Tutte	01/1971 → 12/1982
FIATALLIS	
MOVIMENTO TERRA-4	11/1970 → 07/1978
MOVIMENTO TERRA-FL - 4C	11/1970 → 07/1978
IVECO	
25 - H2/H4-Tutte	11/1985 → 04/1989
25 - M2/M4-Tutte	11/1985 → 04/1989
30 - H2/H4-Tutte	11/1985 → 04/1989
30 - M2/M4-Tutte	11/1985 → 04/1989
AIFO 8035-8035 - 2300	06/1973 → 12/1984
AIFO 8040-8040 - 25900	06/1987 →
AIFO 8041-8041 - 2301	06/1974 → 12/1980
AIFO 8041-8041 - 4200	06/1979 → 02/1980
AIFO 8041-8041 - 4250	06/1979 → 06/1983
AIFO 8041-8041 - 4260	01/1984 → 12/1984
AIFO 8041-8041 - 5260	06/1987 →
AIFO 8045-8045 - 2285	06/1973 → 12/1981
AIFO 8045-8045 - 2300	06/1973 → 12/1981
AIFO 8061-8061 - 5260	06/1987 → 12/1989
AIFO 8141-8141 - 61200	10/1981 → 05/1983
NEW HOLLAND	
45 - 66 2RM DT-Tutte	01/1990 →




063523620390 MSN2050 3,0kW 12V	
NEW HOLLAND	
55 - 56-Tutte	01/1989 →
55 - 66-Tutte	01/1990 →
55 - 66DT-Tutte	09/1984 →
55 - 75-Tutte	03/1989 →
55 - 85M/V-Tutte	09/1992 →
55 - 86F/V-Tutte	09/1992 →
55 - 88-Tutte	11/1989 →
60 - 56-Tutte	01/1989 →
60 - 66-Tutte	01/1990 →
60 - 66DT-Tutte	09/1984 →
60 - 75-Tutte	03/1989 →
60 - 85F/V-Tutte	09/1992 →
60 - 86F/V-Tutte	09/1992 →
60 - 88-Tutte	11/1989 →
66 DT Frutteto - 55-Tutte	04/1985 →
66 DT Vigneto - 45-Tutte	01/1985 →
66 DT Vigneto - 55-Tutte	05/1987 →
66 Vigneto - 55-Tutte	04/1985 →
WHITE	
FARM TRACTOR-WHITE - 2-50/2-60/2-70	01/1976 → 01/1984
063523620760 MSN2051 2,4Kw 12V	
AGRIFULL	
SERIE 80-80 - 56	04/1982 → 06/1983
SERIE 80-80 - 56DT	04/1982 → 06/1983
DEUTZ	
F 1L 410-Tutte	03/1968 → 06/1973
F 2L 411 - D-Tutte	07/1973 → 12/1975
FARYMANN (FARNY & WEIDMANN)	
G10-Tutte	01/1972 → 10/1981
G20-Tutte	01/1972 → 10/1981
FARYMANN DIESEL	
DIESEL ENGINE-71W	04/1977 →
DIESEL ENGINE-71W8	04/1977 →
FENDT	
FARM-1E	01/1968 → 05/1974
FARM-2DE	01/1968 → 03/1971
FARM-2E	01/1968 → 08/1970
FARM-2N	10/1969 → 12/1974
FARM-2S	10/1969 → 01/1972
FARM-3S	01/1968 → 01/1968
FARM-4S	01/1968 → 05/1972
FARM-F231 - GT	09/1965 → 12/1978
FARM-FIX - 2E	01/1968 → 05/1974

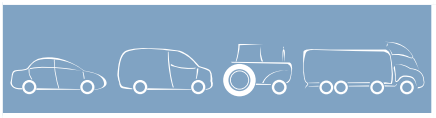


063523620760 MSN2051 2,4Kw 12V	
LANZ	
NF-Tutte	04/1977 → 12/1980
NI - F/R-Tutte	04/1977 → 12/1980
NO-Tutte	04/1977 → 12/1980
LOMBARDINI	
LDAM - 672-Tutte	04/1977 →
LDAM - 674-Tutte	07/1976 → 12/1981
LDAM - 832-Tutte	04/1977 → 12/1979
LDAM - 833-Tutte	07/1976 → 12/1979
LDAM - 834-Tutte	07/1976 → 12/1979
MWM	
D208 - 2-Tutte	01/1965 → 12/1973
D208 - 3-Tutte	01/1965 → 12/1973
D208 - 4-Tutte	01/1965 → 12/1973
D225 - 2-Tutte	04/1967 → 12/1975
D225 - 3-Tutte	04/1967 → 12/1979
D226 - 2-Tutte	01/1972 →
D226 - 3-Tutte	01/1972 →
D308 - 2-Tutte	01/1965 → 12/1973
D308 - 3-Tutte	01/1965 → 12/1973
D308 - 4-Tutte	01/1965 → 12/1973
D325 - 2-Tutte	04/1967 → 12/1978
D325 - 3-Tutte	04/1967 → 12/1979
D327 - 2-Tutte	01/1972 →
D327 - 3-Tutte	01/1972 →
TD208 - 4-Tutte	02/1966 → 12/1973
SCHANZLIN	
TRACTOR-Gigant 300 K Traktor	04/1970 → 12/1988
SCHILTER	
TRACTOR-1300	06/1976 → 03/1980
063523621000 MSN2052 2,4kW 12V	
NISSAN	
TRADE Furgonato-2.0 D	01/1988 → 11/1989
063523623050 MSN2053 2,7kW 12V	
IVECO	
MK-110-13 A	01/1983 → 03/1985
MK-110-13 AH	01/1983 → 03/1985
MK-130-13 A	01/1983 → 03/1985
MK-130-13 AH	01/1983 → 03/1985
MK-75-9 A	01/1983 → 02/1986
MK-75-9 H	01/1983 → 08/1985
MK-80-13 A	01/1983 → 03/1985
MK-80-13 AH	01/1983 → 03/1985
MK-80-13 AT	01/1983 → 03/1985
MK-80-13 AW	01/1983 → 03/1985

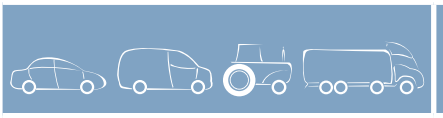


063523623050 MSN2053 2,7kW 12V	
IVECO	
MK-80-9 A	01/1983 → 02/1986
MK-80-9 AH	01/1983 → 02/1986
MK-90-13 A	01/1983 → 03/1985
MK-90-13 AH	01/1983 → 03/1985
063523673030 MSN2054 3,0kW 12V	
MERCEDES-BENZ	
LP-LP 1013	11/1976 → 12/1984
LP-LP 1113	01/1980 → 12/1984
LP-LP 608, LPL 608	09/1973 → 10/1977
LP-LP 709, LPL 709	11/1977 → 12/1984
LP-LP 808, LPL 808	09/1973 → 10/1977
LP-LP 809, LPL 808, LPL 809	11/1977 → 12/1984
LP-LP 813, LPL 813	09/1973 → 12/1984
LP-LP 911 B	09/1973 → 03/1977
LP-LP 913, LPL 913	09/1973 → 12/1984
LP-LPK 1013	11/1976 → 12/1984
LP-LPK 608	09/1973 → 10/1977
LP-LPK 709	11/1977 → 12/1984
LP-LPK 808	09/1973 → 10/1977
LP-LPK 809	11/1977 → 12/1984
LP-LPK 813	09/1973 → 12/1984
LP-LPK 913	09/1973 → 12/1984
LP-LPKF 608	09/1973 → 10/1977
LP-LPKF 709	11/1977 → 12/1984
LP-LPKF 808, LPKF 809	09/1973 → 10/1977
LP-LPKO 608	09/1973 → 07/1977
LP-LPO 608	09/1973 → 10/1977
LP-LPO 709	11/1977 → 12/1984
LP-LPO 808, LPO 809	09/1973 → 10/1977
LP-LPO 811	09/1973 → 12/1984
LP-LPS 608, LPLS 608	09/1973 → 10/1977
LP-LPS 709, LPLS 709	11/1977 → 12/1984
LP-LPS 813, LPLS 813	09/1973 → 12/1984
LP-LPS 911 B	09/1973 → 03/1977
LP-LPS 913	09/1973 → 12/1984
MB-TRAC-900	09/1981 → 12/1991
MB-TRAC-1000	12/1982 → 03/1987
MB-TRAC-1100	01/1981 → 03/1987
MB-TRAC-1500	07/1980 → 03/1987
MB-TRAC-1000, 1100	03/1987 → 12/1991
MB-TRAC-1300 Turbo, 1400 Turbo	03/1987 → 12/1991
MB-TRAC-1600 Turbo	06/1990 → 12/1991
MB-TRAC-65/70, 700, 800	07/1973 → 12/1991
MB-TRAC-700, 800	03/1987 → 12/1991





063523673030 MSN2054 3,0kW 12V

MERCEDES-BENZ	
NG-1013	02/1976 → 12/1984
NG-1017	11/1975 → 02/1991
NG-1213	09/1975 → 05/1986
NG-1413	09/1975 → 12/1984
NG-1417	05/1975 → 12/1984
NG-1013 A	02/1976 → 12/1986
NG-1013 AK	02/1976 → 12/1984
NG-1013 K	02/1976 → 12/1984
NG-1013 KO	02/1976 → 12/1984
NG-1013 S	02/1976 → 12/1984
NG-1017 A	11/1975 → 02/1991
NG-1017 AK	02/1976 → 12/1984
NG-1017 AS	04/1977 → 09/1985
NG-1017 K	02/1976 → 12/1984
NG-1017 KO,1017 F	11/1975 → 12/1984
NG-1017 S,1017 LS	04/1977 → 09/1985
NG-1213 A	09/1975 → 05/1986
NG-1213 AK	09/1975 → 05/1986
NG-1213 AKO	09/1975 → 05/1986
NG-1213 AS	09/1975 → 05/1986
NG-1213 K	09/1975 → 05/1986
NG-1213 KO	09/1975 → 05/1986
NG-1213 S	09/1975 → 05/1986
NG-1217 A	09/1975 → 09/1985
NG-1217 AK	09/1975 → 09/1985
NG-1217 AS	09/1975 → 09/1985
NG-1217 K	09/1975 → 12/1984
NG-1217 KO	09/1975 → 09/1985
NG-1217 S,1217 LS	09/1975 → 09/1985
NG-1217,1217 L	10/1976 → 09/1985
NG-1413 A	09/1975 → 12/1984
NG-1413 AK	09/1975 → 12/1984
NG-1413 AKO	09/1975 → 12/1984
NG-1413 K	09/1975 → 12/1984
NG-1413 KO	09/1975 → 12/1984
NG-1417 A	05/1975 → 12/1984
NG-1417 AK	05/1975 → 12/1984
NG-1417 AKO	05/1975 → 12/1984
NG-1417 K	05/1975 → 12/1984
NG-1417 KO	05/1975 → 12/1984
NG-1613 K	01/1975 → 12/1984
NG-1613 KO	01/1975 → 12/1984
NG-1613,1613 L	01/1975 → 12/1984
NG-1617 AK	01/1975 → 07/1985





063523673030 MSN2054 3,0kW 12V

MERCEDES-BENZ	
NG-1617 K	01/1975 → 07/1985
NG-1617 KO	01/1975 → 07/1985
NG-1617 S	01/1975 → 07/1985
NG-1617,1617 L	01/1975 → 07/1985
O 309-O 309 D	08/1979 → 08/1982
T2/L Cassone / Furgonato / Promiscuo-L 613 D (310.510, 313.424, 313.427, 313.429)	04/1977 → 12/1988
T2/L Pianale piatto/Telaio-L 613 D (313.402, 313.404)	04/1977 → 12/1988
UNIMOG-U 1000	06/1984 → 01/1991
UNIMOG-U 110,U 110L	07/1992 → 09/1995
UNIMOG-U 1200	02/1982 → 01/1991
UNIMOG-U 1200T	01/1983 → 01/1991
UNIMOG-U 1250	12/1984 → 05/1988
UNIMOG-U 1250,U 1250L	01/1988 → 01/1991
UNIMOG-U 1250L	05/1988 → 02/2001
UNIMOG-U 130,U 140	07/1992 → 09/1998
UNIMOG-U 1300	01/1977 → 12/1984
UNIMOG-U 1300,U 1300L	01/1977 → 05/1988
UNIMOG-U 1350L	05/1988 → 02/2001
UNIMOG-U 1400	01/1988 → 04/2000
UNIMOG-U 140L	05/1993 → 09/1998
UNIMOG-U 140T	07/1992 → 09/1995
UNIMOG-U 1450,U 1450L	01/1994 →
UNIMOG-U 1500	01/1977 → 05/1988
UNIMOG-U 1500T	01/1977 → 05/1988
UNIMOG-U 1550	01/1986 → 05/1988
UNIMOG-U 1550 L	02/1986 → 04/2000
UNIMOG-U 1600	01/1988 → 09/2002
UNIMOG-U 1650,U 1650L	01/1988 → 02/2001
UNIMOG-U 1700,U 1700L	05/1978 → 09/1988
UNIMOG-U 1700L	05/1978 → 09/1988
UNIMOG-U 1700T	09/1988 → 02/2001
UNIMOG-U 1750,U 1750L	09/1988 → 02/2001
UNIMOG-U 2100	09/1989 → 02/2001
UNIMOG-U 2100T	09/1989 → 02/2001
UNIMOG-U 2150	05/1991 → 02/2001
UNIMOG-U 2150,U 2150L	05/1991 → 08/2002
UNIMOG-U 2400	05/1991 → 08/2002
UNIMOG-U 2400TG	07/1993 →
UNIMOG-U 2450,U 2450L	07/1993 → 08/2002
UNIMOG-U 2450L	07/1993 → 08/2002
UNIMOG-U 66, U 72	09/1973 → 12/1975




063523680010 MSN2055 4,0kW 24V	
IVECO	
MK-110-13 A	03/1986 → 12/1991
MK-110-13 AH	01/1983 → 12/1985
MK-110-16 A	03/1986 → 12/1991
MK-110-16 AH	03/1986 → 12/1991
MK-130-13 A	03/1986 → 05/1989
MK-130-13 AH	03/1986 → 05/1989
MK-130-16 A	03/1986 → 10/1991
MK-130-16 AH	03/1986 → 10/1991
MK-75-9 A	11/1985 → 05/1989
MK-75-9 H	01/1983 → 08/1985
MK-80-13 A	03/1986 → 12/1991
MK-80-13 AH	03/1986 → 12/1991
MK-80-13 AT	03/1986 → 12/1991
MK-80-13 AW	01/1983 → 12/1991
MK-80-16 A	03/1986 → 12/1991
MK-80-16 AW	03/1986 → 12/1989
MK-90-13 A	03/1986 → 12/1991
MK-90-13 AH	03/1986 → 12/1991
P/PA-Haubenfahrzeuge-120-13 ANW	01/1983 → 09/1990
063523680270 MSN2056 4,0kW 24V	
PERKINS	
GENERIC-Tutte	
063523680820 MSN2057 4,0kW 24V	
IVECO	
EuroCargo-150 E 27, 150 E 27 R	01/1992 → 07/2000
EuroCargo-170 E 27,180 E 27	01/1994 → 07/2000
EuroCargo-260 E 27 KE	09/1991 → 07/2000
EuroCargo-320 E 27	10/1991 → 08/2000
EuroCargo-320 E 27 T	01/1992 → 08/2000
EuroTech MH-MH 190 E 27 K	09/1998 → 07/2000
EuroTech MT-MT 180 E 24	07/1992 → 12/1996
EuroTech MT-MT 180 E 24 K	01/1993 → 12/1996
EuroTech MT-MT 180 E 27	07/1992 → 12/1996
EuroTech MT-MT 180 E 27 K	07/1992 → 12/1996
EuroTech MT-MT 190 E 24	01/1997 → 08/1998
EuroTech MT-MT 190 E 24 K	01/1997 → 08/1998
EuroTech MT-MT 190 E 27	01/1997 → 08/1998
EuroTech MT-MT 190 E 27 K	01/1997 → 08/1998
063523683010 MSN2058 4,0kW 24V	
SCANIA	
94 L-94 L/310	08/1996
063523683090 MSN2059 4,0kW 24V	
MERCEDES-BENZ	
LK/LN2-709	02/1992 → 09/1993

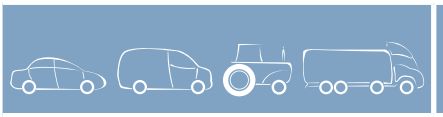


063523683090 MSN2059 4,0kW 24V	
MERCEDES-BENZ	
LK/LN2-809	03/1984 → 12/1998
LK/LN2-811	03/1994 → 12/1998
LK/LN2-914	03/1984 → 12/1998
LK/LN2-1314	07/1984 → 12/1998
LK/LN2-1724	01/1991 → 12/1998
LK/LN2-1114 AK	02/1987 → 12/1998
LK/LN2-1114 K	03/1984 → 12/1998
LK/LN2-1114 S	03/1984 → 12/1998
LK/LN2-1114,1114 L	01/1984 → 12/1998
LK/LN2-1120 AF	02/1987 → 12/1998
LK/LN2-1120 F	02/1990 → 12/1998
LK/LN2-1120 L	08/1984 → 02/1993
LK/LN2-1120 O,1120 LO	02/1992 → 12/1998
LK/LN2-1120 S,1120 LS	06/1984 → 12/1998
LK/LN2-1120,1120 L	06/1984 → 12/1998
LK/LN2-1124 AF	03/1992 → 12/1998
LK/LN2-1124 F	03/1992 → 12/1998
LK/LN2-1217 KO	03/1994 → 12/1998
LK/LN2-1314 AK	06/1987 → 12/1998
LK/LN2-1314 K	07/1984 → 02/1993
LK/LN2-1314 KO	07/1984 → 09/1995
LK/LN2-1317 AK	08/1984 → 12/1998
LK/LN2-1317 AK	12/1992 → 12/1998
LK/LN2-1317 S,1317 LS	08/1984 → 12/1998
LK/LN2-1317,1317 L	08/1984 → 12/1998
LK/LN2-1320 AK	12/1992 → 12/1998
LK/LN2-1320 L	12/1992 → 12/1998
LK/LN2-1320 S,1320 LS	10/1984 → 12/1998
LK/LN2-1320,1320 L	10/1984 → 12/1998
LK/LN2-1324 L	01/1991 → 12/1998
LK/LN2-1324 S,1324 LS	01/1991 → 12/1998
LK/LN2-1324,1324 L	01/1991 → 12/1998
LK/LN2-1514 K	01/1989 → 12/1992
LK/LN2-1514,1514 L	01/1989 → 12/1998
LK/LN2-1517 K	01/1989 → 12/1998
LK/LN2-1517,1517 L	01/1984 → 12/1998
LK/LN2-1520,1520 L	01/1984 → 12/1998
LK/LN2-1524,1524 L	02/1991 → 12/1998
LK/LN2-2020 L	01/1984 → 12/1998
LK/LN2-2024 L	03/1994 → 12/1998
LK/LN2-811 K	03/1994 → 12/1998
LK/LN2-814 F	03/1994 → 12/1998
LK/LN2-814 K	03/1984 → 12/1998
LK/LN2-814 O, 814 LO	01/1984 → 12/1998




063523683090 MSN2059 4,0kW 24V

MERCEDES-BENZ	
LK/LN2-814 S	03/1984 → 12/1998
LK/LN2-814,814L	01/1984 → 12/1998
LK/LN2-817 S,817 LS	01/1986 → 02/1993
LK/LN2-817,817 L	01/1986 → 02/1993
LK/LN2-914 K	03/1984 → 12/1998
LK/LN2-917 KO	03/1994 → 12/1998
LK/LN2-O 1114 ,O 1114 L	01/1984 → 12/1998
LK/LN2-O 814, O 814 L	03/1994 → 12/1998
LP-LP 608, LPL 608	02/1974 → 10/1977
LP-LP 709, LPL 709	11/1977 → 05/1984
LP-LP 808, LPL 808	03/1974 → 10/1977
LP-LP 809, LPL 808, LPL 809	11/1977 → 05/1984
LP-LPK 608	02/1974 → 10/1977
LP-LPK 709	11/1977 → 05/1984
LP-LPK 808	03/1974 → 10/1977
LP-LPK 809	11/1977 → 05/1984
LP-LPKF 608	02/1974 → 10/1977
LP-LPKF 709	11/1977 → 05/1984
LP-LPKF 808, LPKF 809	03/1974 → 10/1977
LP-LPKO 608	02/1974 → 07/1977
LP-LPO 608	02/1974 → 10/1977
LP-LPO 709	11/1977 → 05/1984
LP-LPO 808, LPO 809	03/1974 → 10/1977
LP-LPS 608, LPLS 608	02/1974 → 10/1977
LP-LPS 709, LPLS 709	11/1977 → 05/1984
MK-1417	07/1992 → 09/1994
MK-1424	01/1994 → 09/1994
MK-1224 AF	02/1993 → 09/1996
MK-1224 F	02/1993 → 08/1994
MK-1417 A	01/1994 → 09/1996
MK-1417 AK	07/1992 → 09/1994
MK-1417 K	07/1992 → 09/1994
MK-1420 AK	08/1994 → 09/1994
MK-1420 LS	02/1990 → 06/1993
MK-1420,1420 L	02/1990 → 06/1993
MK-1422 F	03/1993 → 08/1994
MK-1717 AK	09/1989 → 08/1994
MK-1717 K	09/1989 → 08/1994
MK-1717,1717 L	09/1989 → 08/1994
MK-1720 S	02/1990 → 08/1994
MK-1720,1720 L	02/1990 → 08/1993
MK-1722 AK	09/1989 → 08/1993
MK-1722 L	09/1989 → 08/1993
MK-1820 AK	07/1993 → 09/1996




063523683090 MSN2059 4,0kW 24V

MERCEDES-BENZ	
MK-1820 K	05/1992 → 09/1996
MK-1820,1820 L	01/1991 → 09/1996
MK-2320 L	08/1994 → 09/1996
MK-2420,2420 L	03/1990 → 08/1994
NG-1017	11/1975 → 02/1991
NG-1414	03/1987 → 03/1991
NG-1614	03/1987 → 03/1991
NG-1017 A	11/1975 → 02/1991
NG-1017 AF	11/1975 → 05/1984
NG-1017 AS	08/1979 → 05/1984
NG-1017 K	08/1979 → 05/1984
NG-1017 KO,1017 F	11/1975 → 05/1984
NG-1414 K	03/1987 → 03/1991
NG-1417 C	03/1987 → 03/1991
NG-1417 CA	03/1987 → 03/1991
NG-1417 CAK	03/1987 → 03/1991
NG-1417 CK	03/1987 → 03/1991
NG-1419 C,1419 CL	05/1983 → 03/1984
NG-1420 LS	03/1987 → 03/1991
NG-1420,1420 L	03/1987 → 03/1991
NG-1614 K	03/1987 → 03/1991
NG-1617 C,1617 CL	03/1987 → 03/1991
NG-1617 CAK	03/1987 → 03/1991
NG-1617 CK	03/1987 → 03/1991
NG-1617 CS	03/1987 → 03/1991
NG-1619 C,1619 CL	06/1983 → 05/1984
NG-1620,1620 L	03/1987 → 03/1991
NG-2219 C,2219 CL	02/1983 → 05/1984
NG-2220,2220 L	03/1987 → 03/1991
O 301-O 301	03/1986 → 05/1987
O 309-O 309 D	08/1979 → 02/1989
O 402-O 402	02/1986 → 12/1991
T2/L Cassone / Furgonato / Promiscuo-L 408 DG (309.311, 309.312, 309.313, 309.314, 309.315, 309.3..)	02/1974 → 12/1974
T2/L Cassone / Furgonato / Promiscuo-L 508 DG (309.411, 309.412, 309.413, 309.414, 309.415, 309.4..)	01/1970 → 12/1988
T2/L Pianale piatto/Telaio-L 408 DG (309.300, 309.301, 309.302, 309.303)	02/1974 → 12/1974
T2/L Pianale piatto/Telaio-L 508 DG (309.400, 309.401, 309.402, 309.403, 309.404, 309.4..)	01/1970 → 12/1988
T2/L Ribaltabile-LKO 508 DG (309.440, 309.441, 309.442, 309.444, 309.445)	09/1972 → 06/1988




063523683090 MSN2059 4,0kW 24V

MERCEDES-BENZ	
T2/L Veicolo municipale-LKO 508 DG (309.430, 309.431, 309.432, 309.433, 309.435)	02/1974 →
T2/LN1 Cabina con motore-809 DT (670.199)	→
T2/LN1 Cassone / Furgonato / Promiscuo-709 D (669.061, 669.062, 669.063)	04/1986 → 12/1994
T2/LN1 Cassone / Furgonato / Promiscuo-711 D (669.361, 669.362, 669.363)	04/1986 → 12/1994
T2/LN1 Cassone / Furgonato / Promiscuo-714 D (669.361, 669.362, 669.363)	06/1994 → 12/1994
T2/LN1 Cassone / Furgonato / Promiscuo-809 D (670.061, 670.062, 670.063)	04/1986 → 12/1994
T2/LN1 Cassone / Furgonato / Promiscuo-811 D (670.362, 670.363)	04/1986 → 12/1994
T2/LN1 Cassone / Furgonato / Promiscuo-814 D (670.364, 670.365, 670.366)	11/1987 → 12/1994
T2/LN1 Pianale piatto/Telaio-709 D (669.000, 669.001, 669.002, 669.003, 669.041)	04/1986 → 12/1994
T2/LN1 Pianale piatto/Telaio-711 D (669.301, 669.302, 669.303)	04/1986 → 12/1994
T2/LN1 Pianale piatto/Telaio-714 D (669.301, 669.302, 669.303)	06/1994 → 12/1994
T2/LN1 Pianale piatto/Telaio-809 D (670.001, 670.002, 670.003)	04/1986 → 12/1994
T2/LN1 Pianale piatto/Telaio-811 D (670.302, 670.303)	04/1986 → 12/1994
T2/LN1 Ribaltabile-709 DK (669.041, 669.042)	04/1986 → 12/1994
T2/LN1 Ribaltabile-809 DK (670.041, 670.042)	04/1986 → 12/1994
T2/LN1 Ribaltabile-811 DK (670.341, 670.342)	04/1986 → 12/1994
UNIMOG-U 1000	01/1991 → 12/1992
UNIMOG-U 1200	02/1982 → 02/2001
UNIMOG-U 1200T	01/1983 → 02/2001
UNIMOG-U 1250	12/1984 → 05/1988
UNIMOG-U 1250,U 1250L	09/1991 → 02/2001
UNIMOG-U 1450,U 1450L	01/1991 → 04/2000
UNIMOG-U 1550L	05/1988 → 04/2000
UNIMOG-U 1600	01/1991 → 04/2000
UNIMOG-U 1650,U 1650L	09/1989 → 02/2001
UNIMOG-U 1700T	09/1988 → 02/2001
UNIMOG-U 1750,U 1750L	09/1988 → 02/2001

063523803010 MSN2801 1,8kW 12V

OPEL	
ASTRA G 2 volumi /Coda spiovente (F48_, F08_)-2.2 16V	03/2001 → 01/2005
ASTRA G Cabriolet-2.2 16V	03/2001 → 10/2005
ASTRA G Coupe (F07_)-2.2 16V	09/2000 → 05/2005
ASTRA G Station wagon (F35_)-2.2 16V	03/2001 → 07/2004
ASTRA G Tre volumi (F69_)-2.2 16V	03/2001 → 01/2005
SPEEDSTER-2.2	09/2000 →

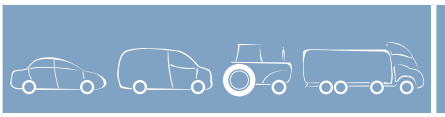


063523803010 MSN2801 1,8kW 12V

OPEL	
VECTRA B (36_)-2.2 i 16V	09/2000 → 04/2002
VECTRA B 2 volumi /Coda spiovente (38_)-2.2 i 16V	09/2000 → 07/2003
VECTRA B Station wagon (31_)-2.2 i 16V	09/2000 → 07/2003
VECTRA C-2.2 16V	04/2002 →
VECTRA C GTS-2.2 16V	08/2002 →
ZAFIRA (F75_)-2.2 16V	09/2000 → 06/2005
VAUXHALL	
ASTRA Mk IV (G)-2.2 16V	03/2001 →
ASTRA Mk IV (G) 2 volumi / Coda spiovente-2.2 16V	03/2001 →
ASTRA Mk IV (G) Cabriolet-2.2 16V	03/2001 →
ASTRA Mk IV (G) Coupe-2.2 16V	03/2000 →
ASTRA Mk IV (G) Station wagon-2.2 16V	03/2001 →
VECTRA (B)-2.2 i 16V	09/2000 → 10/2001
VECTRA (B) 2 volumi / Coda spiovente-2.2 i 16V	09/2000 →
VECTRA (B) Station wagon-2.2 i 16V	09/2000 → 10/2001
VX220-2.2 i	09/2000 →
ZAFIRA Mk I (A)-2.2 16V	09/2000 → 08/2004

063524160020 MSN2060 5,4kW 24V

MAN	
F 2000-19.273 F, FL, FLL	01/1994 → 12/1995
F 2000-19.273 FA	01/1994 → 12/1995
F 2000-19.273 FAK	01/1994 → 12/1995
F 2000-19.273 FK	01/1994 → 12/1995
F 2000-19.273 FS,19.273 FLS	01/1994 → 12/1995
F 2000-19.293 FAC	04/1995 → 10/1996
F 2000-19.293 FAK	04/1995 → 10/1996
F 2000-19.293 FAS	04/1995 → 10/1996
F 2000-19.293 FC,19.293 FLC, 19.293 FLLC	04/1995 → 10/1996
F 2000-19.293 FK,19.293 FLK	04/1995 → 10/1996
F 2000-19.293 FS,19.293 FLS, 19.293 FLLS	04/1995 → 10/1996
F 2000-19.323 FAC	01/1994 → 12/1995
F 2000-19.323 FAK	01/1994 → 12/1995
F 2000-19.323 FAS	01/1994 → 12/1995
F 2000-19.323 FC,19.323 FLC,19.323 FLLC	01/1994 → 12/1995
F 2000-19.323 FK,19.323 FLK	01/1994 → 12/1995
F 2000-19.323 FS,19.323 FLS,19.323 FLLS	01/1994 → 12/1995
F 2000-19.343 FAC	01/1994 → 07/1996
F 2000-19.343 FAK	01/1994 → 07/1996
F 2000-19.343 FAS	01/1994 → 07/1996





063524160020 MSN2060 5,4kW 24V

MAN

F 2000-19.343 FC,19.343 FLC,19.343 FLLC	01/1994 → 07/1996
F 2000-19.343 FK,19.343 FLK	01/1994 → 07/1996
F 2000-19.343 FS,19.343 FLS,19.343 FLLS	01/1994 → 07/1996
F 2000-19.373 FC, FLC, FLLC, FRC, FLRC, F-NL	06/1996 → 07/1996
F 2000-23.293 FNLLC	04/1995 → 07/1996
F 2000-23.343 FNLLC	01/1994 → 07/1996
F 2000-24.273 FNLLC	01/1994 → 12/1995
F 2000-24.293 FNLLC	01/1994 → 07/1996
F 2000-24.323 FNLLC	01/1994 → 12/1995
F 2000-24.343 FNLLC	01/1994 → 07/1996
F 2000-26.273 DFC,26.273 DFLC	01/1994 → 12/1995
F 2000-26.273 DFK,26.273 DFLK	01/1994 → 12/1995
F 2000-26.273 DFS,26.273 DFLS	01/1994 → 12/1995
F 2000-26.273 FNLC,26.273 FNLLC,26.273 FVLC	01/1994 → 12/1995
F 2000-26.273 FNLS,26.273 FVLS	01/1994 → 12/1995
F 2000-26.293 DFC,26.293 DFLC	04/1995 → 07/1996
F 2000-26.293 DFK,26.293 DFLK	04/1995 → 07/1996
F 2000-26.293 DFS,26.293 DFLS	04/1995 → 07/1996
F 2000-26.293 FNLC,26.293 FNLLC,26.293 FVLC	04/1995 → 07/1996
F 2000-26.293 FNLS,26.293 FVLS	04/1995 → 07/1996
F 2000-26.323 DFC,26.323 DFLC	01/1994 → 12/1995
F 2000-26.323 DFK,26.323 DFLK	01/1994 → 12/1995
F 2000-26.323 DFS,26.323 DFLS	01/1994 → 12/1995
F 2000-26.323 FNLC,26.323 FNLLC,26.323 FVLC	01/1994 → 12/1995
F 2000-26.323 FNLS,26.323 FVLS	01/1994 → 12/1995
F 2000-26.343 DFC,26.343 DFLC	01/1994 → 07/1996
F 2000-26.343 DFK,26.343 DFLK	01/1994 → 07/1996
F 2000-26.343 DFS,26.343 DFLS	01/1994 → 07/1996
F 2000-26.343 FNLC,26.343 FNLLC,26.343 FVLC	01/1994 → 07/1996
F 2000-26.343 FNLS,26.343 FVLS	01/1994 → 07/1996
F 2000-27.273 DFAC	01/1994 → 12/1995
F 2000-27.273 DFAK	01/1994 → 12/1995
F 2000-27.273 DFAS	01/1994 → 12/1995
F 2000-27.273 DFC	01/1994 → 12/1995
F 2000-27.273 DFK	01/1994 → 12/1995
F 2000-27.273 DFS	01/1994 → 12/1995
F 2000-27.293 DFC	04/1995 → 07/1996
F 2000-27.293 DFK	04/1995 → 07/1996
F 2000-27.293 DFS	04/1995 → 07/1996





063524160020 MSN2060 5,4kW 24V

MAN

F 2000-27.323 DFAC	01/1994 → 12/1995
F 2000-27.323 DFAK, DFA-KI	01/1994 → 12/1995
F 2000-27.323 DFAS	01/1994 → 12/1995
F 2000-27.323 DFC	01/1994 → 12/1995
F 2000-27.323 DFK, DF-KI	01/1994 → 12/1995
F 2000-27.323 DFS	01/1994 → 12/1995
F 2000-27.343 DFAC	01/1994 → 07/1996
F 2000-27.343 DFAK	01/1994 → 07/1996
F 2000-27.343 DFAS	01/1994 → 07/1996
F 2000-27.343 DFC	01/1994 → 07/1996
F 2000-27.343 DFK	01/1994 → 07/1996
F 2000-27.343 DFS	01/1994 → 07/1996
F 2000-32.343 VFC	08/1995 → 07/1996
F 2000-32.343 VFK	08/1995 → 07/1996
F 2000-33.323 DFAC	01/1994 → 12/1995
F 2000-33.323 DFAK	01/1994 → 12/1995
F 2000-33.323 DFAS	01/1994 → 12/1995
F 2000-33.323 DFC	01/1994 → 12/1995
F 2000-33.323 DFK	01/1994 → 12/1995
F 2000-33.323 DFS	01/1994 → 12/1995
F 2000-33.343 DFAC	01/1994 →
F 2000-33.343 DFAK	01/1994 → 07/1996
F 2000-33.343 DFAS	01/1994 → 07/1996
F 2000-33.343 DFC	01/1994 → 07/1996
F 2000-33.343 DFK	01/1994 → 07/1996
F 2000-33.343 DFS	01/1994 → 07/1996
F 2000-35.343 VFC	08/1995 → 07/1996
F 2000-35.343 VFK	08/1995 → 07/1996
F 2000-41.343 VFC	08/1995 → 07/1996
F 2000-41.343 VFK	08/1995 → 07/1996
F 9-15.192 F, 15.192 FL	01/1983 → 12/1984
F 9-15.192 FS	01/1983 → 12/1984
F 90-19.362 F,19.362 FL,19.362 FLL	07/1986 → 02/1990
F 90-19.362 FA	05/1988 → 02/1990
F 90-19.362 FAK	05/1988 → 02/1990
F 90-19.362 FAS	05/1988 → 02/1990
F 90-19.362 FK	07/1986 → 02/1990
F 90-19.362 FS,19.362 FLS,19.362 FLLS	07/1986 → 02/1990
F 90-24.362 DF	04/1987 → 02/1990
F 90-24.362 DFK	04/1987 → 02/1990
F 90-24.362 DFS,24.362 DFLS	04/1987 → 02/1990
F 90-24.362 FNL,24.362 FNLL,24.362 FVL	10/1986 → 02/1990
F 90-24.362 FNLS,24.362 FVLS	10/1986 → 02/1990
F 90-26.242 DF	01/1988 → 07/1989

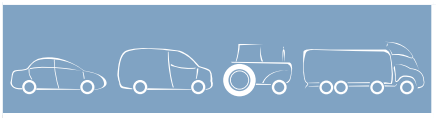


063524160020 MSN2060 5,4kW 24V

MAN	
F 90-26.242 DFAK	02/1989 → 07/1989
F 90-26.242 DFK	01/1988 → 07/1989
F 90-26.242 DFS	01/1988 → 07/1989
F 90-26.322 DF	02/1990 → 06/1996
F 90-26.322 DFA	02/1990 → 12/1992
F 90-26.322 DFAK	02/1990 → 12/1992
F 90-26.322 DFAS	02/1990 → 12/1992
F 90-26.322 DFK	02/1992 → 06/1996
F 90-26.322 DFS,26.322 DFLS	02/1990 → 06/1996
F 90-26.322 FNL,26.322 FNLL	03/1991 → 05/1995
F 90-26.322 FNLS,26.322 FVLS	09/1990 → 12/1995
F 90-26.362 DF,26.362 DFL	09/1987 → 02/1990
F 90-26.362 DFA	05/1988 → 02/1990
F 90-26.362 DFAK	05/1988 → 02/1990
F 90-26.362 DFAS	05/1988 → 02/1990
F 90-26.362 DFK	09/1987 → 02/1990
F 90-26.362 DFS	09/1987 → 02/1990
F 90-33.362 DF	09/1987 → 02/1990
F 90-33.362 DFA	05/1988 → 02/1990
F 90-33.362 DFAK	05/1988 → 02/1990
F 90-33.362 DFAS	05/1988 → 02/1990
F 90-33.362 DFK	09/1987 → 02/1990
F 90-33.362 DFS	09/1987 → 02/1990
F 90 Unterflur-19.362 U,19.362 ULL	07/1986 → 01/1991
F 90 Unterflur-24.362 UNL,24.362 UNLL	10/1986 → 02/1990
F 90 Unterflur-26.322 UNL,26.322 UNLL	09/1990 → 05/1994
LION S COACH-FRH 352,RH 353	09/1995 → 10/1996
LION S COACH-FRH 402,RH 403	09/1995 → 10/1996
LION S STAR-FRH 402,RH 403	09/1995 → 10/1996
MERCEDES-BENZ	
AXOR 2-3335	10/2004 →
AXOR 2-3340	10/2004 →
AXOR 2-3343	10/2004 →
AXOR 2-3340 K	10/2004 →
AXOR 2-3343 B	10/2004 →
MK-1222	07/1989 → 08/1994
MK-1422	02/1993 → 08/1994
MK-1427	02/1993 → 09/1996
MK-1431	12/1987 → 08/1996
MK-1722	12/1988 → 08/1994
MK-1729	12/1987 → 08/1994
MK-1824	08/1992 → 09/1996
MK-1926	12/1987 → 09/1996
MK-2422	09/1989 → 08/1994

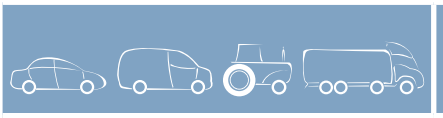


063524160020 MSN2060 5,4kW 24V

MERCEDES-BENZ	
MK-2426	01/1990 → 08/1994
MK-2431	12/1987 → 09/1996
MK-2524	01/1994 → 09/1996
MK-2527	10/1993 → 09/1996
MK-1222 A, 1222 LA	09/1989 → 07/1994
MK-1222 AF	09/1989 → 09/1993
MK-1222 F	07/1989 → 08/1994
MK-1222 S, 1222 LS	07/1989 → 08/1994
MK-1224 AF	02/1993 → 09/1996
MK-1226 AF	02/1990 → 09/1996
MK-1227 A	01/1992 → 07/1992
MK-1234 AF	01/1992 → 09/1996
MK-1422 F	07/1989 → 08/1994
MK-1422 LS	02/1993 → 08/1994
MK-1422 S,1422 LS	06/1989 → 08/1994
MK-1422,1422 L	06/1989 → 08/1994
MK-1424 S,1424 LS	02/1993 → 09/1996
MK-1424,1424 L	02/1993 → 09/1996
MK-1426 S,1426 LS	06/1989 → 09/1993
MK-1427 F	02/1993 → 09/1996
MK-1427 L	02/1993 → 09/1996
MK-1427 LS	02/1993 → 09/1996
MK-1427 S, 1427 LS	02/1993 → 09/1996
MK-1431 F	02/1993 → 08/1994
MK-1624 S	02/1993 → 08/1996
MK-1720 L	12/1988 → 08/1994
MK-1722 AK	12/1988 → 08/1994
MK-1722 K	12/1988 → 08/1994
MK-1722 S	12/1988 → 08/1994
MK-1722, 1722 L, 1722 LL	12/1988 → 08/1994
MK-1726 AK	06/1989 → 08/1994
MK-1726 K	12/1988 → 08/1994
MK-1726 L, 1726 LL	12/1988 → 08/1994
MK-1726 LL	12/1988 → 08/1994
MK-1726 S,1726 LS	12/1988 → 08/1994
MK-1726,1726 L, 1726 LL	12/1988 → 08/1994
MK-1727 L	12/1988 → 08/1994
MK-1729 LS	12/1987 → 08/1994
MK-1733 S,1733 LS	01/1989 → 07/1992
MK-1733,1733 L, 1734 L	01/1989 → 09/1996
MK-1824 AK	08/1992 → 09/1996
MK-1824 K	08/1992 → 09/1996
MK-1824,1824 L	01/1994 → 09/1996
MK-1827 AK	08/1992 → 09/1996





063524160020 MSN2060 5,4kW 24V

MERCEDES-BENZ	
MK-1827 K	01/1994 → 09/1996
MK-1827 S,1827 LS	12/1990 → 09/1996
MK-1827,1827 L	12/1990 → 09/1996
MK-1831 K	12/1990 → 08/1994
MK-1831 S,1831 LS	12/1990 → 09/1996
MK-1831,1831 L	12/1990 → 09/1996
MK-1834 S,1834 LS	01/1991 → 09/1996
MK-1834,1834 L	01/1991 → 09/1996
MK-2327 L	02/1993 → 09/1996
MK-2422 , 2422 L	09/1989 → 08/1994
MK-2422 B	09/1989 → 08/1994
MK-2422 K	09/1989 → 08/1994
MK-2422 L	09/1989 → 08/1994
MK-2422,2422 L	09/1989 → 08/1994
MK-2426 B	02/1990 → 08/1994
MK-2426 L	01/1990 → 08/1994
MK-2426, 2426 L	02/1990 → 08/1994
MK-2427 B	07/1992 → 08/1994
MK-2427 L	07/1992 → 09/1996
MK-2433 K	09/1989 → 07/1992
MK-2433 L	05/1989 → 07/1992
MK-2433 S	09/1989 → 07/1992
MK-2433 S,2433 LS	05/1989 → 07/1992
MK-2433,2433 L, 2434 L	05/1989 → 09/1996
MK-2524 K	01/1994 → 09/1996
MK-2524 L	01/1994 → 09/1996
MK-2524,2524 L	01/1994 → 09/1996
MK-2527 B	01/1994 → 09/1996
MK-2527 K	10/1993 → 09/1996
MK-2527 L	03/1991 → 09/1996
MK-2531 B	12/1990 → 09/1996
MK-2531 L	12/1990 → 09/1996
MK-2531,2531 L	12/1990 → 09/1996
MK-2534 K	01/1991 → 09/1996
MK-2534 L	01/1994 → 09/1996
MK-2534 S,2534 LS	01/1994 → 09/1996
MK-2534,2534 L	01/1991 → 09/1996
MK-3231 L	12/1990 → 08/1996
NG-1219	03/1977 → 09/1984
NG-1222	07/1982 → 02/1990
NG-1644	06/1986 → 08/1989
NG-1719	03/1977 → 08/1982
NG-1919	03/1977 → 08/1982
NG-1922	10/1981 → 10/1990





063524160020 MSN2060 5,4kW 24V

MERCEDES-BENZ	
NG-1926	03/1977 → 12/1980
NG-1935	02/1986 → 09/1989
NG-1944	10/1985 → 12/1989
NG-2219	03/1977 → 01/1987
NG-2222	05/1982 → 03/1991
NG-2224	03/1977 → 12/1982
NG-2225	04/1985 → 03/1991
NG-2226	03/1977 → 12/1980
NG-2228	12/1979 → 03/1991
NG-2422	05/1986 → 06/1989
NG-2433	10/1980 → 09/1996
NG-2438	08/1973 → 09/1996
NG-2626	03/1977 → 03/1981
NG-2628	02/1980 → 03/1991
NG-2635	04/1986 → 03/1991
NG-2644	10/1985 → 02/1990
NG-3028	02/1980 → 03/1991
NG-3033	05/1982 → 05/1987
NG-3235	07/1988 → 08/1994
NG-3328	02/1980 → 03/1991
NG-3333	12/1982 → 11/1991
NG-3338	01/1981 → 12/1986
NG-3528	07/1982 → 07/1987
NG-3544	09/1987 → 03/1992
NG-1219 A	03/1977 → 12/1982
NG-1219 AF	03/1977 → 09/1984
NG-1219 AK	03/1977 → 12/1982
NG-1219 F	03/1977 → 09/1984
NG-1219 K	03/1977 → 09/1984
NG-1219 S	03/1977 → 09/1984
NG-1222 A	05/1982 → 10/1990
NG-1222 AF	05/1982 → 12/1991
NG-1222 F	05/1982 → 12/1991
NG-1222 S	07/1982 → 02/1990
NG-1419 AK	03/1977 → 12/1982
NG-1419 AS	03/1977 → 12/1982
NG-1419 F	03/1977 → 12/1982
NG-1419 K	03/1977 → 12/1982
NG-1419 S,1419 LS	03/1977 → 12/1982
NG-1419,1419 L	03/1977 → 01/1987
NG-1422 F	05/1982 → 10/1990
NG-1422 S, 1422 LS	05/1982 → 10/1990
NG-1422,1422 L	05/1982 → 10/1990
NG-1424 F	03/1977 → 01/1987

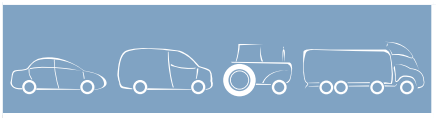


063524160020 MSN2060 5,4kW 24V

MERCEDES-BENZ

NG-1424 K	03/1977 → 01/1987
NG-1424 S,1424 LS	03/1977 → 01/1987
NG-1424,1424 L	03/1977 → 01/1987
NG-1425 S,1425 LS	11/1982 → 03/1991
NG-1428 F	05/1982 → 12/1991
NG-1428AF	08/1973 → 09/1996
NG-1619 AK	03/1977 → 12/1982
NG-1619 K	03/1977 → 12/1982
NG-1619 KO	03/1977 → 01/1987
NG-1619 S	03/1977 → 12/1982
NG-1619,1619 L	02/1977 → 05/1987
NG-1622 AK	05/1982 → 10/1989
NG-1622 K	05/1982 → 10/1989
NG-1622 S	05/1982 → 03/1991
NG-1622,1622 L	08/1973 → 09/1996
NG-1624 K	03/1977 → 08/1982
NG-1624 S,1624 LS	03/1977 → 12/1982
NG-1624,1624 L	02/1977 → 01/1987
NG-1625 AK	10/1980 → 11/1989
NG-1625 K	05/1980 → 11/1989
NG-1625 S,1625 LS	08/1973 → 09/1996
NG-1625,1625 L	08/1973 → 09/1996
NG-1626 AK	03/1977 → 12/1980
NG-1626 AS	03/1977 → 12/1980
NG-1626 K	03/1977 → 12/1980
NG-1626 S,1626 LS	03/1977 → 12/1980
NG-1626,1626 L	03/1977 → 12/1980
NG-1628 A	01/1980 → 05/1989
NG-1628 S,1628 LS	08/1973 → 09/1996
NG-1628,1628 L	08/1973 → 09/1996
NG-1635 K	02/1986 → 07/1989
NG-1635 S,1635 LS	02/1986 → 07/1989
NG-1635,1635 L	02/1986 → 07/1989
NG-1644 S,1644 LS	06/1986 → 08/1989
NG-1719 AK	03/1977 → 08/1982
NG-1719 K	03/1977 → 08/1982
NG-1719 S	03/1977 → 08/1982
NG-1919 AK	03/1977 → 08/1982
NG-1919 K	03/1977 → 08/1982
NG-1919 S	03/1977 → 08/1982
NG-1922 AK	10/1981 → 03/1991
NG-1922 K	10/1981 → 03/1991
NG-1922 S	10/1981 → 03/1991
NG-1926 A	03/1977 → 12/1980

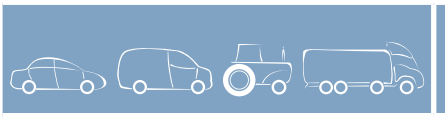


063524160020 MSN2060 5,4kW 24V

MERCEDES-BENZ

NG-1926 AK	03/1977 → 12/1980
NG-1926 AS	03/1977 → 12/1980
NG-1926 K	03/1977 → 12/1980
NG-1926 S,1926 LS	03/1977 → 12/1980
NG-1928 A	01/1980 → 03/1991
NG-1928 AK	01/1980 → 03/1991
NG-1928 AS	01/1980 → 03/1991
NG-1928 K	01/1980 → 03/1991
NG-1928 S,1928 LS	08/1973 → 09/1996
NG-1928,1928 L	08/1973 → 09/1996
NG-1935 AK	09/1987 → 03/1991
NG-1935 AS	09/1987 → 03/1991
NG-1935 S,1935 LS	02/1986 → 09/1989
NG-1944 S,1944 LS	10/1985 → 12/1989
NG-2025 S	08/1983 → 03/1991
NG-2026 S	03/1977 → 10/1980
NG-2028 A	01/1980 → 06/1989
NG-2028 LS	01/1980 → 06/1989
NG-2035 S,2035 LS	06/1986 → 07/1989
NG-2219 K	03/1977 → 01/1987
NG-2219 KO	03/1977 → 01/1987
NG-2219,2219 L	03/1977 → 01/1987
NG-2222 B	05/1982 → 03/1991
NG-2222 K	05/1982 → 03/1991
NG-2222 L	08/1973 → 09/1996
NG-2222,2222 L	08/1973 → 09/1996
NG-2224 B	03/1977 → 03/1984
NG-2224 K	03/1977 → 12/1982
NG-2224 S	03/1977 → 12/1982
NG-2225 B	08/1983 → 03/1991
NG-2225 L	04/1985 → 03/1991
NG-2226 S,2226 LS	03/1977 → 12/1980
NG-2226,2226 L	03/1977 → 12/1980
NG-2228 S	12/1979 → 03/1991
NG-2228,2228 L	08/1973 → 09/1996
NG-2235 K	03/1986 → 07/1989
NG-2235 S, 2235 LS	03/1986 → 07/1989
NG-2235,2235 L	03/1986 → 07/1989
NG-2238,2238 L	08/1973 → 09/1996
NG-2244 S	10/1985 → 07/1989
NG-2244,2244 L	10/1985 → 07/1989
NG-2422 K	05/1986 → 06/1989
NG-2438 L	11/1980 → 06/1990
NG-2444 LS	10/1985 → 08/1996





063524160020 MSN2060 5,4kW 24V

MERCEDES-BENZ	
NG-2528 A	01/1986 → 03/1991
NG-2528 AK	01/1986 → 03/1991
NG-2626 A	03/1977 → 03/1981
NG-2626 AB	03/1977 → 12/1980
NG-2626 AK	03/1977 → 12/1981
NG-2626 AS	03/1977 → 03/1981
NG-2626 B	03/1977 → 12/1980
NG-2626 K	03/1977 → 03/1981
NG-2626 S	03/1977 → 03/1981
NG-2628 A	02/1980 → 03/1991
NG-2628 AK	02/1980 → 03/1991
NG-2628 AS	02/1980 → 03/1991
NG-2628 B	02/1980 → 08/1989
NG-2628 K	02/1980 → 03/1991
NG-2628 S	02/1980 → 03/1991
NG-2635 A	09/1987 → 03/1991
NG-2635 AK	09/1987 → 03/1991
NG-2635 AS	09/1987 → 03/1991
NG-2635 S	04/1986 → 03/1991
NG-2644 S	10/1985 → 02/1990
NG-3025 B	12/1985 → 07/1987
NG-3025 K	12/1985 → 07/1987
NG-3028 B	12/1985 → 07/1987
NG-3028 K	12/1985 → 07/1987
NG-3228 B	07/1987 → 03/1991
NG-3228 K	07/1987 → 03/1991
NG-3328 B	02/1980 → 03/1991
NG-3328 K	07/1982 → 07/1987
NG-3333 B	12/1982 → 11/1991
NG-3333 K	12/1982 → 11/1991
NG-3528 B	07/1987 → 09/1989
NG-3528 K	07/1982 → 09/1989
NG-3535 AK	09/1987 → 02/1990
NG-3535 K	09/1987 → 01/1989
NG-3544 S	09/1987 → 03/1992
O 303-O 303	01/1980 → 09/1992
O 307-O 307	11/1976 → 08/1987
O 404-O 404	09/1991 → 10/1999
SK-1922	05/1989 → 08/1994
SK-1935	05/1989 → 08/1994
SK-1948	09/1988 → 07/1992
SK-2024	02/1993 → 08/1996
SK-2031	03/1992 → 09/1996
SK-2038	11/1991 → 08/1996





063524160020 MSN2060 5,4kW 24V

MERCEDES-BENZ	
SK-2044	01/1992 → 08/1996
SK-2050	01/1991 → 09/1996
SK-2429	07/1988 → 08/1994
SK-2435	07/1988 → 08/1994
SK-2448	07/1988 → 07/1992
SK-2531	05/1991 → 09/1996
SK-2538	03/1991 → 08/1996
SK-2544	01/1994 → 08/1996
SK-2550	01/1991 → 08/1996
SK-2629	07/1988 → 08/1994
SK-2631	06/1992 → 08/1996
SK-2634	01/1994 → 08/1996
SK-2635	07/1988 → 08/1994
SK-2650	01/1996 → 09/1996
SK-3229	09/1989 → 08/1994
SK-3235	10/1988 → 07/1992
SK-3238	10/1990 → 09/1996
SK-3244	01/1994 → 09/1996
SK-3248	07/1987 → 09/1996
SK-3535	10/1988 → 08/1994
SK-3538	03/1991 → 09/1996
SK-3544	07/1992 → 09/1996
SK-3548	05/1992 → 07/1992
SK-4844	07/1992 → 08/1994
SK-1728, 1729, 1729 L	07/1988 → 08/1994
SK-1729 AK	07/1988 → 09/1993
SK-1729 K	07/1988 → 08/1994
SK-1729 S,1729 LS	07/1988 → 08/1994
SK-1735 AK	08/1989 → 08/1994
SK-1735 K	07/1988 → 08/1994
SK-1735 L	07/1988 → 08/1994
SK-1735 S,1735 LS	07/1988 → 08/1994
SK-1735,1735 L	07/1988 → 08/1994
SK-1748 S,1748 LS	07/1988 → 07/1992
SK-1748,1748 L	07/1988 → 07/1992
SK-1831 AK	05/1991 → 08/1996
SK-1831 K	07/1992 → 08/1996
SK-1831 S,1831 LS	07/1992 → 08/1996
SK-1831,1831 L	07/1992 → 08/1996
SK-1834 S,1834 LS	10/1993 → 08/1996
SK-1834,1834 L	10/1993 → 08/1996
SK-1838 AK	12/1992 → 08/1996
SK-1838 K	12/1990 → 09/1996
SK-1838 S,1838 LS	12/1990 → 09/1996




063524160020 MSN2060 5,4kW 24V

MERCEDES-BENZ

SK-1838,1838 L	12/1990 → 09/1996
SK-1840 LS	07/1991 → 07/1992
SK-1844 S,1844 LS	11/1991 → 08/1996
SK-1844,1844 L	11/1991 → 08/1996
SK-1850 LAS	12/1990 → 09/1996
SK-1850 S,1850 LS	12/1990 → 09/1996
SK-1850,1850 L	12/1990 → 09/1996
SK-1853 AK	01/1996 → 08/1996
SK-1853 S,1853 LS	01/1996 → 08/1996
SK-1853,1853 L	01/1996 → 08/1996
SK-1922 AK	08/1989 → 08/1994
SK-1922 K	05/1989 → 08/1994
SK-1922 S	05/1989 → 08/1994
SK-1929 A	07/1988 → 08/1994
SK-1929 AK	07/1988 → 08/1994
SK-1929 AS	07/1988 → 08/1994
SK-1929 K	07/1988 → 08/1994
SK-1929 S	07/1988 → 08/1994
SK-1929,1929 L	07/1988 → 08/1994
SK-1935 AK	05/1989 → 08/1994
SK-1935 AS	05/1989 → 08/1994
SK-1935 K	05/1989 → 08/1994
SK-1935 S	05/1989 → 08/1994
SK-2024 AK	02/1993 → 08/1996
SK-2024 K	02/1993 → 08/1996
SK-2027 AK	02/1993 → 08/1996
SK-2031 A	03/1992 → 08/1996
SK-2031 AS	03/1992 → 08/1996
SK-2031 K	03/1992 → 09/1996
SK-2031 S	03/1992 → 09/1996
SK-2038 AS	12/1992 → 08/1996
SK-2038 S	11/1991 → 08/1996
SK-2044 AS	01/1994 → 08/1996
SK-2044 S	01/1992 → 08/1996
SK-2050 S	01/1991 → 09/1996
SK-2055 AF	01/1992 → 09/1996
SK-2422 L	07/1987 → 06/1989
SK-2429 K	07/1988 → 08/1994
SK-2429 S	07/1988 → 08/1994
SK-2429 S,2429 LS	07/1988 → 08/1994
SK-2429,2429 L	07/1988 → 08/1994
SK-2434 L	01/1991 → 09/1996
SK-2435 K	07/1988 → 08/1994
SK-2435 LS	07/1988 → 08/1994

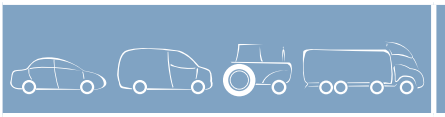


063524160020 MSN2060 5,4kW 24V

MERCEDES-BENZ

SK-2435 S	07/1988 → 08/1994
SK-2435 S,2435 LS	07/1988 → 08/1994
SK-2435,2435 L	07/1988 → 08/1994
SK-2448 LS	07/1988 → 07/1992
SK-2448 S	07/1988 → 07/1992
SK-2448,2448 L	07/1988 → 07/1992
SK-2531, 2531 L	03/1991 → 09/1996
SK-2538 K, 2538 LK	03/1991 → 08/1996
SK-2538 S	03/1991 → 08/1996
SK-2538 S,2538 LS	03/1991 → 08/1996
SK-2538,2538 L	03/1991 → 08/1996
SK-2544 LS	01/1994 → 08/1996
SK-2544 S	01/1992 → 08/1996
SK-2544,2544 L	01/1992 → 08/1996
SK-2550 K	07/1991 → 08/1996
SK-2550 S, 2550 LS	01/1991 → 08/1996
SK-2550,2550 L	01/1991 → 08/1996
SK-2553 S, 2553 LS	01/1996 → 08/1996
SK-2553,2553 L	01/1996 → 08/1996
SK-2629 A	07/1988 → 08/1994
SK-2629 AK	07/1988 → 08/1994
SK-2629 AS	07/1988 → 08/1994
SK-2629 B	07/1988 → 08/1994
SK-2629 K	07/1988 → 08/1994
SK-2629 S	07/1988 → 08/1994
SK-2631 A	06/1992 → 08/1996
SK-2631 AK, 2634 AK	06/1992 → 08/1996
SK-2631 AS	06/1992 → 08/1996
SK-2631 B	06/1992 → 08/1996
SK-2631 K	06/1992 → 08/1994
SK-2631 S	06/1992 → 08/1996
SK-2634 S	01/1994 → 08/1996
SK-2635 A	02/1990 → 08/1994
SK-2635 AK	02/1990 → 08/1994
SK-2635 AS	02/1990 → 08/1994
SK-2635 K	01/1991 → 08/1994
SK-2635 S	07/1988 → 08/1994
SK-2638 A	09/1991 → 09/1996
SK-2638 AK	07/1992 → 09/1996
SK-2638 AS	07/1992 → 09/1996
SK-2638 K	09/1991 → 09/1996
SK-2638 S	09/1991 → 09/1996
SK-2638, 2638 L	09/1991 → 09/1996
SK-2644 A	01/1992 → 09/1996




063524160020 MSN2060 5,4kW 24V

MERCEDES-BENZ	
SK-2644 S	01/1992 → 09/1996
SK-2644, 2644 L	01/1992 → 09/1996
SK-2648 AK	02/1990 → 07/1992
SK-2648 S	12/1988 → 07/1992
SK-2650 A	07/1992 → 09/1996
SK-2650 AK	07/1992 → 08/1994
SK-2650 AS	01/1994 → 09/1996
SK-2650 K	07/1992 → 08/1994
SK-2650 S	07/1992 → 09/1996
SK-2650, 2650 L	07/1992 → 09/1996
SK-2653 AK	01/1996 → 09/1996
SK-3053 S	12/1993 → 09/1996
SK-3229 B	09/1989 → 07/1992
SK-3229 K	09/1989 → 01/1992
SK-3233 B	10/1990 → 07/1992
SK-3233 K	10/1990 → 07/1992
SK-3234 B	02/1992 → 09/1996
SK-3234 K	02/1992 → 09/1996
SK-3235 K	07/1987 → 07/1992
SK-3235 L	07/1988 → 08/1994
SK-3238 L	10/1990 → 09/1996
SK-3238, 3238 L	10/1990 → 09/1996
SK-3244 L	10/1990 → 09/1996
SK-3250 L	10/1990 → 09/1996
SK-3253, 3253 L	01/1996 → 09/1996
SK-3534 K	10/1993 → 09/1996
SK-3535 AK	02/1990 → 08/1994
SK-3535 B	10/1988 → 08/1994
SK-3535 K	10/1988 → 08/1994
SK-3538 AK	03/1991 → 09/1996
SK-3538 K	03/1991 → 09/1996
SK-3544 AK	07/1992 → 09/1996
SK-3544 K	07/1992 → 09/1996
SK-3550 K	05/1992 → 09/1996
SK-3550 S	05/1992 → 09/1996
SK-3550 S, 3553 S	05/1992 → 09/1996
SK-3553 S	01/1996 → 09/1996
SK-3553, 3553 L	01/1996 → 09/1996
SK-4844 K	07/1992 → 09/1996
TOURISMO (O 350)-Tourismo	10/1995 → 09/2006
SETRA	
Series 300-S 315 HD, S 315 HDH	03/1995 → 07/2001
Series 300-S 317 HD, S 317 HDH	03/1995 → 07/2001
Series 300-S 328 DT	03/1995 → 02/2002




063524160110 MSN2061 5,5kW 24V

IVECO	
EuroTech MP-400 E 38 T, 440 E 38 T, 440 E 38 T /P	09/1992 → 11/2000
EuroTech MP-MP 180 E 38	09/1992 → 12/1993
EuroTech MP-MP 240 E 38	09/1992 → 11/2000
EuroTech MP-MP 400 E 38 TXP	11/1993 → 12/1996
M-165-24 R	12/1982 → 09/1986
M-165-24 T	12/1982 → 09/1986
M-175-24	09/1986 → 07/1992
M-175-24 T	09/1986 → 07/1992
TurboTech-190-26	01/1990 → 12/1992
TurboTech-190-26 T	01/1990 → 12/1992
TurboTech-190-32	01/1990 → 12/1992
TurboTech-190-32 T	01/1990 → 12/1992

063524160460 MSN2062 5,4kW 24V

IVECO	
EuroCargo-150 E 27, 150 E 27 R	01/1992 → 07/2000
EuroCargo-170 E 27,180 E 27	01/1994 → 07/2000
EuroCargo-260 E 27 KE	09/1991 → 07/2000
EuroCargo-320 E 27	10/1991 → 08/2000
EuroCargo-320 E 27 T	01/1992 → 08/2000
EuroTech MT-MT 180 E 24	07/1992 → 12/1996
EuroTech MT-MT 180 E 24 K	01/1993 → 12/1996
EuroTech MT-MT 180 E 27	07/1992 → 12/1996
EuroTech MT-MT 180 E 27 K	07/1992 → 12/1996
EuroTech MT-MT 190 E 24	01/1997 → 08/1998
EuroTech MT-MT 190 E 24 K	01/1997 → 08/1998
EuroTech MT-MT 190 E 27	01/1997 → 08/1998
EuroTech MT-MT 190 E 27 K	01/1997 → 08/1998

063524160520 MSN2063 5,4kW 24V

IVECO	
EuroStar-LD 190 E 38 P	01/1993 → 07/2000
EuroStar-LD 240 E 38	01/1993 → 11/2000
EuroStar-LD 260 E 38 P	01/1993 → 09/1995
EuroStar-LD 400 E 38 TXP,LD 440 E 38 TXP	01/1993 → 11/2000
EuroStar-LD 440 E 38 T	04/1993 → 11/2000
EuroStar-LD 440 E 38 TZ	04/1993 → 11/2000
EuroTech MP-400 E 38 T, 440 E 38 T, 440 E 38 T /P	09/1992 → 11/2000
EuroTech MP-MP 180 E 34	04/1992 → 12/1993
EuroTech MP-MP 180 E 38	09/1992 → 12/1993
EuroTech MP-MP 190 E 34	01/1993 → 07/2000
EuroTech MP-MP 190 E 38	01/1993 → 07/2000
EuroTech MP-MP 240 E 30 PS	01/1997 → 12/2002
EuroTech MP-MP 240 E 34	09/1995 → 12/1996




063524160520 MSN2063 5,4kW 24V

IVECO	
EuroTech MP-MP 240 E 38	01/1992 → 07/2000
EuroTech MP-MP 260 E 38 P	01/1994 → 07/2000
EuroTech MP-MP 400 E 34 T,MP 440 E 34 T	04/1992 → 12/2000
EuroTech MP-MP 400 E 38 TXP	11/1993 → 12/1996
EuroTech MP-MP 440 E 38 TZ	04/1993 → 11/2000
EuroTech MT-MT 180 E 30 R	07/1992 → 12/1996
EuroTech MT-MT 180 E 34 R	04/1992 → 12/1993
EuroTech MT-MT 190 E 30	01/1997 → 08/1998
EuroTech MT-MT 190 E 30 K	01/1997 → 08/1998
EuroTech MT-MT 400 E 30 T	04/1992 → 08/1998
EuroTech MT-MT 400 E 34 T	04/1992 → 08/1998
EuroTrakker-MP 180 E 25 W	05/1999 → 11/2000
EuroTrakker-MP 190 E 30 H	01/1993 → 07/2000
EuroTrakker-MP 190 E 30 W	01/1993 → 07/2000
EuroTrakker-MP 190 E 34 H	01/1993 → 07/2000
EuroTrakker-MP 190 E 34 W	01/1993 → 07/2000
EuroTrakker-MP 260 E 30 H	01/1993 → 07/2000
EuroTrakker-MP 260 E 30 W	11/1999 → 07/2000
EuroTrakker-MP 260 E 34 H	01/1993 → 07/2000
EuroTrakker-MP 260 E 34 W	01/1993 → 07/2000
EuroTrakker-MP 340 E 34 H	01/1993 → 07/2000
EuroTrakker-MP 380 E 34 H	01/1993 → 07/2000
EuroTrakker-MP 380 E 34 W	11/1999 → 07/2000
EuroTrakker-MP 400 E 34 HT	01/1993 → 12/2000
EuroTrakker-MP 440 E 34 HT	01/1993 → 07/2000

063524160780 MSN2064 5,4kW 24V

MAN	
E 2000-19.310 FALK	05/2000 → 06/2003
E 2000-19.310 FALS	05/2000 → 06/2003
E 2000-19.310 FLK	05/2000 → 06/2003
E 2000-19.310 FLS	05/2000 → 06/2003
E 2000-19.360 FALK	07/2001 → 06/2003
E 2000-19.360 FALS	07/2001 → 06/2003
E 2000-19.360 FLK	07/2001 → 06/2003
E 2000-19.360 FLS	07/2001 → 06/2003
E 2000-19.410 FALK	07/2001 → 06/2003
E 2000-19.410 FALS	07/2001 → 06/2003
E 2000-19.410 FLK	07/2001 → 06/2003
E 2000-19.410 FLS	07/2001 → 06/2003
E 2000-19.460 FALK	07/2001 → 06/2003
E 2000-19.460 FALS	07/2001 → 06/2003
E 2000-19.460 FLK	07/2001 → 06/2003
E 2000-19.460 FLS	07/2001 → 06/2003
E 2000-26.360 FAVLC	05/2000 → 10/2003

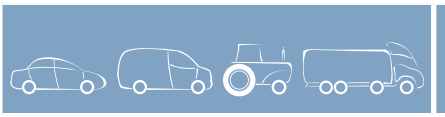


063524160780 MSN2064 5,4kW 24V

MAN	
E 2000-26.360 FAVLK	05/2000 → 10/2003
E 2000-26.410 DFARC	05/2000 → 10/2003
E 2000-26.410 DFRC, FAVLC	05/2000 → 10/2003
E 2000-26.410 FAVLK	05/2000 → 10/2003
E 2000-26.460 DFARC	05/2000 → 10/2003
E 2000-26.460 DFLRS	05/2000 → 10/2003
E 2000-26.460 FAVLC	05/2000 → 10/2003
E 2000-26.460 FAVLK	05/2000 → 10/2003
E 2000-28.310 FNLC	09/2002 → 12/2003
E 2000-28.360 FANLC	05/2000 → 11/2003
E 2000-28.360 FANLK	05/2000 → 11/2003
E 2000-28.360 FNALC	05/2000 → 11/2003
E 2000-28.360 FNLC	05/2000 → 11/2003
E 2000-28.410 FANLC	05/2000 → 11/2003
E 2000-28.410 FANLK	05/2000 → 11/2003
E 2000-28.410 FNLC	05/2000 → 11/2003
E 2000-28.460 FANLC	05/2000 → 11/2003
E 2000-28.460 FANLK	05/2000 → 11/2003
E 2000-28.460 FNLC	05/2000 → 11/2003
E 2000-30.310 FNLC	05/2000 → 06/2002
E 2000-30.360 FANLC	05/2000 → 06/2003
E 2000-30.360 FANLK	05/2000 → 06/2003
E 2000-30.360 FNLC	05/2000 → 06/2003
E 2000-30.410 FANLC	05/2000 → 06/2003
E 2000-30.410 FANLK	05/2000 → 06/2003
E 2000-30.410 FNLC	05/2000 → 06/2003
E 2000-30.460 FANLC	05/2000 → 06/2003
E 2000-30.460 FANLK	05/2000 → 06/2003
E 2000-30.460 FNLC	05/2000 → 06/2003
E 2000-32.310 VFLC	05/2000 → 08/2002
E 2000-32.310 VFNLC	05/2000 → 08/2002
E 2000-32.360 VFLC	05/2000 → 10/2003
E 2000-32.360 VFNLC	05/2000 → 10/2003
E 2000-32.410 VFARK	05/2000 → 10/2003
E 2000-32.410 VFLC,VFRC, VFLRC	05/2000 → 10/2003
E 2000-32.410 VFNLC	05/2000 → 10/2003
E 2000-32.460 VFLC, VFLRC	05/2000 → 10/2003
E 2000-32.460 VFNLC	05/2000 → 10/2003
E 2000-33.360 DFAK, DFALK	05/2000 → 06/2003
E 2000-33.360 DFALC	05/2000 → 06/2003
E 2000-33.360 DFALS	04/2001 → 06/2003
E 2000-33.360 DFLC	05/2000 → 06/2003
E 2000-33.360 DFLK	05/2000 → 06/2003
E 2000-33.360 DFLS	05/2000 → 06/2003





063524160780 MSN2064 5,4kW 24V

MAN	
E 2000-33.410 DFAK, DFALK	05/2000 → 06/2003
E 2000-33.410 DFALC	05/2000 → 06/2003
E 2000-33.410 DFALS	04/2001 → 06/2003
E 2000-33.410 DFLC	05/2000 → 06/2003
E 2000-33.410 DFLK	05/2000 → 06/2003
E 2000-33.410 DFLS	05/2000 → 06/2003
E 2000-33.460 DFAK, DFALK	05/2000 → 06/2003
E 2000-33.460 DFALC	05/2000 → 06/2003
E 2000-33.460 DFALS	04/2001 → 06/2003
E 2000-33.460 DFLC	05/2000 → 06/2003
E 2000-33.460 DFLK	05/2000 → 06/2003
E 2000-33.460 DFLS	05/2000 → 06/2003
E 2000-35.360 VFAK	05/2000 → 09/2003
E 2000-35.410 FVNLC	05/2000 → 10/2003
E 2000-35.410 VFAK	05/2000 → 10/2003
E 2000-35.460 FVNLC	05/2000 → 10/2003
E 2000-35.460 VFAK	05/2000 → 10/2003
E 2000-41.410 VFAK	05/2000 → 09/2003
E 2000-41.460 DFVS, DFVLS	06/2000 → 09/2003
E 2000-41.460 VFAK	05/2000 → 09/2003
E 2000-50.410 VFAK	05/2000 → 09/2003
E 2000-50.410 VFAVK, VFAV-G	03/2001 → 09/2003
E 2000-50.410 VFK	05/2000 → 09/2003
E 2000-50.410 VFVK, VFV-G	10/2000 → 09/2003
E 2000-50.460 VFAK	05/2000 → 09/2003
E 2000-50.460 VFAVK, VFAV-G	03/2001 → 09/2003
E 2000-50.460 VFK	05/2000 → 09/2003
E 2000-50.460 VFVK, VFV-G	10/2000 → 09/2003
EL-EL 202,EL 222	01/1993 → 06/1997
EL-EL 202,EL 262	04/1994 → 06/1997
EL-EL 262	07/1998 → 09/2001
EM-EM 192	10/1993 → 06/1997
EM-EM 222,EM 223	02/1996 → 09/2001
EM-EM 223	02/1996 → 09/2001
F 2000-19.233 FCNG	09/1996 → 12/2001
F 2000-19.233 FKNG	01/1994 → 12/2001
F 2000-19.273 F, FL, FLL	01/1994 → 12/1995
F 2000-19.273 FK	01/1994 → 12/1995
F 2000-19.293 FAC	08/1996 → 09/2001
F 2000-19.293 FAK	08/1996 → 01/2000
F 2000-19.293 FAS	08/1996 → 09/2001
F 2000-19.293 FC,19.293 FLC,19.293 FLLC	08/1996 → 09/2001
F 2000-19.293 FK,19.293 FLK	08/1996 → 09/2001
F 2000-19.293 FS,19.293 FLS,19.293 FLLS	08/1996 → 09/2001





063524160780 MSN2064 5,4kW 24V

MAN	
F 2000-19.314 FAC	05/2001 → 08/2002
F 2000-19.314 FAK, FA-KI	05/2001 → 08/2002
F 2000-19.314 FAS	06/1998 → 12/2001
F 2000-19.314 FC, FLC, FLLC, FLLW, FRC, FLRC, FLLRC, FLL, FLLR, F-N	06/1998 → 12/2001
F 2000-19.314 FK, FLK, F-KI, FL-KI	06/1998 → 12/2001
F 2000-19.314 FS, FLS, FLLS, FRS, FLRS, FLLRS	06/1998 → 12/2001
F 2000-19.343 FAC	08/1996 → 09/2001
F 2000-19.343 FAK	08/1996 → 09/2001
F 2000-19.343 FC,19.343 FLC,19.343 FLLC	08/1996 → 09/2001
F 2000-19.343 FK,19.343 FLK	08/1996 → 09/2001
F 2000-19.343 FS,19.343 FLS,19.343 FLLS	08/1996 → 09/2001
F 2000-19.364 FAC	06/1998 → 12/2001
F 2000-19.364 FAK, FA-KI	06/1998 → 12/2001
F 2000-19.364 FAS	06/1998 → 12/2001
F 2000-19.364 FC, FLC, FLLC, FLLW, FRC, FLRC, FLLRC, FLL, FLLR, F-N	06/1998 → 12/2001
F 2000-19.364 FK, FLK, F-KI, FL-KI	06/1998 → 12/2001
F 2000-19.364 FS, FLS, FLLS, FRS, FLRS, FLLRS	06/1998 → 12/2001
F 2000-19.373 FAC	01/1994 → 12/1995
F 2000-19.373 FAK, FA-KI	01/1994 → 12/1995
F 2000-19.373 FAS	01/1994 → 12/1995
F 2000-19.373 FC, FLC, FLLC, FRC, FLRC, F-NL	01/1994 → 09/2001
F 2000-19.373 FK, FLK, F-KI, FL-KI	01/1994 → 12/1995
F 2000-19.373 FS, FLS, FLLS, FRS, FLRS, FLLRS	01/1994 → 12/1995
F 2000-19.403 FAC	01/1994 → 12/2001
F 2000-19.403 FAK, FA-KI	01/1994 → 12/2001
F 2000-19.403 FAS	01/1994 → 12/2001
F 2000-19.403 FC, FLC, FLLC, FRC, FLRC, F-NL	01/1994 → 12/2001
F 2000-19.403 FK, FLK, F-KI, FL-KI	01/1994 → 12/2001
F 2000-19.403 FS, FLS, FLLS, FRS, FLRS, FLLRS	01/1994 → 12/2001
F 2000-19.414 FAC	06/1998 → 12/2001
F 2000-19.414 FAK, FA-KI	06/1998 → 12/2001
F 2000-19.414 FAS	06/1998 → 12/2001
F 2000-19.414 FC, FLC, FLLC, FRC, FLRC, FLLRC, FLL, FLLR, F-NL	06/1998 → 12/2001
F 2000-19.414 FK, FLK, F-KI, FL-KI	06/1998 → 12/2001
F 2000-19.414 FS, FLS, FLLS, FRS, FLRS, FLLRS	06/1998 → 12/2001
F 2000-19.423 FAC	01/1994 → 12/1995
F 2000-19.423 FAK, FA-KI	01/1994 → 12/1995




063524160780 MSN2064 5,4kW 24V

MAN	
F 2000-19.423 FAS	01/1994 → 12/1995
F 2000-19.423 FC, FLC, FLLC, F-NL	01/1994 → 12/1995
F 2000-19.423 FK, FLK, F-KI, FL-KI	01/1994 → 12/1995
F 2000-19.423 FS, FLS, FLLS	01/1994 → 12/1995
F 2000-19.463 FAC	01/1994 → 12/2001
F 2000-19.463 FAK, FA-KI	01/1994 → 12/2001
F 2000-19.463 FAS	01/1994 → 12/2001
F 2000-19.463 FC, FLC, FLLC, FRC, FLRC, F-NL	01/1994 → 12/2001
F 2000-19.463 FK, FLK, F-KI, FL-KI	01/1994 → 12/2001
F 2000-19.463 FS, FLS, FLLS, FRS, FLRS, FLLRS	01/1994 → 12/2001
F 2000-19.464 FAC	06/1998 → 12/2002
F 2000-19.464 FAK, FA-KI	06/1998 → 09/2001
F 2000-19.464 FAS	06/1998 → 09/2001
F 2000-19.464 FC, FLC, FLLC, FLL, FRC, FLLR, FLLRC, FLLW, F-NL	06/1998 → 09/2001
F 2000-19.464 FK, FLK, F-KI, FL-KI	06/1998 → 09/2001
F 2000-19.464 FS, FLS, FLLS, FRS, FLRS, FLLRS	06/1998 → 09/2001
F 2000-23.293 FNLLC	08/1996 → 01/2000
F 2000-23.314 FNLLC	05/2001 → 12/2002
F 2000-23.343 FNLLC	08/1996 → 01/2000
F 2000-23.364 FNLLC	05/2001 → 12/2002
F 2000-23.403 FNLLC	01/1994 → 09/2001
F 2000-23.463 FNLLC	01/1994 → 09/2001
F 2000-24.293 FNLLC	08/1996 → 01/2000
F 2000-24.314 FNLLRC	05/2001 → 08/2002
F 2000-24.343 FNLLC	08/1996 → 01/2000
F 2000-24.364 FNLLRC	05/2001 → 09/2001
F 2000-24.373 FNLLC	01/1994 → 12/1995
F 2000-24.403 FNLLC	01/1994 → 09/2001
F 2000-24.414 FNLLRC	05/2001 → 12/2001
F 2000-24.423 FNLLC	01/1994 → 12/1995
F 2000-24.463 FNLLC	01/1994 → 09/2001
F 2000-24.464 FNLLRC	05/2001 → 09/2001
F 2000-26.233 FVLCNG	09/1996 → 08/2002
F 2000-26.233 FVL-KO	03/2000 → 08/2002
F 2000-26.293 DFC,26.293 DFLC	04/1995 → 01/2000
F 2000-26.293 DFK,26.293 DFLK	04/1995 → 01/2000
F 2000-26.293 DFS,26.293 DFLS	04/1995 → 01/2000
F 2000-26.293 FNLC,26.293 FNLLC,26.293 FVLC	04/1995 → 01/2000
F 2000-26.293 FNLS,26.293 FVLS	04/1995 → 01/2000
F 2000-26.314 DFC, DFLC	05/2001 → 06/2003

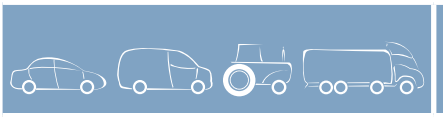


063524160780 MSN2064 5,4kW 24V

MAN	
F 2000-26.314 DFK, DFLK	05/2001 → 06/2003
F 2000-26.314 DFS, DFLS	05/2001 → 06/2003
F 2000-26.314 DF-TM	05/2001 → 06/2003
F 2000-26.314 FNLC, FNLLC, FNLLRC, FNLLW, FVLC	05/2001 → 06/2003
F 2000-26.314 FNLS	05/2001 → 06/2003
F 2000-26.314 FVL-KO	05/2001 → 06/2003
F 2000-26.314 FVLS, FVLRS	05/2001 → 06/2003
F 2000-26.343 DFC,26.343 DFLC	01/1994 → 01/2000
F 2000-26.343 DFK,26.343 DFLK	01/1994 → 09/2001
F 2000-26.343 DFS,26.343 DFLS	01/1994 → 01/2000
F 2000-26.343 FNLC,26.343 FNLLC,26.343 FVLC	01/1994 → 01/2000
F 2000-26.343 FNLS,26.343 FVLS	01/1994 → 01/2000
F 2000-26.364 DFC, DFLC	05/2001 → 06/2003
F 2000-26.364 DFK, DFLK	05/2001 → 06/2003
F 2000-26.364 DFS, DFLS	05/2001 → 06/2003
F 2000-26.364 DF-TM	05/2001 → 06/2003
F 2000-26.364 FNLC, FNLLC, FNLLRC, FNLLW, FVLC	05/2001 → 06/2003
F 2000-26.364 FNLS	05/2001 → 06/2003
F 2000-26.364 FVL-KO	05/2001 → 06/2003
F 2000-26.364 FVLS, FVLRS	05/2001 → 06/2003
F 2000-26.373 DFC,26.373 DFLC	01/1994 → 12/1995
F 2000-26.373 DFK,26.373 DFLK	01/1994 → 12/1995
F 2000-26.373 DFS,26.373 DFLS	01/1994 → 12/1995
F 2000-26.373 FNLC,26.373 FNLLC,26.373 FVLC	01/1994 → 12/1995
F 2000-26.373 FNLS,26.373 FVLS	01/1994 → 12/1995
F 2000-26.403 DFC,26.403 DFLC	01/1994 → 09/2001
F 2000-26.403 DFK,26.403 DFLK	01/1994 → 09/2001
F 2000-26.403 DFS,26.403 DFLS	01/1994 → 09/2001
F 2000-26.403 FNLC,26.403 FNLLC,26.403 FVLC	01/1994 → 09/2001
F 2000-26.403 FNLS,26.403 FVLS	01/1994 → 09/2001
F 2000-26.414 DFC, DFLC	05/2001 → 09/2002
F 2000-26.414 DFK, DFLK	05/2001 → 09/2002
F 2000-26.414 DFS, DFLS	05/2001 → 09/2002
F 2000-26.414 DF-TM	05/2001 → 09/2002
F 2000-26.414 FNLC, FNLLC, FNLLRC, FNLLW, FVLC	05/2001 → 09/2002
F 2000-26.414 FNLS	05/2001 → 09/2002
F 2000-26.414 FVL-KO	05/2001 → 09/2002
F 2000-26.414 FVLS, FVLRS	05/2001 → 09/2002





063524160780 MSN2064 5,4kW 24V

MAN	
F 2000-26.423 DFC,26.423 DFLC	01/1994 → 12/1995
F 2000-26.423 DFK,26.423 DFLK	01/1994 → 12/1995
F 2000-26.423 DFS,26.423 DFLS	01/1994 → 12/1995
F 2000-26.423 FNLC,26.423 FNLLC,26.423 FVLC	01/1994 → 12/1995
F 2000-26.423 FNLS,26.423 FVLS	01/1994 → 12/1995
F 2000-26.463 DFC, DFLC	01/1994 → 09/2001
F 2000-26.463 DFK,26.463 DFLK	01/1994 → 09/2001
F 2000-26.463 DFS,26.463 DFLS	01/1994 → 09/2001
F 2000-26.463 FNLC, FNLLC, FVLC	01/1994 → 09/2001
F 2000-26.463 FNLS,26.463 FVLS	01/1994 → 09/2001
F 2000-26.464 DFC, DFLC	05/2001 → 09/2002
F 2000-26.464 DFK, DFLK	05/2001 → 09/2002
F 2000-26.464 DFS, DFLS	05/2001 → 09/2002
F 2000-26.464 DF-TM	05/2001 → 09/2002
F 2000-26.464 FNLS	05/2001 → 09/2002
F 2000-26.464 FVL-KO	05/2001 → 09/2002
F 2000-26.464 FVLS, FVLRS	05/2001 → 09/2002
F 2000-27.293 DFAC	08/1996 → 01/2000
F 2000-27.293 DFAK	08/1996 → 01/2000
F 2000-27.293 DFAS	08/1996 → 01/2000
F 2000-27.293 DFC	08/1996 → 01/2000
F 2000-27.293 DFK	08/1996 → 01/2000
F 2000-27.293 DFS	08/1996 → 01/2000
F 2000-27.314 DFAC	05/2001 → 08/2002
F 2000-27.314 DFAK, DFA-KI	05/2001 → 08/2002
F 2000-27.314 DFAS	05/2001 → 08/2002
F 2000-27.314 DFC	05/2001 → 08/2002
F 2000-27.314 DFK, DF-KI	05/2001 → 08/2002
F 2000-27.314 DFS	05/2001 → 08/2002
F 2000-27.314 DF-TM	05/2001 → 08/2002
F 2000-27.314 FVL	01/2000 → 08/2002
F 2000-27.343 DFAK	08/1996 → 01/2000
F 2000-27.343 DFAS	08/1996 → 01/2000
F 2000-27.343 DFC	08/1996 → 01/2000
F 2000-27.343 DFK	08/1996 → 01/2000
F 2000-27.343 DFS	08/1996 → 01/2000
F 2000-27.364 DFAC	05/2001 → 09/2002
F 2000-27.364 DFAK, DFA-KI	05/2001 → 09/2002
F 2000-27.364 DFAS	05/2001 → 09/2002
F 2000-27.364 DFC	05/2001 → 09/2002
F 2000-27.364 DFK, DF-KI	05/2001 → 09/2002
F 2000-27.364 DFS	05/2001 → 09/2002
F 2000-27.364 DF-TM	05/2001 → 09/2002





063524160780 MSN2064 5,4kW 24V

MAN	
F 2000-27.364 FVL	07/1999 → 09/2002
F 2000-27.373 DFAC	01/1994 → 12/1995
F 2000-27.373 DFAK, DFA-KI	01/1994 → 12/1995
F 2000-27.373 DFAS	01/1994 → 12/1995
F 2000-27.373 DFC	01/1994 → 12/1995
F 2000-27.373 DFK, DF-KI	01/1994 → 12/1995
F 2000-27.373 DFS	01/1994 → 12/1995
F 2000-27.403 DFAC	01/1994 → 09/2001
F 2000-27.403 DFAK, DFA-KI	01/1994 → 09/2001
F 2000-27.403 DFAS	01/1994 → 09/2001
F 2000-27.403 DFC	01/1994 → 09/2001
F 2000-27.403 DFK, DF-KI	01/1994 → 09/2001
F 2000-27.403 DFS	01/1994 → 09/2001
F 2000-27.414 DFAC	05/2001 → 08/2002
F 2000-27.414 DFAK, DFA-KI	05/2001 → 08/2002
F 2000-27.414 DFAS	05/2001 → 08/2002
F 2000-27.414 DFC	05/2001 → 08/2002
F 2000-27.414 DFK, DF-KI	05/2001 → 08/2002
F 2000-27.414 DFS	05/2001 → 08/2002
F 2000-27.414 DF-TM	05/2001 → 08/2002
F 2000-27.414 FVL	01/2000 → 08/2002
F 2000-27.423 DFAC	01/1994 → 12/1995
F 2000-27.423 DFAK, DFA-KI	01/1994 → 12/1995
F 2000-27.423 DFAS	01/1994 → 12/1995
F 2000-27.423 DFC	01/1994 → 12/1995
F 2000-27.423 DFK, DF-KI	01/1994 → 12/1995
F 2000-27.423 DFS	01/1994 → 12/1995
F 2000-27.463 DFAC	01/1994 → 09/2001
F 2000-27.463 DFAK, DFA-KI	01/1994 → 09/2001
F 2000-27.463 DFAS	01/1994 → 09/2001
F 2000-27.463 DFC	01/1994 → 09/2001
F 2000-27.463 DFK, DF-KI	01/1994 → 09/2001
F 2000-27.463 DFS	01/1994 → 09/2001
F 2000-27.463 DF-TM	07/2000 → 08/2002
F 2000-27.464 DFAC	05/2001 → 08/2002
F 2000-27.464 DFAK, DFA-KI	05/2001 → 08/2002
F 2000-27.464 DFAS	05/2001 → 08/2002
F 2000-27.464 DFK, DF-KI	05/2001 → 08/2002
F 2000-27.464 DFS	01/1994 → 09/2001
F 2000-27.464 DF-TM	05/2001 → 08/2002
F 2000-27.464 FVL	01/2000 → 08/2002
F 2000-32.293 VFC	08/1996 → 09/2001
F 2000-32.314 VF, VFC	05/2001 → 12/2001
F 2000-32.314 VFK, VF-HK	05/2001 → 12/2001




063524160780 MSN2064 5,4kW 24V

MAN	
F 2000-32.314 VF-TM	05/2001 → 12/2001
F 2000-32.343 VFC	08/1996 → 09/2001
F 2000-32.343 VFK	08/1996 → 09/2001
F 2000-32.364 VF, VFC	05/2001 → 09/2001
F 2000-32.364 VFK, VF-HK	05/2001 → 09/2001
F 2000-32.364 VF-TM	05/2001 → 09/2002
F 2000-32.403 VFC	08/1995 → 09/2001
F 2000-32.403 VFK	08/1995 → 09/2001
F 2000-32.414 VF, VFC	05/2001 → 12/2001
F 2000-32.414 VFK, VF-HK	05/2001 → 12/2001
F 2000-32.414 VF-TM	05/2001 → 12/2001
F 2000-32.463 VFC	08/1995 → 09/2001
F 2000-32.463 VFK	08/1995 → 09/2001
F 2000-32.464 VF, VFC	05/2001 → 12/2001
F 2000-32.464 VFK, VF-HK	05/2001 → 12/2001
F 2000-32.464 VF-TM	05/2001 → 12/2001
F 2000-33.343 DFAC	08/1996 → 09/2001
F 2000-33.343 DFAK	08/1996 → 09/2001
F 2000-33.343 DFAS	08/1996 → 09/2001
F 2000-33.343 DFC	08/1996 → 09/2001
F 2000-33.343 DFK	08/1996 → 09/2001
F 2000-33.343 DFS	08/1996 → 09/2001
F 2000-33.364 DFAC	05/2001 → 09/2001
F 2000-33.364 DFAK, DFA-KI	05/2001 → 09/2001
F 2000-33.364 DFAS	05/2001 → 09/2001
F 2000-33.364 DFC	05/2001 → 09/2001
F 2000-33.364 DFK, DF-KI	05/2001 → 09/2001
F 2000-33.364 DFS, DFRS	05/2001 → 09/2001
F 2000-33.373 DFAC	01/1994 → 12/1995
F 2000-33.373 DFAK, DFA-KI	01/1994 → 12/1995
F 2000-33.373 DFAS	01/1994 → 12/1995
F 2000-33.373 DFC	01/1994 → 12/1995
F 2000-33.373 DFK, DF-KI	01/1994 → 12/1995
F 2000-33.373 DFS, DFRS	01/1994 → 12/1995
F 2000-33.403 DFAC	01/1994 → 09/2001
F 2000-33.403 DFAK, DFA-KI	01/1994 → 09/2001
F 2000-33.403 DFAS	01/1994 → 09/2001
F 2000-33.403 DFC	01/1994 → 09/2001
F 2000-33.403 DFK, DF-KI	01/1994 → 09/2001
F 2000-33.403 DFS, DFRS	01/1994 → 09/2001
F 2000-33.414 DFAC	05/2001 → 08/2002
F 2000-33.414 DFAK, DFA-KI	05/2001 → 08/2002
F 2000-33.414 DFAS	05/2001 → 08/2002
F 2000-33.414 DFC	05/2001 → 08/2002

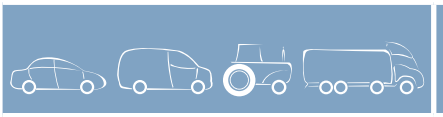


063524160780 MSN2064 5,4kW 24V

MAN	
F 2000-33.414 DFK, DF-KI	05/2001 → 08/2002
F 2000-33.414 DFS, DFRS	05/2001 → 08/2002
F 2000-33.423 DFAC	01/1994 → 12/1995
F 2000-33.423 DFAK, DFA-KI	01/1994 → 12/1995
F 2000-33.423 DFAS	01/1994 → 12/1995
F 2000-33.423 DFC	01/1994 → 12/1995
F 2000-33.423 DFK, DF-KI	01/1994 → 12/1995
F 2000-33.423 DFS, DFRS	01/1994 → 12/1995
F 2000-33.463 DFAC	01/1994 → 09/2001
F 2000-33.463 DFAK, DFA-KI	01/1994 →
F 2000-33.463 DFAS	01/1994 →
F 2000-33.463 DFC	01/1994 →
F 2000-33.463 DFK, DF-KI	01/1994 →
F 2000-33.463 DFS, DFRS	01/1994 →
F 2000-33.464 DFAC	05/2001 →
F 2000-33.464 DFAK, DFA-KI	05/2001 →
F 2000-33.464 DFAS	05/2001 →
F 2000-33.464 DFC	05/2001 →
F 2000-33.464 DFK, DF-KI	05/2001 →
F 2000-33.464 DFS, DFRS	05/2001 →
F 2000-35.314 VF-TM	03/2002 → 09/2003
F 2000-35.343 VFC	08/1998 → 09/2001
F 2000-35.343 VFK	08/1998 → 09/2001
F 2000-35.364 VF, VFC, VFRC	05/2001 → 09/2001
F 2000-35.403 VF, VFC, VFRC	08/1995 → 09/2001
F 2000-35.414 VF, VFC, VFRC	09/2002 → 06/2003
F 2000-35.414 VFK, VF-HK, VF-KI	09/2002 → 06/2003
F 2000-35.414 VF-TM	09/2002 → 06/2003
F 2000-35.463 VF, VFC, VFRC	08/1995 → 09/2001
F 2000-35.463 VFK, VF-HK, VF-KI	08/1995 → 09/2001
F 2000-35.464 VF, VFC, VFRC	05/2001 → 08/2002
F 2000-35.464 VFK, VF-HK, VF-KI	03/2002 → 08/2002
F 2000-35.464 VF-TM	03/2002 → 08/2002
F 2000-40.403 DFAK	08/1995 → 09/2001
F 2000-40.403 DFAS	08/1995 → 09/2001
F 2000-40.403 DFK	08/1995 → 09/2001
F 2000-40.403 DFS	08/1995 → 09/2001
F 2000-40.414 DFAK	05/2001 → 08/2002
F 2000-40.414 DFK	05/2001 → 08/2002
F 2000-40.463 DFAK	08/1995 → 09/2001
F 2000-40.463 DFAS	08/1995 → 09/2001
F 2000-40.463 DFK	08/1995 → 09/2001
F 2000-40.463 DFS	08/1995 → 09/2001
F 2000-41.343 VFC	08/1996 → 09/2001




063524160780 MSN2064 5,4kW 24V

MAN	
F 2000-41.343 VFK	08/1996 → 09/2001
F 2000-41.364 VF, VFC, VFRC	05/2001 → 08/2002
F 2000-41.364 VFK, VF-HK, VF-KI	03/2002 → 08/2002
F 2000-41.403 VF, VFC, VFRC	08/1995 → 09/2001
F 2000-41.403 VFK, VF-HK, VF-KI	08/1995 → 09/2001
F 2000-41.414 VF, VFC, VFRC	05/2001 → 08/2002
F 2000-41.414 VFK, VF-HK, VF-KI	03/2002 → 08/2002
F 2000-41.463 VF, VFC, VFRC	08/1995 → 09/2001
F 2000-41.463 VFK, VF-HK, VF-KI	08/1995 → 09/2001
F 2000-41.464 VF, VFC, VFRC	07/1999 → 08/2002
F 2000-41.464 VFK, VF-HK, VF-KI	03/2002 → 08/2002
F 90-19.242 F,19.242 FL,19.242 FLL	01/1988 → 01/1989
F 90-19.242 FK	01/1988 → 02/1989
F 90-19.242 FS,19.242 FLS,19.242 FLLS	01/1988 → 01/1989
F 90-19.332 F,19.332 FL,19.332 FLL	07/1986 → 01/1990
F 90-19.332 FA	05/1988 → 01/1990
F 90-19.332 FAK	05/1988 → 01/1990
F 90-19.332 FAS	05/1988 → 01/1990
F 90-19.332 FK	07/1986 → 01/1990
F 90-19.332 FS,19.332 FLS,19.332 FLLS	07/1986 → 01/1990
F 90-19.372 F,19.372 FL,19.372 FLL	05/1990 → 04/1995
F 90-19.372 FK	05/1990 → 04/1995
F 90-19.372 FS,19.372 FLS,19.372 FLLS	05/1990 → 04/1995
F 90-24.242 DF	01/1988 → 07/1989
F 90-24.242 DFK	01/1988 → 07/1989
F 90-24.242 DFS	01/1988 → 07/1989
F 90-24.242 FNL,24.242 FNLL,24.242 FVL	01/1988 → 02/1990
F 90-24.332 DF	04/1987 → 01/1990
F 90-24.332 DFK	04/1987 → 01/1990
F 90-24.332 DFS,24.332 DFLS	07/1989 → 01/1990
F 90-24.332 FNL,24.332 FNLL,24.332 FVL	10/1986 → 01/1990
F 90-24.332 FNLS,24.332 FVLS	10/1986 → 01/1990
F 90-24.372 DF	05/1990 → 12/1990
F 90-24.372 DFK	05/1990 → 12/1990
F 90-24.372 DFS	05/1990 → 12/1990
F 90-24.372 FVL	05/1990 → 12/1990
F 90-24.372 FVLS	05/1990 → 12/1990
F 90-25.372 DF	09/1990 → 12/1992
F 90-25.372 DFK	09/1990 → 12/1992
F 90-25.372 DFS	09/1990 → 12/1992
F 90-25.372 FVLS	09/1990 → 10/1993
F 90-26.332 DF	09/1987 → 01/1990
F 90-26.332 DFA	05/1988 → 01/1990
F 90-26.332 DFAK	05/1988 → 01/1990




063524160780 MSN2064 5,4kW 24V

MAN	
F 90-26.332 DFAS	05/1988 → 01/1990
F 90-26.332 DFK	09/1987 → 01/1990
F 90-26.332 DFS	09/1987 → 01/1990
F 90-26.362 DFS	05/1988 → 02/1990
F 90-32.332 VF	03/1988 → 01/1990
F 90-32.332 VFK	03/1988 → 01/1990
F 90-32.362 VF	03/1988 → 02/1990
F 90-32.362 VFK	03/1988 → 02/1990
F 90-32.372 VF	05/1990 → 04/1995
F 90-32.372 VFK	05/1990 → 04/1995
F 90-33.242 DFAK	01/1988 → 08/1988
F 90-33.242 DFK	01/1988 → 08/1988
F 90-33.332 DF	09/1987 → 01/1990
F 90-33.332 DFA	05/1988 → 01/1990
F 90-33.332 DFAK	05/1988 → 01/1990
F 90-33.332 DFAS	05/1988 → 01/1990
F 90-33.332 DFK	09/1987 → 01/1990
F 90-33.332 DFS	09/1987 → 01/1990
F 90-35.292 VF	10/1988 → 04/1995
F 90-35.292 VFK	10/1988 → 04/1995
F 90-35.332 VF	10/1988 → 04/1995
F 90-35.332 VFK	10/1988 → 04/1995
F 90-35.362 VF	10/1988 → 02/1990
F 90-35.362 VFK	10/1988 → 02/1990
F 90-35.372 VF	02/1990 → 04/1995
F 90-35.372 VFK	02/1990 → 04/1995
F 90-41.332 VF	10/1988 → 01/1990
F 90-41.332 VFK	10/1988 → 01/1990
F 90-41.362 VF	10/1988 → 02/1990
F 90-41.362 VFK	10/1988 → 02/1990
F 90-48.332 VF	07/1989 → 01/1990
F 90-48.332 VFA	07/1989 → 01/1990
F 90-48.332 VFAK	07/1989 → 01/1990
F 90-48.362 VF	07/1989 → 02/1990
F 90-48.362 VFA	07/1989 → 02/1990
F 90-48.362 VFAK	07/1989 → 02/1990
LION S COACH-FRH 352,RH 353	11/1996 → 09/2001
LION S COACH-FRH 402,RH 403	11/1996 → 09/2001
LION S COACH-RH 402	09/1998 → 09/2001
LION S COACH-RH 463	01/2000 → 09/2006
LION S COACH-RHC 414	09/2002 → 09/2006
LION S COMFORT-RN 313	01/1998 → 12/2001
LION S COMFORT-RN 353	01/1998 → 12/2001
LION S STAR-FRH 352,RH 353	07/1998 → 09/2001

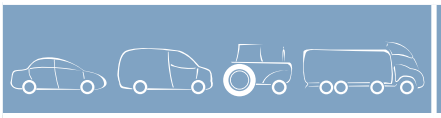



063524160780 MSN2064 5,4kW 24V

MAN	
LION S STAR-FRH 402,RH 403	11/1996 → 01/2004
LION S STAR-FRH 422	01/1993 → 09/1996
LION S STAR-RH 414	10/2001 → 09/2006
LION S STAR-RH 464, RHS 464	10/2001 → 09/2006
NG-NG 262	06/1997 → 07/1998
NG-NG 262, NG 263	07/1998 → 12/2001
NG-NG 262, NG 272	08/1992 → 07/1998
NG-NG 312	09/1995 → 07/1998
NG-NG 312, NG 313	07/1998 → 12/2001
NL-NL 202	09/1989 → 04/1994
NL-NL 202, NL 222, NL 223	02/1996 → 09/2001
NL-NL 202, NL 262, NL 263	02/1996 → 09/2001
NL-NL 243	01/2002 →
NL-NL 262	06/1997 → 09/2001
NL-NL 262, NL 263	07/1998 → 09/2001
NL-NL 312	11/1995 → 07/1998
NL-NL 313	07/1998 → 09/2001
NM-223	08/1987 →
NM-NM 182, NM 192	10/1993 → 03/1997
NM-NM 222, NM 223	06/1997 → 09/2001
NU-NU 263	09/1996 → 09/2001
NU-NU 313	07/1998 → 12/2001
NU-NU 313 15M	07/1998 → 12/2001
R-R 292, FR 292, FRH 292	04/1992 → 01/1993
SG-SG 240 H,SG 292 H	11/1984 → 09/1989
SG-SG 242,SG 292	04/1992 → 04/1993
SG-SG 312,SG 322	02/1996 → 06/1997
SM-SM 182,SM 192	04/1992 → 02/1995
SU-SU 263	06/2004 → 09/2006
SU-SU 272	04/1993 → 05/1995
SU-SU 283	09/2003 → 09/2006
SU-SU 292	04/1992 → 04/1993
SU-SU 313	09/2003 → 09/2006
SU-SU 322	05/1995 → 06/1997
UL-UL 272	03/1993 → 07/1994
UL-UL 312,UL 322	04/1992 → 09/1995
UL-UL 313	09/1996 → 09/2001
UL-UL 353	06/1997 → 12/2001

Disegni
Drawings
Zeichnungen
Plans
Diseños
Desenhosδιαγ
άμματα
Rysunki techniczne
Resimler

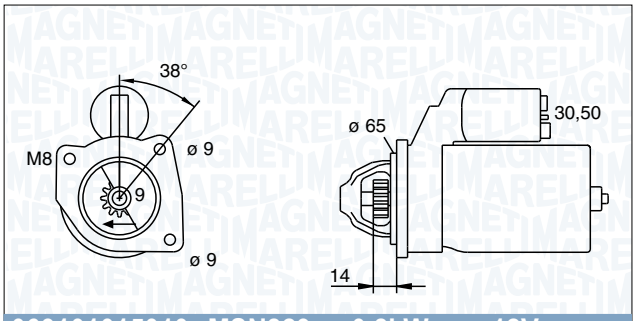

063101015010 MSN829 0,8kW 12V

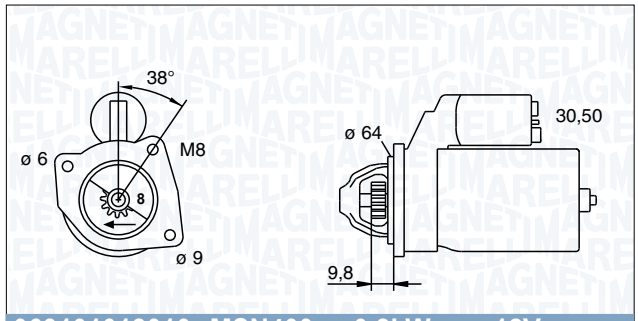

063101018010 MSN400 0,8kW 12V

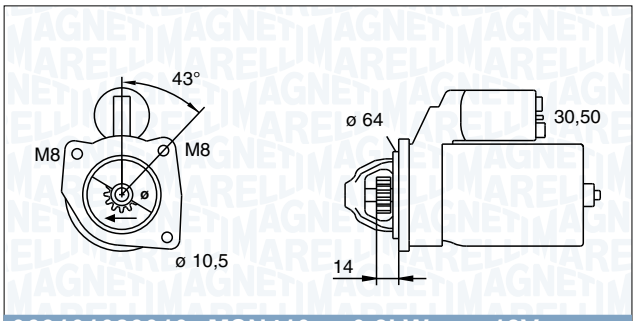

063101023010 MSN410 0,8kW 12V

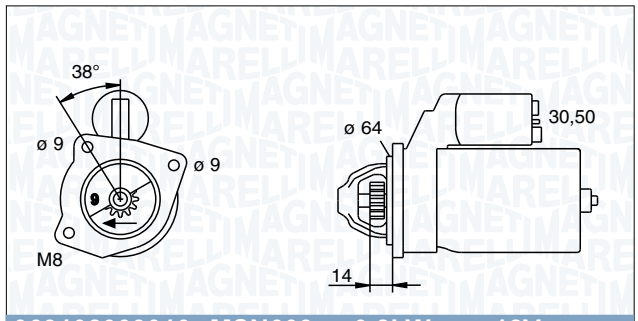

063102003010 MSN603 0,8kW 12V

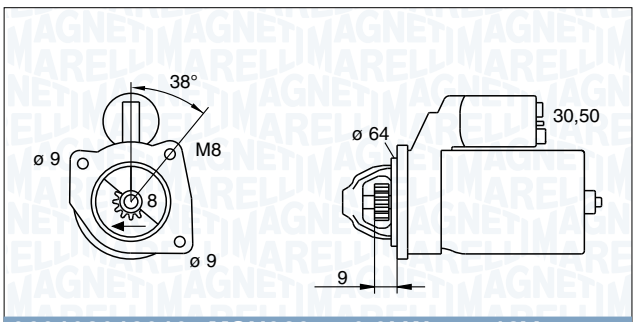

063102018010 MSN923 0,9kW 12V

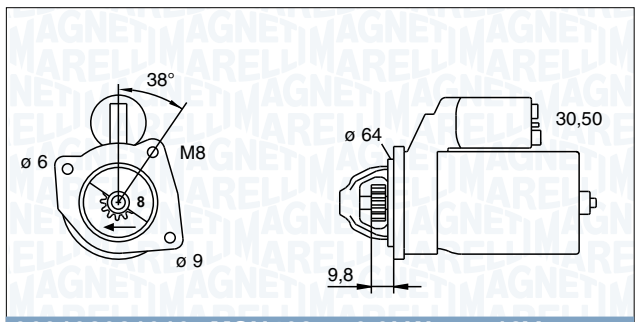

063102021010 MSN402 0,9kW 12V

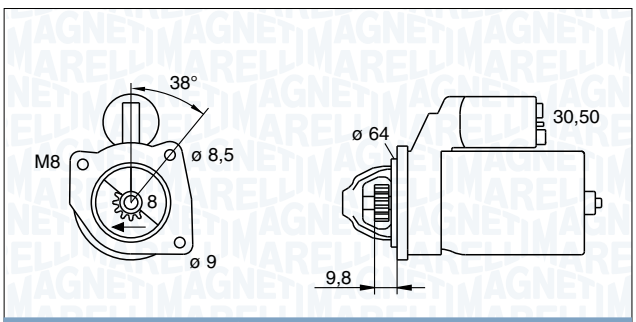

063102022010 MSN418 0,9kW 12V

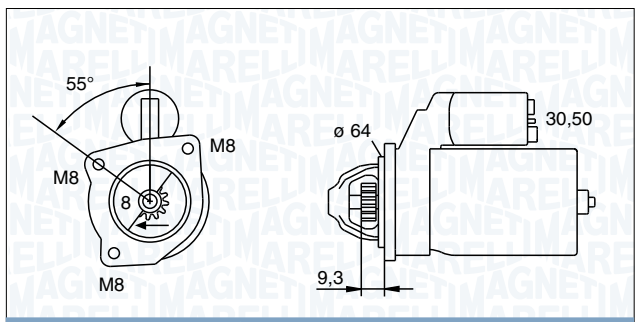

063103022010 MSN924 1,0kW 12V

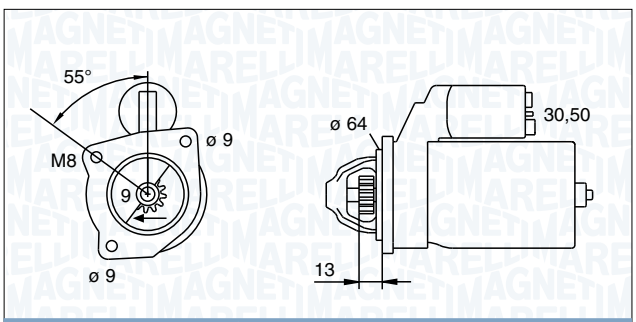

063103025010 MSN927 1,0kW 12V

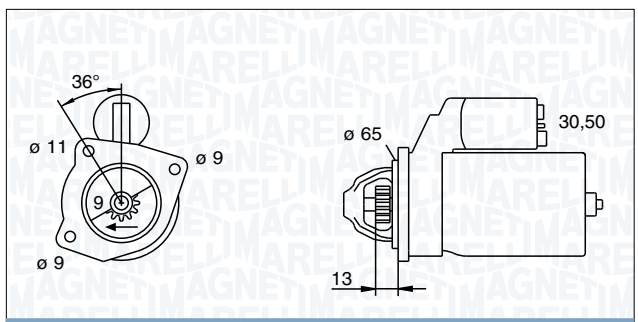

063111007010 MSN807 1,4kW 12V

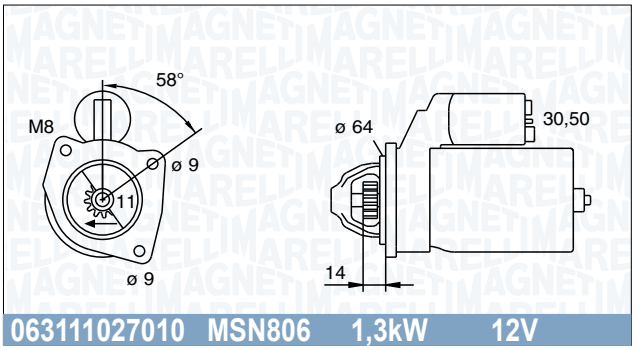

063111027010 MSN806 1,3kW 12V

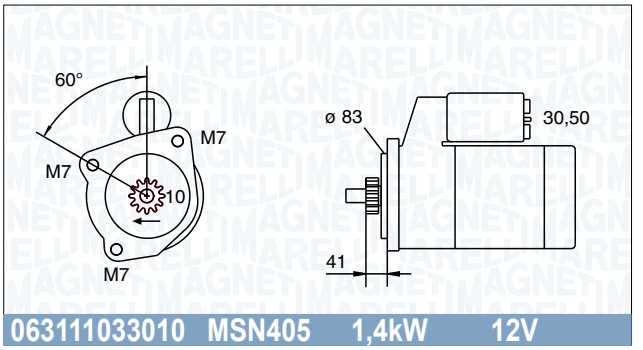

063111033010 MSN405 1,4kW 12V

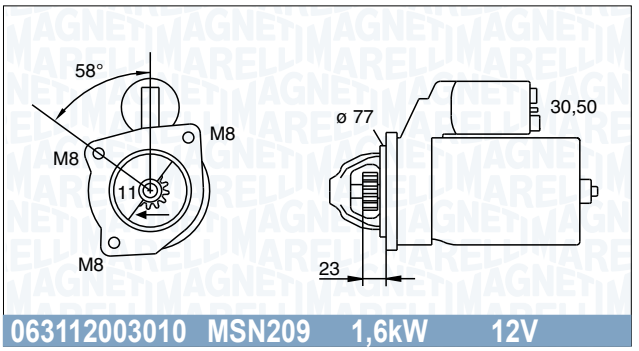

063112003010 MSN209 1,6kW 12V

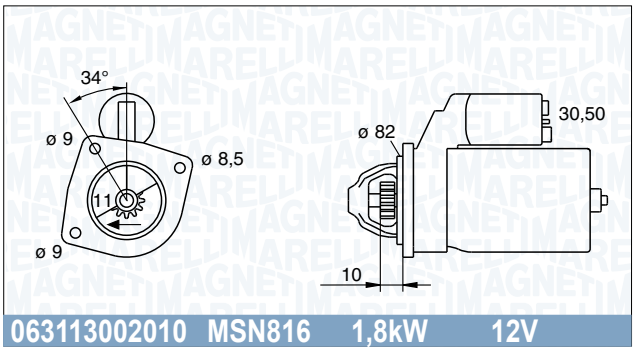

063113002010 MSN816 1,8kW 12V

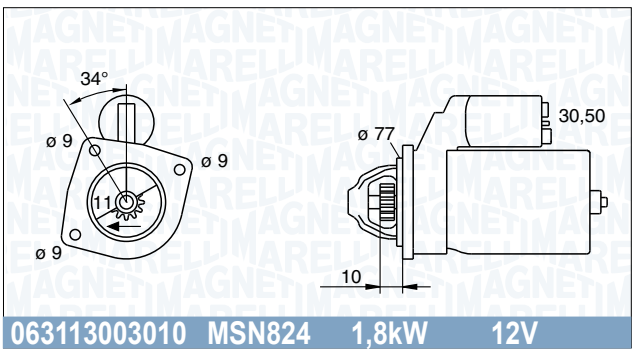

063113003010 MSN824 1,8kW 12V

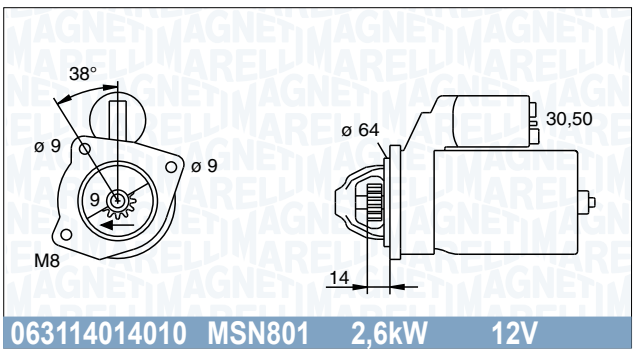

063114014010 MSN801 2,6kW 12V

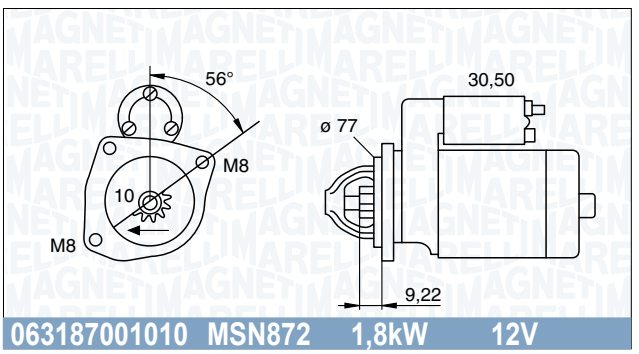

063187001010 MSN872 1,8kW 12V

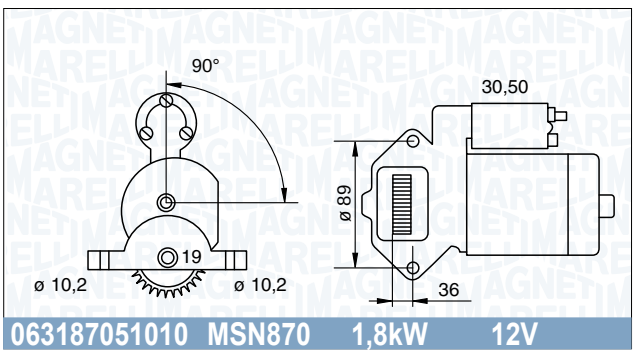

063187051010 MSN870 1,8kW 12V

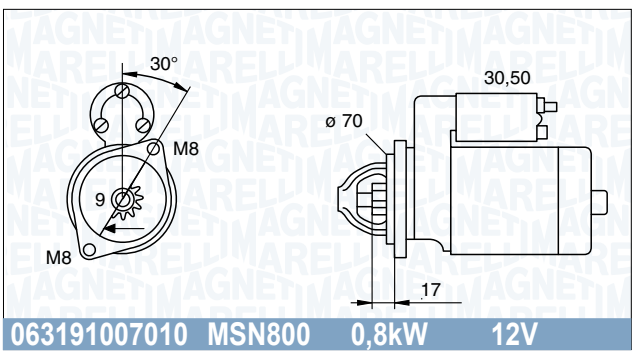

063191007010 MSN800 0,8kW 12V

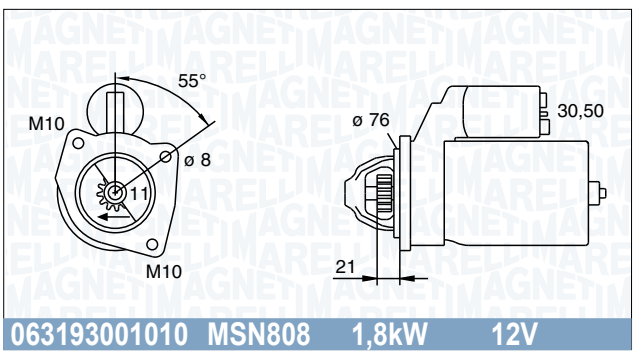

063193001010 MSN808 1,8kW 12V

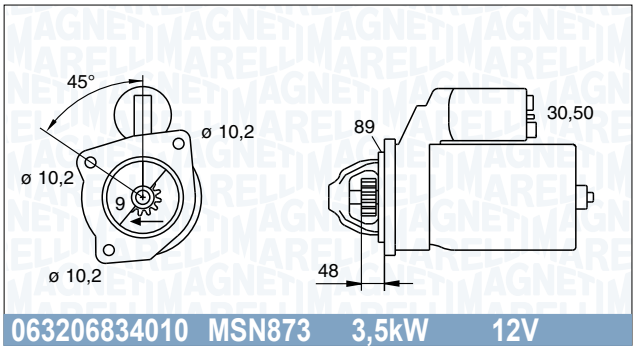

063206834010 MSN873 3,5kW 12V

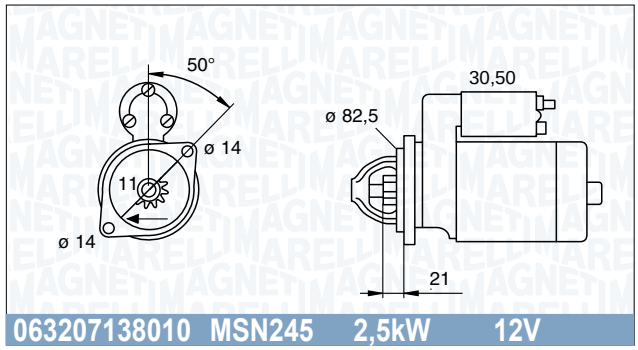

063207138010 MSN245 2,5kW 12V

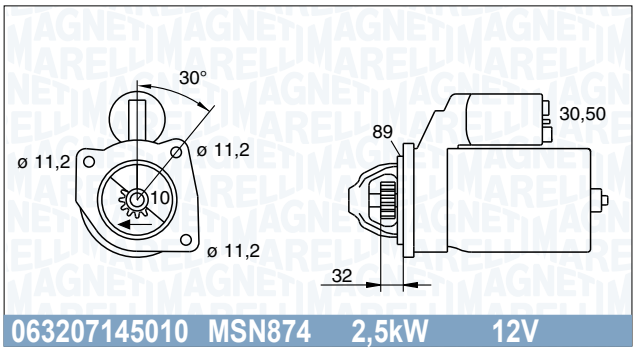

063207145010 MSN874 2,5kW 12V

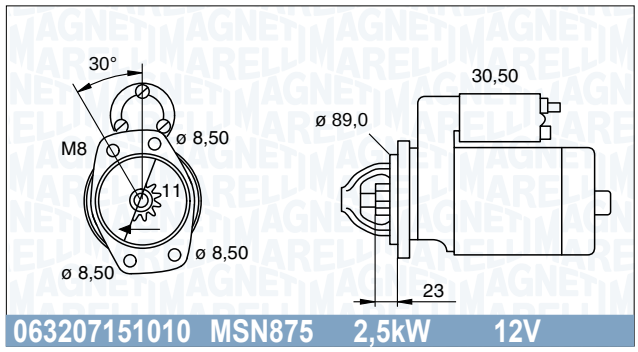

063207151010 MSN875 2,5kW 12V

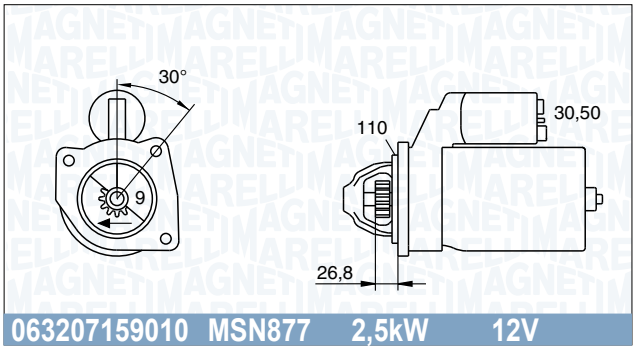

063207159010 MSN877 2,5kW 12V

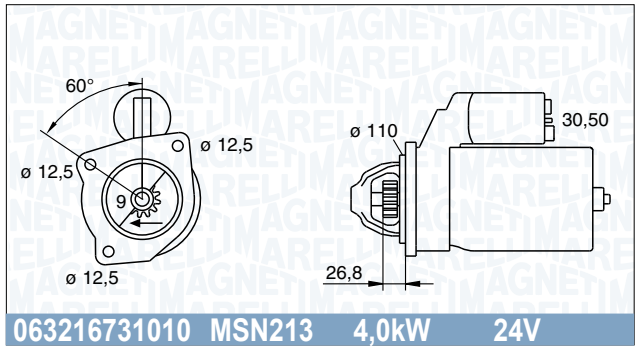

063216731010 MSN213 4,0kW 24V

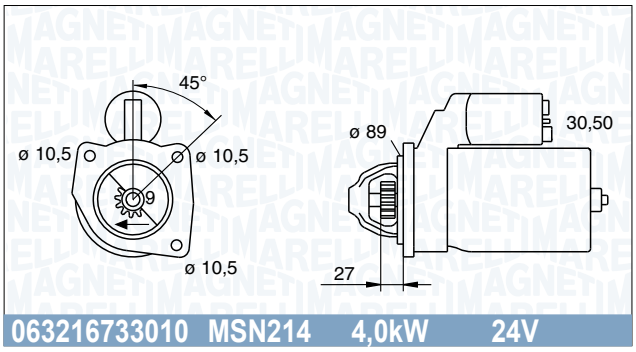

063216733010 MSN214 4,0kW 24V

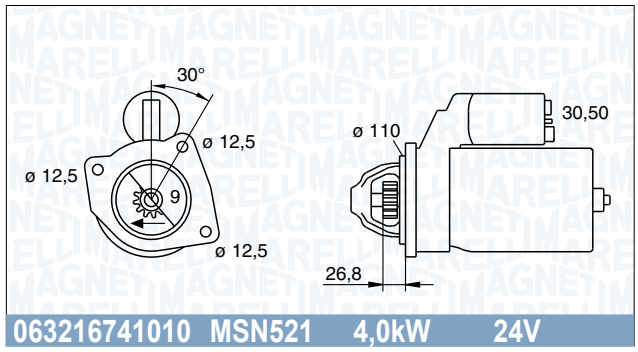

063216741010 MSN521 4,0kW 24V

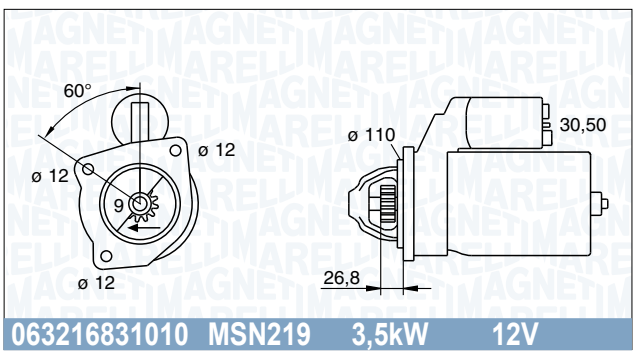

063216831010 MSN219 3,5kW 12V

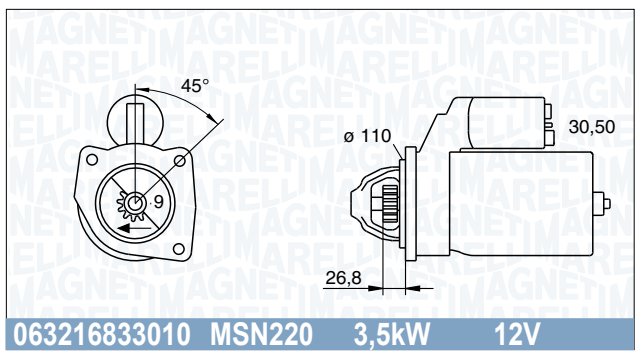

063216833010 MSN220 3,5kW 12V

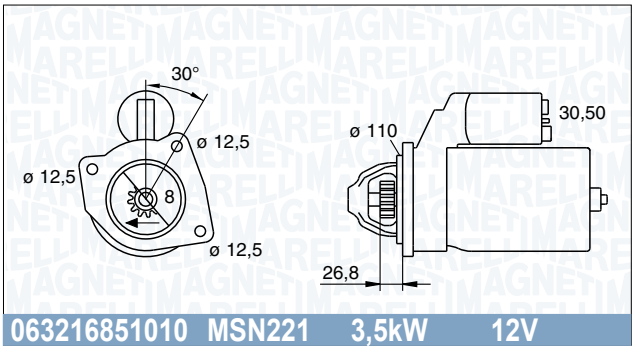

063216851010 MSN221 3,5kW 12V

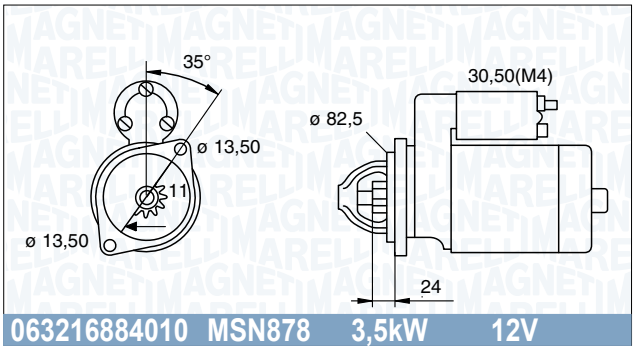

063216884010 MSN878 3,5kW 12V

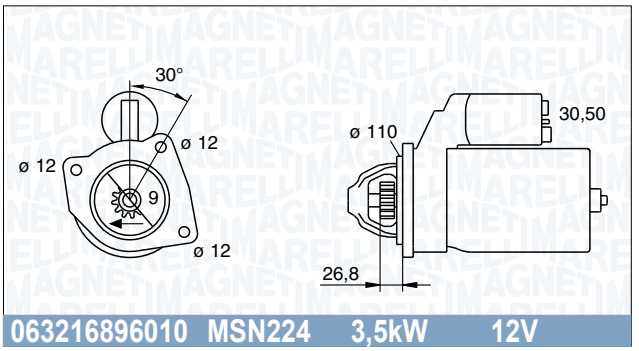

063216896010 MSN224 3,5kW 12V

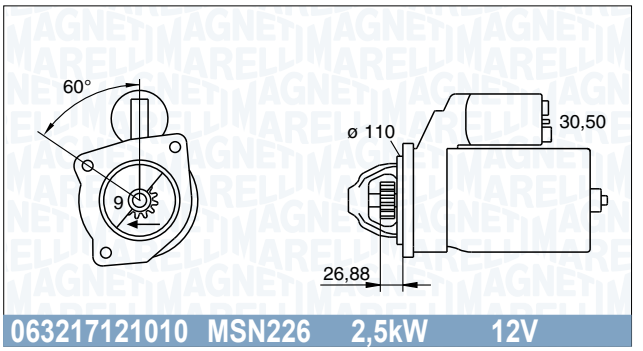

063217121010 MSN226 2,5kW 12V

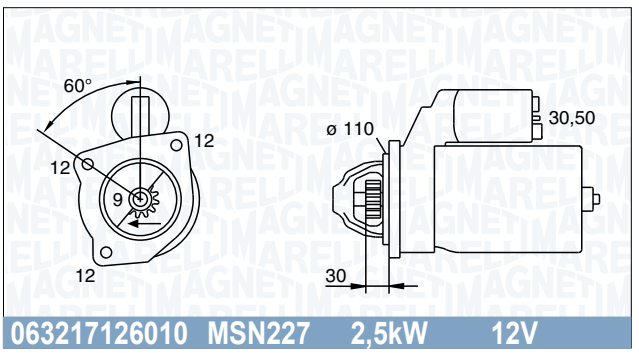

063217126010 MSN227 2,5kW 12V

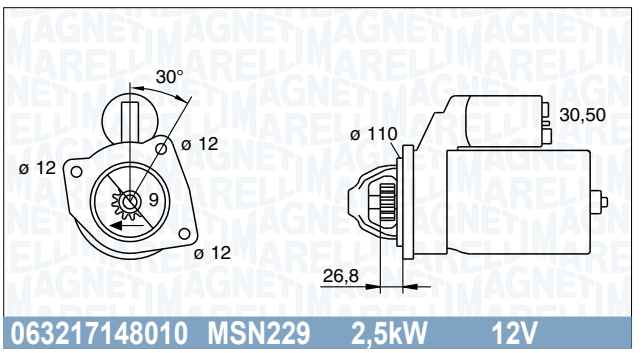

063217148010 MSN229 2,5kW 12V

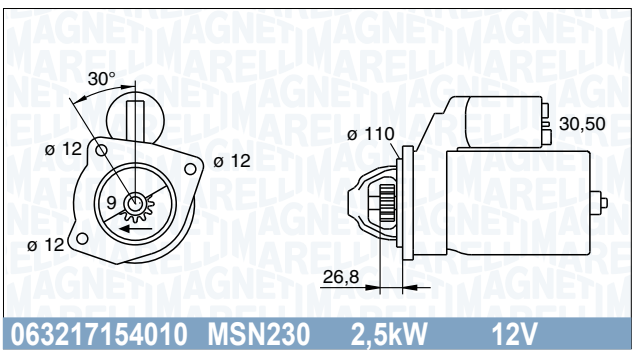

063217154010 MSN230 2,5kW 12V

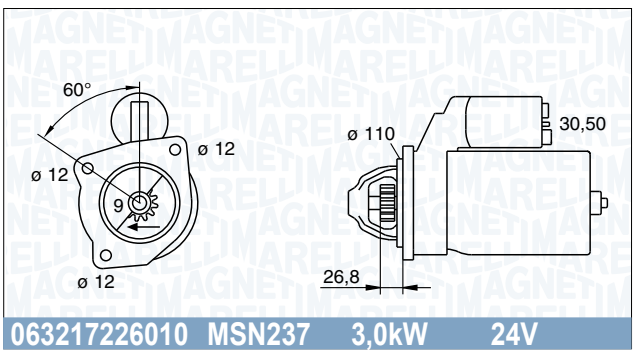

063217226010 MSN237 3,0kW 24V

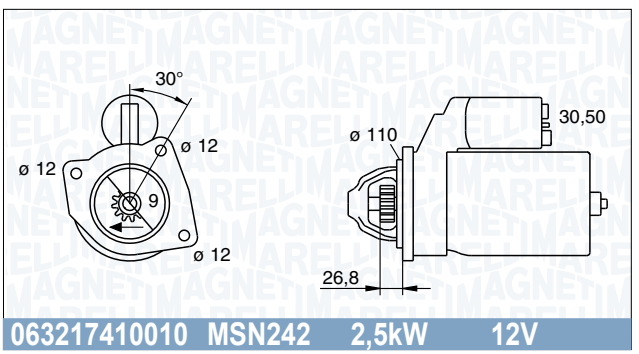

063217410010 MSN242 2,5kW 12V

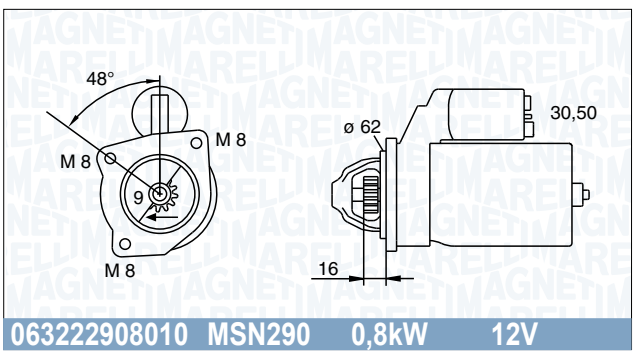

063222908010 MSN290 0,8kW 12V

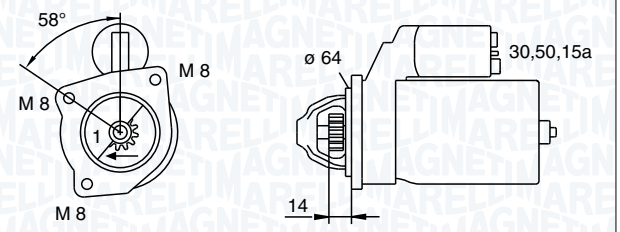

063223085010 MSN520 0,9kW 12V

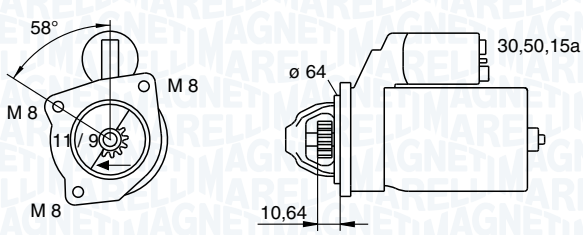

063223101010 MSN274 0,9kW 12V

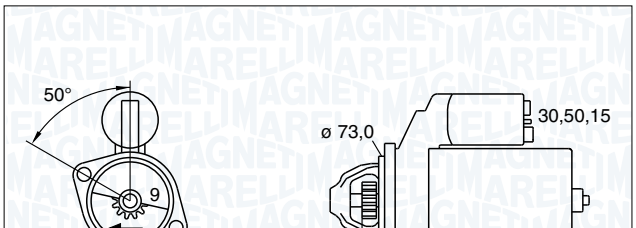

063226801010 MSN139 1,4kW 12V

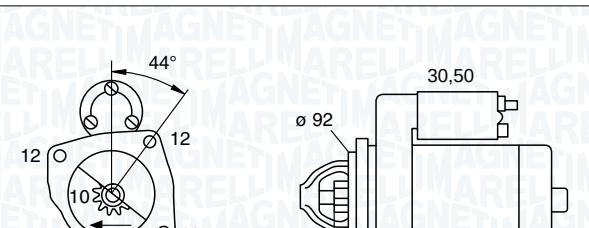

063227470010 MSN184 2,2kW 12V

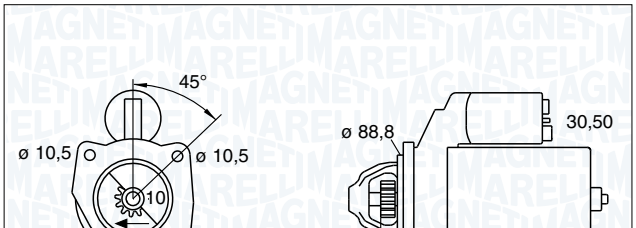

063227486010 MSN180 2,2kW 12V

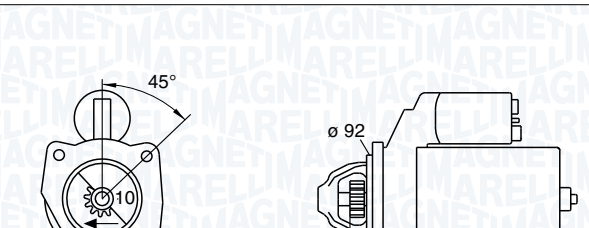

063227488010 MSN175 2,2kW 12V

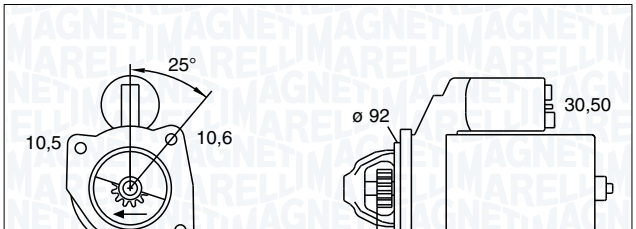

063227501010 MSN207 2,8kW 12V

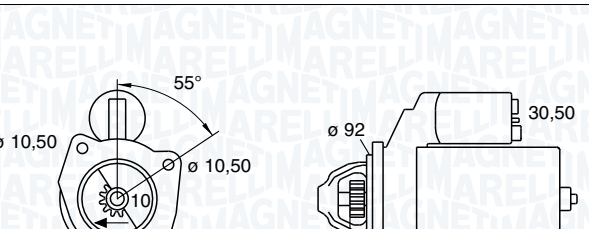

063227569010 MSN202 2,8kW 12V

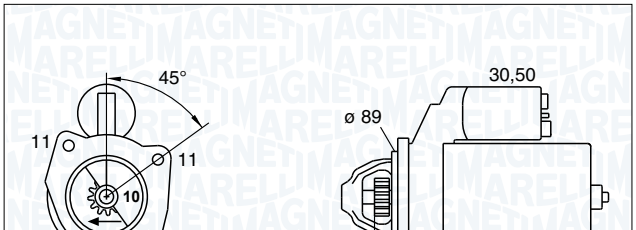

063227592010 MSN203 2,8kW 12V

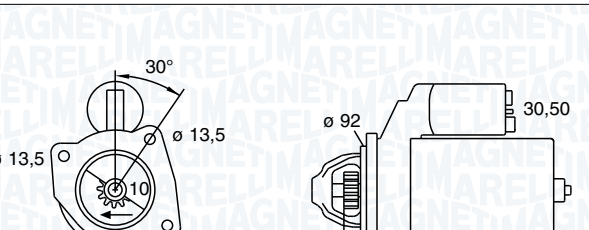

063227593010 MSN540 2,8kW 12V

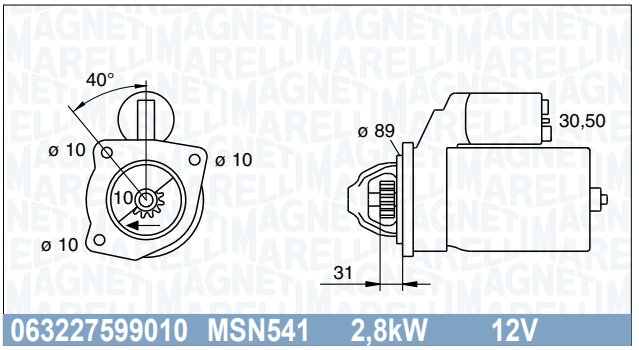

063227599010 MSN541 2,8kW 12V

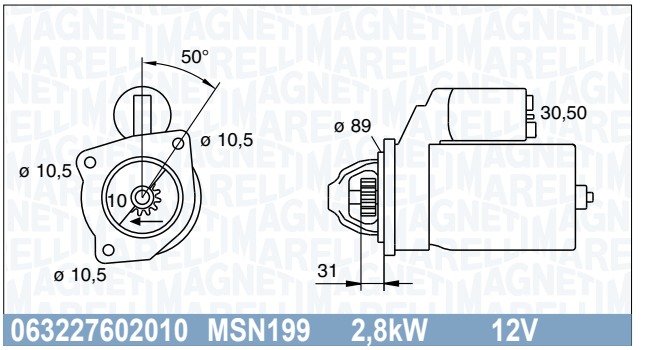

063227602010 MSN199 2,8kW 12V

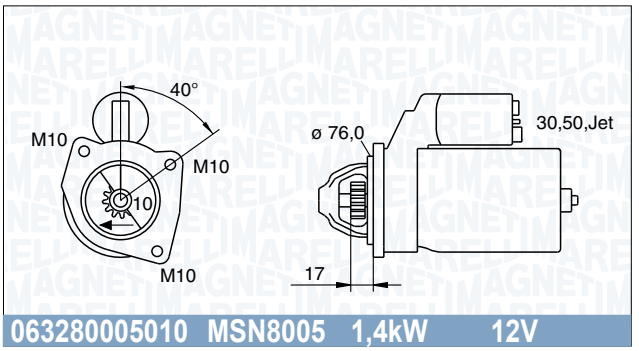

063280005010 MSN8005 1,4kW 12V

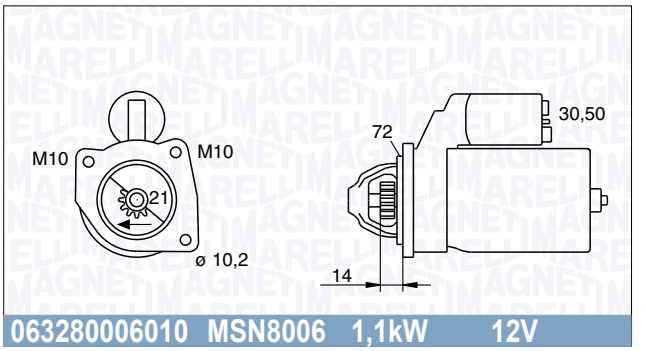

063280006010 MSN8006 1,1kW 12V

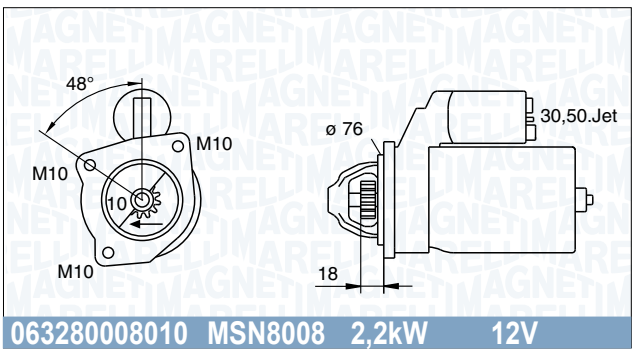

063280008010 MSN8008 2,2kW 12V

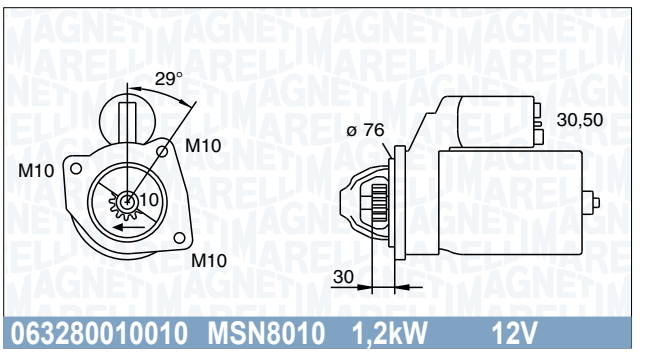

063280010010 MSN8010 1,2kW 12V

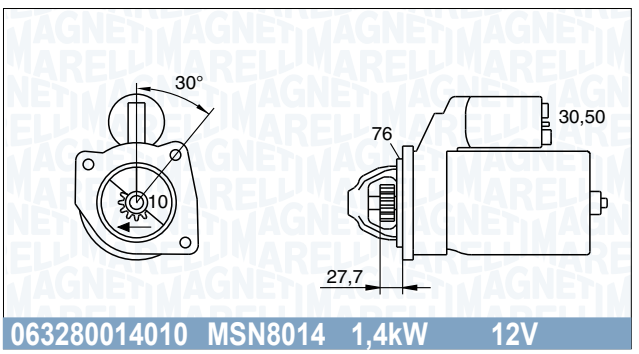

063280014010 MSN8014 1,4kW 12V

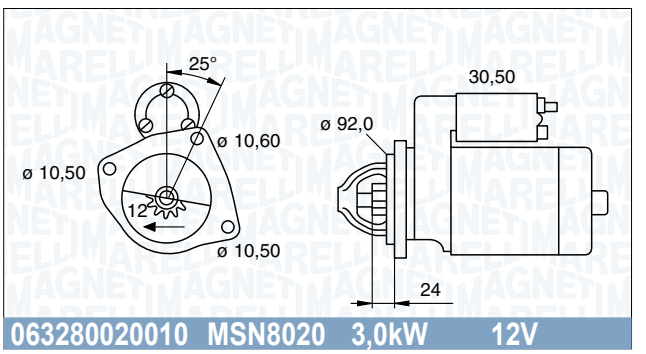

063280020010 MSN8020 3,0kW 12V

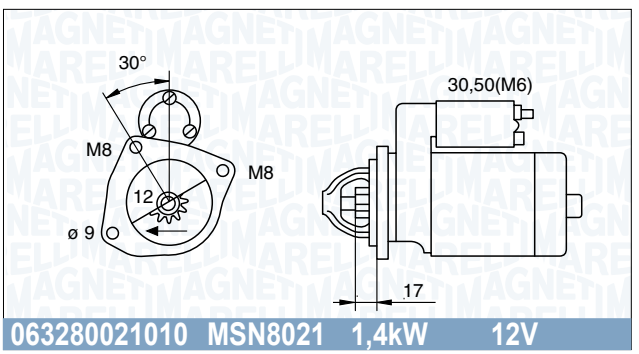

063280021010 MSN8021 1,4kW 12V

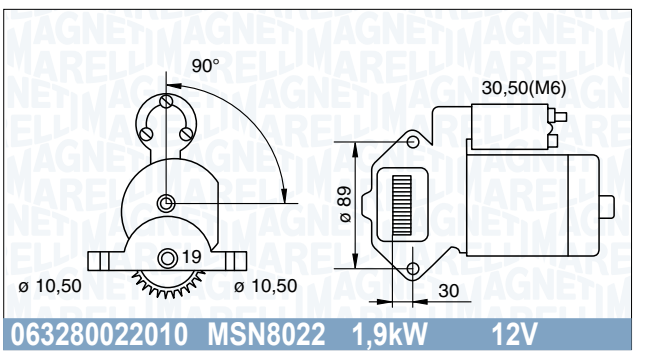

063280022010 MSN8022 1,9kW 12V

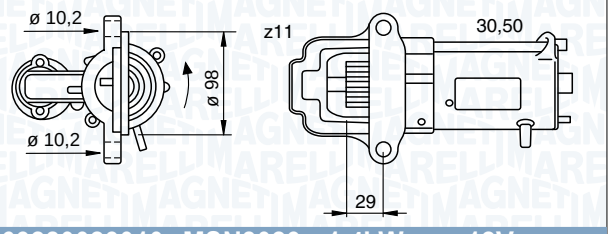

063280023010 MSN8023 1,4kW 12V

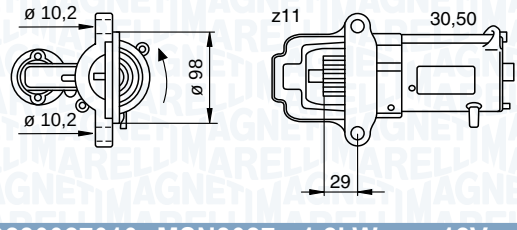

063280027010 MSN8027 1,2kW 12V

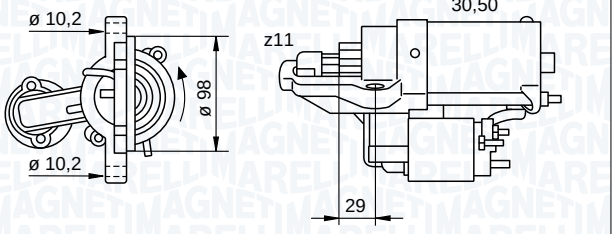

063280028010 MSN8028 1,2kW 12V

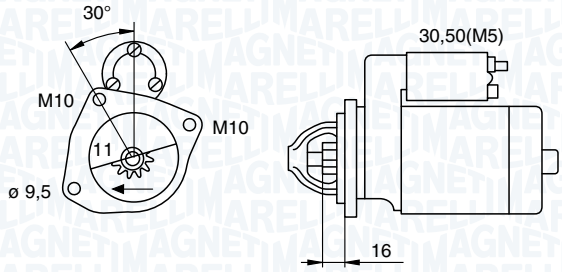

063280029010 MSN8029 1,2kW 12V

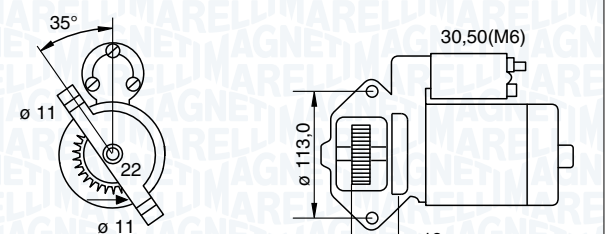

063280031010 MSN8031 2,2kW 12V

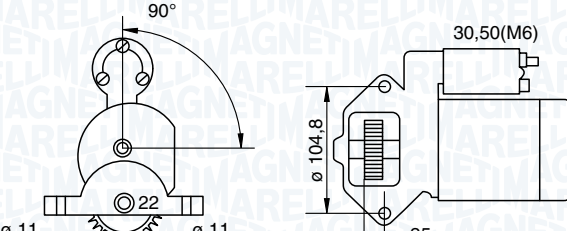

063280032010 MSN8032 1,4kW 12V

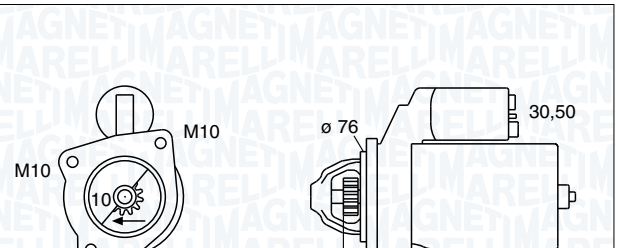

063280034010 MSN8034 1,4kW 12V

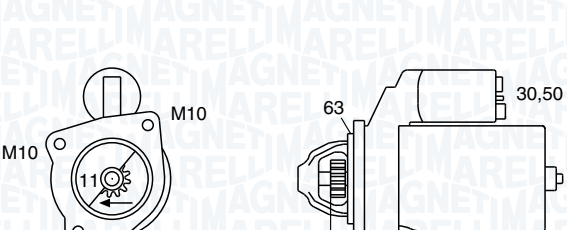

063280036010 MSN8036 2,2kW 12V

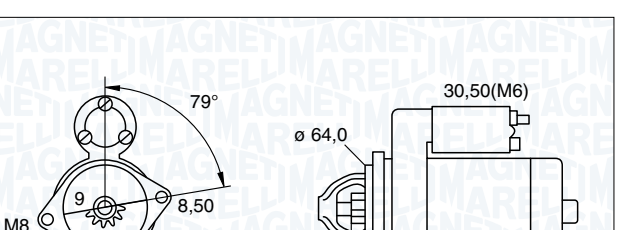

063280045010 MSN8045 1,3kW 12V

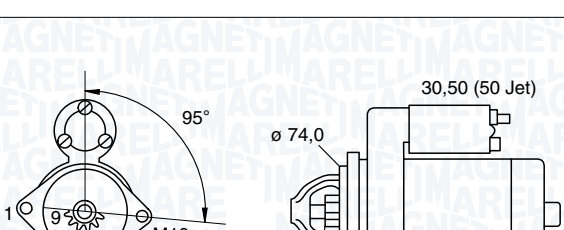

063280048010 MSN8048 1,3kW 12V

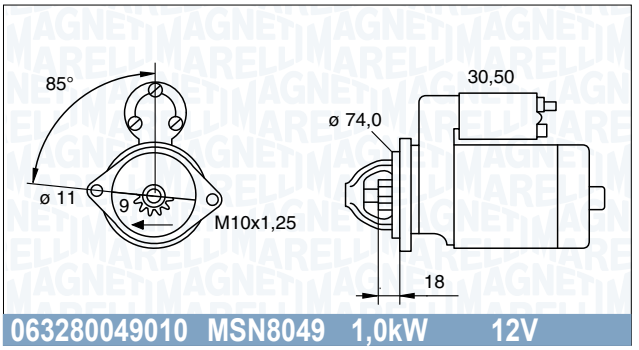

063280049010 MSN8049 1,0kW 12V

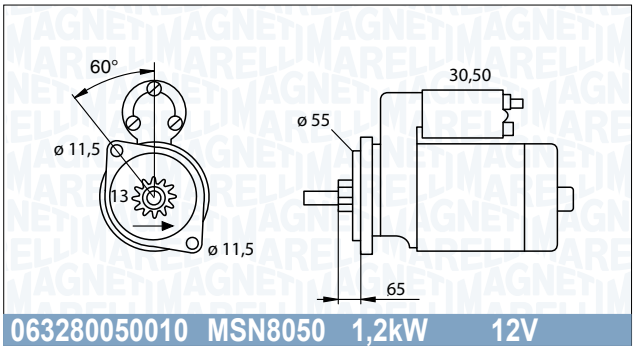

063280050010 MSN8050 1,2kW 12V

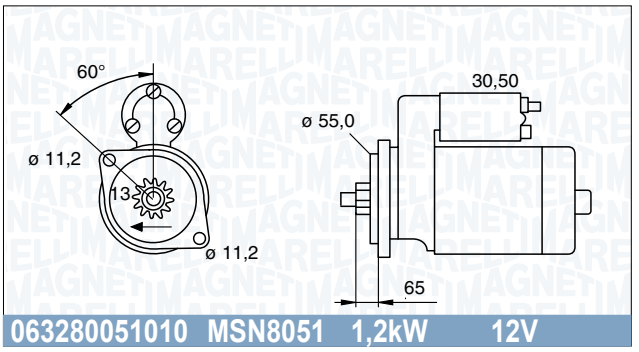

063280051010 MSN8051 1,2kW 12V

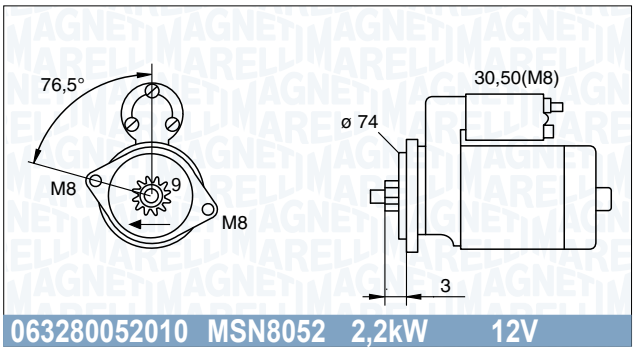

063280052010 MSN8052 2,2kW 12V

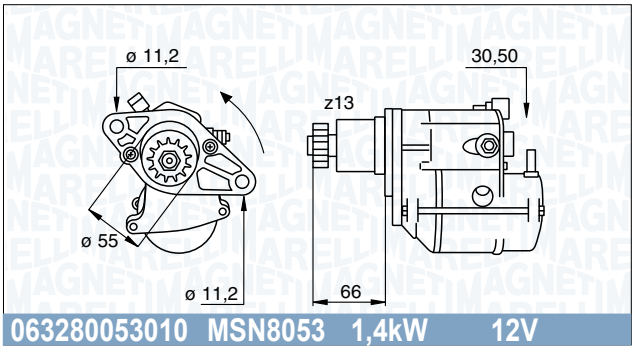

063280053010 MSN8053 1,4kW 12V

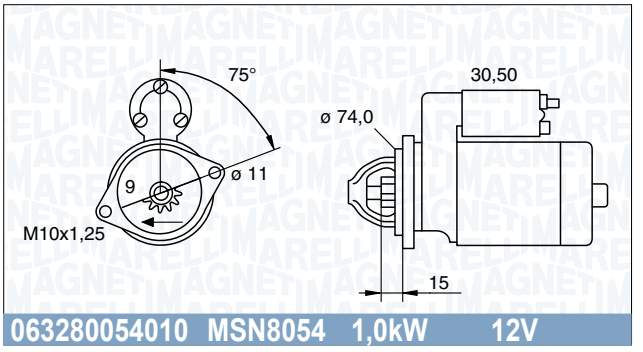

063280054010 MSN8054 1,0kW 12V

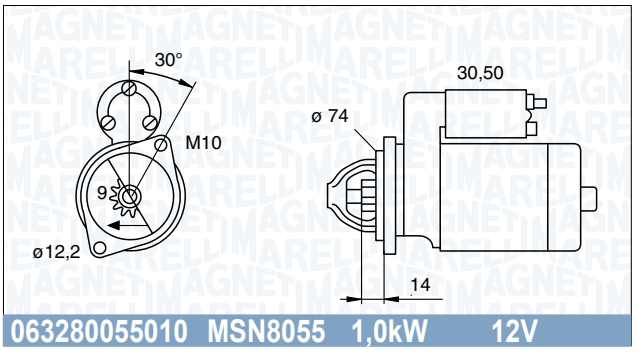

063280055010 MSN8055 1,0kW 12V

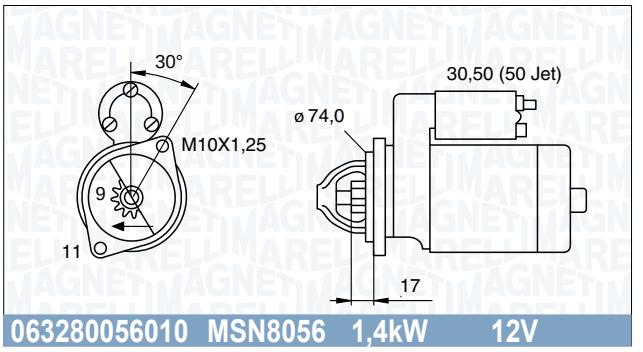

063280056010 MSN8056 1,4kW 12V

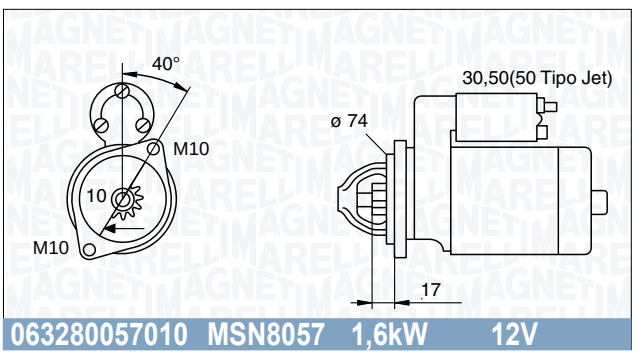

063280057010 MSN8057 1,6kW 12V

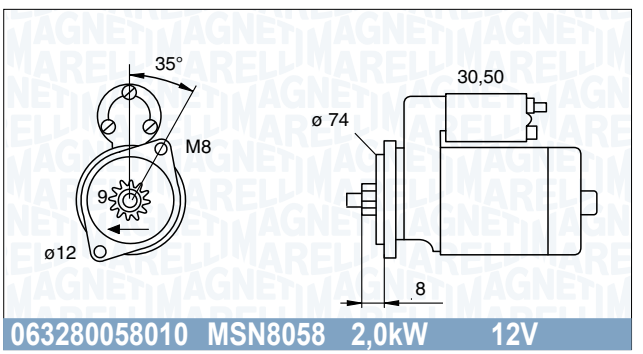

063280058010 MSN8058 2,0kW 12V

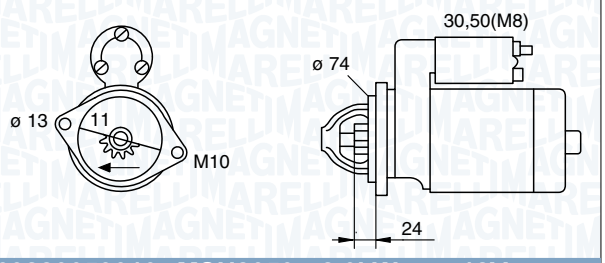

063280059010 MSN8059 2,0kW 12V

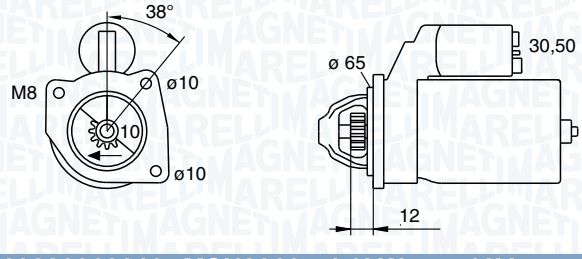

063280060010 MSN8060 1,0kW 12V

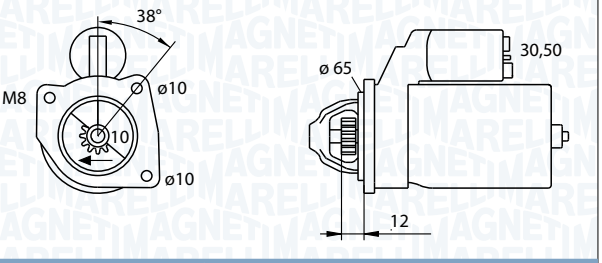

063280061010 MSN8061 1,0kW 12V

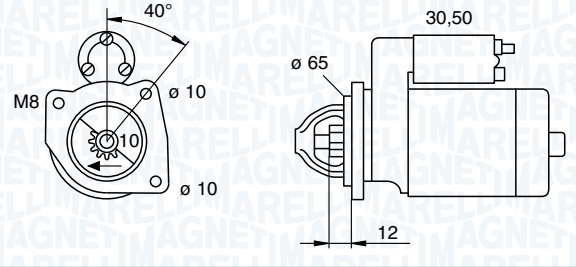

063280062010 MSN8062 1,0kW 12V

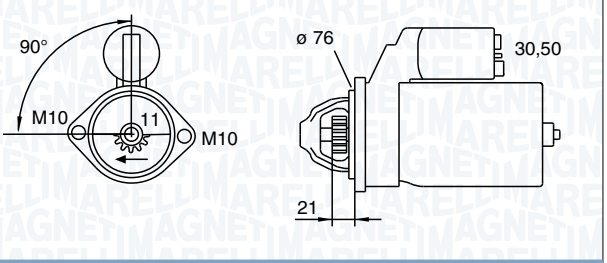

063280071010 MSN8071 2,2kW 12V

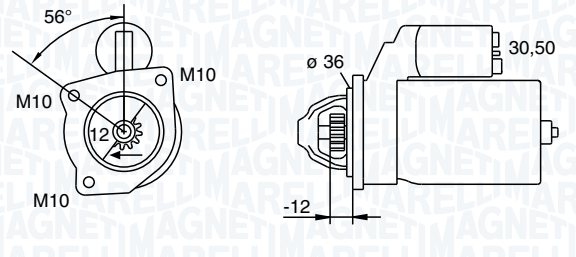

063280090010 MSN8090 2,0kW 12V

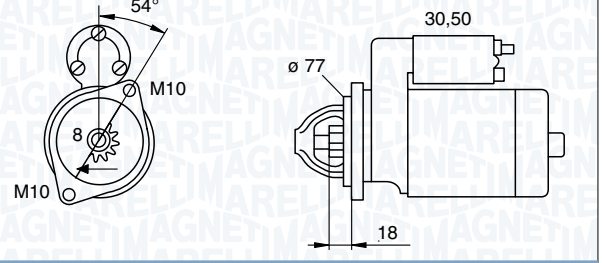

063280901010 MSN882 1,0kW 12V

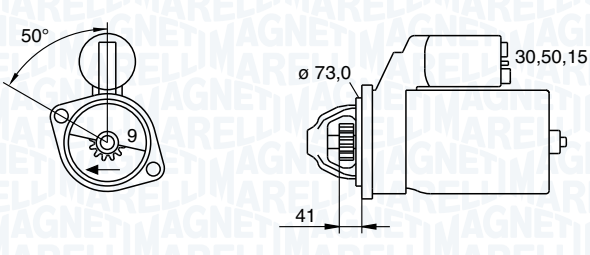

063280902010 MSN883 1,0kW 12V

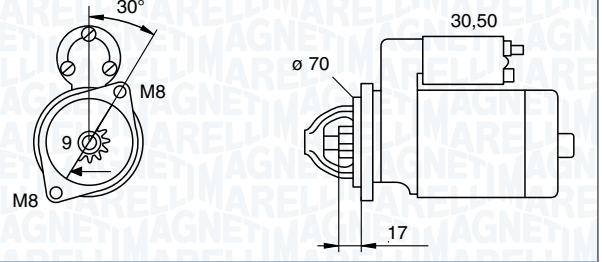

063296842010 MSN886 3,5kW 12V

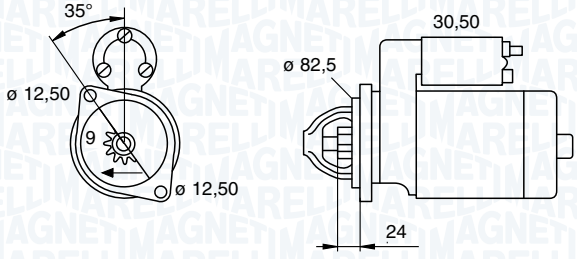

063296843010 MSN887 3,5kW 12V

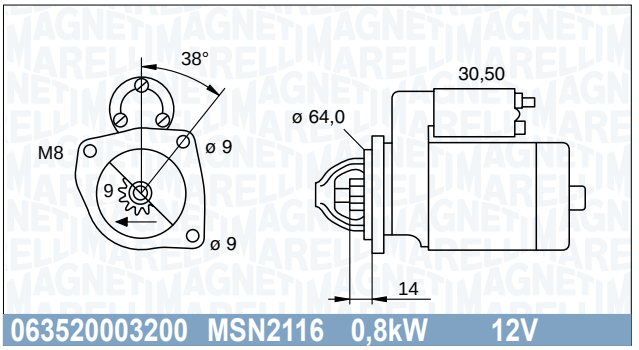

063520003200 MSN2116 0,8kW 12V

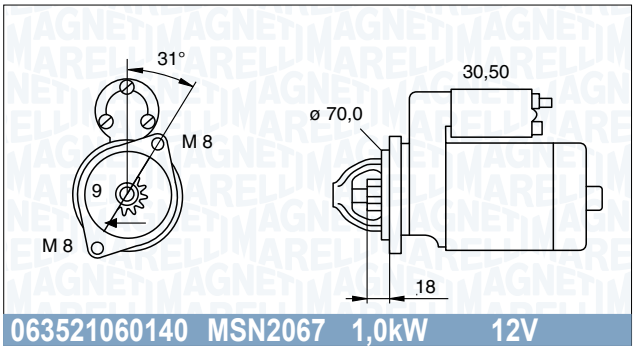

063521060140 MSN2067 1,0kW 12V

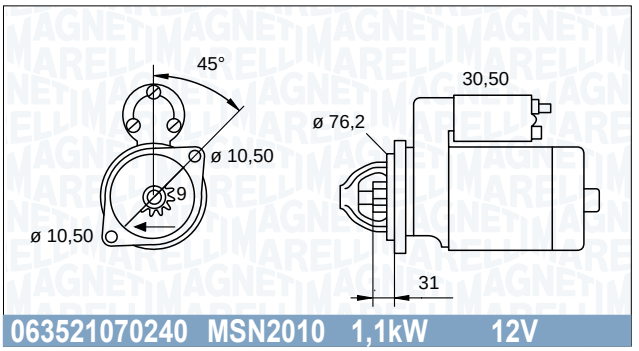

063521070240 MSN2010 1,1kW 12V

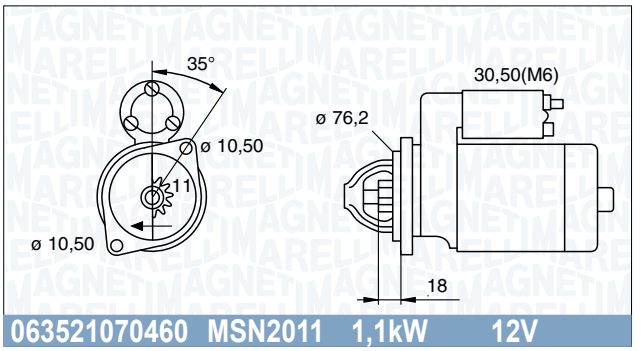

063521070460 MSN2011 1,1kW 12V

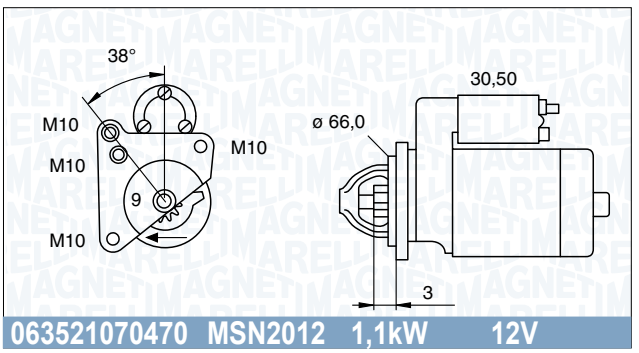

063521070470 MSN2012 1,1kW 12V

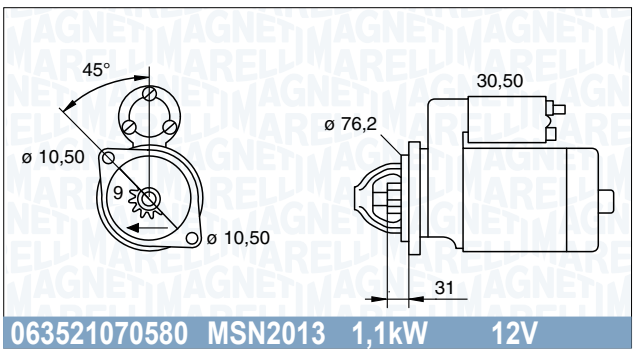

063521070580 MSN2013 1,1kW 12V

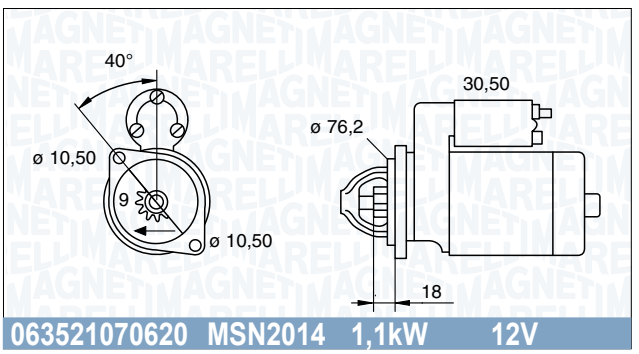

063521070620 MSN2014 1,1kW 12V

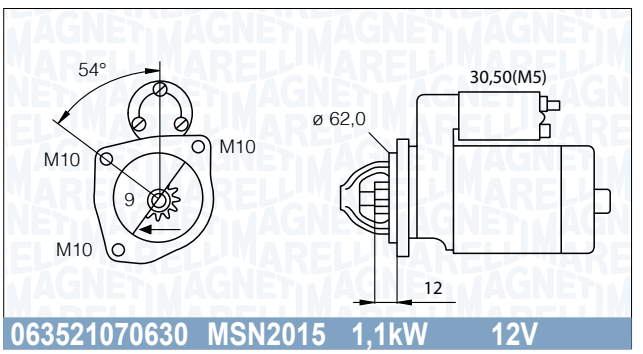

063521070630 MSN2015 1,1kW 12V

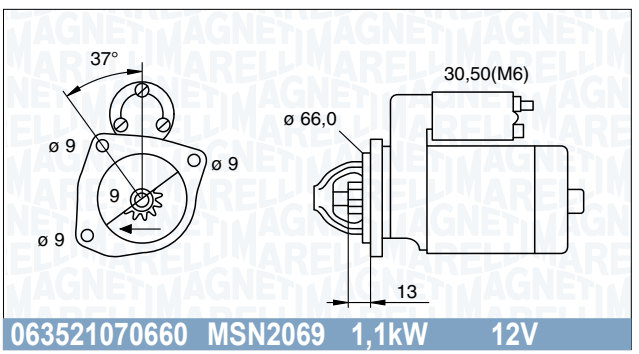

063521070660 MSN2069 1,1kW 12V

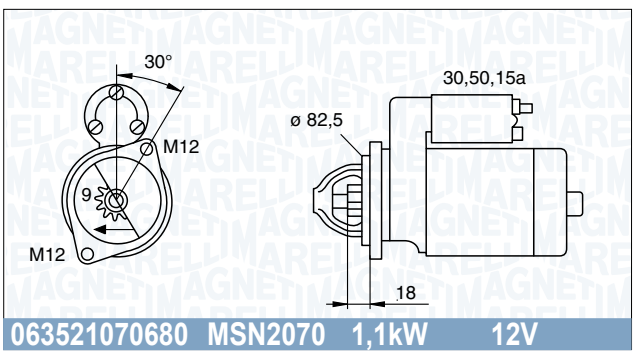

063521070680 MSN2070 1,1kW 12V

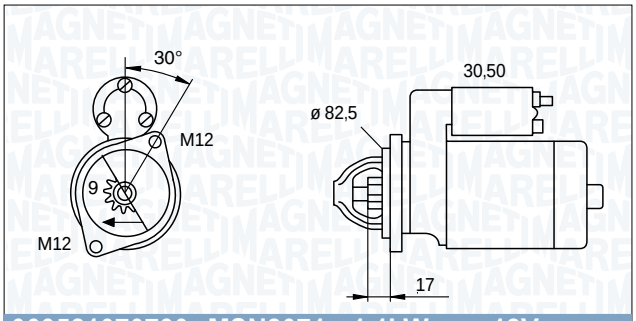

063521070730 MSN2071 1,1kW 12V

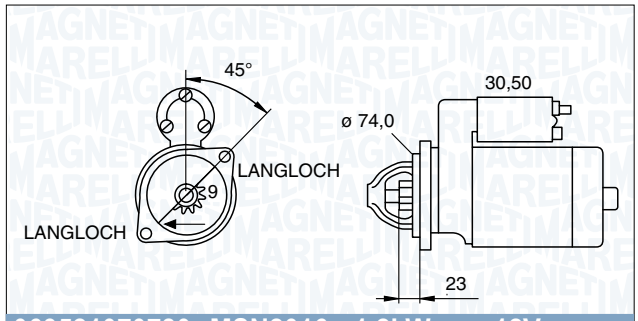

063521070780 MSN2016 1,2kW 12V

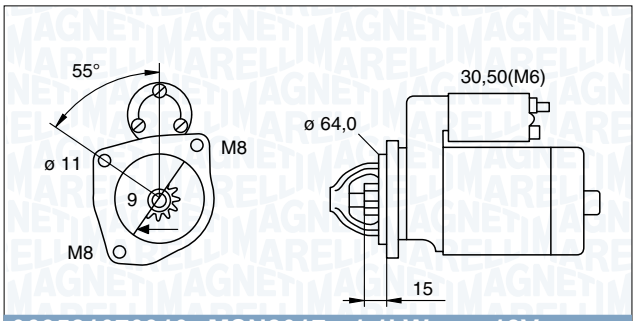

063521070910 MSN2017 1,1kW 12V

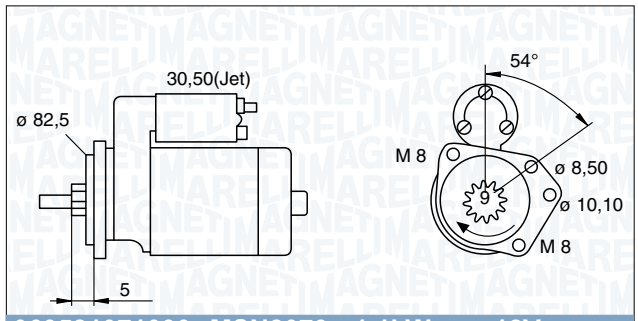

063521071030 MSN2073 1,1kW 12V

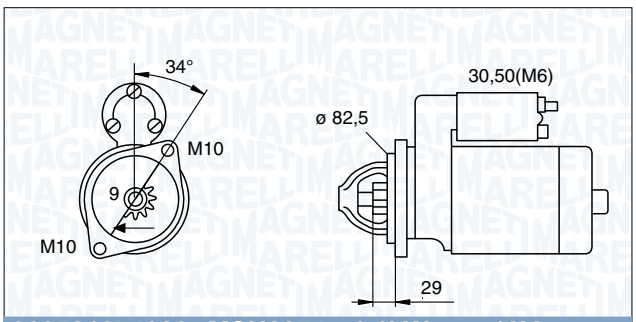

063521074030 MSN2074 1,1kW 12V

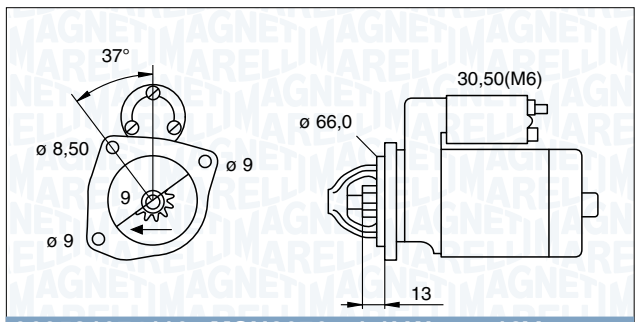

063521074110 MSN2076 1,1kW 12V

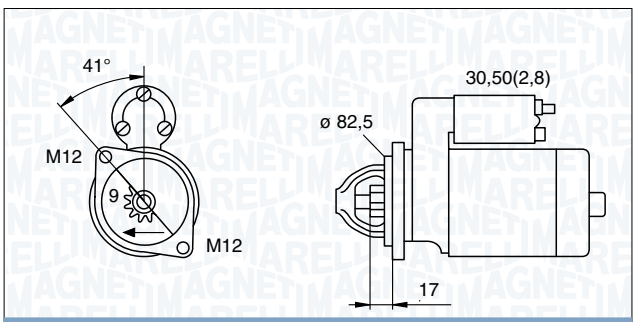

063521074270 MSN2077 1,2kW 12V

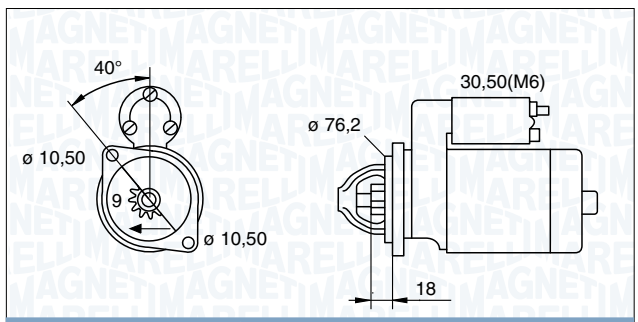

063521074300 MSN2018 1,1kW 12V

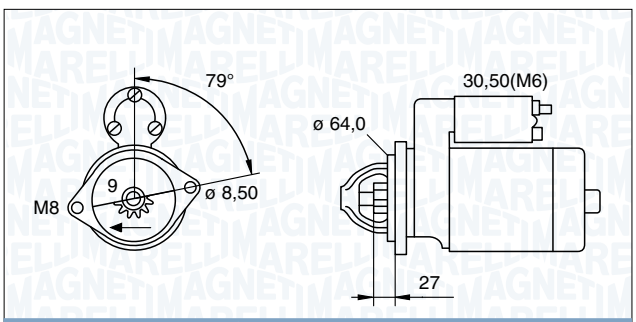

063521074370 MSN2078 1,1kW 12V

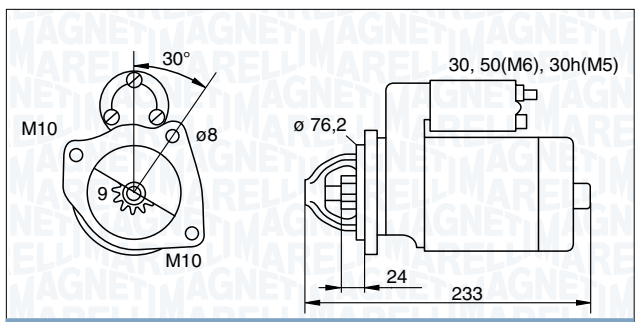

063521074420 MSN2019 1,4kW 12V

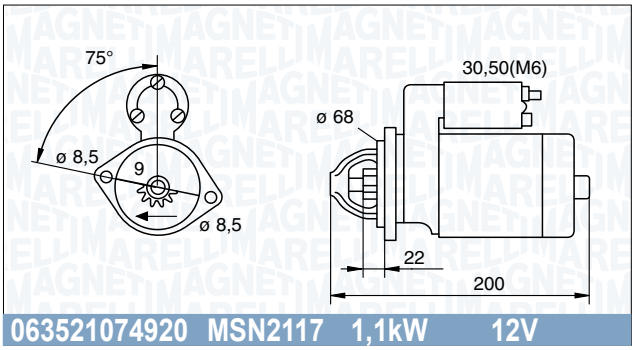

063521074920 MSN2117 1,1kW 12V

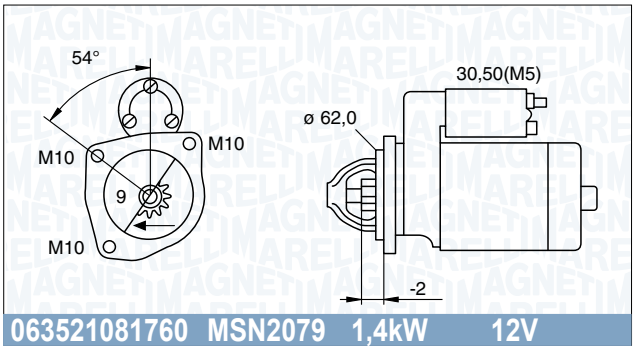

063521081760 MSN2079 1,4kW 12V

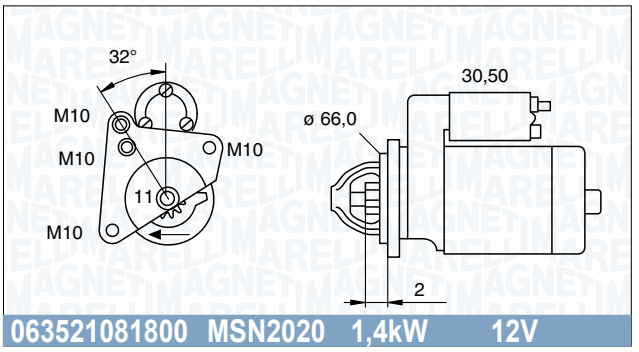

063521081800 MSN2020 1,4kW 12V

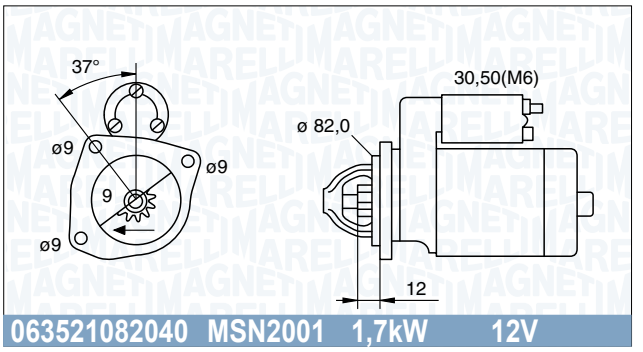

063521082040 MSN2001 1,7kW 12V

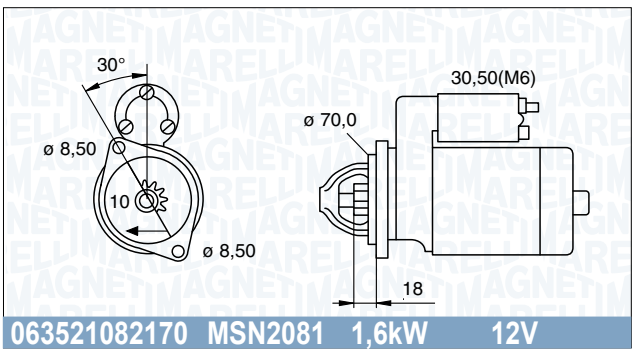

063521082170 MSN2081 1,6kW 12V

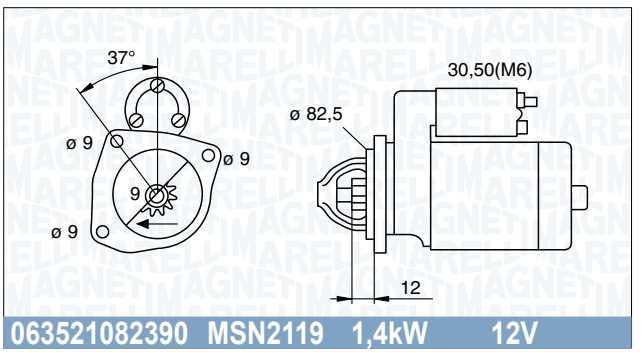

063521082390 MSN2119 1,4kW 12V

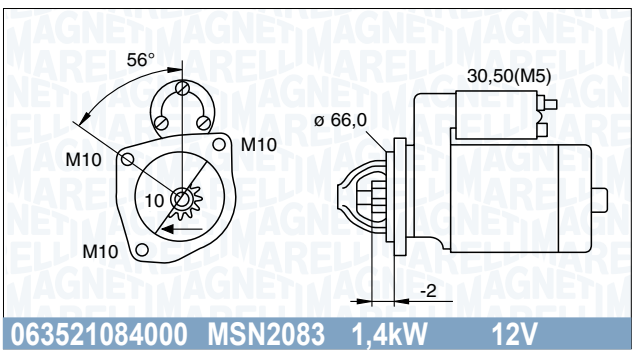

063521084000 MSN2083 1,4kW 12V

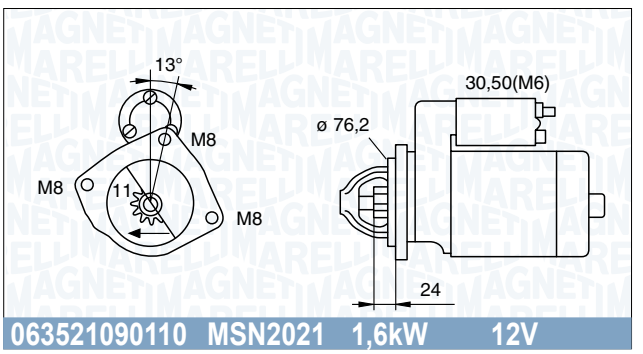

063521090110 MSN2021 1,6kW 12V

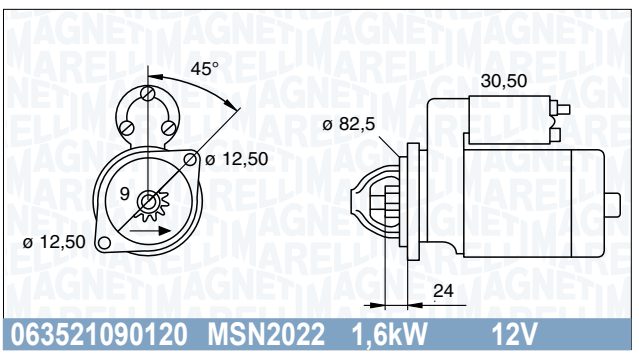

063521090120 MSN2022 1,6kW 12V

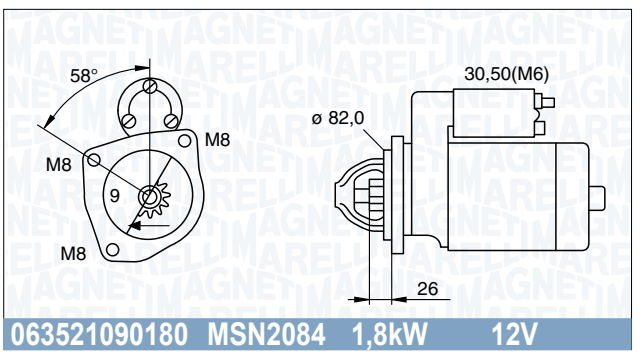

063521090180 MSN2084 1,8kW 12V

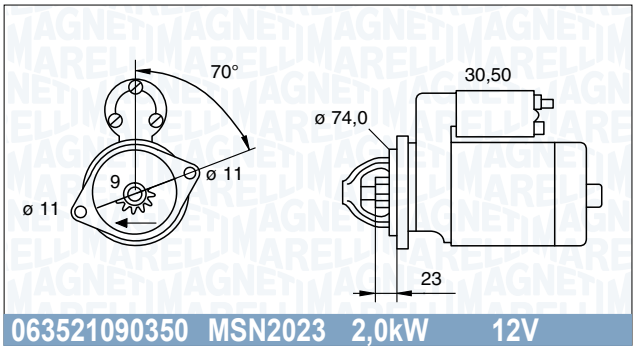

063521090350 MSN2023 2,0kW 12V

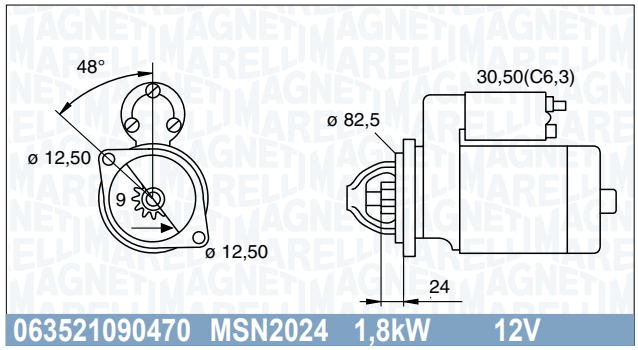

063521090470 MSN2024 1,8kW 12V

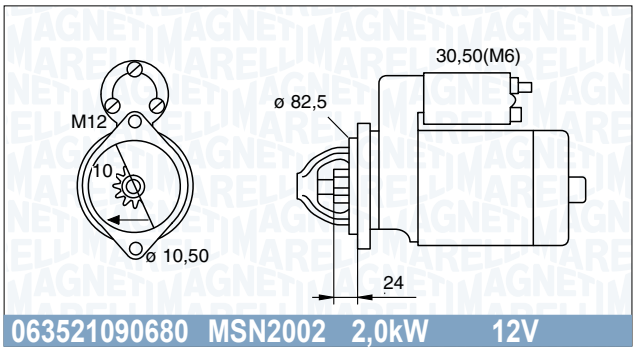

063521090680 MSN2002 2,0kW 12V

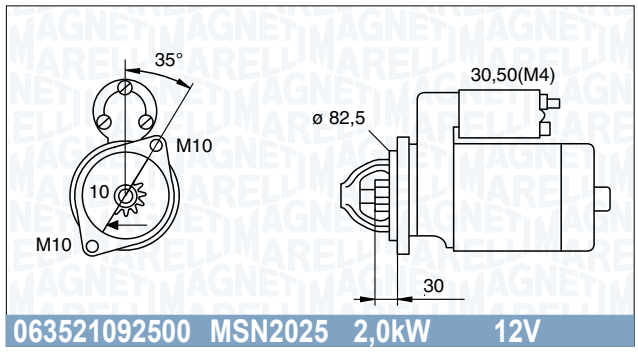

063521092500 MSN2025 2,0kW 12V

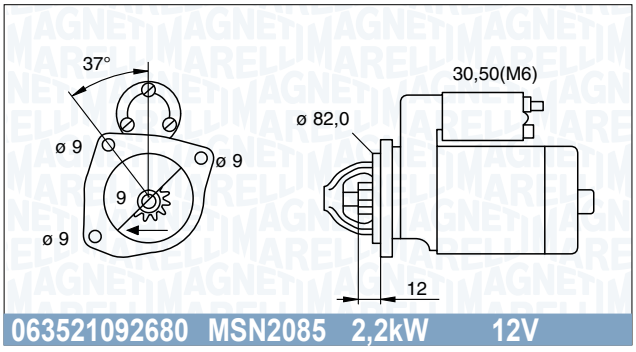

063521092680 MSN2085 2,2kW 12V

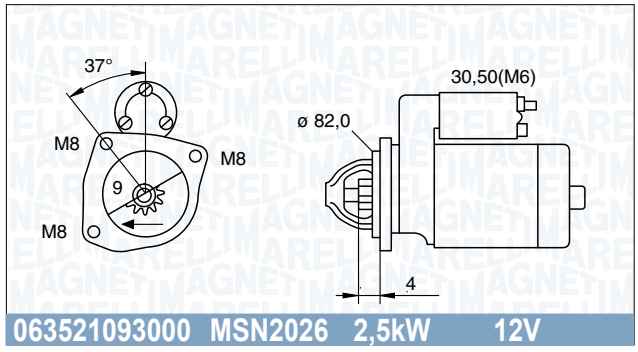

063521093000 MSN2026 2,5kW 12V

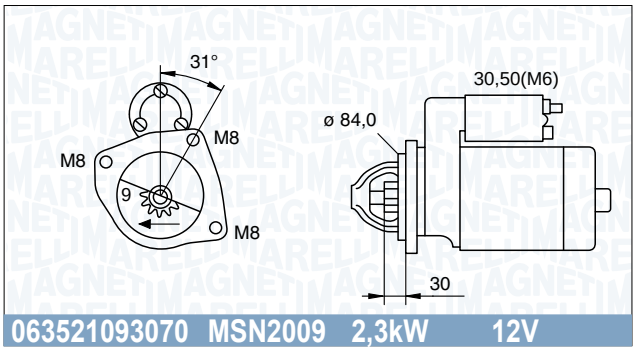

063521093070 MSN2009 2,3kW 12V

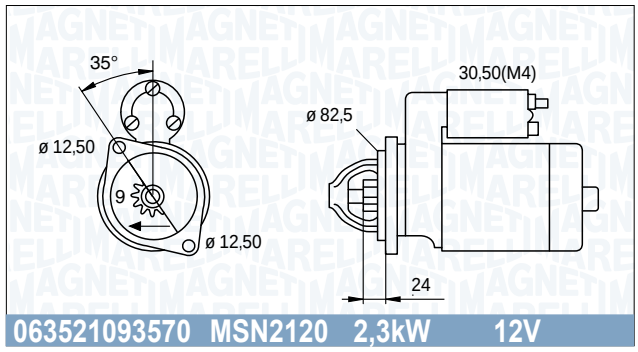

063521093570 MSN2120 2,3kW 12V

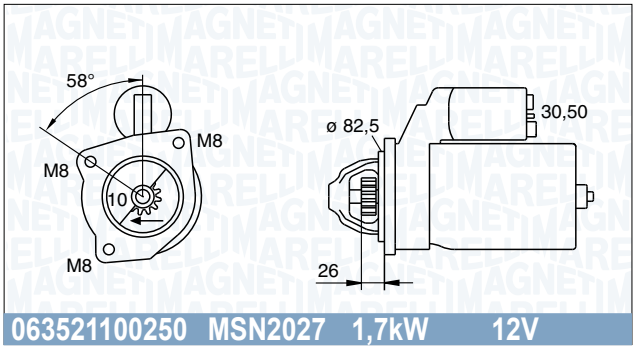

063521100250 MSN2027 1,7kW 12V

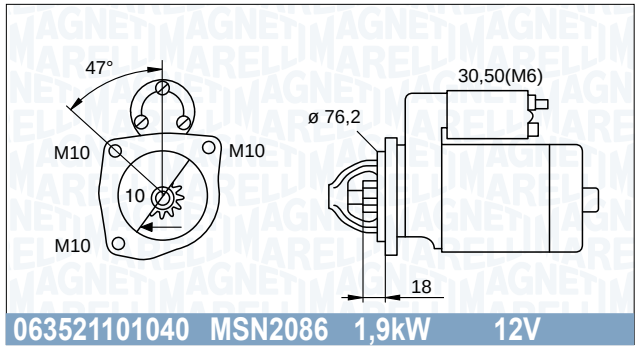

063521101040 MSN2086 1,9kW 12V

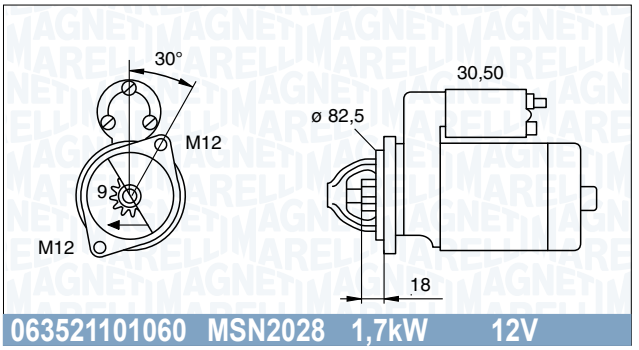

063521101060 MSN2028 1,7kW 12V

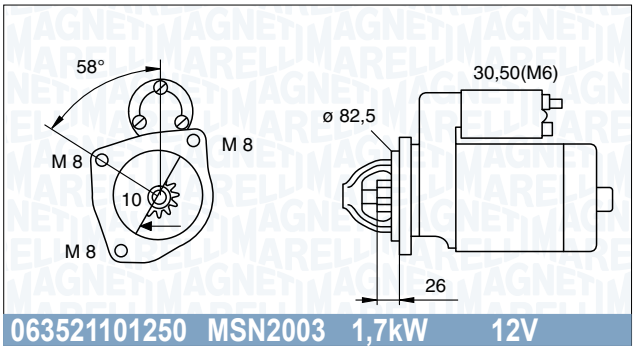

063521101250 MSN2003 1,7kW 12V

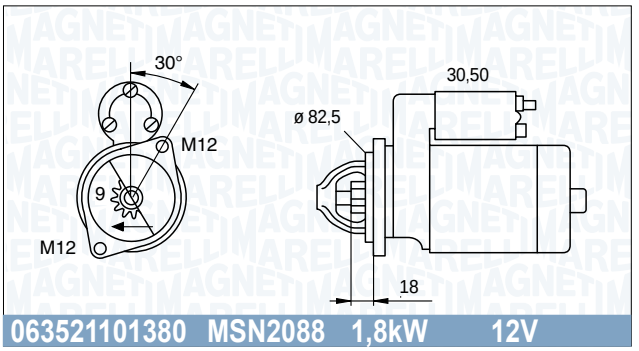

063521101380 MSN2088 1,8kW 12V

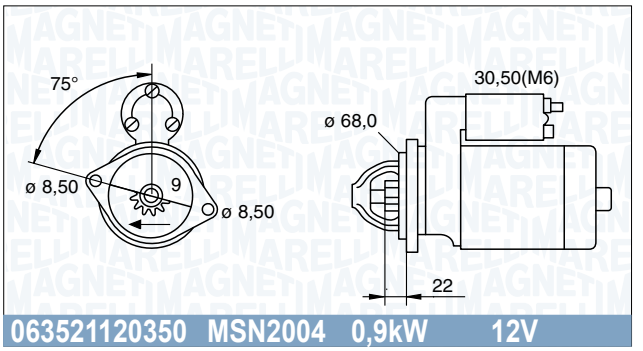

063521120350 MSN2004 0,9kW 12V

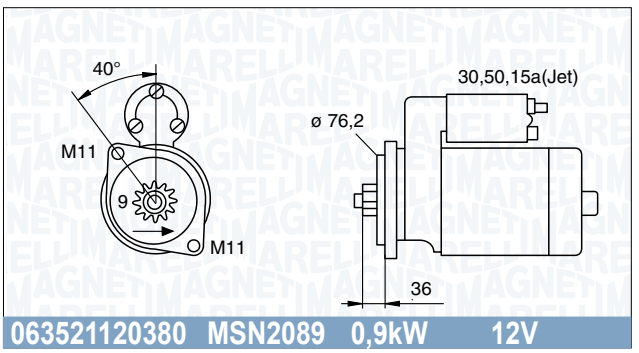

063521120380 MSN2089 0,9kW 12V

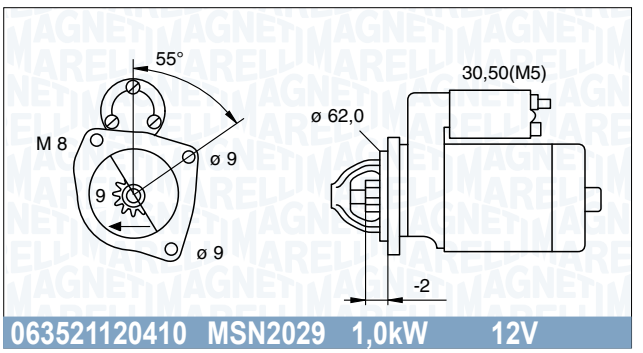

063521120410 MSN2029 1,0kW 12V

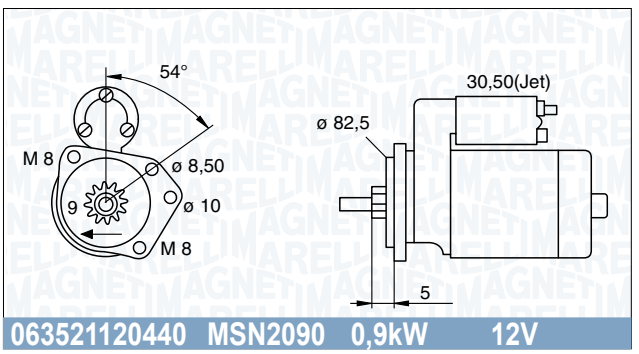

063521120440 MSN2090 0,9kW 12V

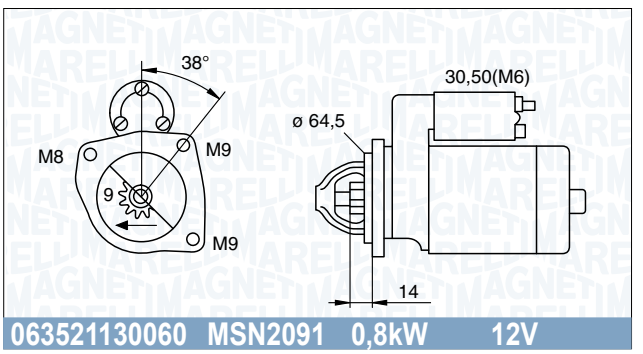

063521130060 MSN2091 0,8kW 12V

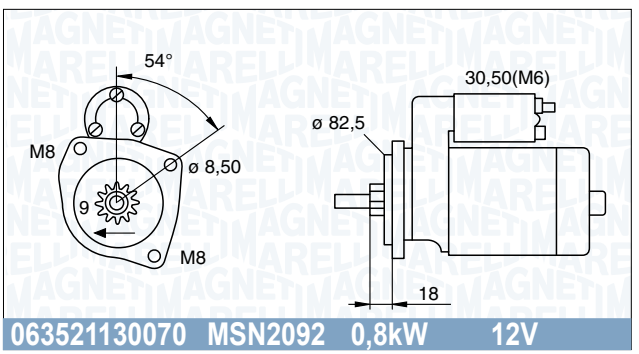

063521130070 MSN2092 0,8kW 12V

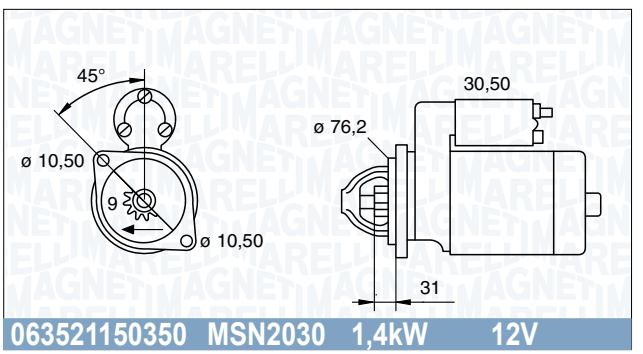

063521150350 MSN2030 1,4kW 12V

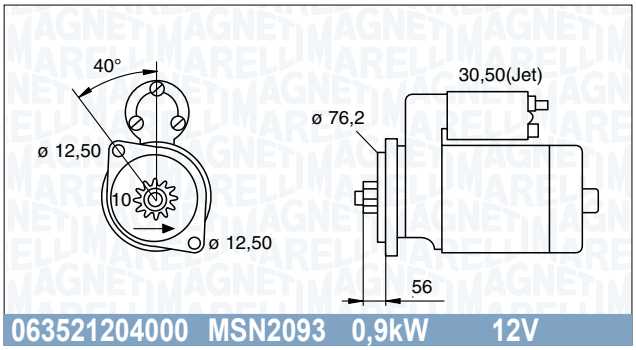

063521204000 MSN2093 0,9kW 12V

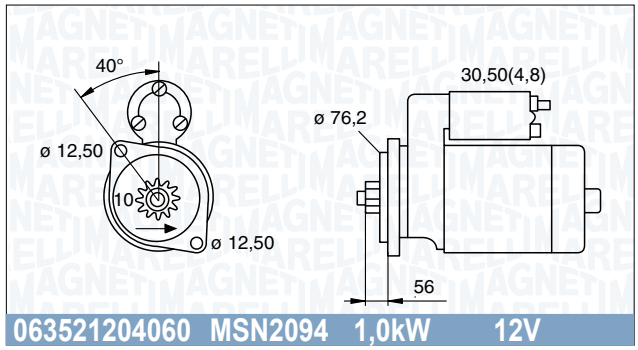

063521204060 MSN2094 1,0kW 12V

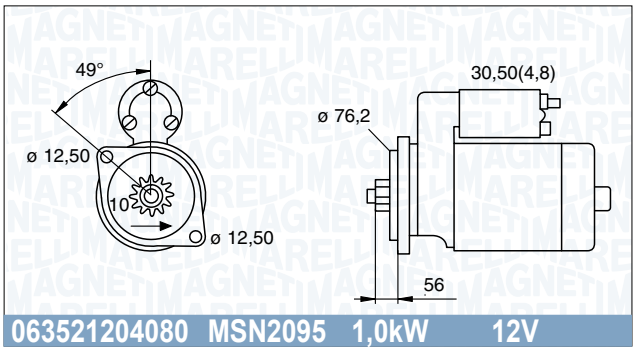

063521204080 MSN2095 1,0kW 12V

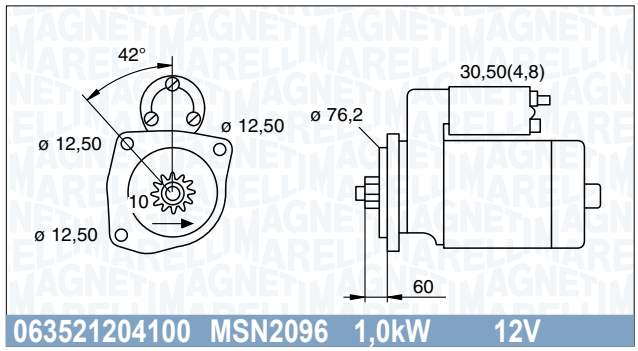

063521204100 MSN2096 1,0kW 12V

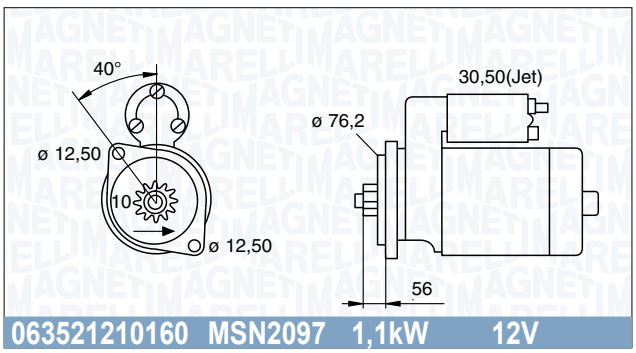

063521210160 MSN2097 1,1kW 12V

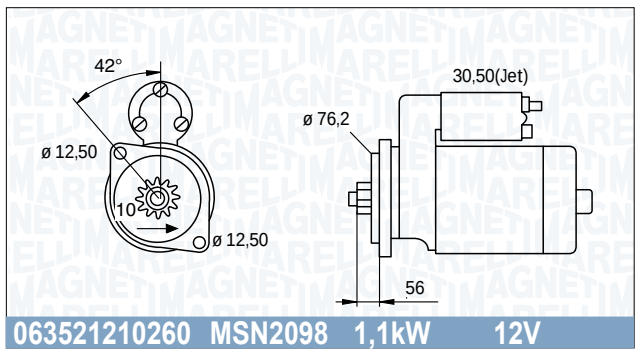

063521210260 MSN2098 1,1kW 12V

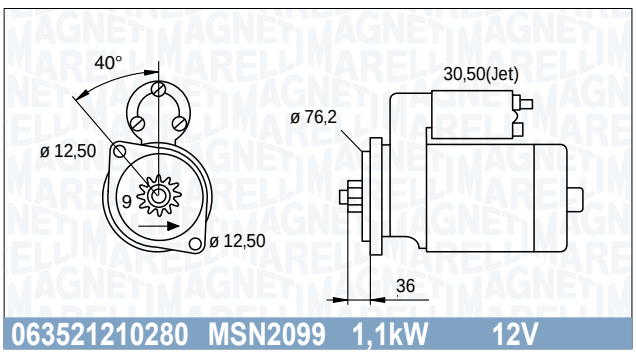

063521210280 MSN2099 1,1kW 12V

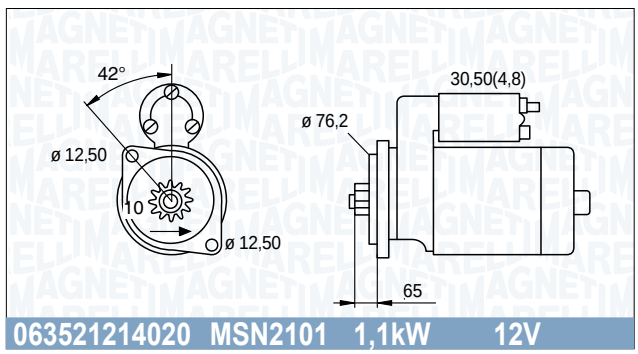

063521214020 MSN2101 1,1kW 12V

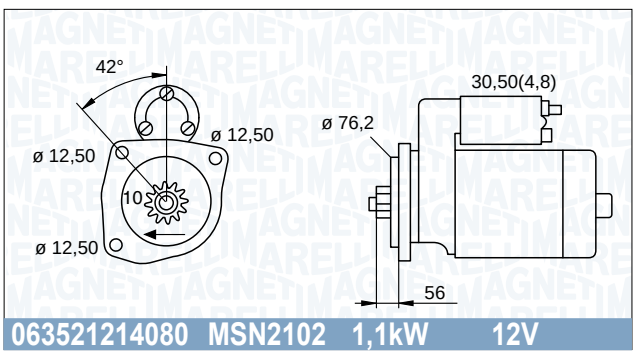

063521214080 MSN2102 1,1kW 12V

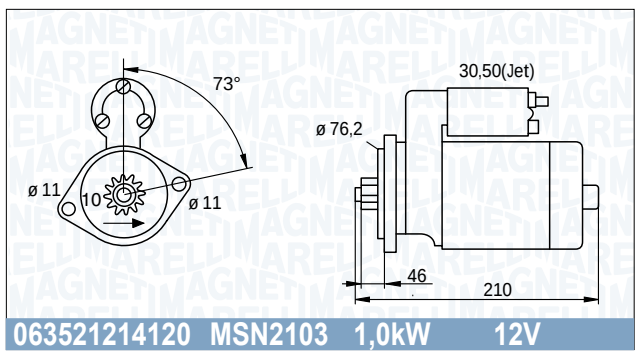

063521214120 MSN2103 1,0kW 12V

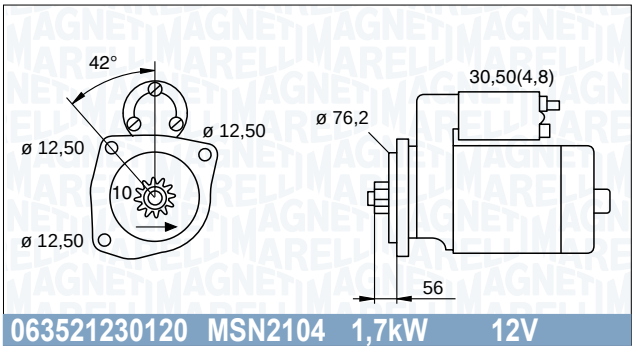

063521230120 MSN2104 1,7kW 12V

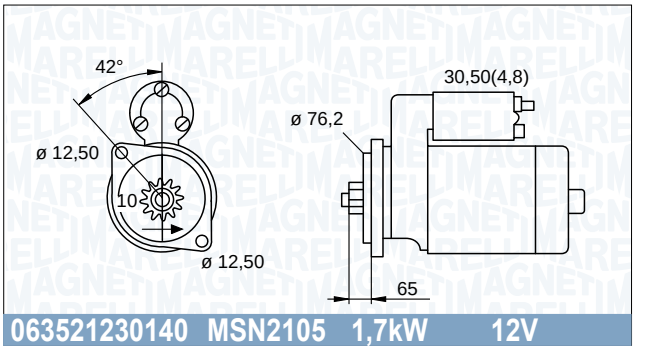

063521230140 MSN2105 1,7kW 12V

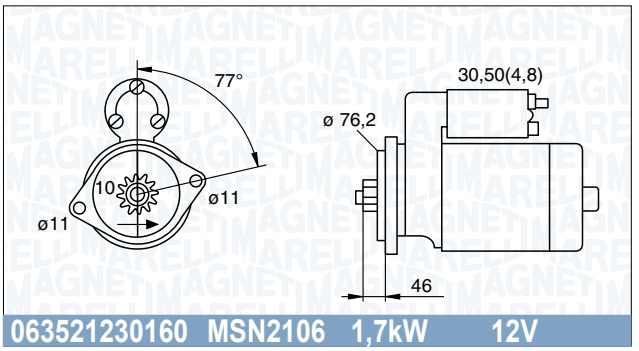

063521230160 MSN2106 1,7kW 12V

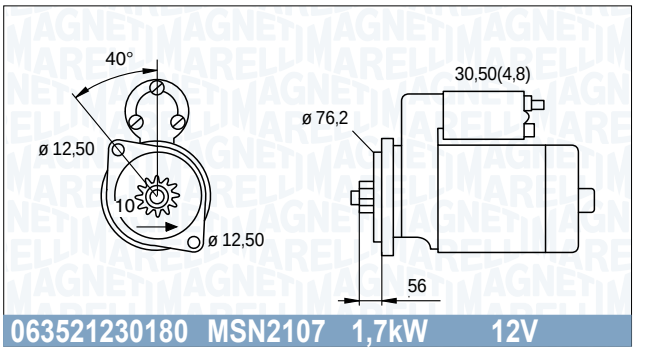

063521230180 MSN2107 1,7kW 12V

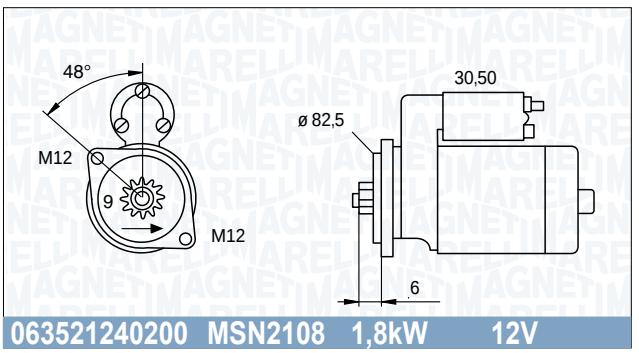

063521240200 MSN2108 1,8kW 12V

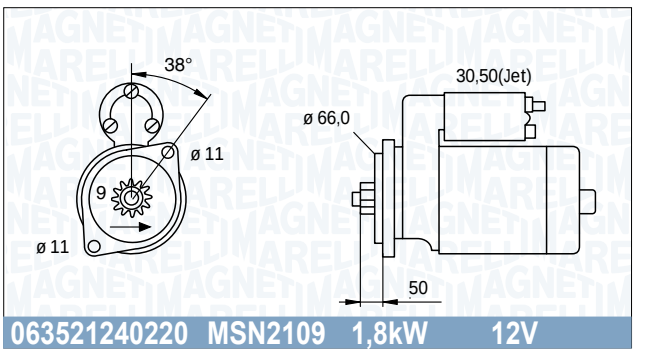

063521240220 MSN2109 1,8kW 12V

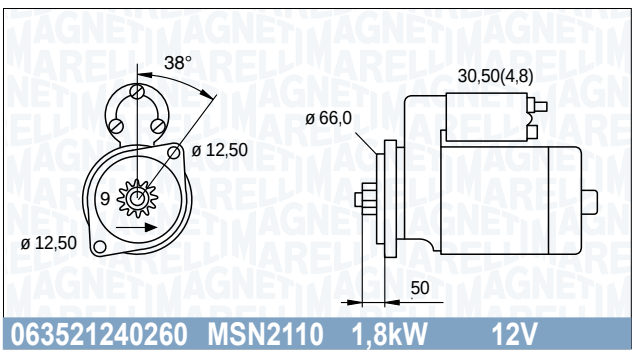

063521240260 MSN2110 1,8kW 12V

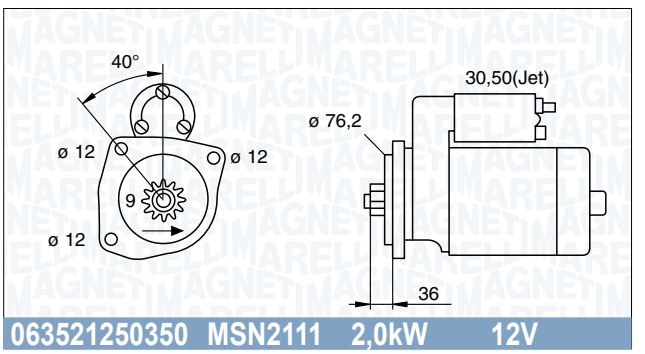

063521250350 MSN2111 2,0kW 12V

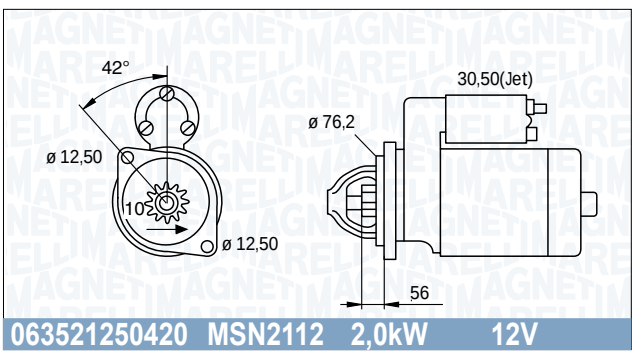

063521250420 MSN2112 2,0kW 12V

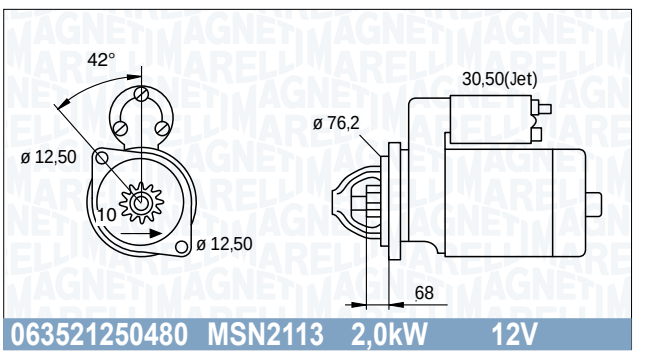

063521250480 MSN2113 2,0kW 12V

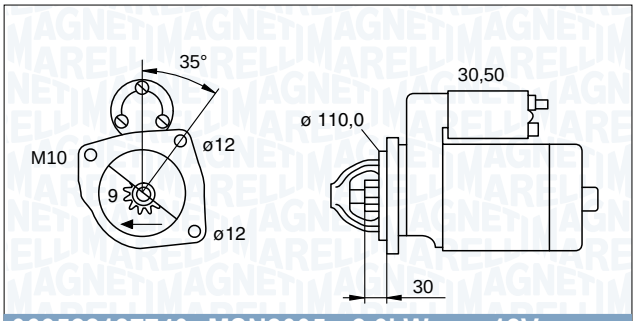

063522187740 MSN2005 2,3kW 12V

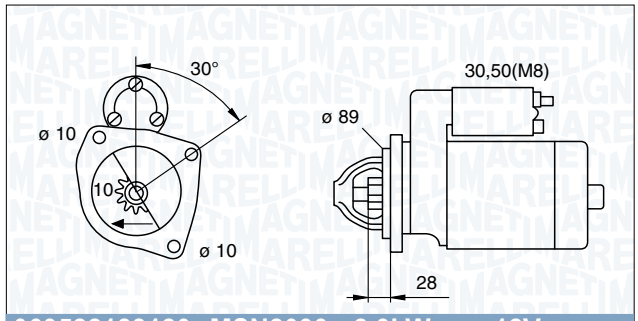

063522188120 MSN2033 2,3kW 12V

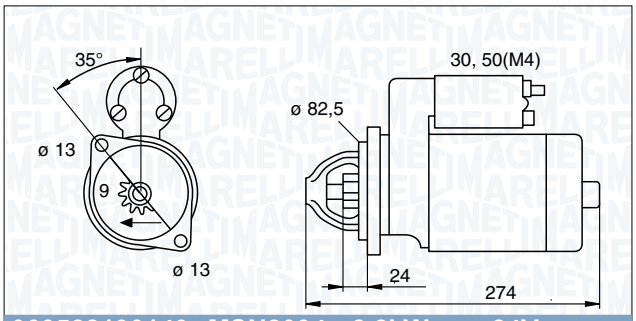

063522190140 MSN2034 2,2kW 24V

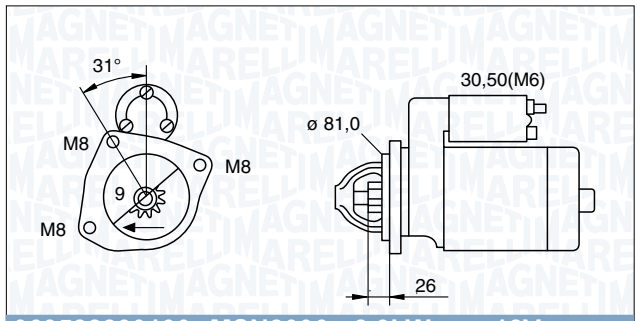

063522230130 MSN2006 2,3kW 12V

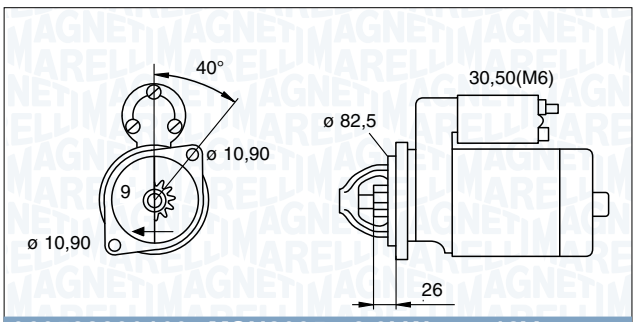

063522230160 MSN2035 2,3kW 12V

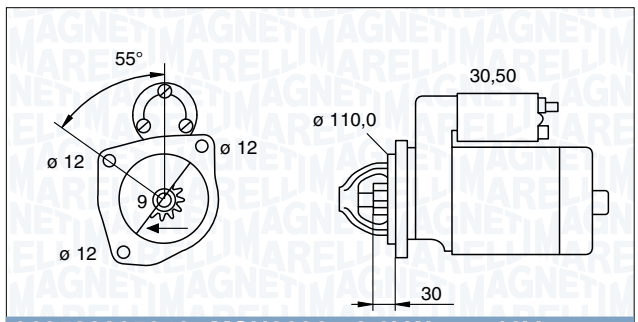

063522235040 MSN2036 2,6kW 12V

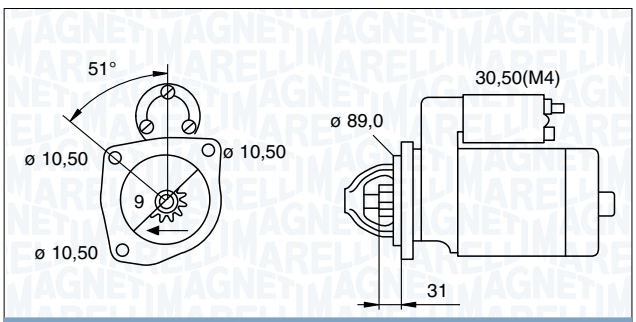

063522300060 MSN2038 3,0kW 12V

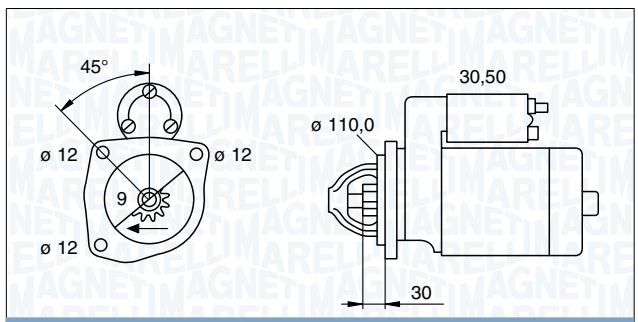

063522300070 MSN2039 3,0kW 12V

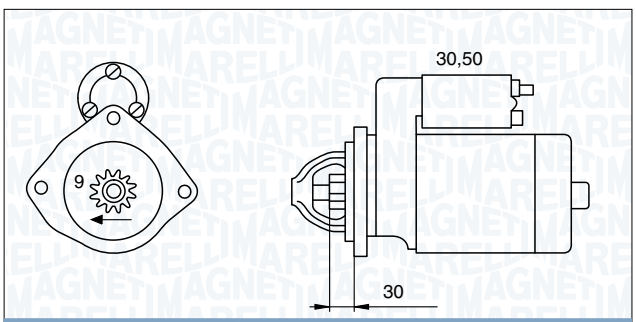

063522300090 MSN2040 3,0kW 12V

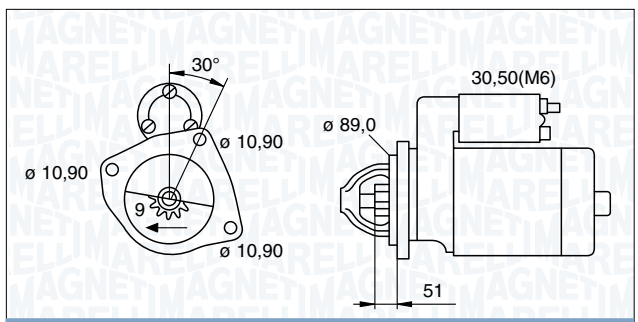

063522310030 MSN2042 4,0kW 24V

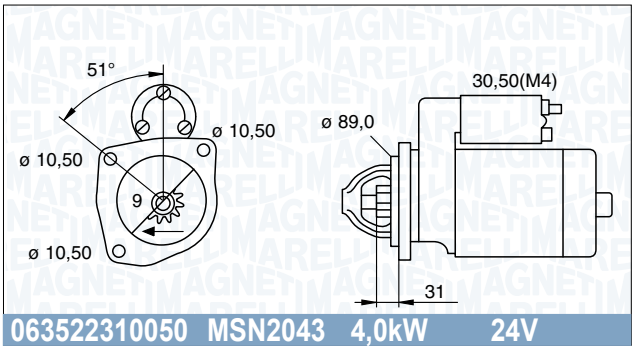

063522310050 MSN2043 4,0kW 24V

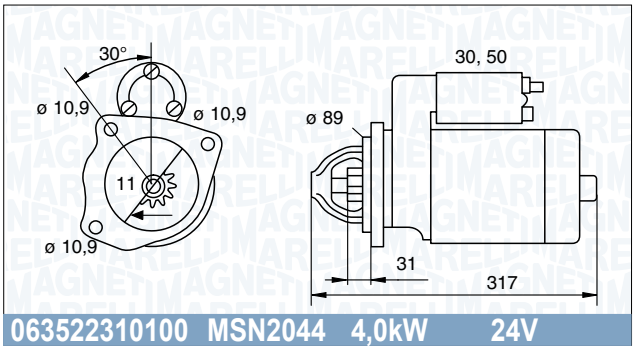

063522310100 MSN2044 4,0kW 24V

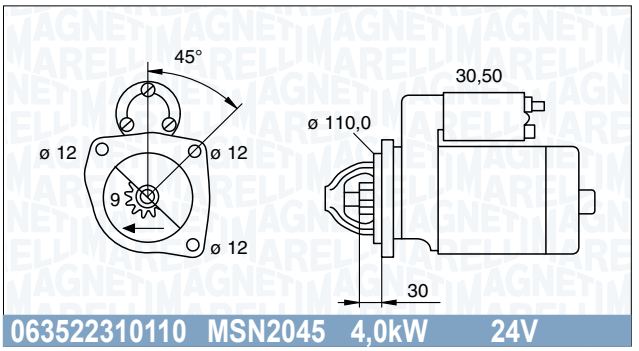

063522310110 MSN2045 4,0kW 24V

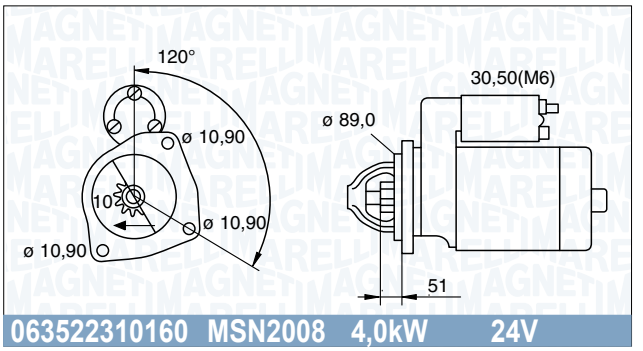

063522310160 MSN2008 4,0kW 24V

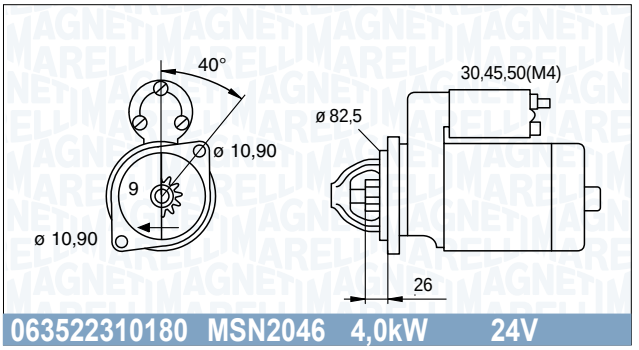

063522310180 MSN2046 4,0kW 24V

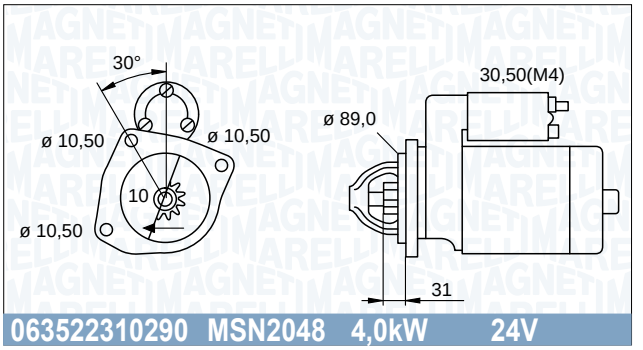

063522310290 MSN2048 4,0kW 24V

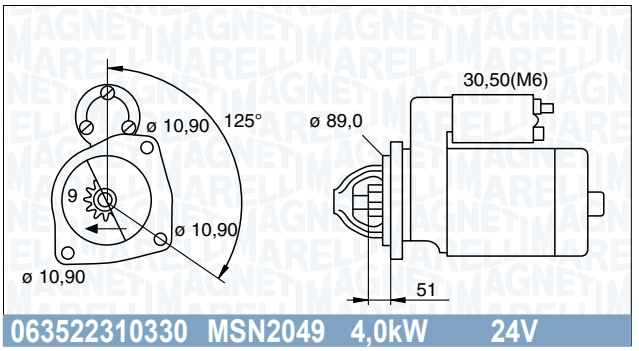

063522310330 MSN2049 4,0kW 24V

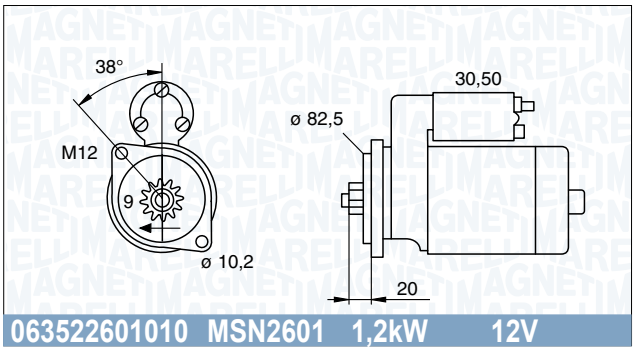

063522601010 MSN2601 1,2kW 12V

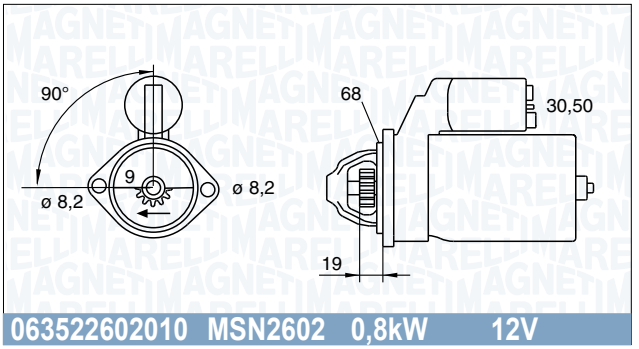

063522602010 MSN2602 0,8kW 12V

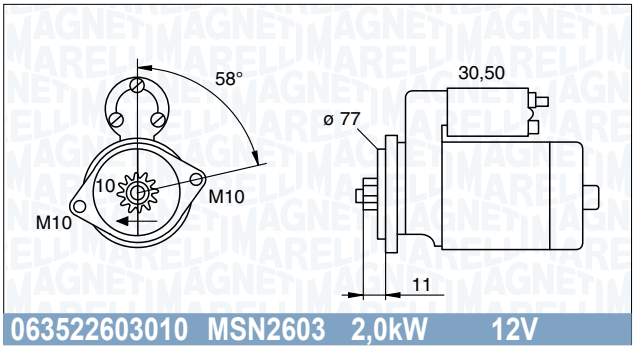

063522603010 MSN2603 2,0kW 12V

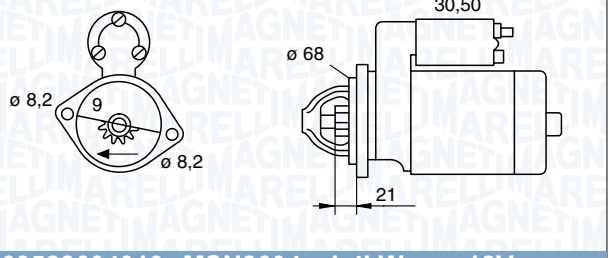

063522604010 MSN2604 1,4kW 12V

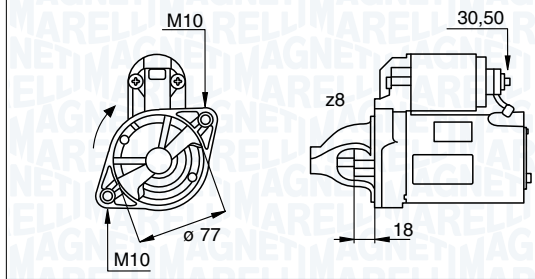

063522605010 MSN2605 0,9kW 12V

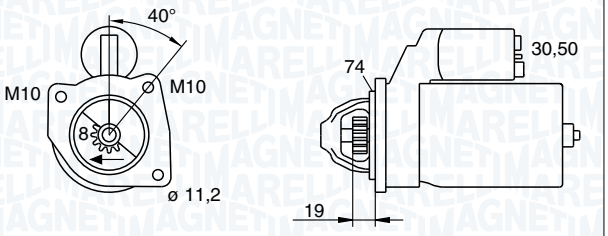

063522606010 MSN2606 0,85kW 12V

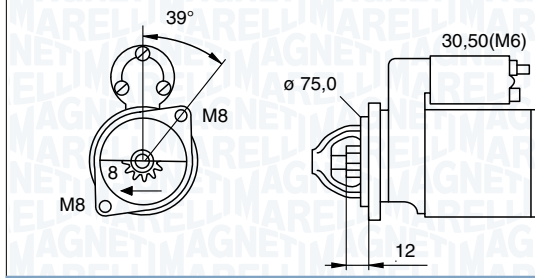

063522607010 MSN2607 0,8kW 12V

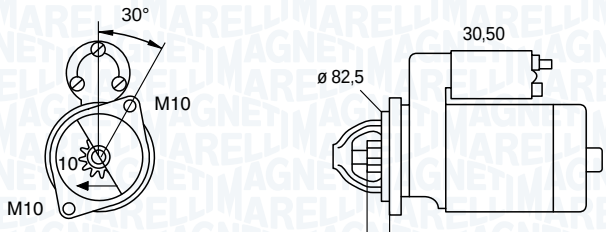

063522608010 MSN2608 2,2kW 12V

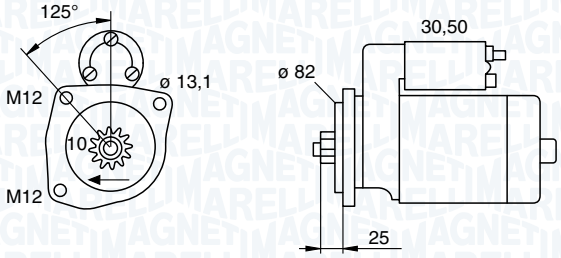

063522609010 MSN2609 2,0kW 12V

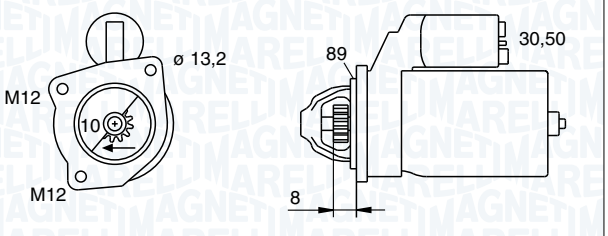

063522610010 MSN2610 2,0kW 12V

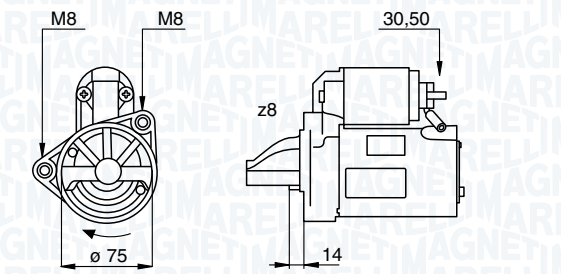

063522611010 MSN2611 0,9kW 12V

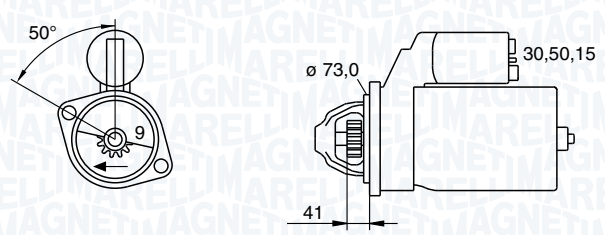

063522612010 MSN2612 1,5kW 12V

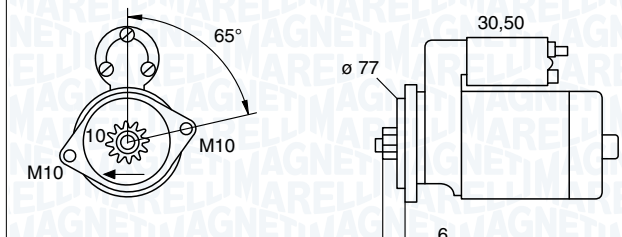

063522613010 MSN2613 2,0kW 12V

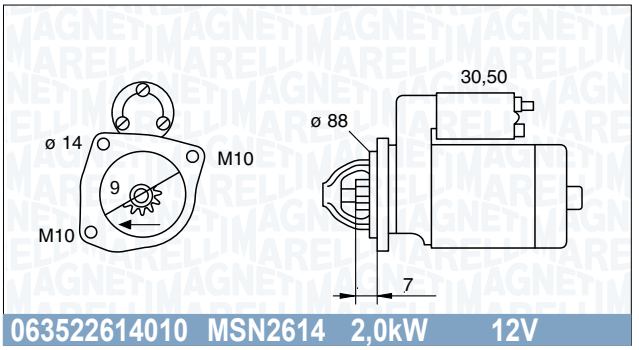

063522614010 MSN2614 2,0kW 12V

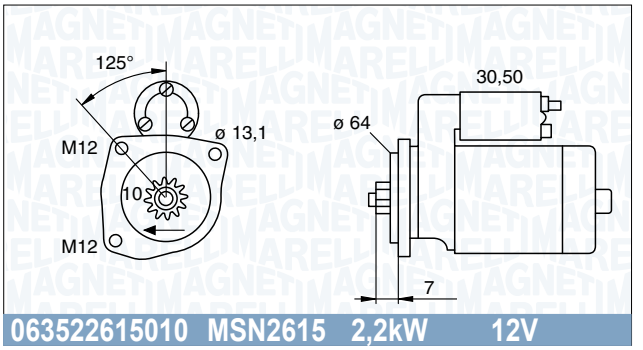

063522615010 MSN2615 2,2kW 12V

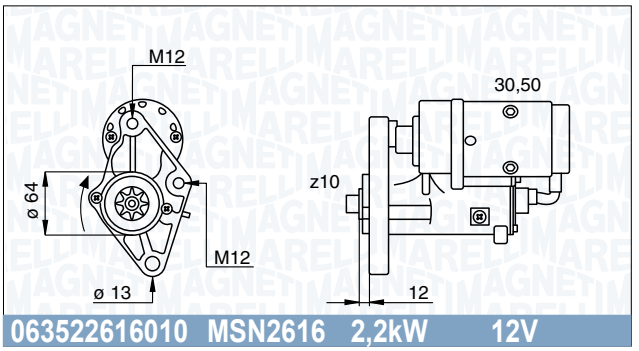

063522616010 MSN2616 2,2kW 12V

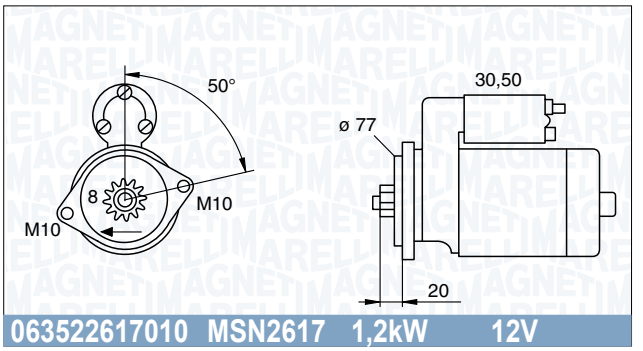

063522617010 MSN2617 1,2kW 12V

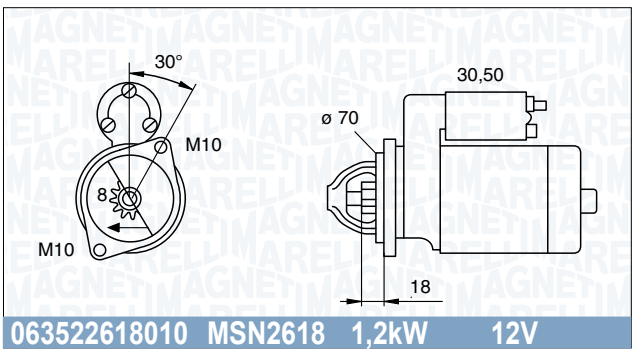

063522618010 MSN2618 1,2kW 12V

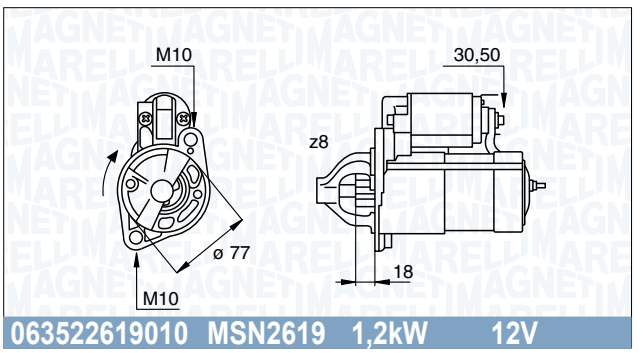

063522619010 MSN2619 1,2kW 12V

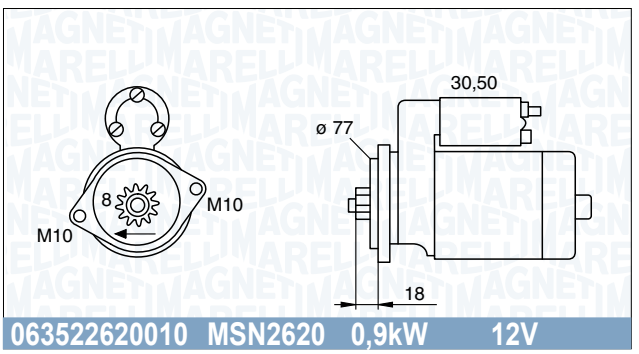

063522620010 MSN2620 0,9kW 12V

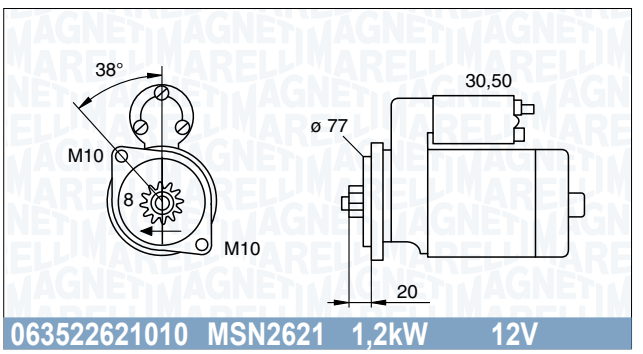

063522621010 MSN2621 1,2kW 12V

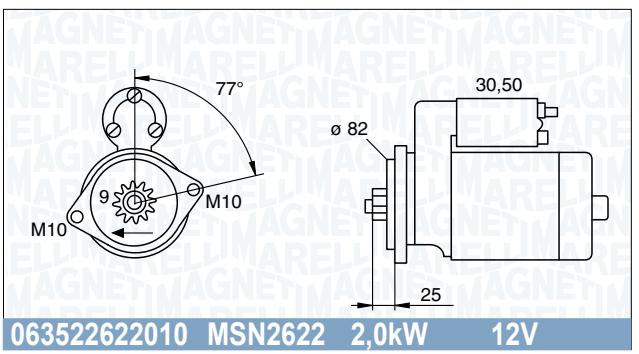

063522622010 MSN2622 2,0kW 12V

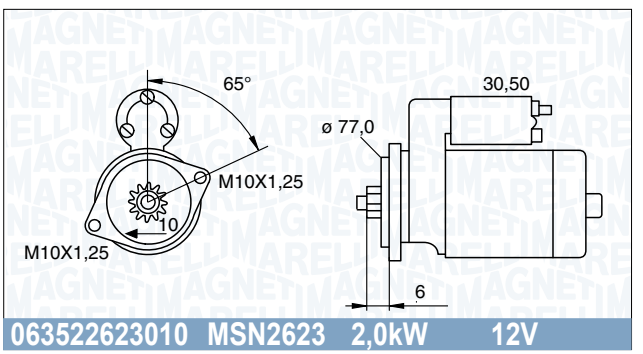

063522623010 MSN2623 2,0kW 12V

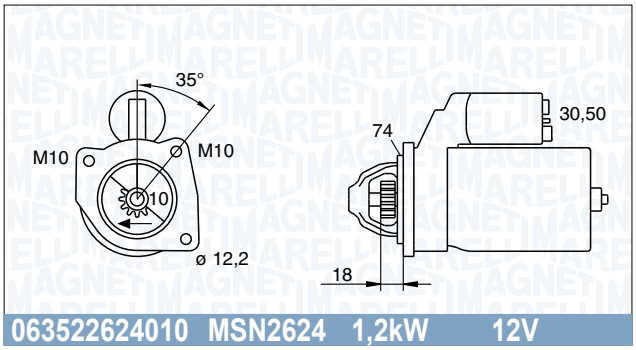

063522624010 MSN2624 1,2kW 12V

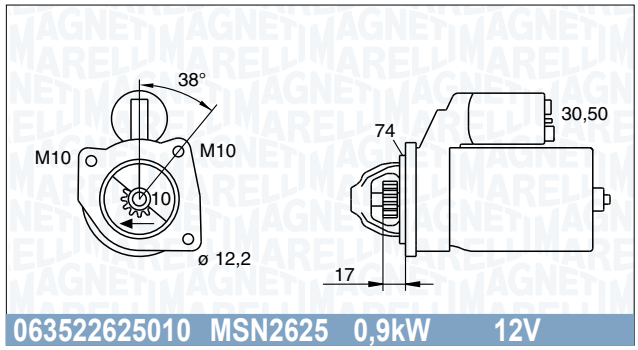

063522625010 MSN2625 0,9kW 12V

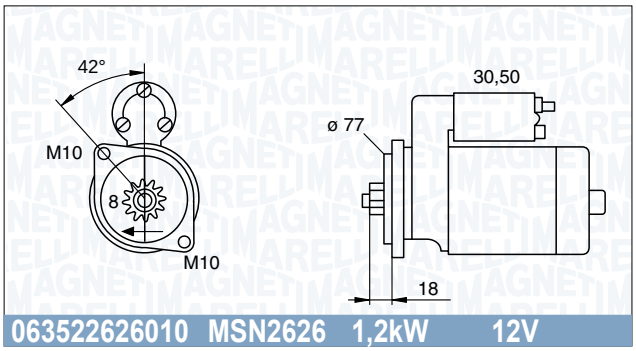

063522626010 MSN2626 1,2kW 12V

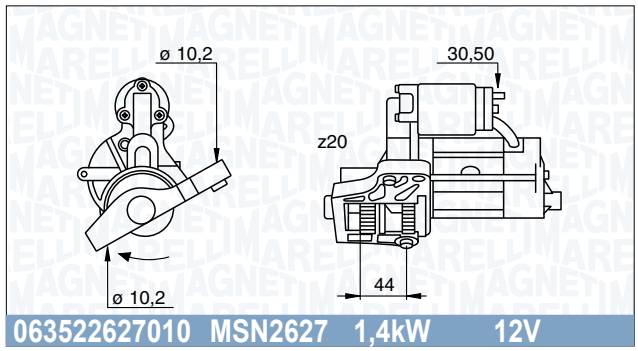

063522627010 MSN2627 1,4kW 12V

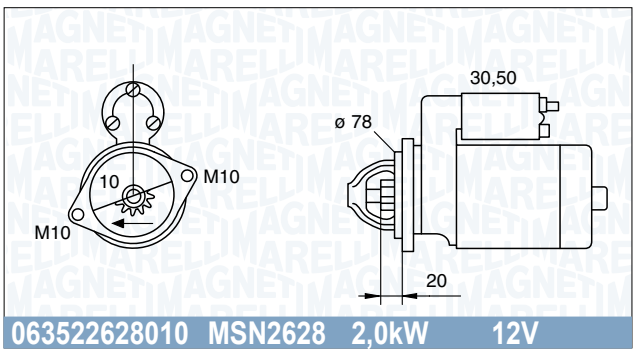

063522628010 MSN2628 2,0kW 12V

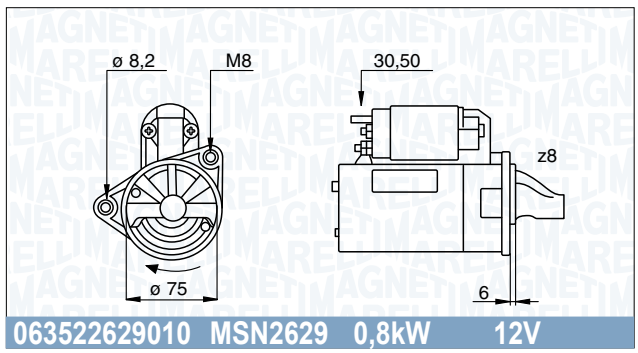

063522629010 MSN2629 0,8kW 12V

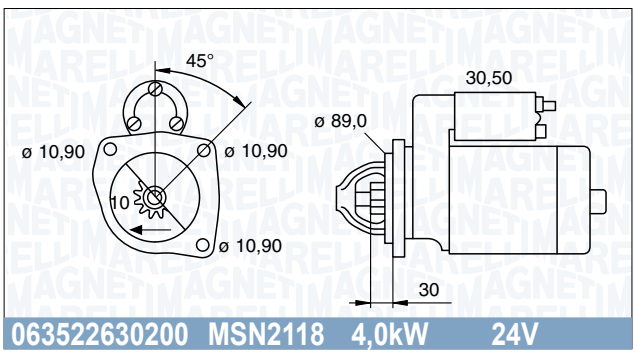

063522630200 MSN2118 4,0kW 24V

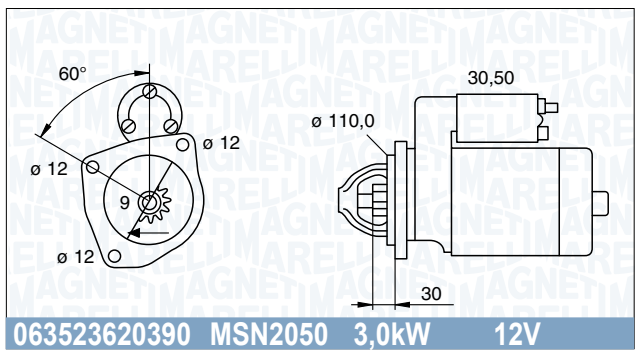

063523620390 MSN2050 3,0kW 12V

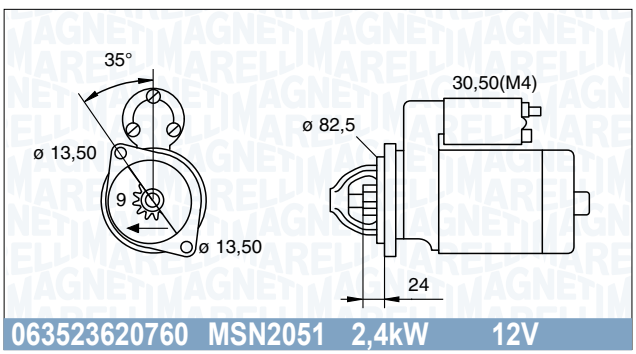

063523620760 MSN2051 2,4kW 12V

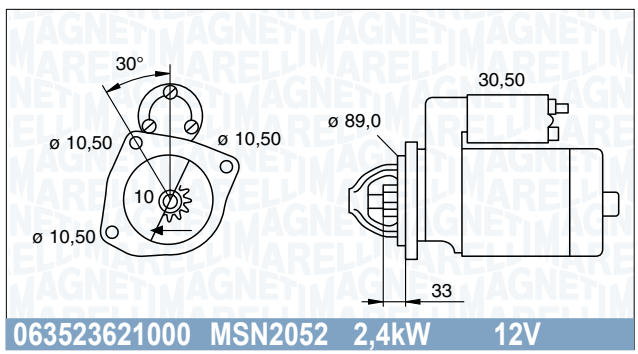

063523621000 MSN2052 2,4kW 12V

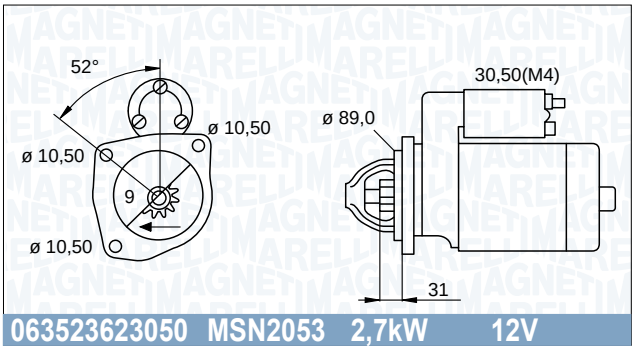

063523623050 MSN2053 2,7kW 12V

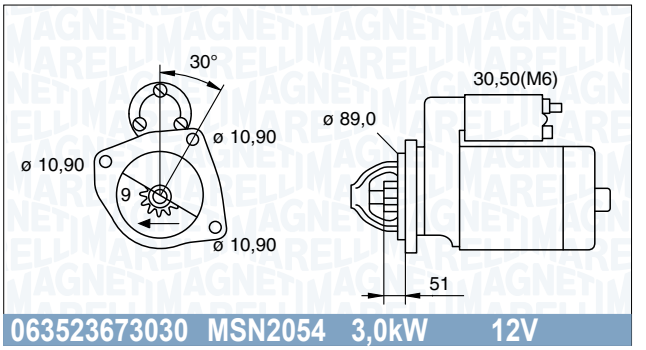

063523673030 MSN2054 3,0kW 12V

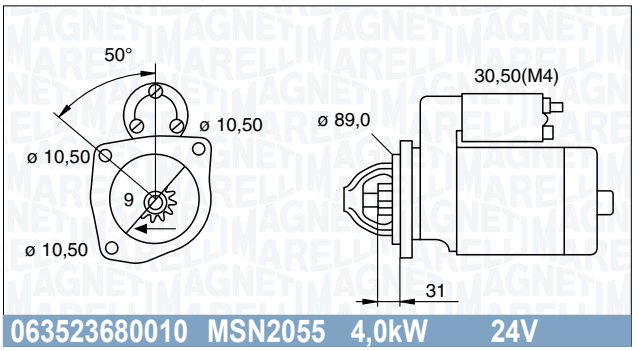

063523680010 MSN2055 4,0kW 24V

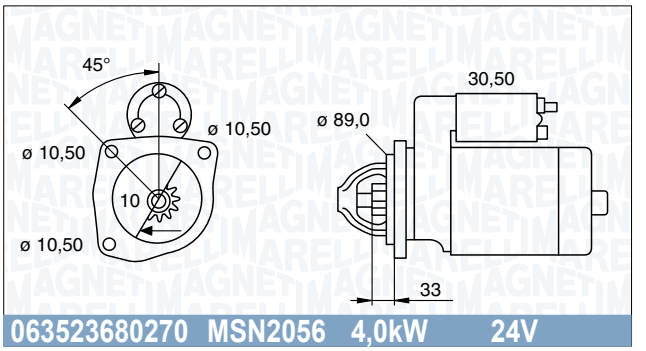

063523680270 MSN2056 4,0kW 24V

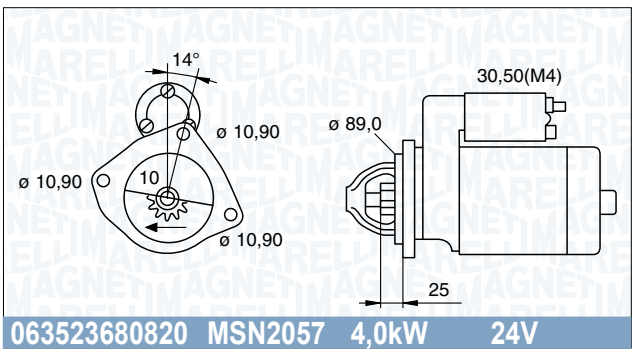

063523680820 MSN2057 4,0kW 24V

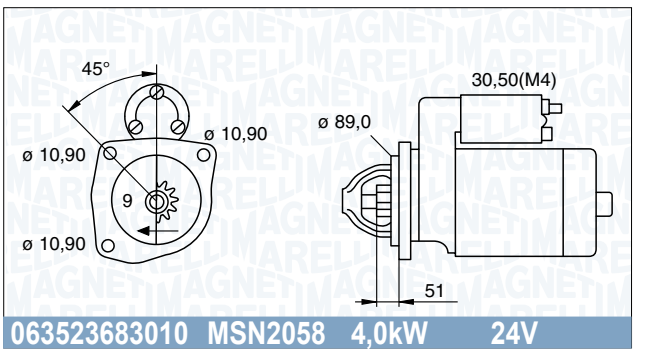

063523683010 MSN2058 4,0kW 24V

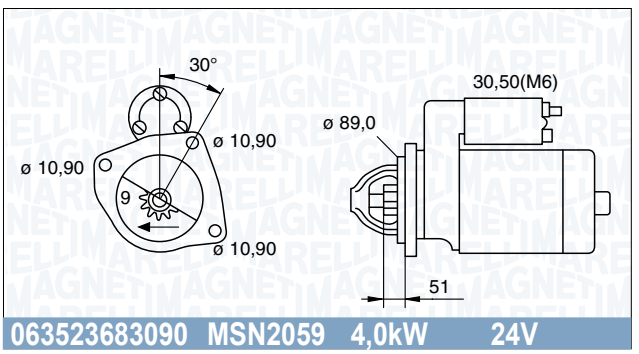

063523683090 MSN2059 4,0kW 24V

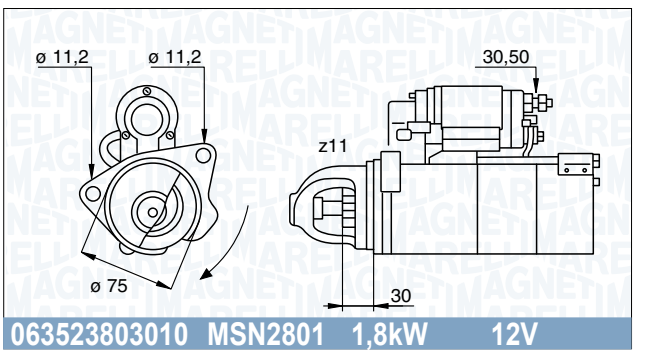

063523803010 MSN2801 1,8kW 12V

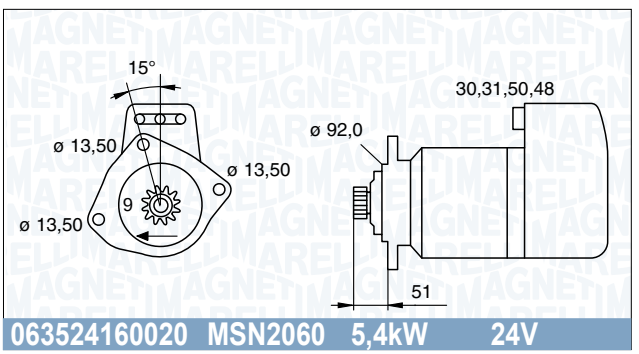

063524160020 MSN2060 5,4kW 24V

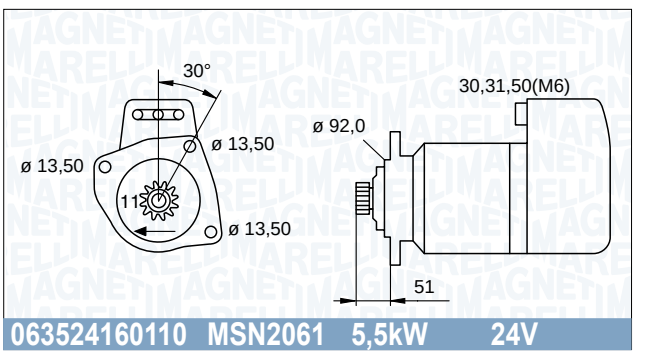

063524160110 MSN2061 5,5kW 24V

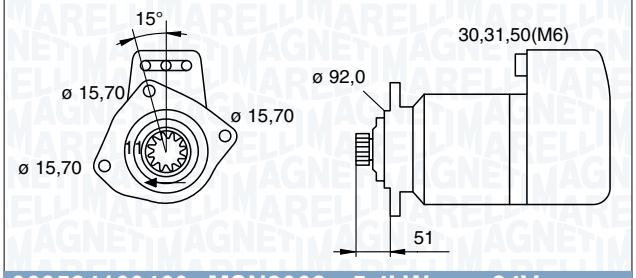

063524160460 MSN2062 5,4kW 24V

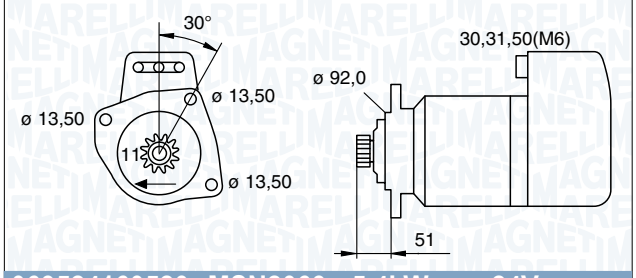

063524160520 MSN2063 5,4kW 24V

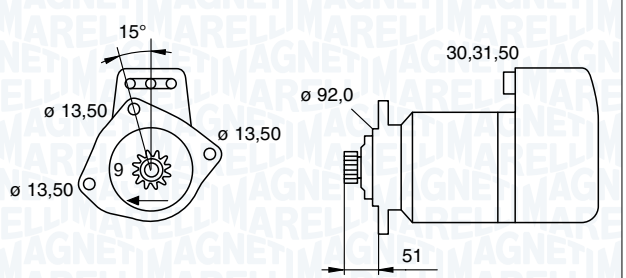

063524160780 MSN2064 5,4kW 24V

Tavole di comparazione
cross reference guide
Gegenüberstellung
Table de correspondance
abla de equivalencias
Tabela de equivalências
Tabela porównawcza
Кросс-таблица
çapraz referans tablosu

CROSS REFERENCE	MAGNETI MARELLI	
	LONG	SHORT
AGCO		
3763 363 M92	063227593010	**MSN540**
AGRIA		
1142 56668 5	063296843010	**MSN887**
AGRIFULL		
4755110	063216896010	**MSN224**
4807376	063216896010	**MSN224**
87569020	063216896010	**MSN224**
ASHIKA		
003-130007	063280010010	**MSN8010**
003-130200	063521120350	**MSN2004**
003-130200	063522604010	**MSN2604**
003-C104	063522620010	**MSN2620**
003-C121	063522620010	**MSN2620**
003-C125	063522621010	**MSN2621**
003-C126	063522617010	**MSN2617**
003-C130	063522620010	**MSN2620**
003-C952	063522623010	**MSN2623**
003-C963	063522611010	**MSN2611**
003-C967	063522609010	**MSN2609**
003-M949	063522628010	**MSN2628**
003-T230	063280051010	**MSN8051**
003-T344	063280052010	**MSN8052**
003-T356	063280055010	**MSN8055**
003-T363	063280049010	**MSN8049**
003-T364	063280049010	**MSN8049**
003-T909	063280049010	**MSN8049**
003-Z250	063522607010	**MSN2607**
BMW		
12411712937	063521074420	**MSN2019**
12411712939	063521074420	**MSN2019**
12412155827	063280071010	**MSN8071**
12412247063	063193001010	**MSN808**
12414496934	063193001010	**MSN808**
12417515391	063521074420	**MSN2019**
12417515396	063521074420	**MSN2019**
12417578684	063521074420	**MSN2019**
12417754662	063522300060	**MSN2038**
12417788680	063280071010	**MSN8071**
BOMAG		
05710901	063523623050	**MSN2053**
05710903	063523680010	**MSN2055**
BOMAG		
05710905	063523623050	**MSN2053**
05710923	063523623050	**MSN2053**
05710927	063523623050	**MSN2053**

CROSS REFERENCE	MAGNETI MARELLI	
	LONG	SHORT
BOMAG		
05710990	063522300060	**MSN2038**
05719897	063522300060	**MSN2038**
BOSCH		
9000083065	063523683090	**MSN2059**
9000083065	063522310030	**MSN2042**
9000141101	063222908010	**MSN290**
9000141107	063222908010	**MSN290**
9000143416	063227602010	**MSN199**
9000330929	063222908010	**MSN290**
9000330939	063222908010	**MSN290**
9000330948	063222908010	**MSN290**
9000362401	063217410010	**MSN242**
9004475321	063227501010	**MSN207**
0 001 106 014	063521060140	**MSN2067**
0 001 107 016	063227602010	**MSN199**
0 001 107 020	063521120380	**MSN2089**
0 001 107 024	063521070240	**MSN2010**
0 001 107 025	063521071030	**MSN2073**
0 001 107 033	063521070620	**MSN2014**
0 001 107 037	063521074030	**MSN2074**
0 001 107 040	063521070460	**MSN2011**
0 001 107 046	063521070460	**MSN2011**
0 001 107 047	063521070470	**MSN2012**
0 001 107 048	063521074030	**MSN2074**
0 001 107 054	063521070680	**MSN2070**
0 001 107 058	063521070580	**MSN2013**
0 001 107 062	063521070620	**MSN2014**
0 001 107 063	063521070630	**MSN2015**
0 001 107 066	063521070660	**MSN2069**
0 001 107 068	063521070680	**MSN2070**
0 001 107 072	063521074030	**MSN2074**
0 001 107 073	063521070730	**MSN2071**
0 001 107 078	063521070780	**MSN2016**
0 001 107 082	063280006010	**MSN8006**
0 001 107 083	063521074300	**MSN2018**
0 001 107 087	063280010010	**MSN8010**
0 001 107 091	063521070910	**MSN2017**
0 001 107 103	063521071030	**MSN2073**
BOSCH		
0 001 107 107	063521070460	**MSN2011**
0 001 107 110	063521070910	**MSN2017**
0 001 107 403	063521074030	**MSN2074**
0 001 107 408	063521074920	**MSN2117**
0 001 107 411	063521074110	**MSN2076**
0 001 107 427	063521074270	**MSN2077**

CROSS REFERENCE	MAGNETI MARELLI	
	LONG	SHORT
BOSCH		
0 001 107 430	063521074300	**MSN2018**
0 001 107 437	063521074370	**MSN2078**
0 001 107 437	063280045010	**MSN8045**
0 001 107 442	063521074420	**MSN2019**
0 001 107 492	063521074920	**MSN2117**
0 001 107 499	063280010010	**MSN8010**
0 001 108 050	063521070580	**MSN2013**
0 001 108 085	063521081760	**MSN2079**
0 001 108 111	063280014010	**MSN8014**
0 001 108 121	063280005010	**MSN8005**
0 001 108 129	063521070620	**MSN2014**
0 001 108 130	063521081760	**MSN2079**
0 001 108 137	063226801010	**MSN139**
0 001 108 139	063280014010	**MSN8014**
0 001 108 140	063280014010	**MSN8014**
0 001 108 176	063521081760	**MSN2079**
0 001 108 180	063521081800	**MSN2020**
0 001 108 183	063521084000	**MSN2083**
0 001 108 202	063521082390	**MSN2119**
0 001 108 204	063521082040	**MSN2001**
0 001 108 217	063521082170	**MSN2081**
0 001 108 234	063521082390	**MSN2119**
0 001 108 239	063521082390	**MSN2119**
0 001 108 400	063521084000	**MSN2083**
0 001 109 011	063521090110	**MSN2021**
0 001 109 012	063521090120	**MSN2022**
0 001 109 018	063521090180	**MSN2084**
0 001 109 030	063113002010	**MSN816**
0 001 109 035	063521090350	**MSN2023**
0 001 109 040	063226801010	**MSN139**
0 001 109 047	063521090470	**MSN2024**
0 001 109 055	063521090680	**MSN2002**
0 001 109 068	063521090680	**MSN2002**
0 001 109 250	063521092500	**MSN2025**
0 001 109 268	063521092680	**MSN2085**
0 001 109 300	063521093000	**MSN2026**
0 001 109 301	063521093000	**MSN2026**
0 001 109 306	063521093070	**MSN2009**
0 001 109 307	063521093070	**MSN2009**
0 001 109 313	063522230130	**MSN2006**
0 001 109 336	063521092680	**MSN2085**
0 001 109 357	063521093570	**MSN2120**
0 001 109 359	063523620760	**MSN2051**
0 001 110 013	063521101040	**MSN2086**
0 001 110 019	063521101040	**MSN2086**

CROSS REFERENCE	MAGNETI MARELLI	
	LONG	SHORT
BOSCH		
0 001 110 025	063521100250	MSN2027
0 001 110 031	063521250420	MSN2112
0 001 110 043	063521101040	MSN2086
0 001 110 064	063521101040	MSN2086
0 001 110 076	063521250350	MSN2111
0 001 110 084	063521250420	MSN2112
0 001 110 088	063521101040	MSN2086
0 001 110 092	063521090180	MSN2084
0 001 110 098	063521250350	MSN2111
0 001 110 102	063521090180	MSN2084
0 001 110 104	063521101040	MSN2086
0 001 110 105	063521101040	MSN2086
0 001 110 106	063521101060	MSN2028
0 001 110 124	063112003010	MSN209
0 001 110 124	063521090180	MSN2084
0 001 110 125	063521101250	MSN2003
0 001 110 126	063521101380	MSN2088
0 001 110 138	063521101380	MSN2088
0 001 112 005	063521070680	MSN2070
0 001 112 013	063521070680	MSN2070
0 001 112 021	063521130070	MSN2092
0 001 112 033	063280014010	MSN8014
0 001 112 035	063521120350	MSN2004
0 001 112 038	063521120380	MSN2089
0 001 112 041	063521120410	MSN2029
0 001 112 044	063521120440	MSN2090
0 001 113 006	063101015010	MSN829
0 001 113 006	063521130060	MSN2091
0 001 113 007	063521130070	MSN2092
0 001 113 009	063280014010	MSN8014
0 001 113 010	063280010010	MSN8010
0 001 113 011	063521120380	MSN2089
0 001 114 003	063521070680	MSN2070
0 001 114 015	063521070680	MSN2070
0 001 115 008	063521082170	MSN2081
0 001 115 025	063521082390	MSN2119
0 001 115 035	063521150350	MSN2030
0 001 116 005	063101015010	MSN829
0 001 116 005	063521130060	MSN2091
0 001 120 400	063521204000	MSN2093
0 001 120 406	063521204060	MSN2094
0 001 120 408	063521204080	MSN2095
0 001 120 410	063521204100	MSN2096
0 001 121 006	063521210280	MSN2099
0 001 121 008	063521210260	MSN2098

CROSS REFERENCE	MAGNETI MARELLI	
	LONG	SHORT
BOSCH		
0 001 121 016	063521210160	MSN2097
0 001 121 026	063521210260	MSN2098
0 001 121 028	063521210280	MSN2099
0 001 121 402	063521214020	MSN2101
0 001 121 408	063521214080	MSN2102
0 001 121 412	063521214120	MSN2103
0 001 123 012	063521230120	MSN2104
0 001 123 014	063521230140	MSN2105
0 001 123 016	063521230160	MSN2106
0 001 123 018	063521230180	MSN2107
0 001 124 001	063521250420	MSN2112
0 001 124 003	063521250350	MSN2111
0 001 124 011	063521240220	MSN2109
0 001 124 018	063521240260	MSN2110
0 001 124 020	063521240200	MSN2108
0 001 124 022	063521240220	MSN2109
0 001 124 026	063521240260	MSN2110
0 001 125 005	063521250350	MSN2111
0 001 125 007	063521250420	MSN2112
0 001 125 012	063521250420	MSN2112
0 001 125 018	063521250480	MSN2113
0 001 125 035	063521250350	MSN2111
0 001 125 042	063521250420	MSN2112
0 001 125 048	063521250480	MSN2113
0 001 133 003	063521120380	MSN2089
0 001 141 101	063222908010	MSN290
0 001 141 107	063222908010	MSN290
0 001 157 021	063222908010	MSN290
0 001 211 536	063101023010	MSN410
0 001 214 002	063521070240	MSN2010
0 001 218 159	063522230130	MSN2006
0 001 218 174	063521093070	MSN2009
0 001 218 728	063521101040	MSN2086
0 001 218 759	063522230130	MSN2006
0 001 218 774	063522187740	MSN2005
0 001 218 776	063521093570	MSN2120
0 001 218 808	063521093570	MSN2120
0 001 218 812	063522188120	MSN2033
0 001 218 819	063521093570	MSN2120
0 001 219 014	063522190140	MSN2034
0 001 223 003	063521093070	MSN2009
0 001 223 013	063522230130	MSN2006
0 001 223 016	063522230160	MSN2035
0 001 223 024	063521093070	MSN2009
0 001 223 503	063522235040	MSN2036

CROSS REFERENCE	MAGNETI MARELLI	
	LONG	SHORT
BOSCH		
0 001 223 504	063522235040	MSN2036
0 001 230 006	063522300060	MSN2038
0 001 230 007	063522300070	MSN2039
0 001 230 009	063522300090	MSN2040
0 001 230 010	063522300070	MSN2039
0 001 230 010	063216831010	MSN219
0 001 230 014	063522300060	MSN2038
0 001 230 023	063522300230	MSN2041
0 001 231 003	063522310030	MSN2042
0 001 231 005	063522310050	MSN2043
0 001 231 008	063522310290	MSN2048
0 001 231 010	063522310100	MSN2044
0 001 231 011	063522310110	MSN2045
0 001 231 016	063522310160	MSN2008
0 001 231 018	063522310180	MSN2046
0 001 231 026	063522630200	MSN2118
0 001 231 027	063522630200	MSN2118
0 001 231 028	063522310050	MSN2043
0 001 231 029	063522310290	MSN2048
0 001 231 033	063522310330	MSN2049
0 001 263 008	063522310050	MSN2043
0 001 263 019	063522630200	MSN2118
0 001 263 020	063522630200	MSN2118
0 001 314 003	063521090470	MSN2024
0 001 314 011	063207138010	MSN245
0 001 317 023	063521101040	MSN2086
0 001 354 010	063207138010	MSN245
0 001 354 090	063207138010	MSN245
0 001 354 091	063296843010	MSN887
0 001 354 200	063521090470	MSN2024
0 001 358 020	063216884010	MSN878
0 001 358 051	063216884010	MSN878
0 001 358 200	063227501010	MSN207
0 001 358 201	063227501010	MSN207
0 001 358 202	063227501010	MSN207
0 001 359 004	063216884010	MSN878
0 001 359 021	063217126010	MSN227
0 001 359 021	063216831010	MSN219
0 001 359 075	063296842010	MSN886
0 001 359 102	063216831010	MSN219
0 001 359 108	063216884010	MSN878
0 001 359 122	063216896010	MSN224
0 001 360 007	063216733010	MSN214
0 001 360 015	063216731010	MSN213
0 001 360 027	063216733010	MSN214

CROSS REFERENCE	MAGNETI MARELLI	
	LONG	SHORT
BOSCH		
0 001 360 043	063216731010	MSN213
0 001 360 063	063216741010	MSN521
0 001 362 017	063296843010	MSN887
0 001 362 018	063523620760	MSN2051
0 001 362 018	063296843010	MSN887
0 001 362 022	063207138010	MSN245
0 001 362 032	063523620390	MSN2050
0 001 362 032	063217126010	MSN227
0 001 362 034	063523623050	MSN2053
0 001 362 035	063523623050	MSN2053
0 001 362 039	063207159010	MSN877
0 001 362 039	063523620390	MSN2050
0 001 362 040	063523620760	MSN2051
0 001 362 040	063296843010	MSN887
0 001 362 049	063227470010	MSN184
0 001 362 049	063227488010	MSN175
0 001 362 062	063217148010	MSN229
0 001 362 062	063217410010	MSN242
0 001 362 064	063296842010	MSN886
0 001 362 073	063217154010	MSN230
0 001 362 076	063523620760	MSN2051
0 001 362 076	063296843010	MSN887
0 001 362 100	063523621000	MSN2052
0 001 362 101	063217410010	MSN242
0 001 362 102	063217148010	MSN229
0 001 362 102	063217410010	MSN242
0 001 362 105	063523620390	MSN2050
0 001 362 105	063207159010	MSN877
0 001 362 105	063522235040	MSN2036
0 001 362 105	063217126010	MSN227
0 001 362 301	063296842010	MSN886
0 001 362 305	063523623050	MSN2053
0 001 362 307	063227501010	MSN207
0 001 362 312	063206834010	MSN873
0 001 362 313	063523623050	MSN2053
0 001 362 316	063206834010	MSN873
0 001 363 101	063217226010	MSN237
0 001 363 111	063217226010	MSN237
0 001 366 004	063296843010	MSN887
0 001 366 015	063523620760	MSN2051
0 001 366 015	063296843010	MSN887
0 001 367 013	063216884010	MSN878
0 001 367 028	063522300070	MSN2039
0 001 367 028	063216831010	MSN219
0 001 367 029	063216896010	MSN224

CROSS REFERENCE	MAGNETI MARELLI	
	LONG	SHORT
BOSCH		
0 001 367 040	063227602010	MSN199
0 001 367 075	063206834010	MSN873
0 001 367 078	063206834010	MSN873
0 001 367 082	063216831010	MSN219
0 001 367 303	063523673030	MSN2054
0 001 368 001	063523680010	MSN2055
0 001 368 019	063522310100	MSN2044
0 001 368 019	063216731010	MSN213
0 001 368 020	063216741010	MSN521
0 001 368 020	063522310110	MSN2045
0 001 368 021	063216733010	MSN214
0 001 368 027	063523680270	MSN2056
0 001 368 082	063523680820	MSN2057
0 001 368 301	063523683010	MSN2058
0 001 368 309	063523683090	MSN2059
0 001 369 022	063206834010	MSN873
0 001 416 002	063524160020	MSN2060
0 001 416 011	063524160110	MSN2061
0 001 416 046	063524160460	MSN2062
0 001 416 052	063524160520	MSN2063
0 001 416 078	063524160780	MSN2064
0 986 010 450	063223085010	MSN520
0 986 010 450	063223101010	MSN274
0 986 010 950	063280020010	MSN8020
0 986 010 950	063227501010	MSN207
0 986 010 951	063227501010	MSN207
0 986 011 060	063217148010	MSN229
0 986 011 060	063217410010	MSN242
0 986 011 061	063217148010	MSN229
0 986 011 061	063217410010	MSN242
0 986 011 080	063216833010	MSN220
0 986 011 080	063217154010	MSN230
0 986 011 081	063217154010	MSN230
0 986 011 140	063523623050	MSN2053
0 986 011 160	063217226010	MSN237
0 986 011 160	063216731010	MSN213
0 986 011 161	063217226010	MSN237
0 986 011 220	063216831010	MSN219
0 986 011 221	063216831010	MSN219
0 986 011 270	063523680010	MSN2055
0 986 011 270	063523623050	MSN2053
0 986 011 280	063523683010	MSN2058
0 986 011 310	063522310100	MSN2044
0 986 011 310	063216731010	MSN213
0 986 011 311	063216731010	MSN213

CROSS REFERENCE	MAGNETI MARELLI	
	LONG	SHORT
BOSCH		
0 986 011 320	063216731010	MSN213
0 986 011 321	063216731010	MSN213
0 986 011 330	063216741010	MSN521
0 986 011 330	063216731010	MSN213
0 986 011 331	063216741010	MSN521
0 986 011 340	063216733010	MSN214
0 986 011 341	063216733010	MSN214
0 986 011 570	063524160020	MSN2060
0 986 011 570	063524160780	MSN2064
0 986 011 890	063222908010	MSN290
0 986 011 891	063222908010	MSN290
0 986 011 950	063216731010	MSN213
0 986 012 670	063207159010	MSN877
0 986 012 670	063217148010	MSN229
0 986 012 670	063217126010	MSN227
0 986 012 671	063207159010	MSN877
0 986 012 671	063217126010	MSN227
0 986 012 680	063296842010	MSN886
0 986 012 710	063216884010	MSN878
0 986 012 711	063216884010	MSN878
0 986 012 720	063216896010	MSN224
0 986 013 240	063280090010	MSN8090
0 986 013 270	063280014010	MSN8014
0 986 013 280	063280014010	MSN8014
0 986 013 420	063524160110	MSN2061
0 986 013 480	063523673030	MSN2054
0 986 013 490	063523683090	MSN2059
0 986 013 511	063522625010	MSN2625
0 986 013 620	063223085010	MSN520
0 986 013 620	063223101010	MSN274
0 986 013 850	063521120410	MSN2029
0 986 013 870	063216851010	MSN221
0 986 013 871	063216851010	MSN221
0 986 013 940	063101023010	MSN410
0 986 014 141	063522613010	MSN2613
0 986 014 700	063521100250	MSN2027
0 986 014 710	063222908010	MSN290
0 986 014 711	063222908010	MSN290
0 986 014 718	063222908010	MSN290
0 986 014 730	063206834010	MSN873
0 986 014 740	063206834010	MSN873
0 986 014 860	063521120350	MSN2004
0 986 014 991	063522625010	MSN2625
0 986 015 090	063280006010	MSN8006
0 986 015 090	063280008010	MSN8008

CROSS REFERENCE	MAGNETI MARELLI	
	LONG	SHORT
BOSCH		
0 986 015 150	063280014010	**MSN8014**
0 986 015 411	063207151010	**MSN875**
0 986 016 001	063522617010	**MSN2617**
0 986 016 011	063522624010	**MSN2624**
0 986 016 120	063521081760	**MSN2079**
0 986 016 240	063521101060	**MSN2028**
0 986 016 240	063521101380	**MSN2088**
0 986 016 290	063521120380	**MSN2089**
0 986 016 320	063521130070	**MSN2092**
0 986 016 330	063521070730	**MSN2071**
0 986 016 330	063521070680	**MSN2070**
0 986 016 350	063280014010	**MSN8014**
0 986 016 400	063521070470	**MSN2012**
0 986 016 470	063280005010	**MSN8005**
0 986 016 530	063521081760	**MSN2079**
0 986 016 530	063521070630	**MSN2015**
0 986 016 550	063522300060	**MSN2038**
0 986 016 790	063521120440	**MSN2090**
0 986 016 800	063521071030	**MSN2073**
0 986 016 870	063112003010	**MSN209**
0 986 016 870	063521090180	**MSN2084**
0 986 016 900	063521101250	**MSN2003**
0 986 016 980	063521250420	**MSN2112**
0 986 017 000	063521250350	**MSN2111**
0 986 017 030	063101015010	**MSN829**
0 986 017 030	063521130060	**MSN2091**
0 986 017 030	063101018010	**MSN400**
0 986 017 039	063101015010	**MSN829**
0 986 017 041	063222908010	**MSN290**
0 986 017 060	063280010010	**MSN8010**
0 986 017 070	063280010010	**MSN8010**
0 986 017 110	063521074420	**MSN2019**
0 986 017 120	063521120350	**MSN2004**
0 986 017 120	063522604010	**MSN2604**
0 986 017 240	063522310330	**MSN2049**
0 986 017 260	063521092500	**MSN2025**
0 986 017 310	063296843010	**MSN887**
0 986 017 420	063521090680	**MSN2002**
0 986 017 450	063521240220	**MSN2109**
0 986 017 490	063521093070	**MSN2009**
0 986 017 530	063280006010	**MSN8006**
0 986 017 770	063521070660	**MSN2069**
0 986 017 770	063111007010	**MSN807**
0 986 017 781	063102003010	**MSN603**
0 986 017 790	063521082390	**MSN2119**

CROSS REFERENCE	MAGNETI MARELLI	
	LONG	SHORT
BOSCH		
0 986 017 790	063113002010	**MSN816**
0 986 017 830	063521210280	**MSN2099**
0 986 017 880	063523680820	**MSN2057**
0 986 017 990	063522310030	**MSN2042**
0 986 018 040	063521210260	**MSN2098**
0 986 018 110	063521070240	**MSN2010**
0 986 018 151	063207145010	**MSN874**
0 986 018 151	063227592010	**MSN203**
0 986 018 151	063227486010	**MSN180**
0 986 018 161	063227593010	**MSN540**
0 986 018 220	063280008010	**MSN8008**
0 986 018 220	063521101040	**MSN2086**
0 986 018 230	063280014010	**MSN8014**
0 986 018 240	063280014010	**MSN8014**
0 986 018 310	063521084000	**MSN2083**
0 986 018 310	063280090010	**MSN8090**
0 986 018 390	063521250480	**MSN2113**
0 986 018 420	063524160520	**MSN2063**
0 986 018 430	063521210160	**MSN2097**
0 986 018 450	063521082040	**MSN2001**
0 986 018 450	063113003010	**MSN824**
0 986 018 721	063522625010	**MSN2625**
0 986 018 850	063521074030	**MSN2074**
0 986 018 880	063521070910	**MSN2017**
0 986 018 900	063521092680	**MSN2085**
0 986 018 930	063521240260	**MSN2110**
0 986 018 950	063521093070	**MSN2009**
0 986 018 960	063522230130	**MSN2006**
0 986 018 980	063522300230	**MSN2041**
0 986 018 980	063522300070	**MSN2039**
0 986 019 010	063522310110	**MSN2045**
0 986 019 040	063521070620	**MSN2014**
0 986 019 291	063103025010	**MSN927**
0 986 019 291	063101018010	**MSN400**
0 986 019 301	063102021010	**MSN402**
0 986 019 301	063101023010	**MSN410**
0 986 019 320	063217148010	**MSN229**
0 986 019 820	063522230160	**MSN2035**
0 986 019 840	063523803010	**MSN2801**
0 986 019 930	063521074110	**MSN2076**
0 986 019 940	063521060140	**MSN2067**
0 986 020 070	063522310290	**MSN2048**
0 986 020 170	063522310160	**MSN2008**
0 986 020 181	063280020010	**MSN8020**
0 986 020 220	063521204080	**MSN2095**

CROSS REFERENCE	MAGNETI MARELLI	
	LONG	SHORT
BOSCH		
0 986 020 230	063521214020	**MSN2101**
0 986 020 240	063521214080	**MSN2102**
0 986 020 250	063521230120	**MSN2104**
0 986 020 260	063521230140	**MSN2105**
0 986 020 280	063521230160	**MSN2106**
0 986 020 290	063521204060	**MSN2094**
0 986 020 300	063521230180	**MSN2107**
0 986 020 330	063521204100	**MSN2096**
0 986 020 370	063521240200	**MSN2108**
0 986 020 780	063521204000	**MSN2093**
0 986 020 870	063521074920	**MSN2117**
0 986 021 000	063522310050	**MSN2043**
0 986 021 020	063524160460	**MSN2062**
0 986 021 041	063114014010	**MSN801**
0 986 021 210	063521074270	**MSN2077**
0 986 021 217	063521074270	**MSN2077**
0 986 021 240	063521074370	**MSN2078**
0 986 021 240	063280045010	**MSN8045**
0 986 021 260	063521082170	**MSN2081**
0 986 021 351	063280022010	**MSN8022**
0 986 021 351	063187051010	**MSN870**
0 986 021 590	063102022010	**MSN418**
0 986 021 590	063102021010	**MSN402**
0 986 021 640	063521093000	**MSN2026**
0 986 021 690	063522310100	**MSN2044**
0 986 021230	063193001010	**MSN808**
0 986 022 101	063522607010	**MSN2607**
0 986 022 121	063280021010	**MSN8021**
0 986 022 131	063280029010	**MSN8029**
0 986 022 151	063191007010	**MSN800**
0 986 022 290	063521214120	**MSN2103**
0 986 022 411	063102021010	**MSN402**
0 986 022 440	063521090350	**MSN2023**
0 986 022 480	063521070780	**MSN2016**
0 986 022 490	063521074300	**MSN2018**
0 986 022 500	063521150350	**MSN2030**
0 986 022 550	063522235040	**MSN2036**
0 986 022 561	063280032010	**MSN8032**
0 986 022 581	063193001010	**MSN808**
0 986 022 631	063280006010	**MSN8006**
0 986 022 631	063280008010	**MSN8008**
0 986 022 750	063227569010	**MSN202**
0 986 022 850	063280023010	**MSN8023**
0 986 022 880	063280071010	**MSN8071**
0 986 023 190	063227599010	**MSN541**

CROSS REFERENCE	MAGNETI MARELLI	
	LONG	SHORT
BOSCH		
0 986 023 380	063280036010	**MSN8036**
0 986 023 440	063227488010	**MSN175**
0 986 023 570	063280027010	**MSN8027**
0 986 023 630	063280902010	**MSN883**
0 986 023 740	063103025010	**MSN927**
0 986 023 760	063280031010	**MSN8031**
0 986 023 880	063522629010	**MSN2629**
0 986 261 208	063111007010	**MSN807**
0 986 601 951	063227501010	**MSN207**
0 986 AN0 003	063522625010	**MSN2625**
0 986 JR1 091	063522625010	**MSN2625**
0 986 JR1 141	063522625010	**MSN2625**
0 986 JR1 154	063522613010	**MSN2613**
F000AL0128	063523673030	**MSN2054**
F000AL0319	063101018010	**MSN400**
F000AL0320	063520003200	**MSN2116**
F000AL0327	063521120410	**MSN2029**
F000AL0333	063521130070	**MSN2092**
CASE IH		
2852405	063522630200	**MSN2118**
2852478	063522630200	**MSN2118**
4755110	063216896010	**MSN224**
4784747	063524160520	**MSN2063**
4892338	063522310160	**MSN2008**
060532943	063524160020	**MSN2060**
500325137	063522310110	**MSN2045**
500325146	063522300090	**MSN2040**
234987A1	063227602010	**MSN199**
3218192EX	063296842010	**MSN886**
3218674R91	063296842010	**MSN886**
3228192R91	063296842010	**MSN886**
A186180	063296842010	**MSN886**
K308650	063227569010	**MSN202**
CHEVROLET		
96208783	063522601010	**MSN2601**
CUMMINS		
4 892 338	063522310160	**MSN2008**
CV PSH		
150552082	063280902010	**MSN883**
311501092	063522190140	**MSN2034**
420501092	063521093570	**MSN2120**
500027093	063216833010	**MSN220**
500548113	063111033010	**MSN405**
590015123	063227501010	**MSN207**
690501092	063521150350	**MSN2030**

CROSS REFERENCE	MAGNETI MARELLI	
	LONG	SHORT
CV PSH		
690521092	063521090470	**MSN2024**
DAEWOO		
90 094 133	063522602010	**MSN2602**
90 348 291	063522602010	**MSN2602**
96 208 781	063522602010	**MSN2602**
96 208 782	063522604010	**MSN2604**
96 208 782	063521120350	**MSN2004**
96 208 783	063522601010	**MSN2601**
96 208 785	063522612010	**MSN2612**
96 275 481	063522607010	**MSN2607**
96 289 430	063522629010	**MSN2629**
96 430 344	063522602010	**MSN2602**
96 430 344R	063522602010	**MSN2602**
96 450 663	063522612010	**MSN2612**
96 469 960	063522602010	**MSN2602**
96 497 700	063522607010	**MSN2607**
96 497 702	063522629010	**MSN2629**
96 550 792	063522604010	**MSN2604**
96 569 440	063522607010	**MSN2607**
96 618 789	063522607010	**MSN2607**
96 843 577	063522602010	**MSN2602**
96 952 005	063522602010	**MSN2602**
DAF		
1516657R	063521074030	**MSN2074**
1516667R	063523623050	**MSN2053**
1516685R	063522230130	**MSN2006**
1516687R	063522310030	**MSN2042**
1516687R	063523683090	**MSN2059**
1516696R	063522310110	**MSN2045**
1516698R	063523680820	**MSN2057**
1516704R	063523673030	**MSN2054**
1516707R	063524160020	**MSN2060**
1516707R	063524160780	**MSN2064**
1516715R	063217226010	**MSN237**
1516716R	063216731010	**MSN213**
1516722R	063217154010	**MSN230**
1516760R	063216741010	**MSN521**
1516763R	063524160520	**MSN2063**
1516763R	063524160110	**MSN2061**
1516768R	063523680010	**MSN2055**
1516776R	063521070630	**MSN2015**
1516788R	063521070470	**MSN2012**
1516792R	063217148010	**MSN229**
1516802R	063521081760	**MSN2079**
1524014R	063521093000	**MSN2026**

CROSS REFERENCE	MAGNETI MARELLI	
	LONG	SHORT
DELCO REMY		
500340	063227501010	**MSN207**
1113286	063522300060	**MSN2038**
8000032	063521093000	**MSN2026**
19024010	063524160780	**MSN2064**
19024010	063524160020	**MSN2060**
19024018	063524160110	**MSN2061**
19024018	063524160520	**MSN2063**
19024041	063524160460	**MSN2062**
19024046	063524160110	**MSN2061**
19024046	063524160520	**MSN2063**
19024158	063521074030	**MSN2074**
19024201	063216733010	**MSN214**
19024202	063216741010	**MSN521**
19024202	063216896010	**MSN224**
19024224	063522300060	**MSN2038**
19024229	063217154010	**MSN230**
19024229	063216833010	**MSN220**
19024230	063216831010	**MSN219**
19024230	063217126010	**MSN227**
19024231	063217226010	**MSN237**
19024231	063216731010	**MSN213**
19024232	063216741010	**MSN521**
19024232	063216731010	**MSN213**
19024233	063523683010	**MSN2058**
19024234	063523680010	**MSN2055**
19024235	063522300060	**MSN2038**
19024238	063216884010	**MSN878**
19024241	063217154010	**MSN230**
19024242	063217148010	**MSN229**
19024242	063217410010	**MSN242**
19024242	063217226010	**MSN237**
19024252	063523623050	**MSN2053**
19024252	063522300060	**MSN2038**
19024253	063216741010	**MSN521**
19024253	063216896010	**MSN224**
19024254	063217148010	**MSN229**
19024254	063217410010	**MSN242**
19024255	063217148010	**MSN229**
19024255	063217410010	**MSN242**
19024255	063217154010	**MSN230**
19024256	063522310100	**MSN2044**
19024256	063216741010	**MSN521**
19024256	063216731010	**MSN213**
19024257	063206834010	**MSN873**
19024258	063523683090	**MSN2059**

CROSS REFERENCE	MAGNETI MARELLI	
	LONG	SHORT
DELCO REMY		
19024259	063227501010	**MSN207**
19024268	063216733010	**MSN214**
19024268	063216741010	**MSN521**
19024271	063217154010	**MSN230**
19024272	063217126010	**MSN227**
19024272	063216831010	**MSN219**
19024273	063216741010	**MSN521**
19024273	063216731010	**MSN213**
19024274	063523683010	**MSN2058**
19024291	063523680270	**MSN2056**
19024817	063227602010	**MSN199**
19024820	063227602010	**MSN199**
19024841	063217154010	**MSN230**
913693N	063522607010	**MSN2607**
DRS 3557	063114014010	**MSN801**
DRS0007	063280902010	**MSN883**
DRS0015	063280027010	**MSN8027**
DRS0015N	063280027010	**MSN8027**
DRS0016	063280028010	**MSN8028**
DRS0016N	063280028010	**MSN8028**
DRS0017	063280031010	**MSN8031**
DRS0017N	063280031010	**MSN8031**
DRS0021	063521093000	**MSN2026**
DRS0024	063522235040	**MSN2036**
DRS0025	063216896010	**MSN224**
DRS0025	063522300090	**MSN2040**
DRS0030	063521074920	**MSN2117**
DRS0038	063280901010	**MSN882**
DRS0038	063522605010	**MSN2605**
DRS0063	063280045010	**MSN8045**
DRS0068	063102021010	**MSN402**
DRS0072	063280058010	**MSN8058**
DRS0073	063280052010	**MSN8052**
DRS0115	063280071010	**MSN8071**
DRS0116	063280053010	**MSN8053**
DRS0130	063522626010	**MSN2626**
DRS0130N	063522626010	**MSN2626**
DRS0147	063522616010	**MSN2616**
DRS0161	063280036010	**MSN8036**
DRS0161N	063280036010	**MSN8036**
DRS0185	063521093070	**MSN2009**
DRS0193	063103025010	**MSN927**
DRS0234	063521082390	**MSN2119**
DRS0288	063280059010	**MSN8059**
DRS0300	063280014010	**MSN8014**

CROSS REFERENCE	MAGNETI MARELLI	
	LONG	SHORT
DELCO REMY		
DRS0366	063522310180	**MSN2046**
DRS0369	063521070460	**MSN2011**
DRS0450	063223101010	**MSN274**
DRS0950	063280020010	**MSN8020**
DRS0950	063227501010	**MSN207**
DRS0950N	063227501010	**MSN207**
DRS0990	063522300060	**MSN2038**
DRS1060	063217410010	**MSN242**
DRS1060	063217148010	**MSN229**
DRS1063	063217148010	**MSN229**
DRS1063	063217410010	**MSN242**
DRS1080	063217154010	**MSN230**
DRS1140	063522300060	**MSN2038**
DRS1143	063522300060	**MSN2038**
DRS1160	063217148010	**MSN229**
DRS1160	063217226010	**MSN237**
DRS1200	063522300060	**MSN2038**
DRS1220	063217126010	**MSN227**
DRS1220	063216831010	**MSN219**
DRS1270	063523680010	**MSN2055**
DRS1310	063216741010	**MSN521**
DRS1310	063216731010	**MSN213**
DRS1321	063216731010	**MSN213**
DRS1330	063216741010	**MSN521**
DRS1330	063216731010	**MSN213**
DRS1340	063216733010	**MSN214**
DRS1340	063523680270	**MSN2056**
DRS1570	063524160020	**MSN2060**
DRS1891	063222908010	**MSN290**
DRS2172	063522620010	**MSN2620**
DRS2271	063522625010	**MSN2625**
DRS2301	063280901010	**MSN882**
DRS2301	063522620010	**MSN2620**
DRS2670	063217148010	**MSN229**
DRS2670	063217121010	**MSN226**
DRS2670	063217126010	**MSN227**
DRS2720	063216896010	**MSN224**
DRS3036	063522613010	**MSN2613**
DRS3036	063522623010	**MSN2623**
DRS3036N	063522613010	**MSN2613**
DRS3036N	063522623010	**MSN2623**
DRS3046	063522617010	**MSN2617**
DRS3104	063103022010	**MSN924**
DRS3104	063223101010	**MSN274**
DRS3105	063223101010	**MSN274**

CROSS REFERENCE	MAGNETI MARELLI	
	LONG	SHORT
DELCO REMY		
DRS3130	063280008010	**MSN8008**
DRS3139	063522617010	**MSN2617**
DRS3154	063522624010	**MSN2624**
DRS3156	063522624010	**MSN2624**
DRS3196	063280014010	**MSN8014**
DRS3198	063226801010	**MSN139**
DRS3198N	063226801010	**MSN139**
DRS3267	063280008010	**MSN8008**
DRS3274	063101018010	**MSN400**
DRS3274	063521130060	**MSN2091**
DRS3274	063101015010	**MSN829**
DRS3286	063227470010	**MSN184**
DRS3286	063227488010	**MSN175**
DRS3288	063111007010	**MSN807**
DRS3289	063227592010	**MSN203**
DRS3308	063102003010	**MSN603**
DRS3314	063113002010	**MSN816**
DRS3333	063227602010	**MSN199**
DRS3336	063227486010	**MSN180**
DRS3339	063522613010	**MSN2613**
DRS3343	063522603010	**MSN2603**
DRS3360	063280014010	**MSN8014**
DRS3378	063280051010	**MSN8051**
DRS3420	063524160110	**MSN2061**
DRS3501	063522625010	**MSN2625**
DRS3511	063522625010	**MSN2625**
DRS3535	063227501010	**MSN207**
DRS3535	063280020010	**MSN8020**
DRS3535N	063280020010	**MSN8020**
DRS3535N	063227501010	**MSN207**
DRS3549	063522604010	**MSN2604**
DRS3549N	063522604010	**MSN2604**
DRS3553	063522612010	**MSN2612**
DRS3553N	063522612010	**MSN2612**
DRS3554	063521120350	**MSN2004**
DRS3557	063114014010	**MSN801**
DRS3567	063280005010	**MSN8005**
DRS3567	063227602010	**MSN199**
DRS3577	063522621010	**MSN2621**
DRS3579	063522625010	**MSN2625**
DRS3620	063223101010	**MSN274**
DRS3676	063280008010	**MSN8008**
DRS3676N	063280008010	**MSN8008**
DRS3683	063521074110	**MSN2076**
DRS3683	063521070660	**MSN2069**

CROSS REFERENCE	MAGNETI MARELLI	
	LONG	SHORT
DELCO REMY		
DRS3690	063217154010	**MSN230**
DRS3693	063522607010	**MSN2607**
DRS3697	063223085010	**MSN520**
DRS3697	063223101010	**MSN274**
DRS3699	063280005010	**MSN8005**
DRS3703	063521070780	**MSN2016**
DRS3708	063522611010	**MSN2611**
DRS3755	063280010010	**MSN8010**
DRS3769	063227602010	**MSN199**
DRS3778	063280008010	**MSN8008**
DRS3797	063280022010	**MSN8022**
DRS3797N	063280022010	**MSN8022**
DRS3797N	063187051010	**MSN870**
DRS3803	063523803010	**MSN2801**
DRS3803N	063523803010	**MSN2801**
DRS3816	063103025010	**MSN927**
DRS3816	063101018010	**MSN400**
DRS3825	063280023010	**MSN8023**
DRS3825N	063280023010	**MSN8023**
DRS3828	063522310110	**MSN2045**
DRS3864	063280054010	**MSN8054**
DRS3865	063280054010	**MSN8054**
DRS3866	063280055010	**MSN8055**
DRS3867	063280055010	**MSN8055**
DRS3871	063216851010	**MSN221**
DRS3876	063521150350	**MSN2030**
DRS3878	063191007010	**MSN800**
DRS3887	063102022010	**MSN418**
DRS3887	063520003200	**MSN2116**
DRS3888	063522619010	**MSN2619**
DRS3889	063522618010	**MSN2618**
DRS3923	063522609010	**MSN2609**
DRS3923	063522622010	**MSN2622**
DRS3923N	063522609010	**MSN2609**
DRS3923N	063522622010	**MSN2622**
DRS3924	063522615010	**MSN2615**
DRS3924N	063522615010	**MSN2615**
DRS3929	063193001010	**MSN808**
DRS3935	063280048010	**MSN8048**
DRS3935	063280049010	**MSN8049**
DRS3938	063521090350	**MSN2023**
DRS3940	063101023010	**MSN410**
DRS3949	063280090010	**MSN8090**
DRS3956	063280034010	**MSN8034**
DRS3956N	063280034010	**MSN8034**

CROSS REFERENCE	MAGNETI MARELLI	
	LONG	SHORT
DELCO REMY		
DRS3957	063280021010	**MSN8021**
DRS3957N	063280021010	**MSN8021**
DRS3964	063521070580	**MSN2013**
DRS3967N	063521093000	**MSN2026**
DRS3968	063280029010	**MSN8029**
DRS3968N	063280029010	**MSN8029**
DRS3969	063280036010	**MSN8036**
DRS3969N	063280036010	**MSN8036**
DRS3975	063280032010	**MSN8032**
DRS3975N	063280032010	**MSN8032**
DRS3978	063101018010	**MSN400**
DRS3978	063103025010	**MSN927**
DRS4141	063522613010	**MSN2613**
DRS4711	063222908010	**MSN290**
DRS4740	063206834010	**MSN873**
DRS4860	063521120350	**MSN2004**
DRS4860N	063521120350	**MSN2004**
DRS4991	063522625010	**MSN2625**
DRS5010	063521081800	**MSN2020**
DRS5090	063280008010	**MSN8008**
DRS5150	063280014010	**MSN8014**
DRS5150N	063280014010	**MSN8014**
DRS6470	063280005010	**MSN8005**
DRS6470	063227602010	**MSN199**
DRS6470N	063280005010	**MSN8005**
DRS6470N	063227602010	**MSN199**
DRS6570	063521081800	**MSN2020**
DRS6870	063521090180	**MSN2084**
DRS6870	063112003010	**MSN209**
DRS6890	063522601010	**MSN2601**
DRS7041	063222908010	**MSN290**
DRS7041N	063222908010	**MSN290**
DRS7060	063280010010	**MSN8010**
DRS7060N	063280010010	**MSN8010**
DRS7070	063280010010	**MSN8010**
DRS7070N	063280010010	**MSN8010**
DRS7420	063521090680	**MSN2002**
DRS7420N	063521090680	**MSN2002**
DRS7490	063521093070	**MSN2009**
DRS7490N	063521093070	**MSN2009**
DRS7500	063280052010	**MSN8052**
DRS7530	063280006010	**MSN8006**
DRS7530N	063280006010	**MSN8006**
DRS7880	063523680820	**MSN2057**
DRS8230	063280014010	**MSN8014**

CROSS REFERENCE	MAGNETI MARELLI	
	LONG	SHORT
DELCO REMY		
DRS8420	063524160520	**MSN2063**
DRS8450	063521082040	**MSN2001**
DRS8450	063113003010	**MSN824**
DRS8880	063521070910	**MSN2017**
DRS8950	063521093070	**MSN2009**
DRS8960	063522230130	**MSN2006**
DRS8960N	063522230130	**MSN2006**
DRS8970	063280090010	**MSN8090**
DRS8980	063522300230	**MSN2041**
DRS8980	063522300070	**MSN2039**
DRS9020	063522300060	**MSN2038**
DRS9040	063521070620	**MSN2014**
DRT0070	063522310290	**MSN2048**
DRT0170	063522310160	**MSN2008**
DRT0631	063280050010	**MSN8050**
DRT0631	063280053010	**MSN8053**
DRT1000	063522310050	**MSN2043**
DRT1240	063521074370	**MSN2078**
DRT1240	063280045010	**MSN8045**
DRT1690	063522310100	**MSN2044**
DRT2411	063102021010	**MSN402**
DRT2411	063102022010	**MSN418**
DRT2490	063521074300	**MSN2018**
DENSO		
428000-0660	063280071010	**MSN8071**
428000-3180	063280059010	**MSN8059**
428000-7710	063280048010	**MSN8048**
428000-7740	063280049010	**MSN8049**
428000-7750	063280055010	**MSN8055**
428000-7770	063280050010	**MSN8050**
428000-7780	063280051010	**MSN8051**
428000-7790	063280053010	**MSN8053**
428000-7800	063280056010	**MSN8056**
428000-7820	063280058010	**MSN8058**
428000-7830	063280057010	**MSN8057**
428000-7840	063280054010	**MSN8054**
428000-7850	063280052010	**MSN8052**
DSN502	063114014010	**MSN801**
DSN504	063193001010	**MSN808**
DSN573	063102003010	**MSN603**
DSN575	063102021010	**MSN402**
DSN576	063102022010	**MSN418**
DSN577	063103022010	**MSN924**
DSN578	063103025010	**MSN927**
DSN579	063111007010	**MSN807**

CROSS REFERENCE	MAGNETI MARELLI	
	LONG	SHORT
DENSO		
DSN580	063111027010	**MSN806**
DSN581	063113003010	**MSN824**
DSN582	063114014010	**MSN801**
DSN583	063191007010	**MSN800**
DSN585	063222908010	**MSN290**
DSN586	063223085010	**MSN520**
DSN588	063113002010	**MSN816**
DSN920	063280048010	**MSN8048**
DSN921	063280049010	**MSN8049**
DSN922	063280050010	**MSN8050**
DSN923	063280051010	**MSN8051**
DSN928	063280052010	**MSN8052**
DSN929	063280053010	**MSN8053**
DSN931	063280054010	**MSN8054**
DSN934	063280055010	**MSN8055**
DSN935	063280056010	**MSN8056**
DSN936	063280057010	**MSN8057**
DSN937	063280058010	**MSN8058**
DEUTZ-FAHR		
01171750	063522310180	**MSN2046**
01179032	063522300060	**MSN2038**
01180928	063522300060	**MSN2038**
01180999	063522310050	**MSN2043**
01181751	063522230160	**MSN2035**
01181976	063522300060	**MSN2038**
01182126	063522310180	**MSN2046**
01182235	063522310050	**MSN2043**
01182382	063522230160	**MSN2035**
01182384	063522230160	**MSN2035**
01182390	063522310180	**MSN2046**
01182931	063522310050	**MSN2043**
01183122	063522310050	**MSN2043**
01183239	063522310050	**MSN2043**
01183365	063522230160	**MSN2035**
01183404	063522230160	**MSN2035**
01183681	063522310050	**MSN2043**
01303920	063296843010	**MSN887**
01303970	063296843010	**MSN887**
03045396	063522300060	**MSN2038**
03046531	063522300060	**MSN2038**
04300286	063522310180	**MSN2046**
4755108	063216731010	**MSN213**
12153840	063296843010	**MSN887**
12153841	063296843010	**MSN887**
605720100084	063207138010	**MSN245**

CROSS REFERENCE	MAGNETI MARELLI	
	LONG	SHORT
DRI		
315.120.112	063193001010	**MSN808**
318.005.092	063222908010	**MSN290**
318.010.092	063217154010	**MSN230**
318.024.092	063101023010	**MSN410**
318.027.092	063223101010	**MSN274**
318.028.094	063216741010	**MSN521**
318.032.102	063521101250	**MSN2003**
318.032.102	063521100250	**MSN2027**
318.038.092	063523620390	**MSN2050**
318.053.092	063102018010	**MSN923**
318.053.092	063521130060	**MSN2091**
318.056.092	063223085010	**MSN520**
318.056.092	063223101010	**MSN274**
318.057.092	063111007010	**MSN807**
318.059.092	063102003010	**MSN603**
318.062.092	063223085010	**MSN520**
318.062.092	063223101010	**MSN274**
318.065.102	063112003010	**MSN209**
318.065.102	063521090180	**MSN2084**
318.068.092	063114014010	**MSN801**
318.070.092	063521093070	**MSN2009**
318.072.082	063102018010	**MSN923**
318.072.082	063101015010	**MSN829**
318.073.092	063222908010	**MSN290**
318.077.092	063521092680	**MSN2085**
318.078.092	063521074110	**MSN2076**
318.078.092	063521070660	**MSN2069**
318.079.092	063522230130	**MSN2006**
318.083.092	063521070910	**MSN2017**
318.086.092	063113003010	**MSN824**
318.092.082	063102022010	**MSN418**
318.092.082	063520003200	**MSN2116**
318.093.104	063522310160	**MSN2008**
318.097.092	063521082390	**MSN2119**
318.098.094	063522310100	**MSN2044**
318.113.112	063223101010	**MSN274**
318.202.092	063280045010	**MSN8045**
318.204.082	063103025010	**MSN927**
318.205.092	063223085010	**MSN520**
318.205.092	063223101010	**MSN274**
319.020.102	063280014010	**MSN8014**
319.024.102	063280014010	**MSN8014**
319.041.102	063227602010	**MSN199**
319.045.102	063280010010	**MSN8010**
319.052.192	063280022010	**MSN8022**

CROSS REFERENCE	MAGNETI MARELLI	
	LONG	SHORT
DRI		
319.055.112	063280023010	**MSN8023**
319.057.112	063280036010	**MSN8036**
319.059.102	063280034010	**MSN8034**
319.060.112	063280029010	**MSN8029**
319.061.102	063227602010	**MSN199**
319.066.222	063280031010	**MSN8031**
319.070.112	063280036010	**MSN8036**
319.071.112	063280027010	**MSN8027**
319.075.112	063280028010	**MSN8028**
320.006.132	063280020010	**MSN8020**
320.012.132	063280020010	**MSN8020**
324.007.102	063522624010	**MSN2624**
324.008.082	063522625010	**MSN2625**
324.015.102	063522624010	**MSN2624**
324.044.082	063522625010	**MSN2625**
324.045.082	063522606010	**MSN2606**
324.049.082	063522625010	**MSN2625**
324.052.082	063522625010	**MSN2625**
324.060.082	063522626010	**MSN2626**
324.103.082	063522625010	**MSN2625**
326.004.102	063522613010	**MSN2613**
326.008.082	063522617010	**MSN2617**
326.020.132	063522613010	**MSN2613**
326.024.102	063522613010	**MSN2613**
326.039.082	063522618010	**MSN2618**
326.041.082	063522619010	**MSN2619**
326.045.092	063522609010	**MSN2609**
326.045.092	063522622010	**MSN2622**
326.055.102	063522613010	**MSN2613**
327.203.102	063522188120	**MSN2033**
328.033.102	063521120350	**MSN2004**
328.037.102	063521090680	**MSN2002**
328.050.092	063521074370	**MSN2078**
330.018.112	063521081800	**MSN2020**
330.026.092	063521093070	**MSN2009**
331.005.092	063522601010	**MSN2601**
335.216.112	063280059010	**MSN8059**
344.001.102	063227470010	**MSN184**
600.054.112	063521070460	**MSN2011**
600.085.092	063522300060	**MSN2038**
618.004.092	063523620390	**MSN2050**
618.024.104	063523680820	**MSN2057**
618.028.114	063524160520	**MSN2063**
618.029.094	063522310110	**MSN2045**
619.021.092	063522300230	**MSN2041**

CROSS REFERENCE	MAGNETI MARELLI	
	LONG	SHORT
DRI		
619.021.092	063522300070	**MSN2039**
624.010.102	063522615010	**MSN2615**
668.011.092	063521070780	**MSN2016**
684.002.092	063521090120	**MSN2022**
688.019.092	063522230160	**MSN2035**
ELSTOCK		
25-0040	063227470010	**MSN184**
25-0048	063222908010	**MSN290**
25-0226	063523620390	**MSN2050**
25-0274	063217154010	**MSN230**
25-0280	063280020010	**MSN8020**
25-0328	063522625010	**MSN2625**
25-0339	063523620390	**MSN2050**
25-0356	063521090120	**MSN2022**
25-0436	063522613010	**MSN2613**
25-0466	063522613010	**MSN2613**
25-0472	063216896010	**MSN224**
25-0493	063223101010	**MSN274**
25-1006	063101023010	**MSN410**
25-1053	063521101250	**MSN2003**
25-1053	063521100250	**MSN2027**
25-1114	063522625010	**MSN2625**
25-1158	063522624010	**MSN2624**
25-1160	063522624010	**MSN2624**
25-1238	063280014010	**MSN8014**
25-1265	063522617010	**MSN2617**
25-1334	063280014010	**MSN8014**
25-1343	063522613010	**MSN2613**
25-1480	063102018010	**MSN923**
25-1480	063521130060	**MSN2091**
25-2009	063522625010	**MSN2625**
25-2010	063227602010	**MSN199**
25-2048	063280010010	**MSN8010**
25-2051	063223085010	**MSN520**
25-2051	063223101010	**MSN274**
25-2052	063521081800	**MSN2020**
25-2057	063522625010	**MSN2625**
25-2075	063223085010	**MSN520**
25-2075	063223101010	**MSN274**
25-2081	063102003010	**MSN603**
25-2094	063521070780	**MSN2016**
25-2102	063522601010	**MSN2601**
25-2111	063521090680	**MSN2002**
25-2120	063111007010	**MSN807**
25-2128	063521120350	**MSN2004**

CROSS REFERENCE	MAGNETI MARELLI	
	LONG	SHORT
ELSTOCK		
25-2134	063522188120	**MSN2033**
25-2148	063521074110	**MSN2076**
25-2148	063521070660	**MSN2069**
25-2166	063521090180	**MSN2084**
25-2166	063112003010	**MSN209**
25-2185	063521093070	**MSN2009**
25-2187	063280020010	**MSN8020**
25-2210	063223085010	**MSN520**
25-2210	063223101010	**MSN274**
25-2211	063522613010	**MSN2613**
25-2232	063114014010	**MSN801**
25-2257	063222908010	**MSN290**
25-2411	063521093070	**MSN2009**
25-2419	063102018010	**MSN923**
25-2419	063101015010	**MSN829**
25-2463	063280022010	**MSN8022**
25-2466	063280023010	**MSN8023**
25-3002	063521092680	**MSN2085**
25-3059	063522300230	**MSN2041**
25-3059	063522300070	**MSN2039**
25-3068	063522609010	**MSN2609**
25-3068	063522622010	**MSN2622**
25-3088	063521070910	**MSN2017**
25-3096	063103025010	**MSN927**
25-3106	063522230130	**MSN2006**
25-3123	063522300060	**MSN2038**
25-3150	063522615010	**MSN2615**
25-3155	063280034010	**MSN8034**
25-3175	063113003010	**MSN824**
25-3200	063522619010	**MSN2619**
25-3204	063522618010	**MSN2618**
25-3212	063521082390	**MSN2119**
25-3283	063102021010	**MSN402**
25-3283	063102022010	**MSN418**
25-3310	063227602010	**MSN199**
25-3313	063521070460	**MSN2011**
25-3324	063522230160	**MSN2035**
25-3342	063521074370	**MSN2078**
25-3345	063280036010	**MSN8036**
25-3390	063280029010	**MSN8029**
25-3423	063280045010	**MSN8045**
25-3428	063280031010	**MSN8031**
25-3434	063280036010	**MSN8036**
25-3436	063280059010	**MSN8059**
25-3460	063280027010	**MSN8027**

CROSS REFERENCE	MAGNETI MARELLI	
	LONG	SHORT
ELSTOCK		
25-3477	063522626010	**MSN2626**
25-3495	063280028010	**MSN8028**
25-4000	063521070780	**MSN2016**
26-0393	063223101010	**MSN274**
26-0395	063522625010	**MSN2625**
26-3000	063193001010	**MSN808**
26-3341	063522606010	**MSN2606**
45-0228	063216741010	**MSN521**
45-0398	063522310100	**MSN2044**
45-2459	063524160520	**MSN2063**
45-3052	063523680820	**MSN2057**
45-3097	063522310110	**MSN2045**
45-3353	063522310160	**MSN2008**
FENDT		
F 139 900 060 011	063296843010	**MSN887**
F 716 900 060 060	063522300060	**MSN2038**
X 830 100 007	063523623050	**MSN2053**
FIAT GROUP		
4169093	063216831010	**MSN219**
4169095	063216731010	**MSN213**
4169096	063217126010	**MSN227**
4169096	063207159010	**MSN877**
4169096	063523620390	**MSN2050**
4172113	063216831010	**MSN219**
4172113	063207159010	**MSN877**
4229113	063222908010	**MSN290**
4229114	063222908010	**MSN290**
4231018	063216731010	**MSN213**
4269114	063216731010	**MSN213**
4401806	063222908010	**MSN290**
4412894	063217154010	**MSN230**
4448694	063217154010	**MSN230**
4468806	063222908010	**MSN290**
4470224	063217154010	**MSN230**
4470377	063223101010	**MSN274**
4470378	063223101010	**MSN274**
4623510	063101023010	**MSN410**
4682998	063217126010	**MSN227**
4682998	063207159010	**MSN877**
4682998	063523620390	**MSN2050**
4682999	063216731010	**MSN213**
4691200	063217226010	**MSN237**
4692477	063216731010	**MSN213**

CROSS REFERENCE	MAGNETI MARELLI	
	LONG	SHORT
FIAT GROUP		
4692478	063216831010	MSN219
4699405	063216831010	MSN219
4699704	063216731010	MSN213
4699705	063216831010	MSN219
4701920	063216731010	MSN213
4702248	063216831010	MSN219
4703751	063216831010	MSN219
4706008	063216741010	MSN521
4706720	063216733010	MSN214
4706931	063217226010	MSN237
4710224	063217148010	MSN229
4710224	063207159010	MSN877
4711699	063217148010	MSN229
4711699	063217410010	MSN242
4712894	063217154010	MSN230
4713805	063216833010	MSN220
4713806	063216896010	MSN224
4713807	063217154010	MSN230
4715701	063216831010	MSN219
4716026	063216741010	MSN521
4716062	063216741010	MSN521
4719664	063217410010	MSN242
4719664	063217148010	MSN229
4719666	063216896010	MSN224
4722682	063207159010	MSN877
4722682	063217126010	MSN227
4722682	063523620390	MSN2050
4728682	063217126010	MSN227
4728682	063523620390	MSN2050
4728682	063207159010	MSN877
4737754	063216731010	MSN213
4737755	063216831010	MSN219
4737756	063216741010	MSN521
4737758	063216833010	MSN220
4737759	063216896010	MSN224
4739353	063217126010	MSN227
4741669	063217154010	MSN230
4741669	063216833010	MSN220
4741699	063217154010	MSN230
4744841	063217226010	MSN237
4745929	063217126010	MSN227
4745930	063217410010	MSN242
4745930	063217148010	MSN229
4752403	063217226010	MSN237
4755108	063216731010	MSN213

CROSS REFERENCE	MAGNETI MARELLI	
	LONG	SHORT
FIAT GROUP		
4755109	063216831010	MSN219
4755110	063216896010	MSN224
4755111	063216741010	MSN521
4755113	063216733010	MSN214
4759929	063217126010	MSN227
4759929	063523620390	MSN2050
4759929	063207159010	MSN877
4763996	063216831010	MSN219
4784745	063524160110	MSN2061
4784747	063524160520	MSN2063
4786023	063524160460	MSN2062
4807373	063207159010	MSN877
4807373	063216831010	MSN219
4807374	063217148010	MSN229
4807374	063217410010	MSN242
4807375	063216831010	MSN219
4807376	063216896010	MSN224
4807376	063522300090	MSN2040
4807377	063217226010	MSN237
4807378	063522310100	MSN2044
4807378	063216731010	MSN213
4807379	063216731010	MSN213
4807379	063216741010	MSN521
4856056	063217148010	MSN229
4856056	063217410010	MSN242
5111319	063217121010	MSN226
5968605	063223101010	MSN274
5972684	063222908010	MSN290
5997309	063521100250	MSN2027
5999906	063101023010	MSN410
7564668	063217154010	MSN230
7566528	063223101010	MSN274
7580192	063521100250	MSN2027
7589547	063223101010	MSN274
7589655	063223101010	MSN274
7612952	063101023010	MSN410
7621040	063101023010	MSN410
7622104	063101023010	MSN410
7622952	063101023010	MSN410
7666528	063223101010	MSN274
7667227	063101023010	MSN410
7668988	063222908010	MSN290
7680615	063223101010	MSN274
7680615	063223085010	MSN520
7692102	063112003010	MSN209

CROSS REFERENCE	MAGNETI MARELLI	
	LONG	SHORT
FIAT GROUP		
7733966	063223101010	MSN274
7733966	063223085010	MSN520
7737262	063222908010	MSN290
7740560	063216731010	MSN213
7770210	063112003010	MSN209
7772456	063102018010	MSN923
7772459	063521130060	MSN2091
7772459	063101015010	MSN829
7772460	063101015010	MSN829
7772462	063223085010	MSN520
7772462	063223101010	MSN274
7773812	063223085010	MSN520
7773812	063223101010	MSN274
7785449	063101015010	MSN829
7785449	063102018010	MSN923
7796598	063521130060	MSN2091
7796598	063101015010	MSN829
8862534	063216733010	MSN214
8961386	063216733010	MSN214
8962534	063216733010	MSN214
8962687	063216833010	MSN220
9314191	063222908010	MSN290
9972215	063216831010	MSN219
33353237	063280045010	MSN8045
42498212	063216741010	MSN521
42498212	063216731010	MSN213
46231500	063222908010	MSN290
46231504	063222908010	MSN290
46231505	063222908010	MSN290
46231510	063101023010	MSN410
46231531	063101015010	MSN829
46231531	063102018010	MSN923
46231535	063223085010	MSN520
46231535	063223101010	MSN274
46231540	063223101010	MSN274
46231541	063102003010	MSN603
46231542	063103022010	MSN924
46231555	063223101010	MSN274
46231601	063521100250	MSN2027
46231640	063217154010	MSN230
46231646	063114014010	MSN801
46406474	063223101010	MSN274
46406970	063222908010	MSN290
46406973	063111007010	MSN807
46406974	063111007010	MSN807

CROSS REFERENCE	MAGNETI MARELLI	
	LONG	SHORT
FIAT GROUP		
46414994	063101015010	MSN829
46415504	063101015010	MSN829
46416879	063223101010	MSN274
46416897	063223101010	MSN274
46417006	063223101010	MSN274
46417006	063223085010	MSN520
46419332	063102003010	MSN603
46419392	063102003010	MSN603
46420106	063111007010	MSN807
46429594	063102018010	MSN923
46430721	063112003010	MSN209
46430721	063521090180	MSN2084
46430784	063113002010	MSN816
46430785	063521130060	MSN2091
46432262	063101023010	MSN410
46432301	063222908010	MSN290
46439669	063112003010	MSN209
46439700	063112003010	MSN209
46442044	063111007010	MSN807
46446291	063521101250	MSN2003
46454211	063111007010	MSN807
46465273	063222908010	MSN290
46465475	063101023010	MSN410
46468696	063111007010	MSN807
46468696	063521070660	MSN2069
46473784	063113002010	MSN816
46473785	063102018010	MSN923
46473785	063101015010	MSN829
46473787	063103022010	MSN924
46475793	063223101010	MSN274
46475793	063103022010	MSN924
46478224	063103022010	MSN924
46478945	063113002010	MSN816
46518059	063102018010	MSN923
46518059	063101015010	MSN829
46522234	063113003010	MSN824
46548653	063101015010	MSN829
46548654	063103025010	MSN927
46548654	063102018010	MSN923
46554211	063111007010	MSN807
46554407	063112003010	MSN209
46740241	063111033010	MSN405
46740242	063103025010	MSN927
46740242	063101018010	MSN400
46748349	063521070910	MSN2017

CROSS REFERENCE	MAGNETI MARELLI	
	LONG	SHORT
FIAT GROUP		
46758240	063522230130	MSN2006
46763529	063103025010	MSN927
46765839	063102021010	MSN402
46774415	063103022010	MSN924
46774417	063103025010	MSN927
46791692	063521074110	MSN2076
46797350	063222908010	MSN290
46813064	063102022010	MSN418
46821681	063521070910	MSN2017
46823543	063113002010	MSN816
46823544	063102021010	MSN402
46823548	063280045010	MSN8045
46830212	063521082040	MSN2001
46843092	063101023010	MSN410
50232991	063216851010	MSN221
51771795	063111007010	MSN807
51772325	063520003200	MSN2116
51772325	063102022010	MSN418
51782321	063113002010	MSN816
51782321	063521082390	MSN2119
51810266	063280045010	MSN8045
51810302	063280045010	MSN8045
51823860	063280045010	MSN8045
51832950	063102022010	MSN418
51832950	063280060010	MSN8060
51832953	063521092680	MSN2085
51832954	063521082390	MSN2119
51832959	063111007010	MSN807
51833880	063103025010	MSN927
51890631	063520003200	MSN2116
51890631	063280060010	MSN8060
51890632	063280061010	MSN8061
51890633	063280062010	MSN8062
55192483	063102022010	MSN418
55193355	063102021010	MSN402
55193356	063280060010	MSN8060
55193406	063521074110	MSN2076
55193407	063521070910	MSN2017
55193460	063521074110	MSN2076
55195029	063521092680	MSN2085
55195030	063103025010	MSN927
55195030	063101018010	MSN400
55195211	063113002010	MSN816
55196400	063102018010	MSN923
55196400	063101018010	MSN400

CROSS REFERENCE	MAGNETI MARELLI	
	LONG	SHORT
FIAT GROUP		
55201360	063102021010	MSN402
55204116	063280045010	MSN8045
55353247	063280045010	MSN8045
55353257	063521074370	MSN2078
55353257	063280045010	MSN8045
60620761	063111007010	MSN807
60657152	063111027010	MSN806
60664128	063111027010	MSN806
60813461	063521070660	MSN2069
60814911	063113002010	MSN816
63101015	063103025010	MSN927
64432301	063222908010	MSN290
71721230	063103022010	MSN924
71721242	063114014010	MSN801
71721258	063103022010	MSN924
71721270	063111027010	MSN806
71721271	063111027010	MSN806
71752055	063102018010	MSN923
71752055	063101018010	MSN400
71782283	063111027010	MSN806
71782324	063114014010	MSN801
75114529	063522310100	MSN2044
76210400	063101023010	MSN410
76221040	063101023010	MSN410
77028560	063217410010	MSN242
77028560	063217148010	MSN229
77040560	063216731010	MSN213
77040561	063216731010	MSN213
77050262	063216741010	MSN521
77050561	063217226010	MSN237
77065560	063216733010	MSN214
77080560	063216731010	MSN213
77080560	063217226010	MSN237
77080561	063217226010	MSN237
77097430	063216733010	MSN214
77130560	063216733010	MSN214
77167660	063521101250	MSN2003
77175430	063222908010	MSN290
77201430	063222908010	MSN290
77305430	063101023010	MSN410
77323430	063521100250	MSN2027
77398430	063223101010	MSN274
77414430	063216731010	MSN213
77414431	063216731010	MSN213
77444430	063216731010	MSN213

CROSS REFERENCE	MAGNETI MARELLI	
	LONG	SHORT
FIAT GROUP		
77445430	063216731010	MSN213
77515430	063217154010	MSN230
77603430	063223101010	MSN274
77682430	063217148010	MSN229
80296470	063522230130	MSN2006
88205001	063217126010	MSN227
88205001	063523620390	MSN2050
88205005	063217126010	MSN227
88205005	063207159010	MSN877
88205005	063523620390	MSN2050
88205006	063216831010	MSN219
88205018	063216833010	MSN220
88205019	063216896010	MSN224
88205020	063217121010	MSN226
500307724	063521093070	MSN2009
504385577	063522630200	MSN2118
1319555080	063114014010	MSN801
1329201080	063522230130	MSN2006
1331329080	063114014010	MSN801
1342792080	063521084000	MSN2083
1347058080	063521093000	MSN2026
1349920080	063522230130	MSN2006
9609313280	063521120410	MSN2029
9615519880	063521070630	MSN2015
9624291380	063521070630	MSN2015
9625383080	063521084000	MSN2083
9629473280	063521081760	MSN2079
FIATALLIS		
4713806	063216896010	MSN224
4737758	063216833010	MSN220
4737759	063216896010	MSN224
4741699	063216833010	MSN220
4755110	063216896010	MSN224
4807376	063216896010	MSN224
87569020	063216896010	MSN224
88205018	063216833010	MSN220
FORD		
1004565	063280010010	MSN8010
1004566	063280010010	MSN8010
1008813	063280008010	MSN8008
1008823	063280020010	MSN8020
1008825	063280020010	MSN8020
1008826	063280014010	MSN8014
1008827	063280014010	MSN8014
1008828	063280014010	MSN8014

CROSS REFERENCE	MAGNETI MARELLI	
	LONG	SHORT
FORD		
1008831	063280014010	MSN8014
1008835	063280008010	MSN8008
1011330	063280010010	MSN8010
1011331	063280010010	MSN8010
1018882	063280010010	MSN8010
1018883	063280010010	MSN8010
1019852	063280006010	MSN8006
1020508	063280006010	MSN8006
1024508	063280020010	MSN8020
1027300	063280008010	MSN8008
1027772	063280006010	MSN8006
1027928	063280020010	MSN8020
1030151	063280006010	MSN8006
1047081	063280006010	MSN8006
1057652	063280005010	MSN8005
1057811	063280006010	MSN8006
1058429	063280006010	MSN8006
1058429	063280008010	MSN8008
1059179	063280020010	MSN8020
1061267	063280008010	MSN8008
1061269	063280010010	MSN8010
1061271	063280010010	MSN8010
1061458	063280005010	MSN8005
1063999	063280010010	MSN8010
1064000	063280010010	MSN8010
1067536	063280006010	MSN8006
1067621	063280006010	MSN8006
1067622	063280006010	MSN8006
1073094	063280010010	MSN8010
1076141	063280032010	MSN8032
1088649	063280010010	MSN8010
1088650	063280010010	MSN8010
1092115	063280010010	MSN8010
1092116	063280010010	MSN8010
1092117	063280006010	MSN8006
1093471	063280020010	MSN8020
1095570	063280005010	MSN8005
1096338	063280022010	MSN8022
1097126	063280005010	MSN8005
1104965	063280005010	MSN8005
1105310	063280020010	MSN8020
1107016	063280005010	MSN8005
1116389	063280010010	MSN8010
1118336	063280008010	MSN8008
1120214	063280023010	MSN8023

CROSS REFERENCE	MAGNETI MARELLI	
	LONG	SHORT
FORD		
1120215	063280022010	MSN8022
1126987	063280006010	MSN8006
1130187	063280010010	MSN8010
1133994	063280008010	MSN8008
1140110	063280022010	MSN8022
1140111	063280023010	MSN8023
1140757	063280021010	MSN8021
1144505	063280021010	MSN8021
1147309	063280010010	MSN8010
1151215	063280010010	MSN8010
1151216	063280005010	MSN8005
1151641	063280022010	MSN8022
1151642	063280032010	MSN8032
1197912	063280031010	MSN8031
1205240	063280032010	MSN8032
1209193	063280031010	MSN8031
1214371	063280022010	MSN8022
1218885	063280023010	MSN8023
1229425	063280008010	MSN8008
1229427	063280029010	MSN8029
1231963	063280036010	MSN8036
1233234	063280029010	MSN8029
1233235	063280036010	MSN8036
1233277	063280031010	MSN8031
1237323	063280010010	MSN8010
1250901	063280005010	MSN8005
1251700	063280027010	MSN8027
1254222	063280029010	MSN8029
1300504	063280027010	MSN8027
1325943	063280028010	MSN8028
1345314	063280034010	MSN8034
1350459	063280021010	MSN8021
1351989	063280036010	MSN8036
1365665	063280010010	MSN8010
1365666	063227602010	MSN199
1366473	063280028010	MSN8028
1366986	063280027010	MSN8027
1368970	063280029010	MSN8029
1368974	063280021010	MSN8021
1369310	063280023010	MSN8023
1373810	063280005010	MSN8005
1376305	063280036010	MSN8036
1385784	063280036010	MSN8036
1386127	063280031010	MSN8031
1387062	063280022010	MSN8022

CROSS REFERENCE	MAGNETI MARELLI	
	LONG	SHORT
FORD		
1388569	063280032010	**MSN8032**
1416198	063280020010	**MSN8020**
1416231	063280010010	**MSN8010**
1416236	063280006010	**MSN8006**
1449615	063280022010	**MSN8022**
1450653	063280022010	**MSN8022**
1465010	063280023010	**MSN8023**
1465115	063280036010	**MSN8036**
1469712	063280029010	**MSN8029**
1469721	063280036010	**MSN8036**
1477482	063280027010	**MSN8027**
1477973	063280034010	**MSN8034**
1478129	063280028010	**MSN8028**
1483817	063280021010	**MSN8021**
1541002	063280022010	**MSN8022**
1551240	063280022010	**MSN8022**
1552432	063280022010	**MSN8022**
1564723	063227501010	**MSN207**
1596530	063280020010	**MSN8020**
1626195	063227501010	**MSN207**
1626195	063280020010	**MSN8020**
1638241	063280014010	**MSN8014**
1638242	063280014010	**MSN8014**
1644028	063280008010	**MSN8008**
1644666	063280014010	**MSN8014**
1644667	063280014010	**MSN8014**
1652470	063280008010	**MSN8008**
1653206	063227501010	**MSN207**
1653209	063280020010	**MSN8020**
1653210	063280020010	**MSN8020**
1653210	063227501010	**MSN207**
1654769	063280014010	**MSN8014**
4069775	063280022010	**MSN8022**
4078768	063280022010	**MSN8022**
4078768	063187051010	**MSN870**
4443760	063280034010	**MSN8034**
4509615	063280022010	**MSN8022**
4520765	063280022010	**MSN8022**
4529404	063187051010	**MSN870**
4529404	063280022010	**MSN8022**
4742541	063280022010	**MSN8022**
5003643	063227501010	**MSN207**
5016230	063280014010	**MSN8014**
5016231	063280014010	**MSN8014**
5016232	063280014010	**MSN8014**

CROSS REFERENCE	MAGNETI MARELLI	
	LONG	SHORT
FORD		
5016233	063280014010	**MSN8014**
5016234	063280014010	**MSN8014**
5016235	063280008010	**MSN8008**
5018940	063280014010	**MSN8014**
5018942	063280014010	**MSN8014**
5018943	063280014010	**MSN8014**
5018944	063280014010	**MSN8014**
5021193	063280014010	**MSN8014**
5021195	063280014010	**MSN8014**
5022414	063280014010	**MSN8014**
5022454	063280014010	**MSN8014**
5022455	063280014010	**MSN8014**
5023431	063280008010	**MSN8008**
5023549	063280008010	**MSN8008**
5023550	063280014010	**MSN8014**
5023551	063280014010	**MSN8014**
5023587	063280008010	**MSN8008**
5023593	063280008010	**MSN8008**
5023595	063280014010	**MSN8014**
5023717	063280014010	**MSN8014**
5026136	063280008010	**MSN8008**
5026494	063280014010	**MSN8014**
5026495	063280014010	**MSN8014**
5026496	063280014010	**MSN8014**
5026497	063280020010	**MSN8020**
5026806	063280005010	**MSN8005**
5027113	063280014010	**MSN8014**
5027117	063280014010	**MSN8014**
5027121	063280008010	**MSN8008**
5027131	063280014010	**MSN8014**
5027176	063280014010	**MSN8014**
5027803	063280014010	**MSN8014**
5027804	063280014010	**MSN8014**
5027805	063280014010	**MSN8014**
5027807	063280014010	**MSN8014**
5028540	063280008010	**MSN8008**
5029141	063280008010	**MSN8008**
6039198	063227501010	**MSN207**
6039198	063280020010	**MSN8020**
6071805	063280020010	**MSN8020**
6129114	063280008010	**MSN8008**
6130216	063280008010	**MSN8008**
6144117	063280020010	**MSN8020**
6147936	063280008010	**MSN8008**
6149609	063280014010	**MSN8014**

CROSS REFERENCE	MAGNETI MARELLI	
	LONG	SHORT
FORD		
6154907	063280020010	**MSN8020**
6157854	063280014010	**MSN8014**
6157855	063280014010	**MSN8014**
6157856	063280014010	**MSN8014**
6157857	063280014010	**MSN8014**
6157858	063280014010	**MSN8014**
6157859	063280014010	**MSN8014**
6157860	063280014010	**MSN8014**
6157861	063280014010	**MSN8014**
6157862	063280014010	**MSN8014**
6157863	063280014010	**MSN8014**
6157872	063280014010	**MSN8014**
6157874	063280014010	**MSN8014**
6157876	063280014010	**MSN8014**
6158978	063280008010	**MSN8008**
6160440	063280020010	**MSN8020**
6160440	063227501010	**MSN207**
6167032	063280008010	**MSN8008**
6168500	063280014010	**MSN8014**
6168501	063280014010	**MSN8014**
6174535	063280008010	**MSN8008**
6177073	063280008010	**MSN8008**
6183758	063280014010	**MSN8014**
6183759	063280014010	**MSN8014**
6190023	063280014010	**MSN8014**
6199415	063280014010	**MSN8014**
6199417	063280014010	**MSN8014**
6199418	063280014010	**MSN8014**
6203379	063280008010	**MSN8008**
6203381	063280008010	**MSN8008**
6203382	063280014010	**MSN8014**
6203383	063280014010	**MSN8014**
6504722	063280014010	**MSN8014**
6504733	063280014010	**MSN8014**
6504744	063280014010	**MSN8014**
6544358	063280014010	**MSN8014**
6567030	063280014010	**MSN8014**
6667965	063280014010	**MSN8014**
6683311	063280008010	**MSN8008**
6775699	063280005010	**MSN8005**
6775701	063280005010	**MSN8005**
6775702	063280005010	**MSN8005**
6775703	063280005010	**MSN8005**
6816673	063280014010	**MSN8014**
6816674	063280014010	**MSN8014**

CROSS REFERENCE	MAGNETI MARELLI	
	LONG	SHORT
FORD		
6816675	063280014010	**MSN8014**
6816676	063280014010	**MSN8014**
6816677	063280014010	**MSN8014**
6943372	063280014010	**MSN8014**
6996767	063280020010	**MSN8020**
7003145	063280008010	**MSN8008**
7003146	063280008010	**MSN8008**
7177333	063280005010	**MSN8005**
7275964	063280006010	**MSN8006**
7412672	063280008010	**MSN8008**
702000150	063227569010	**MSN202**
1S4U11000AA	063280008010	**MSN8008**
1S7U11000AB	063280023010	**MSN8023**
1S7U11000AC	063280023010	**MSN8023**
1S7U11000AD	063280023010	**MSN8023**
1S7U11000AE	063280023010	**MSN8023**
1S7U11000AF	063280023010	**MSN8023**
1S7U11000BA	063280022010	**MSN8022**
1S7U11000BB	063280022010	**MSN8022**
1S7U11000BC	063280022010	**MSN8022**
2C1611000AA	063187051010	**MSN870**
2S6U11000EA	063280021010	**MSN8021**
2S6U11000EB	063280021010	**MSN8021**
2S6U11000EC	063280021010	**MSN8021**
2S6U11000ED	063280021010	**MSN8021**
2S6U11000EE	063280021010	**MSN8021**
2S7T11000AA	063280032010	**MSN8032**
2S7T11000AB	063280032010	**MSN8032**
2S7T11000AC	063280032010	**MSN8032**
2S7T11000DA	063280022010	**MSN8022**
2S7T11000DB	063280022010	**MSN8022**
2S7T11000DC	063280022010	**MSN8022**
2T1411000AA	063280034010	**MSN8034**
2T1411000BA	063280034010	**MSN8034**
2T1411000BB	063280034010	**MSN8034**
2T1411000BC	063280034010	**MSN8034**
3M5T11000AB	063280027010	**MSN8027**
3M5T11000AC	063280027010	**MSN8027**
3M5T11000AD	063280027010	**MSN8027**
3M5T11000AE	063280027010	**MSN8027**
3M5T11000CB	063280029010	**MSN8029**
3M5T11000CC	063280029010	**MSN8029**
3M5T11000CD	063280029010	**MSN8029**
3M5T11000CE	063280029010	**MSN8029**
3M5T11000CF	063280029010	**MSN8029**

CROSS REFERENCE	MAGNETI MARELLI	
	LONG	SHORT
FORD		
3M5T11000DB	063280036010	**MSN8036**
3M5T11000DC	063280036010	**MSN8036**
3S7T11000AA	063280031010	**MSN8031**
3S7T11000AB	063280031010	**MSN8031**
3S7T11000AC	063280031010	**MSN8031**
3S7T11000AD	063280031010	**MSN8031**
4M5T11000AA	063280028010	**MSN8028**
4M5T11000AB	063280028010	**MSN8028**
4M5T11000AC	063280028010	**MSN8028**
4M5T11000FA	063280036010	**MSN8036**
4M5T11000FB	063280036010	**MSN8036**
4M5T11000FC	063280036010	**MSN8036**
4M5T11000FD	063280036010	**MSN8036**
6G9N11000FA	063280036010	**MSN8036**
715F11000JA	063227501010	**MSN207**
715F11000MA	063227501010	**MSN207**
755F11000AA	063227501010	**MSN207**
755F11000AB	063227501010	**MSN207**
755F11000BB	063227501010	**MSN207**
755F11000BB	063280020010	**MSN8020**
775F11000BB	063227501010	**MSN207**
795F11000AA	063280020010	**MSN8020**
795F11000AA	063227501010	**MSN207**
795F11000CA	063227501010	**MSN207**
795F11000CA	063280020010	**MSN8020**
835F11000AA	063227501010	**MSN207**
835F11000AA	063280020010	**MSN8020**
835F11000AB	063280020010	**MSN8020**
835F11000AB	063227501010	**MSN207**
835F11000AC	063280020010	**MSN8020**
835F11000AC	063227501010	**MSN207**
835F11000BA	063280020010	**MSN8020**
835F11000BB	063280020010	**MSN8020**
835F11000BB	063227501010	**MSN207**
835FX11000B	063227501010	**MSN207**
835FX11000BB	063227501010	**MSN207**
835FX11000BB	063280020010	**MSN8020**
835X11000AC	063227501010	**MSN207**
84AB11000AA	063280008010	**MSN8008**
84AB11000AB	063280008010	**MSN8008**
84AB11000AC	063280008010	**MSN8008**
86AB11000A1A	063280008010	**MSN8008**
86AB11000A2A	063280008010	**MSN8008**
86AB11000AA	063280008010	**MSN8008**
86AB11000BA	063280014010	**MSN8014**

CROSS REFERENCE	MAGNETI MARELLI	
	LONG	SHORT
FORD		
86AB11000CA	063280014010	**MSN8014**
86AB11000DA	063280014010	**MSN8014**
86AB11000EA	063280014010	**MSN8014**
86AB11000FA	063280014010	**MSN8014**
86AB11000GA	063280014010	**MSN8014**
86AB11000HA	063280014010	**MSN8014**
86AB11000JA	063280014010	**MSN8014**
86AB11000KA	063280014010	**MSN8014**
86AB11000RA	063280014010	**MSN8014**
86AB11000SA	063280014010	**MSN8014**
86AB11000TA	063280014010	**MSN8014**
86AB11000VA	063280014010	**MSN8014**
86GB11000AA	063280014010	**MSN8014**
86GB11000CA	063280014010	**MSN8014**
86GB11000EA	063280014010	**MSN8014**
86GB11000GA	063280014010	**MSN8014**
87BB11000BA	063280014010	**MSN8014**
87GB11000CA	063280014010	**MSN8014**
87GB11000CB	063280014010	**MSN8014**
884F 11000 AA	063280020010	**MSN8020**
89AB11000AA	063280008010	**MSN8008**
89AB11000BA	063280008010	**MSN8008**
89AB11000CA	063280008010	**MSN8008**
89FB11000AA	063280014010	**MSN8014**
89FB11000BA	063280014010	**MSN8014**
89FX11000BA	063280014010	**MSN8014**
91AB11000AA	063280014010	**MSN8014**
91AB11000AB	063280014010	**MSN8014**
91AB11000CA	063280014010	**MSN8014**
91AB11000CB	063280014010	**MSN8014**
91AB11000EA	063280014010	**MSN8014**
91AB11000FA	063280008010	**MSN8008**
91AB11000FB	063280008010	**MSN8008**
91AB11000HA	063280008010	**MSN8008**
91AB11000HB	063280008010	**MSN8008**
91AB11000JA	063280014010	**MSN8014**
91AB11000JB	063280014010	**MSN8014**
91AB11000KA	063280014010	**MSN8014**
91AB11000KB	063280014010	**MSN8014**
91AX11000AB	063280014010	**MSN8014**
91AX11000HA	063280008010	**MSN8008**
91AX11000JA	063280014010	**MSN8014**
91AX11000KA	063280014010	**MSN8014**
91AX11000KB	063280014010	**MSN8014**
91BB11000JA	063280014010	**MSN8014**

CROSS REFERENCE	MAGNETI MARELLI	
	LONG	SHORT
FORD		
92AB11000AA	063280014010	**MSN8014**
92AB11000CA	063280014010	**MSN8014**
92AB11000CB	063280014010	**MSN8014**
92AB11000DA	063280014010	**MSN8014**
92AB11000FA	063280014010	**MSN8014**
92AB11000FB	063280014010	**MSN8014**
92AB11000GA	063280014010	**MSN8014**
92AB11000GB	063280014010	**MSN8014**
92AB11000HA	063280008010	**MSN8008**
92AB11000HB	063280008010	**MSN8008**
92AB11000HB	063521101040	**MSN2086**
92AX11000FA	063280014010	**MSN8014**
92AX11000HA	063280008010	**MSN8008**
93BB11000AB	063280005010	**MSN8005**
93BB11000AB	063227602010	**MSN199**
93BB11000CB	063227602010	**MSN199**
93BB11000CB	063280005010	**MSN8005**
93BB11000DB	063227602010	**MSN199**
93BB11000DB	063280005010	**MSN8005**
93BB11000HB	063280005010	**MSN8005**
93BB11000HC	063280005010	**MSN8005**
95FB11000BB	063280006010	**MSN8006**
95FB11000BC	063280006010	**MSN8006**
95FB11000BD	063280006010	**MSN8006**
96BB11000A3C	063280005010	**MSN8005**
96BB11000AA	063280005010	**MSN8005**
96BB11000AB	063280005010	**MSN8005**
96BB11000AC	063280005010	**MSN8005**
96FB11000KB	063280010010	**MSN8010**
96FB11000KC	063280010010	**MSN8010**
96FB11000KD	063280010010	**MSN8010**
96FB11000LB	063280010010	**MSN8010**
96FB11000LC	063280010010	**MSN8010**
96FB11000LD	063280010010	**MSN8010**
96FB11000MB	063280006010	**MSN8006**
96FB11000MC	063280006010	**MSN8006**
96FB11000MD	063280006010	**MSN8006**
96FB11000ME	063280006010	**MSN8006**
97BB11000B3D	063280008010	**MSN8008**
97BB11000B3D	063280006010	**MSN8006**
97BB11000BB	063280008010	**MSN8008**
97BB11000BB	063280006010	**MSN8006**
97BB11000BC	063280006010	**MSN8006**
97BB11000BC	063280008010	**MSN8008**
97KB11000AB	063280006010	**MSN8006**

CROSS REFERENCE	MAGNETI MARELLI	
	LONG	SHORT
FORD		
97KB11000AC	063280006010	**MSN8006**
97VB11000AA	063280020010	**MSN8020**
97VB11000AB	063280020010	**MSN8020**
98AB11000AC	063280008010	**MSN8008**
98AB11000AD	063280008010	**MSN8008**
98AB11000BB	063280010010	**MSN8010**
98AB11000BC	063280010010	**MSN8010**
98AB11000BD	063280010010	**MSN8010**
98AB11000CA	063280010010	**MSN8010**
98AB11000CB	063280010010	**MSN8010**
98AB11000CC	063280010010	**MSN8010**
98AB11000CD	063280010010	**MSN8010**
98VB11000B1A	063280020010	**MSN8020**
98VB11000B3A	063280020010	**MSN8020**
98VB11000B3B	063280020010	**MSN8020**
R2S7T11000DB	063280022010	**MSN8022**
R755F11000BB	063227501010	**MSN207**
R835F11000AC	063280020010	**MSN8020**
R835F11000BB	063227501010	**MSN207**
R835F11000BB	063280020010	**MSN8020**
R835X11000AC	063280020010	**MSN8020**
R835X11000AC	063227501010	**MSN207**
R835X11000AC1	063280020010	**MSN8020**
R95FB11000BB	063280006010	**MSN8006**
R95FB11000BC	063280006010	**MSN8006**
R95FB11000BD	063280006010	**MSN8006**
R95FB11000BD1	063280006010	**MSN8006**
R96FB11000KC	063280010010	**MSN8010**
R96FB11000KD	063280010010	**MSN8010**
R96FB11000KD1	063280010010	**MSN8010**
R96FB11000LC	063280010010	**MSN8010**
R96FB11000LD	063280010010	**MSN8010**
R97KB11000AB	063280006010	**MSN8006**
R97KB11000AC	063280006010	**MSN8006**
R97KB11000AC1	063280006010	**MSN8006**
RYC1U11000AF	063280022010	**MSN8022**
RYC1U11000AG	063280022010	**MSN8022**
XS7U11000AE	063280022010	**MSN8022**
XS7U11000C3A	063280005010	**MSN8005**
XS7U11000C4A	063280005010	**MSN8005**
XS7U11000CB	063280005010	**MSN8005**
XSU11000AE	063280022010	**MSN8022**
YC1U11000AA	063187051010	**MSN870**
YC1U11000AA	063280022010	**MSN8022**
YC1U11000AB	063280022010	**MSN8022**

CROSS REFERENCE	MAGNETI MARELLI	
	LONG	SHORT
FORD		
YC1U11000AB	063187051010	**MSN870**
YC1U11000AC	063187051010	**MSN870**
YC1U11000AC	063280022010	**MSN8022**
YC1U11000AD	063187051010	**MSN870**
YC1U11000AD	063280022010	**MSN8022**
YC1U11000AE	063187051010	**MSN870**
YC1U11000AE	063280022010	**MSN8022**
YC1U11000AF	063187051010	**MSN870**
YC1U11000AF	063280022010	**MSN8022**
YC1U11000AG	063280022010	**MSN8022**
YC1U11000AG	063187051010	**MSN870**
YS4U11000AA	063280010010	**MSN8010**
YS4U11000AB	063280010010	**MSN8010**
YS4U11000AC	063280010010	**MSN8010**
YS4U11000BA	063280010010	**MSN8010**
YS4U11000BB	063280010010	**MSN8010**
YS4U11000DA	063227602010	**MSN199**
YS4U11000DA	063280005010	**MSN8005**
YS4U11000DB	063227602010	**MSN199**
YS4U11000DB	063280005010	**MSN8005**
YS4U11000DC	063227602010	**MSN199**
FRIESEN		
8010450	063223085010	**MSN520**
8010450	063223101010	**MSN274**
8010950	063227501010	**MSN207**
8011060	063217410010	**MSN242**
8011060	063217148010	**MSN229**
8011080	063217154010	**MSN230**
8011891	063222908010	**MSN290**
8013200	063521081800	**MSN2020**
8013360	063280014010	**MSN8014**
8013620	063223085010	**MSN520**
8013620	063223101010	**MSN274**
8013940	063101023010	**MSN410**
8014711	063222908010	**MSN290**
8014860	063521120350	**MSN2004**
8015090	063280008010	**MSN8008**
8016120	063521070630	**MSN2015**
8016240	063521101060	**MSN2028**
8016401	063521070470	**MSN2012**
8016470	063280005010	**MSN8005**
8017030	063101015010	**MSN829**
8017041	063222908010	**MSN290**
8017060	063280010010	**MSN8010**
8017530	063280006010	**MSN8006**

CROSS REFERENCE	MAGNETI MARELLI	
	LONG	SHORT
FRIESEN		
8017781	063102003010	**MSN603**
8017790	063113002010	**MSN816**
8018151	063227592010	**MSN203**
8018161	063227593010	**MSN540**
8018230	063280014010	**MSN8014**
8018450	063521082040	**MSN2001**
8018880	063521070910	**MSN2017**
8022591	063280901010	**MSN882**
8022591	063522605010	**MSN2605**
8022591	063522620010	**MSN2620**
8052270	063280051010	**MSN8051**
8052286	063280052010	**MSN8052**
8052294	063280052010	**MSN8052**
8052505	063522620010	**MSN2620**
8052506	063522623010	**MSN2623**
8052522	063522617010	**MSN2617**
8055232	063227602010	**MSN199**
8070503	063522611010	**MSN2611**
8070504	063522619010	**MSN2619**
8070508	063522618010	**MSN2618**
8070901	063522601010	**MSN2601**
8070906	063522607010	**MSN2607**
8080012	063102018010	**MSN923**
8080021	063280020010	**MSN8020**
8080021	063227501010	**MSN207**
8080022	063114014010	**MSN801**
8080043	063103022010	**MSN924**
8080046	063191007010	**MSN800**
8080057	063280032010	**MSN8032**
8080068	063522612010	**MSN2612**
8080078	063522621010	**MSN2621**
8080094	063280022010	**MSN8022**
8080094	063187051010	**MSN870**
8080113	063280045010	**MSN8045**
8080115	063111027010	**MSN806**
8080192	063522616010	**MSN2616**
8080202	063102022010	**MSN418**
8080222	063522609010	**MSN2609**
8080222	063522622010	**MSN2622**
8080247	063280902010	**MSN883**
8811140	063523623050	**MSN2053**
8811160	063217226010	**MSN237**
8811220	063216831010	**MSN219**
8811270	063523680010	**MSN2055**
8811280	063523683010	**MSN2058**

CROSS REFERENCE	MAGNETI MARELLI	
	LONG	SHORT
FRIESEN		
8811310	063216731010	**MSN213**
8811330	063216741010	**MSN521**
8811330	063216731010	**MSN213**
8811340	063216733010	**MSN214**
8811570	063524160020	**MSN2060**
8812670	063217126010	**MSN227**
8812670	063216831010	**MSN219**
8813871	063216851010	**MSN221**
8817240	063522310330	**MSN2049**
8817880	063523680820	**MSN2057**
8817990	063522310030	**MSN2042**
8818980	063522300070	**MSN2039**
8819010	063522310110	**MSN2045**
8819020	063522300060	**MSN2038**
8820070	063522310290	**MSN2048**
HC-PARTS		
CS1037	063521090180	**MSN2084**
CS1037	063112003010	**MSN209**
CS1038	063222908010	**MSN290**
CS1042	063111007010	**MSN807**
CS1045	063113002010	**MSN816**
CS1050	063280010010	**MSN8010**
CS1053	063521074110	**MSN2076**
CS1053	063521070660	**MSN2069**
CS109	063227470010	**MSN184**
CS109	063227488010	**MSN175**
CS1109	063114014010	**MSN801**
CS1118	063521093070	**MSN2009**
CS1125	063102021010	**MSN402**
CS1130	063522300060	**MSN2038**
CS1192	063103025010	**MSN927**
CS1195	063111007010	**MSN807**
CS1198	063522230130	**MSN2006**
CS1203	063521093070	**MSN2009**
CS1206	063191007010	**MSN800**
CS1210	063522607010	**MSN2607**
CS1212	063521082040	**MSN2001**
CS1212	063113003010	**MSN824**
CS1213	063521070910	**MSN2017**
CS1245	063280022010	**MSN8022**
CS1245	063187051010	**MSN870**
CS1246	063280023010	**MSN8023**
CS1248	063522310110	**MSN2045**
CS1261	063523680820	**MSN2057**
CS1264	063113002010	**MSN816**

CROSS REFERENCE	MAGNETI MARELLI	
	LONG	SHORT
HC-PARTS		
CS1265	063193001010	**MSN808**
CS1268	063522310160	**MSN2008**
CS1275	063280021010	**MSN8021**
CS1334	063521074370	**MSN2078**
CS1334	063280045010	**MSN8045**
CS1335	063521092680	**MSN2085**
CS1336	063280034010	**MSN8034**
CS1341	063280029010	**MSN8029**
CS1346	063280045010	**MSN8045**
CS1377	063280036010	**MSN8036**
CS1379	063102022010	**MSN418**
CS1379	063102021010	**MSN402**
CS1402	063280028010	**MSN8028**
CS1403	063280027010	**MSN8027**
CS1422	063522629010	**MSN2629**
CS1426	063280031010	**MSN8031**
CS1433	063522626010	**MSN2626**
CS1449	063522230130	**MSN2006**
CS162	063521074920	**MSN2117**
CS200	063227569010	**MSN202**
CS230	063217410010	**MSN242**
CS232	063522310100	**MSN2044**
CS240	063523620390	**MSN2050**
CS240	063216831010	**MSN219**
CS285	063223085010	**MSN520**
CS285	063223101010	**MSN274**
CS289	063217154010	**MSN230**
CS329	063280014010	**MSN8014**
CS331	063522608010	**MSN2608**
CS333	063216851010	**MSN221**
CS337	063280020010	**MSN8020**
CS337	063227501010	**MSN207**
CS371	063101023010	**MSN410**
CS372	063522601010	**MSN2601**
CS374	063521100250	**MSN2027**
CS394	063216741010	**MSN521**
CS502	063524160110	**MSN2061**
CS502	063524160520	**MSN2063**
CS572	063522235040	**MSN2036**
CS581	063521120410	**MSN2029**
CS592	063280014010	**MSN8014**
CS594	063521084000	**MSN2083**
CS613	063280006010	**MSN8006**
CS682	063522300090	**MSN2040**
CS685	063280014010	**MSN8014**

CROSS REFERENCE	MAGNETI MARELLI	
	LONG	SHORT
HC-PARTS		
CS693	063227486010	**MSN180**
CS715	063521081760	**MSN2079**
CS719	063227602010	**MSN199**
CS724	063280014010	**MSN8014**
CS784	063521081800	**MSN2020**
CS795	063217121010	**MSN226**
CS796	063101018010	**MSN400**
CS796	063521130060	**MSN2091**
CS796	063101015010	**MSN829**
CS800	063103025010	**MSN927**
CS879	063522612010	**MSN2612**
CS883	063223085010	**MSN520**
CS883	063223101010	**MSN274**
CS90	063222908010	**MSN290**
CS960	063280010010	**MSN8010**
CS961	063280032010	**MSN8032**
CS971	063280006010	**MSN8006**
CS975	063223085010	**MSN520**
CS975	063223101010	**MSN274**
CS976	063521090680	**MSN2002**
CS977	063280020010	**MSN8020**
CS981	063102003010	**MSN603**
CS986	063280006010	**MSN8006**
JS1000	063522625010	**MSN2625**
JS1234	063522609010	**MSN2609**
JS1234	063522622010	**MSN2622**
JS1312	063280902010	**MSN883**
JS1369	063280059010	**MSN8059**
JS344	063522613010	**MSN2613**
JS365	063522614010	**MSN2614**
JS628	063522617010	**MSN2617**
JS637	063522624010	**MSN2624**
JS640	063522625010	**MSN2625**
HELLA		
8EA 011 350-071	063521120410	**MSN2029**
8EA 011 350-081	063521084000	**MSN2083**
8EA 011 350-101	063521070470	**MSN2012**
8EA 011 350-131	063521250420	**MSN2112**
8EA 725 965-001	063227488010	**MSN175**
8EA 725 965-001	063227470010	**MSN184**
8EA 725 973-001	063523683090	**MSN2059**
8EA 725 976-001	063280014010	**MSN8014**
8EA 726 005-001	063521074920	**MSN2117**
8EA 726 005-001	063521120350	**MSN2004**
8EA 726 005-001	063522602010	**MSN2602**

CROSS REFERENCE	MAGNETI MARELLI	
	LONG	SHORT
HELLA		
8EA 726 022-001	063524160020	**MSN2060**
8EA 726 026-001	063227569010	**MSN202**
8EA 726 027-001	063227599010	**MSN541**
8EA 726 029-001	063217148010	**MSN229**
8EA 726 029-001	063217410010	**MSN242**
8EA 726 030-001	063217226010	**MSN237**
8EA 726 031-001	063522310100	**MSN2044**
8EA 726 031-001	063216741010	**MSN521**
8EA 726 031-001	063216731010	**MSN213**
8EA 726 032-001	063523620390	**MSN2050**
8EA 726 032-001	063217126010	**MSN227**
8EA 726 045-001	063280014010	**MSN8014**
8EA 726 048-001	063223085010	**MSN520**
8EA 726 048-001	063223101010	**MSN274**
8EA 726 049-001	063521100250	**MSN2027**
8EA 726 050-001	063217154010	**MSN230**
8EA 726 054-001	063521120380	**MSN2089**
8EA 726 077-001	063280014010	**MSN8014**
8EA 726 079-001	063522608010	**MSN2608**
8EA 726 081-001	063216851010	**MSN221**
8EA 726 083-001	063216884010	**MSN878**
8EA 726 085-001	063280020010	**MSN8020**
8EA 726 085-001	063227501010	**MSN207**
8EA 726 089-001	063280008010	**MSN8008**
8EA 726 119-001	063101023010	**MSN410**
8EA 726 120-001	063522601010	**MSN2601**
8EA 726 122-001	063521100250	**MSN2027**
8EA 726 142-001	063216741010	**MSN521**
8EA 726 142-001	063216731010	**MSN213**
8EA 726 150-001	063524160110	**MSN2061**
8EA 726 150-001	063524160520	**MSN2063**
8EA 726 159-001	063296842010	**MSN886**
8EA 726 160-001	063223101010	**MSN274**
8EA 726 163-001	063522601010	**MSN2601**
8EA 726 164-001	063521120350	**MSN2004**
8EA 726 172-001	063522602010	**MSN2602**
8EA 726 196-001	063217121010	**MSN226**
8EA 726 196-001	063207159010	**MSN877**
8EA 726 196-001	063217126010	**MSN227**
8EA 726 205-001	063521120410	**MSN2029**
8EA 726 216-001	063280014010	**MSN8014**
8EA 726 218-001	063521084000	**MSN2083**
8EA 726 238-001	063280014010	**MSN8014**
8EA 726 246-001	063222908010	**MSN290**
8EA 726 421-001	063522625010	**MSN2625**

CROSS REFERENCE	MAGNETI MARELLI	
	LONG	SHORT
HELLA		
8EA 726 436-001	063522623010	**MSN2623**
8EA 726 436-001	063522613010	**MSN2613**
8EA 726 441-001	063522620010	**MSN2620**
8EA 726 514-001	063522617010	**MSN2617**
8EA 726 523-001	063522624010	**MSN2624**
8EA 726 550-001	063522625010	**MSN2625**
8EA 730 182-001	063521070730	**MSN2071**
8EA 730 182-001	063521070680	**MSN2070**
8EA 730 183-001	063280008010	**MSN8008**
8EA 730 188-001	063521120380	**MSN2089**
8EA 730 194-001	063521101380	**MSN2088**
8EA 730 197-001	063521070470	**MSN2012**
8EA 730 198-001	063216896010	**MSN224**
8EA 730 198-001	063522300090	**MSN2040**
8EA 730 201-001	063280014010	**MSN8014**
8EA 730 209-001	063227486010	**MSN180**
8EA 730 209-001	063227592010	**MSN203**
8EA 730 218-001	063227488010	**MSN175**
8EA 730 218-001	063227470010	**MSN184**
8EA 730 219-001	063227592010	**MSN203**
8EA 730 219-001	063227486010	**MSN180**
8EA 731 759-001	063521081760	**MSN2079**
8EA 731 763-001	063280005010	**MSN8005**
8EA 731 767-001	063521130070	**MSN2092**
8EA 731 768-001	063280014010	**MSN8014**
8EA 731 778-001	063521120440	**MSN2090**
8EA 731 780-001	063280005010	**MSN8005**
8EA 731 785-001	063217121010	**MSN226**
8EA 731 805-001	063522603010	**MSN2603**
8EA 732 651-001	063521130060	**MSN2091**
8EA 732 651-001	063101018010	**MSN400**
8EA 732 659-001	063521071030	**MSN2073**
8EA 732 894-001	063521070620	**MSN2014**
8EA 737 082-001	063223085010	**MSN520**
8EA 737 082-001	063223101010	**MSN274**
8EA 737 106-001	063280010010	**MSN8010**
8EA 737 107-001	063280032010	**MSN8032**
8EA 737 112-001	063280006010	**MSN8006**
8EA 737 124-001	063522621010	**MSN2621**
8EA 737 147-001	063521250420	**MSN2112**
8EA 737 148-001	063223085010	**MSN520**
8EA 737 148-001	063223101010	**MSN274**
8EA 737 149-001	063521090680	**MSN2002**
8EA 737 150-001	063280020010	**MSN8020**
8EA 737 151-001	063102003010	**MSN603**

CROSS REFERENCE	MAGNETI MARELLI	
	LONG	SHORT
HELLA		
8EA 737 184-001	063280071010	**MSN8071**
8EA 737 191-001	063522625010	**MSN2625**
8EA 737 235-001	063280006010	**MSN8006**
8EA 737 236-001	063227569010	**MSN202**
8EA 737 237-001	063521240260	**MSN2110**
8EA 737 237-001	063521240220	**MSN2109**
8EA 737 245-001	063216884010	**MSN878**
8EA 737 249-001	063227593010	**MSN540**
8EA 737 250-001	063227602010	**MSN199**
8EA 737 254-001	063112003010	**MSN209**
8EA 737 254-001	063521090180	**MSN2084**
8EA 737 273-001	063222908010	**MSN290**
8EA 737 291-001	063111007010	**MSN807**
8EA 737 293-001	063521092500	**MSN2025**
8EA 737 294-001	063113002010	**MSN816**
8EA 737 318-001	063280010010	**MSN8010**
8EA 737 340-001	063521074110	**MSN2076**
8EA 737 340-001	063521070660	**MSN2069**
8EA 737 362-001	063280051010	**MSN8051**
8EA 737 406-001	063521210280	**MSN2099**
8EA 737 417-001	063521074420	**MSN2019**
8EA 737 419-001	063280052010	**MSN8052**
8EA 737 488-001	063521074030	**MSN2074**
8EA 737 504-001	063114014010	**MSN801**
8EA 737 506-001	063280005010	**MSN8005**
8EA 737 526-001	063114014010	**MSN801**
8EA 737 540-001	063522310330	**MSN2049**
8EA 737 578-001	063522187740	**MSN2005**
8EA 737 579-001	063521210260	**MSN2098**
8EA 737 609-001	063102021010	**MSN402**
8EA 737 609-001	063101023010	**MSN410**
8EA 737 660-001	063521092500	**MSN2025**
8EA 737 708-001	063521082170	**MSN2081**
8EA 737 767-001	063521250480	**MSN2113**
8EA 737 790-001	063521120350	**MSN2004**
8EA 737 815-001	063522602010	**MSN2602**
8EA 737 823-001	063102018010	**MSN923**
8EA 737 823-001	063101018010	**MSN400**
8EA 737 842-001	063111007010	**MSN807**
8EA 737 852-001	063521210160	**MSN2097**
8EA 737 853-001	063522230130	**MSN2006**
8EA 737 865-001	063280053010	**MSN8053**
8EA 737 880-001	063191007010	**MSN800**
8EA 737 891-001	063521240200	**MSN2108**
8EA 737 893-001	063522607010	**MSN2607**

CROSS REFERENCE	MAGNETI MARELLI	
	LONG	SHORT
HELLA		
8EA 737 901-001	063113003010	**MSN824**
8EA 737 905-001	063521070910	**MSN2017**
8EA 737 906-001	063521060140	**MSN2067**
8EA 737 914-001	063280054010	**MSN8054**
8EA 737 919-001	063280022010	**MSN8022**
8EA 737 919-001	063187051010	**MSN870**
8EA 737 920-001	063280023010	**MSN8023**
8EA 737 934-001	063280055010	**MSN8055**
8EA 737 962-001	063280049010	**MSN8049**
8EA 737 971-001	063280055010	**MSN8055**
8EA 737 973-001	063522609010	**MSN2609**
8EA 737 973-001	063522622010	**MSN2622**
8EA 737 988-001	063521120350	**MSN2004**
8EA 738 002-001	063280049010	**MSN8049**
8EA 738 022-001	063523680820	**MSN2057**
8EA 738 026-001	063113002010	**MSN816**
8EA 738 030-001	063522310160	**MSN2008**
8EA 738 043-001	063280054010	**MSN8054**
8EA 738 080-001	063280021010	**MSN8021**
8EA 738 092-001	063522310030	**MSN2042**
8EA 738 095-001	063280050010	**MSN8050**
8EA 738 101-001	063522611010	**MSN2611**
8EA 738 105-001	063522619010	**MSN2619**
8EA 738 108-001	063521204000	**MSN2093**
8EA 738 119-001	063521230160	**MSN2106**
8EA 738 151-001	063523803010	**MSN2801**
8EA 738 156-001	063521230120	**MSN2104**
8EA 738 157-001	063521214080	**MSN2102**
8EA 738 158-001	063521204100	**MSN2096**
8EA 738 165-001	063521230140	**MSN2105**
8EA 738 166-001	063521204080	**MSN2095**
8EA 738 167-001	063522620010	**MSN2620**
8EA 738 167-001	063522605010	**MSN2605**
8EA 738 168-001	063280902010	**MSN883**
8EA 738 199-001	063521204060	**MSN2094**
8EA 738 232-001	063521074370	**MSN2078**
8EA 738 232-001	063280045010	**MSN8045**
8EA 738 240-001	063521092680	**MSN2085**
8EA 738 258-011	063521214020	**MSN2101**
8EA 738 258-091	063280029010	**MSN8029**
8EA 738 258-101	063102022010	**MSN418**
8EA 738 258-101	063102021010	**MSN402**
8EA 738 258-131	063522628010	**MSN2628**
8EA 738 258-141	063280058010	**MSN8058**
8EA 738 258-151	063521093000	**MSN2026**

CROSS REFERENCE	MAGNETI MARELLI	
	LONG	SHORT
HELLA		
8EA 738 258-201	063280034010	**MSN8034**
8EA 738 258-271	063280045010	**MSN8045**
8EA 738 258-281	063280036010	**MSN8036**
8EA 738 258-311	063280008010	**MSN8008**
8EA 738 258-401	063280058010	**MSN8058**
8EA 738 258-421	063280048010	**MSN8048**
8EA 738 258-541	063521230180	**MSN2107**
8EA 738 258-551	063280028010	**MSN8028**
8EA 738 258-561	063280027010	**MSN8027**
8EA 738 258-571	063521214120	**MSN2103**
8EA 738 258-661	063522629010	**MSN2629**
8EA 738 258-881	063522626010	**MSN2626**
8EA 738 258-921	063521074270	**MSN2077**
HERTH+BUSS ELPARTS/JAKOPARTS		
42001004	063280023010	**MSN8023**
42001021	063280021010	**MSN8021**
42001027	063280027010	**MSN8027**
42001028	063280028010	**MSN8028**
42001031	063280031010	**MSN8031**
42001034	063280034010	**MSN8034**
42001036	063280036010	**MSN8036**
42001070	063227602010	**MSN199**
42001071	063521082390	**MSN2119**
42001071	063113002010	**MSN816**
42001083	063227470010	**MSN184**
42001083	063227488010	**MSN175**
42001222	063222908010	**MSN290**
42001233	063217154010	**MSN230**
42001234	063223085010	**MSN520**
42001234	063223101010	**MSN274**
42001246	063217226010	**MSN237**
42010950	063227501010	**MSN207**
42011200	063523623050	**MSN2053**
42011330	063216741010	**MSN521**
42011330	063216731010	**MSN213**
42013200	063521081800	**MSN2020**
42013360	063280014010	**MSN8014**
42013590	063521130070	**MSN2092**
42013610	063522601010	**MSN2601**
42013940	063101023010	**MSN410**
42014701	063521101250	**MSN2003**
42014701	063521100250	**MSN2027**
42014860	063522602010	**MSN2602**
42015150	063280014010	**MSN8014**
42016120	063521081760	**MSN2079**

CROSS REFERENCE	MAGNETI MARELLI	
	LONG	SHORT
HERTH+BUSS ELPARTS/JAKOPARTS		
42016290	063521120380	**MSN2089**
42016380	063521074030	**MSN2074**
42016530	063521070630	**MSN2015**
42016870	063521100250	**MSN2027**
42016870	063112003010	**MSN209**
42016980	063521250420	**MSN2112**
42017030	063521130060	**MSN2091**
42017030	063101015010	**MSN829**
42017060	063280010010	**MSN8010**
42017110	063521074420	**MSN2019**
42017120	063521120350	**MSN2004**
42017300	063280071010	**MSN8071**
42017530	063280006010	**MSN8006**
42017770	063111007010	**MSN807**
42017770	063521070660	**MSN2069**
42017781	063102003010	**MSN603**
42017830	063521210280	**MSN2099**
42018310	063521084000	**MSN2083**
42018900	063521092680	**MSN2085**
42018950	063521093070	**MSN2009**
42018960	063522230130	**MSN2006**
42019940	063521060140	**MSN2067**
42020170	063522310160	**MSN2008**
42020181	063280020010	**MSN8020**
42020220	063521204080	**MSN2095**
42020230	063521214020	**MSN2101**
42020250	063521230120	**MSN2104**
42020260	063521230140	**MSN2105**
42020290	063521204060	**MSN2094**
42020300	063521230180	**MSN2107**
42020330	063521204100	**MSN2096**
42020780	063521204000	**MSN2093**
42063193	063193001010	**MSN808**
42107429	063521074370	**MSN2078**
42107429	063280045010	**MSN8045**
42109300	063521093000	**MSN2026**
42114903	063102018010	**MSN923**
42114903	063101018010	**MSN400**
42114903	063103025010	**MSN927**
42114905	063102021010	**MSN402**
42142804	063227602010	**MSN199**
42231008	063522310290	**MSN2048**
42263570	063227592010	**MSN203**
42360038	063523683010	**MSN2058**
42362062	063217148010	**MSN229**

CROSS REFERENCE	MAGNETI MARELLI	
	LONG	SHORT
HERTH+BUSS ELPARTS/JAKOPARTS		
42362062	063217410010	**MSN242**
42367028	063216831010	**MSN219**
42367029	063216896010	**MSN224**
42368001	063523680010	**MSN2055**
42368019	063216731010	**MSN213**
42415001	063524160780	**MSN2064**
42415001	063524160020	**MSN2060**
42458191	063280045010	**MSN8045**
42737919	063280022010	**MSN8022**
42737919	063187051010	**MSN870**
J5210300	063522615010	**MSN2615**
J5210302	063522606010	**MSN2606**
J5210504	063522619010	**MSN2619**
J5210508	063522618010	**MSN2618**
J5210510	063522609010	**MSN2609**
J5210510	063522622010	**MSN2622**
J5210518	063522626010	**MSN2626**
J5210521	063522626010	**MSN2626**
J5210900	063522604010	**MSN2604**
J5210904	063522612010	**MSN2612**
J5210906	063522607010	**MSN2607**
J5212121	063280059010	**MSN8059**
J5213009	063522625010	**MSN2625**
J5213019	063522624010	**MSN2624**
J5213022	063522625010	**MSN2625**
J5215006	063522613010	**MSN2613**
J5215022	063522617010	**MSN2617**
HITACHI		
S114-381	063521070780	**MSN2016**
S114-943A	063280060010	**MSN8060**
S114-947A	063280061010	**MSN8061**
S114-949A	063280062010	**MSN8062**
HYUNDAI		
36100-02511	063522611010	**MSN2611**
36100-02550	063522611010	**MSN2611**
36100-02555	063522611010	**MSN2611**
36100-21740	063522620010	**MSN2620**
36100-22800	063280901010	**MSN882**
36100-22800	063522620010	**MSN2620**
36100-22805	063522605010	**MSN2605**
36100-22805	063280901010	**MSN882**
36100-22850	063280902010	**MSN883**
36100-22855	063280902010	**MSN883**
36100-23100	063522621010	**MSN2621**
36100-23150	063522621010	**MSN2621**

CROSS REFERENCE	MAGNETI MARELLI	
	LONG	SHORT
HYUNDAI		
36100-23160	063522621010	**MSN2621**
36100-23170	063522626010	**MSN2626**
36100-23171	063522626010	**MSN2626**
36100-27000	063522609010	**MSN2609**
36100-27000	063522622010	**MSN2622**
36100-27010	063522609010	**MSN2609**
36100-27010	063522622010	**MSN2622**
36100-32510	063522617010	**MSN2617**
36100-32520	063522617010	**MSN2617**
36100-32530	063522617010	**MSN2617**
36100-32600	063522617010	**MSN2617**
36100-32630	063522617010	**MSN2617**
36100-37110	063522618010	**MSN2618**
36100-38090	063522619010	**MSN2619**
36100-42010	063522623010	**MSN2623**
36100-42011	063522623010	**MSN2623**
36100-42011	063522613010	**MSN2613**
36100-42200	063522613010	**MSN2613**
36100-42450	063187001010	**MSN872**
36100-47600	063522603010	**MSN2603**
36100-4X211	063522616010	**MSN2616**
HK9-88300	063522623010	**MSN2623**
S0001250299	063522626010	**MSN2626**
INTER HARV.		
322 819 2 R91	063296842010	**MSN886**
V 941 501	063523623050	**MSN2053**
ISKRA		
11130203	063217126010	**MSN227**
11130366	063216896010	**MSN224**
11130697	063216896010	**MSN224**
AZJ3237	063216896010	**MSN224**
AZJ3538	063217126010	**MSN227**
AZJ3594	063216896010	**MSN224**
IS 0005	063216733010	**MSN214**
IS 0201	063216884010	**MSN878**
IS 0203	063217148010	**MSN229**
IS 0203	063217126010	**MSN227**
IS 0216	063217226010	**MSN237**
IS 0364	063102018010	**MSN923**
IS 0364	063521130060	**MSN2091**
IS 0364	063101015010	**MSN829**
IS 0366	063216896010	**MSN224**
IS 0403	063216831010	**MSN219**
IS 0404	063521130070	**MSN2092**
IS 0407	063523683090	**MSN2059**

CROSS REFERENCE	MAGNETI MARELLI	
	LONG	SHORT
ISKRA		
IS 0432	063296843010	**MSN887**
IS 0490	063216741010	**MSN521**
IS 0490	063216731010	**MSN213**
IS 0491	063523680010	**MSN2055**
IS 0492	063522310100	**MSN2044**
IS 0492	063216731010	**MSN213**
IS 0500	063217410010	**MSN242**
IS 0500	063217148010	**MSN229**
IS 0509	063227602010	**MSN199**
IS 0520	063227488010	**MSN175**
IS 0521	063523623050	**MSN2053**
IS 0526	063227592010	**MSN203**
IS 0529	063521120410	**MSN2029**
IS 0532	063217148010	**MSN229**
IS 0532	063217410010	**MSN242**
IS 0551	063522300060	**MSN2038**
IS 0551	063523623050	**MSN2053**
IS 0552	063522300060	**MSN2038**
IS 0580	063522602010	**MSN2602**
IS 0586	063222908010	**MSN290**
IS 0612	063296843010	**MSN887**
IS 0651	063522601010	**MSN2601**
IS 0661	063101023010	**MSN410**
IS 0716	063521081760	**MSN2079**
IS 0728	063522310330	**MSN2049**
IS 0729	063522310290	**MSN2048**
IS 0743	063523683010	**MSN2058**
IS 0763	063101015010	**MSN829**
IS 0769	063227501010	**MSN207**
IS 0773	063521101060	**MSN2028**
IS 0841	063522300060	**MSN2038**
IS 0854	063521120380	**MSN2089**
IS 0862	063216833010	**MSN220**
IS 0969	063521120350	**MSN2004**
IS 0996	063521082040	**MSN2001**
IS 0996	063113003010	**MSN824**
IS 0997	063113002010	**MSN816**
IS 1029	063523680820	**MSN2057**
IS 1040	063521210280	**MSN2099**
IS 1041	063521250420	**MSN2112**
IS 1043	063521250350	**MSN2111**
IS 1046	063227593010	**MSN540**
IS 1073	063522230160	**MSN2035**
IS 1075	063521084000	**MSN2083**
IS 1094	063521210260	**MSN2098**

CROSS REFERENCE	MAGNETI MARELLI	
	LONG	SHORT
ISKRA		
IS 1101	063521090350	**MSN2023**
IS 1156	063521070460	**MSN2011**
IS 1164	063521093070	**MSN2009**
IS 1169	063522310110	**MSN2045**
IS 1170	063521070630	**MSN2015**
IS 1174	063521120350	**MSN2004**
IS 1262	063522300230	**MSN2041**
IS 1262	063522300070	**MSN2039**
IS 1263	063522235040	**MSN2036**
IS 1264	063522310160	**MSN2008**
IS 1268	063521074300	**MSN2018**
IS 1269	063522230130	**MSN2006**
IS 1279	063521070620	**MSN2014**
IS 1286	063280045010	**MSN8045**
IS 9019	063524160110	**MSN2061**
IS 9035	063524160020	**MSN2060**
IS 9035	063524160780	**MSN2064**
IS 9104	063524160520	**MSN2063**
IS 9136	063524160460	**MSN2062**
IS 9305	063521092500	**MSN2025**
IS 9308	063521074420	**MSN2019**
IS 9327	063521071030	**MSN2073**
IS 9327	063521120440	**MSN2090**
IS 9330	063521100250	**MSN2027**
IS 9331	063280020010	**MSN8020**
IS 9331	063227501010	**MSN207**
IS 9402	063521070630	**MSN2015**
IS 9403	063521070470	**MSN2012**
IS 9405	063521120350	**MSN2004**
IS 9407	063522623010	**MSN2623**
IS 9407	063522613010	**MSN2613**
IS 9409	063521120380	**MSN2089**
IS 9411	063521070680	**MSN2070**
IS 9411	063521070730	**MSN2071**
IS 9413	063521084000	**MSN2083**
IS 9418	063280022010	**MSN8022**
IS 9418	063187051010	**MSN870**
IS 9426	063521074110	**MSN2076**
IS 9426	063521070660	**MSN2069**
IS 9427	063522602010	**MSN2602**
IS 9428	063521092500	**MSN2025**
IS 9431	063521214080	**MSN2102**
IS 9438	063521093070	**MSN2009**
IS 9445	063522310100	**MSN2044**
IS 9445	063216731010	**MSN213**

CROSS REFERENCE	MAGNETI MARELLI	
	LONG	SHORT
ISKRA		
IS 9446	063216741010	**MSN521**
IS 9446	063216731010	**MSN213**
IS 9447	063216896010	**MSN224**
IS 9450	063521093000	**MSN2026**
ISJ0001	063522620010	**MSN2620**
ISJ0006	063522621010	**MSN2621**
ISJ0007	063522624010	**MSN2624**
ISJ0015	063522613010	**MSN2613**
ISJ0015	063522623010	**MSN2623**
ISJ0044	063522607010	**MSN2607**
ISJ0050	063522616010	**MSN2616**
ISJ0055	063522611010	**MSN2611**
ISJ0057	063522617010	**MSN2617**
ISJ0100	063522625010	**MSN2625**
ISJ0101	063522619010	**MSN2619**
IVECO		
106055	063217148010	**MSN229**
4448694	063217154010	**MSN230**
4682999	063216731010	**MSN213**
4691200	063217226010	**MSN237**
4692477	063216731010	**MSN213**
4699704	063216731010	**MSN213**
4699705	063216831010	**MSN219**
4701920	063216731010	**MSN213**
4702248	063216831010	**MSN219**
4703751	063216831010	**MSN219**
4706008	063216741010	**MSN521**
4706931	063217226010	**MSN237**
4710224	063217148010	**MSN229**
4711699	063217410010	**MSN242**
4712894	063217154010	**MSN230**
4713805	063217154010	**MSN230**
4713807	063217154010	**MSN230**
4716026	063216741010	**MSN521**
4719664	063217410010	**MSN242**
4719664	063217148010	**MSN229**
4728682	063523620390	**MSN2050**
4737754	063216731010	**MSN213**
4737755	063216831010	**MSN219**
4737756	063216741010	**MSN521**
4737759	063216896010	**MSN224**
4741699	063217154010	**MSN230**
4744811	063217226010	**MSN237**
4744841	063217226010	**MSN237**
4745930	063217148010	**MSN229**

CROSS REFERENCE	MAGNETI MARELLI	
	LONG	SHORT
IVECO		
4745930	063217410010	**MSN242**
4752403	063217226010	**MSN237**
4755108	063216731010	**MSN213**
4755109	063216831010	**MSN219**
4755109	063522300070	**MSN2039**
4755110	063216896010	**MSN224**
4755111	063216741010	**MSN521**
4763996	063216831010	**MSN219**
4784745	063524160110	**MSN2061**
4784747	063524160520	**MSN2063**
4786023	063524160460	**MSN2062**
4807373	063216831010	**MSN219**
4807374	063217410010	**MSN242**
4807374	063217148010	**MSN229**
4807375	063216831010	**MSN219**
4807376	063216896010	**MSN224**
4807377	063217226010	**MSN237**
4807378	063216731010	**MSN213**
4807379	063216731010	**MSN213**
4854185	063523680820	**MSN2057**
4856055	063217148010	**MSN229**
4856055	063217410010	**MSN242**
4856056	063217410010	**MSN242**
4856056	063217148010	**MSN229**
4892338	063522310160	**MSN2008**
7580192	063521100250	**MSN2027**
8029647	063522230130	**MSN2006**
42498138	063217148010	**MSN229**
42498138	063217410010	**MSN242**
42498140	063216733010	**MSN214**
42498142	063217226010	**MSN237**
42498145	063216741010	**MSN521**
42498149	063217148010	**MSN229**
42498150	063216731010	**MSN213**
42498212	063216731010	**MSN213**
42498212	063216741010	**MSN521**
42498230	063217226010	**MSN237**
42498505	063217148010	**MSN229**
42498505	063217410010	**MSN242**
42498506	063217410010	**MSN242**
42498718	063522310160	**MSN2008**
42522641	063523680010	**MSN2055**
42522733	063523623050	**MSN2053**
69502571	063521093070	**MSN2009**
87569020	063216896010	**MSN224**

CROSS REFERENCE	MAGNETI MARELLI	
	LONG	SHORT
IVECO		
93828721	063522187740	**MSN2005**
99451753	063521093070	**MSN2009**
99451753	063522187740	**MSN2005**
131955508	063114014010	**MSN801**
500325137	063522310110	**MSN2045**
500325145	063522300230	**MSN2041**
500325145	063522300070	**MSN2039**
500325146	063216896010	**MSN224**
500325146	063522300090	**MSN2040**
500325185	063522310100	**MSN2044**
500333269	063522235040	**MSN2036**
500333269	063523620390	**MSN2050**
500333271	063216831010	**MSN219**
500338952	063522300070	**MSN2039**
500338952	063522300230	**MSN2041**
500338953	063522235040	**MSN2036**
500389863	063522630200	**MSN2118**
504036695	063522630200	**MSN2118**
504038038	063217226010	**MSN237**
504059251	063216831010	**MSN219**
504059251	063522300230	**MSN2041**
504059251	063522300070	**MSN2039**
504072485	063217226010	**MSN237**
504086888	063521093070	**MSN2009**
504201467	063521093070	**MSN2009**
504385577	063522630200	**MSN2118**
611466605	063216731010	**MSN213**
611466608	063216733010	**MSN214**
611466612	063216741010	**MSN521**
611466632	063216741010	**MSN521**
1329201080	063522230130	**MSN2006**
4 249 867 8	063522187740	**MSN2005**
JAPANPARTS		
MT130007	063280010010	**MSN8010**
MT130200	063521120350	**MSN2004**
MT130200	063522604010	**MSN2604**
MTC104	063522620010	**MSN2620**
MTC125	063522621010	**MSN2621**
MTC126	063522617010	**MSN2617**
MTC130	063522620010	**MSN2620**
MTC952	063522623010	**MSN2623**
MTC963	063522611010	**MSN2611**
MTC967	063522609010	**MSN2609**
MTM949	063522628010	**MSN2628**
MTT230	063280051010	**MSN8051**

CROSS REFERENCE	MAGNETI MARELLI	
	LONG	SHORT
JAPANPARTS		
MTT344	063280052010	**MSN8052**
MTT356	063280055010	**MSN8055**
MTT363	063280049010	**MSN8049**
MTT364	063280049010	**MSN8049**
MTT909	063280049010	**MSN8049**
JCB LANDPOWER		
714-29300R	063227486010	**MSN180**
714-29300R	063227592010	**MSN203**
714-29500	063227602010	**MSN199**
714-29500R	063227592010	**MSN203**
714-29500R	063227486010	**MSN180**
714-35600	063521090350	**MSN2023**
714-40482	063521090350	**MSN2023**
JOHN DEERE		
185086610	063521070780	**MSN2016**
AL110503	063206834010	**MSN873**
AL110504	063206834010	**MSN873**
AL110597	063206834010	**MSN873**
AL110598	063206834010	**MSN873**
AL11503	063206834010	**MSN873**
AL62772	063206834010	**MSN873**
AL78760	063206834010	**MSN873**
RE500733	063206834010	**MSN873**
RE60384	063206834010	**MSN873**
KHD		
1163669	063522300060	**MSN2038**
1164994	063522300060	**MSN2038**
01164995	063523623050	**MSN2053**
1164995	063523623050	**MSN2053**
1170051	063522300060	**MSN2038**
1173240	063522300060	**MSN2038**
1173241	063523680010	**MSN2055**
01173241	063523680010	**MSN2055**
01174166	063523623050	**MSN2053**
1174166	063523623050	**MSN2053**
01178026	063523623050	**MSN2053**
1178026	063523623050	**MSN2053**
1180928	063522300060	**MSN2038**
01180999	063522310050	**MSN2043**
1180999	063522310050	**MSN2043**
1181751	063522230160	**MSN2035**
01181751	063522230160	**MSN2035**
1181753	063522310180	**MSN2046**
01181753	063522310180	**MSN2046**
1181976	063522300060	**MSN2038**

CROSS REFERENCE	MAGNETI MARELLI	
	LONG	SHORT
KHD		
01182126	063522310180	MSN2046
1182126	063522310180	MSN2046
01182384	063522230160	MSN2035
1182384	063522230160	MSN2035
01182390	063522310180	MSN2046
1182390	063522310180	MSN2046
01303920	063296843010	MSN887
1303920	063296843010	MSN887
4682999	063216731010	MSN213
04682999	063216731010	MSN213
04691200	063217226010	MSN237
4691200	063217226010	MSN237
04719664	063217148010	MSN229
04719664	063217410010	MSN242
4719664	063217410010	MSN242
4744841	063217226010	MSN237
04744841	063217226010	MSN237
04755111	063216741010	MSN521
4755111	063216741010	MSN521
4784745	063524160110	MSN2061
04784745	063524160110	MSN2061
12153841	063523620760	MSN2051
B15R 12X3 H762	063522300060	MSN2038
B4R 12X3 H7622	063522300060	MSN2038
KIA		
0B6S8-18-400	063522625010	MSN2625
0K241-18-400A	063522625010	MSN2625
0K552-18-400	063522615010	MSN2615
0K552-18-400A	063522615010	MSN2615
0K711-18-400C	063522610010	MSN2610
0K900-18-400B	063522625010	MSN2625
0K900-18-400C	063522625010	MSN2625
0K956-18-400B	063522624010	MSN2624
0K9BV-18-400A	063522627010	MSN2627
0K9BV-18-400B	063522627010	MSN2627
0R201-18-400B	063522614010	MSN2614
30100-22805	063522605010	MSN2605
36100-02555	063522611010	MSN2611
36100-21740	063522620010	MSN2620
36100-22800	063280901010	MSN882
36100-22800	063522620010	MSN2620
36100-22805	063280901010	MSN882
36100-22805	063522605010	MSN2605
36100-22850	063280902010	MSN883
36100-22855	063280902010	MSN883

CROSS REFERENCE	MAGNETI MARELLI	
	LONG	SHORT
KIA		
36100-23100	063522621010	MSN2621
36100-23150	063522621010	MSN2621
36100-23160	063522621010	MSN2621
36100-23170	063522626010	MSN2626
36100-23171	063522626010	MSN2626
36100-27000	063522622010	MSN2622
36100-27000	063522609010	MSN2609
36100-27010	063522622010	MSN2622
36100-27010	063522609010	MSN2609
36100-32510	063522617010	MSN2617
36100-32520	063522617010	MSN2617
36100-32530	063522617010	MSN2617
36100-32630	063522617010	MSN2617
36100-38090	063522619010	MSN2619
36100-4A000	063522628010	MSN2628
OB6S8-18-400	063522625010	MSN2625
OK241-18-400A	063522625010	MSN2625
OK30A-18-400	063522606010	MSN2606
OK552-18-400	063522615010	MSN2615
OK552-18-400A	063522615010	MSN2615
OK900-18-400B	063522625010	MSN2625
OK900-18-400C	063522625010	MSN2625
LAMBORGHINI		
296191800	063216884010	MSN878
LAND ROVER		
NAD10038E	063226801010	MSN139
LANDINI		
3539 389 M91	063227470010	MSN184
3539 389 M91	063227488010	MSN175
3542 184 M91	063227488010	MSN175
3542 184 M91	063227470010	MSN184
3542 184 M92	063227470010	MSN184
3542 184 M92	063227488010	MSN175
3542 185 M91	063227602010	MSN199
3542 185 M92	063227602010	MSN199
3546 390 M91	063227488010	MSN175
3546 390 M91	063227470010	MSN184
3546 391 M91	063227602010	MSN199
3551 773 M91	063227486010	MSN180
3551 773 M91	063227592010	MSN203
3648 190 M91	063227592010	MSN203
3648 190 M91	063227486010	MSN180
LAVERDA		
4755110	063216896010	MSN224
4807376	063216896010	MSN224

CROSS REFERENCE	MAGNETI MARELLI	
	LONG	SHORT
LAVERDA		
87569020	063216896010	MSN224
LIEBHERR		
560 256 508	063523683090	MSN2059
610 40 24	063523623050	MSN2053
620 06 62	063523680010	MSN2055
702 60 25 A	063522310050	MSN2043
LOMBARDINI		
5840176	063521070460	MSN2011
53401750	063521090120	MSN2022
58400670	063523620760	MSN2051
58400670	063296843010	MSN887
58400960	063521093570	MSN2120
58401330	063521070620	MSN2014
58401420	063521070240	MSN2010
58401750	063521090120	MSN2022
58401760	063521070460	MSN2011
58401940	063521070620	MSN2014
58401990	063521074300	MSN2018
58402060	063521090110	MSN2021
58402090	063521074300	MSN2018
58402180	063521070460	MSN2011
58402240	063521150350	MSN2030
58402440	063521070460	MSN2011
58402460	063521070240	MSN2010
58402480	063521070240	MSN2010
58402490	063521090110	MSN2021
58402610	063523620760	MSN2051
58402680	063523620760	MSN2051
563R0540	063521070580	MSN2013
SS428	063522187740	MSN2005
LUCAS ELECTRICAL		
26211	063227569010	MSN202
26220	063227488010	MSN175
26220	063227470010	MSN184
26227	063227569010	MSN202
26290	063207159010	MSN877
26290	063217126010	MSN227
26291	063227569010	MSN202
26338	063227569010	MSN202
26339	063227569010	MSN202
26379	063227569010	MSN202
26390	063207159010	MSN877
26390	063217126010	MSN227
26395	063227569010	MSN202
26410	063227602010	MSN199

CROSS REFERENCE	MAGNETI MARELLI	
	LONG	SHORT
LUCAS ELECTRICAL		
26412	063227470010	**MSN184**
26412	063227488010	**MSN175**
27432	063227488010	**MSN175**
27432	063227470010	**MSN184**
27470	063227470010	**MSN184**
27470	063227488010	**MSN175**
27500	063227569010	**MSN202**
27518	063227592010	**MSN203**
27518	063227486010	**MSN180**
27520	063227592010	**MSN203**
27520	063227486010	**MSN180**
27528	063227569010	**MSN202**
27569	063227569010	**MSN202**
27570	063227486010	**MSN180**
27570	063227592010	**MSN203**
27588	063227486010	**MSN180**
27588	063227592010	**MSN203**
27572B	063227602010	**MSN199**
LRS00115	063227569010	**MSN202**
LRS00124	063227486010	**MSN180**
LRS00124	063227592010	**MSN203**
LRS00129	063227569010	**MSN202**
LRS00134	063227569010	**MSN202**
LRS00161	063227592010	**MSN203**
LRS00161	063227486010	**MSN180**
LRS00182	063523620390	**MSN2050**
LRS00190	063227470010	**MSN184**
LRS00190	063227488010	**MSN175**
LRS00192	063222908010	**MSN290**
LRS00195	063227486010	**MSN180**
LRS00195	063227592010	**MSN203**
LRS00212	063227569010	**MSN202**
LRS00232	063227602010	**MSN199**
LRS00234	063222908010	**MSN290**
LRS00301	063227593010	**MSN540**
LRS00302	063227592010	**MSN203**
LRS00302	063227486010	**MSN180**
LRS00439	063522613010	**MSN2613**
LRS00452	063223101010	**MSN274**
LRS00552	063227569010	**MSN202**
LRS00557	063522625010	**MSN2625**
LRS00614	063101023010	**MSN410**
LRS00617	063522613010	**MSN2613**
LRS00627	063522625010	**MSN2625**
LRS00665	063521101250	**MSN2003**

CROSS REFERENCE	MAGNETI MARELLI	
	LONG	SHORT
LUCAS ELECTRICAL		
LRS00665	063521100250	**MSN2027**
LRS00673	063227501010	**MSN207**
LRS00673	063280020010	**MSN8020**
LRS00756	063280014010	**MSN8014**
LRS00788	063280014010	**MSN8014**
LRS00827	063223101010	**MSN274**
LRS00828	063217154010	**MSN230**
LRS00837	063522310100	**MSN2044**
LRS00840	063216733010	**MSN214**
LRS00841	063216741010	**MSN521**
LRS00847	063523620390	**MSN2050**
LRS00847	063216831010	**MSN219**
LRS00850	063207159010	**MSN877**
LRS00850	063217126010	**MSN227**
LRS00884	063522617010	**MSN2617**
LRS00885	063522624010	**MSN2624**
LRS00898	063521120350	**MSN2004**
LRS00932	063216884010	**MSN878**
LRS00965	063280010010	**MSN8010**
LRS00968	063227486010	**MSN180**
LRS00968	063227592010	**MSN203**
LRS00976	063280020010	**MSN8020**
LRS00989	063102018010	**MSN923**
LRS00989	063521130060	**MSN2091**
LRS00992	063227602010	**MSN199**
LRS01074	063521090120	**MSN2022**
LRS01150	063522625010	**MSN2625**
LRS01167	063522624010	**MSN2624**
LRS01190	063521070620	**MSN2014**
LRS01304	063521081800	**MSN2020**
LRS01334	063522188120	**MSN2033**
LRS01367	063522613010	**MSN2613**
LRS01471	063521093070	**MSN2009**
LRS01484	063206834010	**MSN873**
LRS01507	063280023010	**MSN8023**
LRS01562	063522300230	**MSN2041**
LRS01562	063522300070	**MSN2039**
LRS01567	063522609010	**MSN2609**
LRS01567	063522622010	**MSN2622**
LRS01582	063521070910	**MSN2017**
LRS01586	063103025010	**MSN927**
LRS01588	063521070580	**MSN2013**
LRS01592	063522230130	**MSN2006**
LRS01603	063522300060	**MSN2038**
LRS01623	063522615010	**MSN2615**

CROSS REFERENCE	MAGNETI MARELLI	
	LONG	SHORT
LUCAS ELECTRICAL		
LRS01627	063280034010	**MSN8034**
LRS01655	063522619010	**MSN2619**
LRS01658	063522618010	**MSN2618**
LRS01666	063113002010	**MSN816**
LRS01666	063521082390	**MSN2119**
LRS01726	063102022010	**MSN418**
LRS01726	063102021010	**MSN402**
LRS01743	063280902010	**MSN883**
LRS01747	063521070460	**MSN2011**
LRS01755	063522230160	**MSN2035**
LRS01791	063193001010	**MSN808**
LRS01937	063523680820	**MSN2057**
LRS01942	063522310110	**MSN2045**
LRS01976	063522235040	**MSN2036**
LRS01997	063522625010	**MSN2625**
LRS02035	063522613010	**MSN2613**
LRS02050	063207138010	**MSN245**
LRS02055	063522625010	**MSN2625**
LRS02071	063521074110	**MSN2076**
LRS02071	063521070660	**MSN2069**
LRS02077	063223085010	**MSN520**
LRS02077	063223101010	**MSN274**
LRS02095	063102018010	**MSN923**
LRS02095	063101015010	**MSN829**
LRS02117	063227602010	**MSN199**
LRS02156	063524160520	**MSN2063**
LRS02167	063522606010	**MSN2606**
LRS02168	063521074370	**MSN2078**
LRS02171	063280036010	**MSN8036**
LRS02180	063522310160	**MSN2008**
LRS02219	063280029010	**MSN8029**
LRS02252	063280045010	**MSN8045**
LRS02257	063280031010	**MSN8031**
LRS02263	063280036010	**MSN8036**
LRS02265	063280059010	**MSN8059**
LRS02289	063280027010	**MSN8027**
LRS02302	063521074300	**MSN2018**
LRS02305	063522626010	**MSN2626**
LRS02323	063280028010	**MSN8028**
LRS02328	063521070780	**MSN2016**
LRS124	063227486010	**MSN180**
LRS1439	063521150350	**MSN2030**
LRS173	063227599010	**MSN541**
LRS19	063207145010	**MSN874**
LRS190	063227470010	**MSN184**

CROSS REFERENCE	MAGNETI MARELLI	
	LONG	SHORT
LUCAS ELECTRICAL		
LRS212	063227569010	**MSN202**
LRS848	063216833010	**MSN220**
LRS850	063217126010	**MSN227**
LRS932	063216884010	**MSN878**
LRS968	063227592010	**MSN203**
LRT00138	063521093070	**MSN2009**
LRT00139	063521090680	**MSN2002**
LRT00145	063223085010	**MSN520**
LRT00145	063223101010	**MSN274**
LRT00146	063102003010	**MSN603**
LRT00147	063223085010	**MSN520**
LRT00147	063223101010	**MSN274**
LRT00148	063111007010	**MSN807**
LRT00150	063521090180	**MSN2084**
LRT00150	063112003010	**MSN209**
LRT00159	063522601010	**MSN2601**
LRT00188	063114014010	**MSN801**
LRT00192	063521070240	**MSN2010**
LRT00199	063113002010	**MSN816**
LRT00199	063521092680	**MSN2085**
LRT00200	063113003010	**MSN824**
LRT00202	063280022010	**MSN8022**
S 4515	063227470010	**MSN184**
S 5012	063227569010	**MSN202**
MAGNETI MARELLI		
63101015	063101015010	**MSN829**
63101018	063101018010	**MSN400**
63101023	063101023010	**MSN410**
63102003	063102003010	**MSN603**
63102018	063102018010	**MSN923**
63102021	063102021010	**MSN402**
63102022	063102022010	**MSN418**
63103022	063103022010	**MSN924**
63103025	063103025010	**MSN927**
63111007	063111007010	**MSN807**
63111027	063111027010	**MSN806**
63111033	063111033010	**MSN405**
63112003	063112003010	**MSN209**
63113002	063113002010	**MSN816**
63113003	063113003010	**MSN824**
63114014	063114014010	**MSN801**
63187001	063187001010	**MSN872**
63187051	063187051010	**MSN870**
63191007	063191007010	**MSN800**
63193001	063193001010	**MSN808**

CROSS REFERENCE	MAGNETI MARELLI	
	LONG	SHORT
MAGNETI MARELLI		
63206834	063206834010	**MSN873**
63207138	063207138010	**MSN245**
63207145	063207145010	**MSN874**
63207151	063207151010	**MSN875**
63207159	063207159010	**MSN877**
63216731	063216731010	**MSN213**
63216733	063216733010	**MSN214**
63216741	063216741010	**MSN521**
63216831	063216831010	**MSN219**
63216833	063216833010	**MSN220**
63216851	063216851010	**MSN221**
63216884	063216884010	**MSN878**
63216896	063216896010	**MSN224**
63217121	063217121010	**MSN226**
63217126	063217126010	**MSN227**
63217148	063217148010	**MSN229**
63217154	063217154010	**MSN230**
63217226	063217226010	**MSN237**
63217410	063217410010	**MSN242**
63222908	063222908010	**MSN290**
63223085	063223085010	**MSN520**
63223101	063223101010	**MSN274**
63226801	063226801010	**MSN139**
63227470	063227470010	**MSN184**
63227486	063227486010	**MSN180**
63227488	063227488010	**MSN175**
63227501	063227501010	**MSN207**
63227569	063227569010	**MSN202**
63227592	063227592010	**MSN203**
63227593	063227593010	**MSN540**
63227599	063227599010	**MSN541**
63227602	063227602010	**MSN199**
63280005	063280005010	**MSN8005**
63280006	063280006010	**MSN8006**
63280008	063280008010	**MSN8008**
63280010	063280010010	**MSN8010**
63280014	063280014010	**MSN8014**
63280020	063280020010	**MSN8020**
63280021	063280021010	**MSN8021**
63280022	063280022010	**MSN8022**
63280023	063280023010	**MSN8023**
63280027	063280027010	**MSN8027**
63280028	063280028010	**MSN8028**
63280029	063280029010	**MSN8029**
63280031	063280031010	**MSN8031**

CROSS REFERENCE	MAGNETI MARELLI	
	LONG	SHORT
MAGNETI MARELLI		
63280032	063280032010	**MSN8032**
63280034	063280034010	**MSN8034**
63280036	063280036010	**MSN8036**
63280045	063280045010	**MSN8045**
63280048	063280048010	**MSN8048**
63280049	063280049010	**MSN8049**
63280050	063280050010	**MSN8050**
63280051	063280051010	**MSN8051**
63280052	063280052010	**MSN8052**
63280053	063280053010	**MSN8053**
63280054	063280054010	**MSN8054**
63280055	063280055010	**MSN8055**
63280056	063280056010	**MSN8056**
63280057	063280057010	**MSN8057**
63280058	063280058010	**MSN8058**
63280059	063280059010	**MSN8059**
63280071	063280071010	**MSN8071**
63280090	063280090010	**MSN8090**
63280901	063280901010	**MSN882**
63280902	063280902010	**MSN883**
63296842	063296842010	**MSN886**
63296843	063296843010	**MSN887**
63522601	063522601010	**MSN2601**
63522602	063522602010	**MSN2602**
63522603	063522603010	**MSN2603**
63522604	063522604010	**MSN2604**
63522605	063522605010	**MSN2605**
63522606	063522606010	**MSN2606**
63522607	063522607010	**MSN2607**
63522608	063522608010	**MSN2608**
63522609	063522609010	**MSN2609**
63522610	063522610010	**MSN2610**
63522611	063522611010	**MSN2611**
63522612	063522612010	**MSN2612**
63522613	063522613010	**MSN2613**
63522614	063522614010	**MSN2614**
63522615	063522615010	**MSN2615**
63522616	063522616010	**MSN2616**
63522617	063522617010	**MSN2617**
63522618	063522618010	**MSN2618**
63522619	063522619010	**MSN2619**
63522620	063522620010	**MSN2620**
63522621	063522621010	**MSN2621**
63522622	063522622010	**MSN2622**
63522623	063522623010	**MSN2623**

CROSS REFERENCE	MAGNETI MARELLI	
	LONG	SHORT
MAGNETI MARELLI		
63522624	063522624010	**MSN2624**
63522625	063522625010	**MSN2625**
63522626	063522626010	**MSN2626**
63522627	063522627010	**MSN2627**
63522628	063522628010	**MSN2628**
63522629	063522629010	**MSN2629**
63523680	063523680010	**MSN2055**
63523683	063523683010	**MSN2058**
63523803	063523803010	**MSN2801**
MT38QA	063216831010	**MSN219**
MT38TB	063216831010	**MSN219**
MT43HA	063216733010	**MSN214**
MT43MA	063216733010	**MSN214**
MT67A	063216731010	**MSN213**
MT67AA	063216731010	**MSN213**
MT67AB	063216731010	**MSN213**
MT67AC	063216731010	**MSN213**
MT67AD	063216731010	**MSN213**
MT67B	063216733010	**MSN214**
MT67BA	063216733010	**MSN214**
MT67C	063216741010	**MSN521**
MT67CA	063216741010	**MSN521**
MT67CB	063216741010	**MSN521**
MT68A	063216831010	**MSN219**
MT68AA	063216831010	**MSN219**
MT68AB	063216831010	**MSN219**
MT68AC	063216831010	**MSN219**
MT68AD	063216831010	**MSN219**
MT68BA	063216833010	**MSN220**
MT68H	063217154010	**MSN230**
MT68LB	063216896010	**MSN224**
MT68LC	063216896010	**MSN224**
MT68PA	063216884010	**MSN878**
MT68QA	063216851010	**MSN221**
MT68S	063227602010	**MSN199**
MT71A	063207159010	**MSN877**
MT71A	063523620390	**MSN2050**
MT71A	063217126010	**MSN227**
MT71AA	063523620390	**MSN2050**
MT71AA	063207159010	**MSN877**
MT71AA	063217126010	**MSN227**
MT71AB	063523620390	**MSN2050**
MT71AB	063207159010	**MSN877**
MT71AB	063217126010	**MSN227**
MT71ABMK	063207159010	**MSN877**

CROSS REFERENCE	MAGNETI MARELLI	
	LONG	SHORT
MAGNETI MARELLI		
MT71ABMK29	063207159010	**MSN877**
MT71D	063217410010	**MSN242**
MT71D	063217148010	**MSN229**
MT71DA	063217148010	**MSN229**
MT71DA	063217410010	**MSN242**
MT71DB	063217410010	**MSN242**
MT71DB	063217148010	**MSN229**
MT71E	063217154010	**MSN230**
MT71FB	063207138010	**MSN245**
MT71MK08	063207138010	**MSN245**
MT71T	063217154010	**MSN230**
MT71TA	063217154010	**MSN230**
MT71Z	063217121010	**MSN226**
MT72A	063216731010	**MSN213**
MT72A	063217226010	**MSN237**
MT72AA	063217226010	**MSN237**
MT72AA	063216731010	**MSN213**
MT72AB	063216731010	**MSN213**
MT72AB	063217226010	**MSN237**
MT74L	063217148010	**MSN229**
MT74L	063217410010	**MSN242**
MAN		
36 26201 6003	063522310330	**MSN2049**
51 26201 7011	063207138010	**MSN245**
51 26201 7092	063524160020	**MSN2060**
51 26201 7109	063524160020	**MSN2060**
51 26201 7125	063524160020	**MSN2060**
51 26201 7158	063522310290	**MSN2048**
51 26201 7159	063524160780	**MSN2064**
51 26201 7212	063522310290	**MSN2048**
MASSEY FERGUSON		
1447731	063227602010	**MSN199**
2873006	063227602010	**MSN199**
01102343M	063207145010	**MSN874**
11023U3M	063207145010	**MSN874**
1446802M91	063227592010	**MSN203**
1447732R1	063227592010	**MSN203**
1691806R1	063227602010	**MSN199**
16974U91M	063207145010	**MSN874**
1860093M2	063227602010	**MSN199**
1868285R3	063227599010	**MSN541**
1868285R3	063227602010	**MSN199**
1868287T	063227602010	**MSN199**
2873001T	063227486010	**MSN180**
2873001T	063227592010	**MSN203**

CROSS REFERENCE	MAGNETI MARELLI	
	LONG	SHORT
MASSEY FERGUSON		
3519400M1	063227599010	**MSN541**
3519400M92	063227602010	**MSN199**
3581576M01A	063227592010	**MSN203**
3581576M02A	063227592010	**MSN203**
3581576M1	063227592010	**MSN203**
3581576M1	063227486010	**MSN180**
3581576R1	063227592010	**MSN203**
3597371M2	063227470010	**MSN184**
3597371M2	063227488010	**MSN175**
3597372M2	063227602010	**MSN199**
3597372R2	063227599010	**MSN541**
3930506R1	063227602010	**MSN199**
3930507R1	063227593010	**MSN540**
3930508R1	063227592010	**MSN203**
3930509R1	063227602010	**MSN199**
887057M1	063227470010	**MSN184**
890973M1	063227470010	**MSN184**
893398M1	063227470010	**MSN184**
894732M1	063227470010	**MSN184**
898000M1	063227470010	**MSN184**
898090M1	063227470010	**MSN184**
909971R2	063227599010	**MSN541**
9643382M1	063227488010	**MSN175**
9643382M1	063227470010	**MSN184**
MAZDA		
61R-18-400	063522625010	**MSN2625**
B315-18-400	063522625010	**MSN2625**
B505-18-400	063522625010	**MSN2625**
B593-18-400	063522625010	**MSN2625**
B61P-18-400	063522625010	**MSN2625**
B630-18-400	063522625010	**MSN2625**
B658-18-400	063522625010	**MSN2625**
B676-18-400	063522625010	**MSN2625**
B676-18-400A	063522625010	**MSN2625**
B676-18-400B	063522625010	**MSN2625**
B6S8-18-400A	063522625010	**MSN2625**
E356-18-400	063522625010	**MSN2625**
E356-18-400B	063522625010	**MSN2625**
E357-18-400	063522625010	**MSN2625**
F214-18-400A	063522624010	**MSN2624**
F240-18-400	063522625010	**MSN2625**
F2D4-18-400	063522624010	**MSN2624**
F2D4-18-400A	063522624010	**MSN2624**
F802-18-400	063522625010	**MSN2625**
F8B1-18-400	063522625010	**MSN2625**

CROSS REFERENCE	MAGNETI MARELLI	
	LONG	SHORT
MAZDA		
F8B1-18-400B	063522625010	**MSN2625**
FE1H-18-400	063522624010	**MSN2624**
FE5A-18-400	063522625010	**MSN2625**
FE5A-18-400A	063522625010	**MSN2625**
MB359-18-400A	063522625010	**MSN2625**
RF11-18-400	063522624010	**MSN2624**
Y601-18400	063280029010	**MSN8029**
Y601-18400-B	063280029010	**MSN8029**
Y601-18400-C	063280029010	**MSN8029**
Y601-18400-Z01	063280029010	**MSN8029**
MERCEDES BENZ		
0003188V006	063191007010	**MSN800**
003 151 41 01	063524160020	**MSN2060**
003 151 45 01	063524160020	**MSN2060**
004 151 58 01	063523673030	**MSN2054**
004 151 59 01	063523683090	**MSN2059**
004 151 60 01	063524160020	**MSN2060**
004 151 86 01	063522310030	**MSN2042**
005 151 13 01	063521092500	**MSN2025**
005 151 34 01	063521074030	**MSN2074**
005 151 38 01	063521060140	**MSN2067**
005 151 66 01	063521092500	**MSN2025**
005 151 74 01	063521082170	**MSN2081**
006 151 22 01	063522310330	**MSN2049**
006 151 22 03	063522310330	**MSN2049**
660 151 01 01	063521060140	**MSN2067**
743 103 10 00	063524160020	**MSN2060**
A 003 151 41 01	063524160020	**MSN2060**
A 003 151 45 01	063524160020	**MSN2060**
A 004 151 58 01	063523673030	**MSN2054**
A 004 151 59 01	063523683090	**MSN2059**
A 004 151 60 01	063524160020	**MSN2060**
A 004 151 86 01	063522310030	**MSN2042**
A 005 151 07 01	063191007010	**MSN800**
A 005 151 13 01	063521092500	**MSN2025**
A 005 151 26 01	063191007010	**MSN800**
A 005 151 34 01	063521074030	**MSN2074**
A 005 151 38 01	063521060140	**MSN2067**
A 005 151 66 01	063521092500	**MSN2025**
A 005 151 74 01	063521082170	**MSN2081**
A 006 151 22 01	063522310330	**MSN2049**
A 006 151 22 03	063522310330	**MSN2049**
A 660 151 01 01	063521060140	**MSN2067**
A 743 103 10 00	063524160020	**MSN2060**
Q0001477V006	063521060140	**MSN2067**

CROSS REFERENCE	MAGNETI MARELLI	
	LONG	SHORT
MITSUBISHI		
M001T70431	063522617010	**MSN2617**
M001T70481	063522617010	**MSN2617**
M001T70482	063522617010	**MSN2617**
M001T70483	063522617010	**MSN2617**
M001T74881	063522617010	**MSN2617**
M1T70431	063522617010	**MSN2617**
M1T70481	063522617010	**MSN2617**
M1T70482	063522617010	**MSN2617**
M1T70483	063522617010	**MSN2617**
M1T71281	063522624010	**MSN2624**
M1T71281A	063522624010	**MSN2624**
M1T71281B	063522624010	**MSN2624**
M1T71881	063522624010	**MSN2624**
M1T74881	063522617010	**MSN2617**
M1T77361	063522624010	**MSN2624**
M2T56171	063522613010	**MSN2613**
M2T56181	063522613010	**MSN2613**
M2T56182	063522613010	**MSN2613**
M2T56185	063522613010	**MSN2613**
M2T57271	063522613010	**MSN2613**
M2T57273	063522613010	**MSN2613**
M2T62971	063522613010	**MSN2613**
M3T24482H	063522625010	**MSN2625**
M3T24482HC	063522625010	**MSN2625**
M3T24482J	063522625010	**MSN2625**
M3T24482K	063522625010	**MSN2625**
M3T24486H	063522625010	**MSN2625**
M3T30881	063522625010	**MSN2625**
M3T33583	063522625010	**MSN2625**
M3T33586D	063522625010	**MSN2625**
M3T38881	063522625010	**MSN2625**
M3T38881A	063522625010	**MSN2625**
M3T38881B	063522625010	**MSN2625**
M3T38881C	063522625010	**MSN2625**
M3T38882	063522625010	**MSN2625**
M3T38882A	063522625010	**MSN2625**
M3T38882B	063522625010	**MSN2625**
M3T38882C	063522625010	**MSN2625**
M3T38883	063522625010	**MSN2625**
M3T38885	063522625010	**MSN2625**
M3T43581	063522625010	**MSN2625**
M3T49381	063522625010	**MSN2625**
M3T49581	063522625010	**MSN2625**
M3T61071	063522613010	**MSN2613**
MC108024	063522625010	**MSN2625**

CROSS REFERENCE	MAGNETI MARELLI	
	LONG	SHORT
MITSUBISHI		
MC109028	063522625010	**MSN2625**
MC109036	063522625010	**MSN2625**
MD050205	063522613010	**MSN2613**
MD061154	063522613010	**MSN2613**
MD069166	063522613010	**MSN2613**
MD070934	063522613010	**MSN2613**
MD156986	063522613010	**MSN2613**
MD162839	063522617010	**MSN2617**
MD162860	063522617010	**MSN2617**
MD162975	063522613010	**MSN2613**
MD164975	063522613010	**MSN2613**
MD172860	063522617010	**MSN2617**
MD191433	063522613010	**MSN2613**
MD191435	063522613010	**MSN2613**
MG120413	063522613010	**MSN2613**
MWM		
6 0572 01 0 0049	063296843010	**MSN887**
6 0572 01 0 0050	063296843010	**MSN887**
6 0572 01 0 0084	063207138010	**MSN245**
6 0572 01 0 0084	063523623050	**MSN2053**
6 0572 01 0 0093	063523620760	**MSN2051**
6 0572 01 0 0093	063296843010	**MSN887**
NEW HOLLAND		
2852405	063522630200	**MSN2118**
2852478	063522630200	**MSN2118**
4169093	063216831010	**MSN219**
4692478	063216831010	**MSN219**
4702248	063216831010	**MSN219**
4832942	063216831010	**MSN219**
82005342	063227569010	**MSN202**
82980757	063522235040	**MSN2036**
83949348	063227569010	**MSN202**
83981923	063227569010	**MSN202**
84377568	063522630200	**MSN2118**
500338953	063522235040	**MSN2036**
703F11000AA	063227569010	**MSN202**
71YB11000AA	063227569010	**MSN202**
D1NN11000A	063227569010	**MSN202**
D2NN11000B	063227569010	**MSN202**
D4NN11000B	063227569010	**MSN202**
D7NN11000B	063227569010	**MSN202**
D8NN11000BA	063227569010	**MSN202**
D8NN11000CA	063227569010	**MSN202**
D8NN11000CB	063227569010	**MSN202**
D8NN1000CE	063227569010	**MSN202**

CROSS REFERENCE	MAGNETI MARELLI LONG	SHORT
NEW HOLLAND		
D9NN11000AA	063227569010	**MSN202**
NIPPARTS		
J5210302	063522606010	**MSN2606**
J5210308	063522609010	**MSN2609**
J5210500	063522621010	**MSN2621**
J5210502	063522617010	**MSN2617**
J5210503	063522611010	**MSN2611**
J5210504	063522619010	**MSN2619**
J5210507	063522603010	**MSN2603**
J5210508	063522618010	**MSN2618**
J5210509	063522620010	**MSN2620**
J5210509	063522605010	**MSN2605**
J5210510	063522609010	**MSN2609**
J5210511	063522616010	**MSN2616**
J5210518	063522621010	**MSN2621**
J5210521	063522626010	**MSN2626**
J5210900	063522604010	**MSN2604**
J5210901	063522601010	**MSN2601**
J5210904	063522612010	**MSN2612**
J5210906	063522607010	**MSN2607**
J5210908	063522604010	**MSN2604**
J5212070	063280051010	**MSN8051**
J5212086	063280052010	**MSN8052**
J5212093	063280055010	**MSN8055**
J5212094	063280055010	**MSN8055**
J5212098	063280049010	**MSN8049**
J5212100	063280053010	**MSN8053**
J5212104	063280053010	**MSN8053**
J5212104	063280055010	**MSN8055**
J5212106	063280050010	**MSN8050**
J5212108	063280054010	**MSN8054**
J5212110	063280054010	**MSN8054**
J5212112	063280049010	**MSN8049**
J5212114	063280058010	**MSN8058**
J5212115	063280049010	**MSN8049**
J5212121	063280059010	**MSN8059**
J5213009	063522625010	**MSN2625**
J5213019	063522624010	**MSN2624**
J5215005	063522620010	**MSN2620**
J5215006	063522623010	**MSN2623**
J5215022	063522617010	**MSN2617**
NISSAN		
772000082	063523621000	**MSN2052**
772000120	063522188120	**MSN2033**
23300 LA4MA	063522310160	**MSN2008**

CROSS REFERENCE	MAGNETI MARELLI LONG	SHORT
OPEL		
1202000	063522601010	**MSN2601**
1202001	063522602010	**MSN2602**
1202002	063522602010	**MSN2602**
1202010	063522601010	**MSN2601**
1202019	063522602010	**MSN2602**
1202020	063522602010	**MSN2602**
1202109	063522602010	**MSN2602**
1202110	063521074920	**MSN2117**
1202110	063522602010	**MSN2602**
1202125	063522601010	**MSN2601**
1202126	063522602010	**MSN2602**
1202128	063521120350	**MSN2004**
1202129	063522602010	**MSN2602**
1202130	063522601010	**MSN2601**
1202131	063521120350	**MSN2004**
1202137	063521120350	**MSN2004**
1202172	063521120350	**MSN2004**
1202173	063521120350	**MSN2004**
1202953	063522602010	**MSN2602**
1202958	063522601010	**MSN2601**
1220005	063522601010	**MSN2601**
1257526	063523803010	**MSN2801**
3471150	063522602010	**MSN2602**
3471168	063522602010	**MSN2602**
3471172	063522602010	**MSN2602**
3471177	063522602010	**MSN2602**
6202004	063523803010	**MSN2801**
6202016	063521120350	**MSN2004**
6202075	063521120350	**MSN2004**
9115192	063521120350	**MSN2004**
9115197	063521120350	**MSN2004**
9130838	063521120350	**MSN2004**
9130838	063521120350	**MSN2004**
9163856	063521120350	**MSN2004**
9190838	063521120350	**MSN2004**
9512051	063521120350	**MSN2004**
12564088	063523803010	**MSN2801**
55351630	063521090680	**MSN2002**
55353257	063521074370	**MSN2078**
55566800	063521074920	**MSN2117**
90277934	063522601010	**MSN2601**
90297846	063522601010	**MSN2601**
90341777	063521120350	**MSN2004**
90348290	063522601010	**MSN2601**
90421877	063521120350	**MSN2004**

CROSS REFERENCE	MAGNETI MARELLI LONG	SHORT
OPEL		
90508036	063521120350	**MSN2004**
90543871	063521120350	**MSN2004**
90543872	063521120350	**MSN2004**
93171936	063521120350	**MSN2004**
93176034	063521090680	**MSN2002**
93186246	063521074370	**MSN2078**
PERKINS		
1446802M91	063227592010	**MSN203**
1447732MI	063227592010	**MSN203**
1447732R1	063227592010	**MSN203**
1850866	063521090350	**MSN2023**
18508661	063521070780	**MSN2016**
26410R	063227602010	**MSN199**
26414R	063227602010	**MSN199**
2873001	063227592010	**MSN203**
2873006T	063227602010	**MSN199**
28735052	063227593010	**MSN540**
2873A001	063227592010	**MSN203**
2873A012	063227488010	**MSN175**
2873A012	063227470010	**MSN184**
2873A017	063227488010	**MSN175**
2873A030	063227592010	**MSN203**
2873A102	063227592010	**MSN203**
2873A104	063227488010	**MSN175**
2873A104	063227470010	**MSN184**
2873B055	063227602010	**MSN199**
2873B056	063207145010	**MSN874**
2873B056	063227592010	**MSN203**
2873B057	063227602010	**MSN199**
2873B061	063227593010	**MSN540**
2873B071	063227592010	**MSN203**
2873B071	063207145010	**MSN874**
2873B072	063227602010	**MSN199**
2873D004	063227593010	**MSN540**
2873D005	063227488010	**MSN175**
2873D306	063523680270	**MSN2056**
3581576MI	063227592010	**MSN203**
3581576R1	063227592010	**MSN203**
37701400	063227592010	**MSN203**
37701400	063227486010	**MSN180**
PIAGGIO		
292083	063521090110	**MSN2021**
56514R	063521070460	**MSN2011**
PSA Group		
96147592	063521070630	**MSN2015**

CROSS REFERENCE	MAGNETI MARELLI LONG	MAGNETI MARELLI SHORT
PSA Group		
96155198	063521070630	MSN2015
96253825	063521084000	MSN2083
96343143	063521081760	MSN2079
96365597	063280090010	MSN8090
96398467	063280090010	MSN8090
96398597	063280090010	MSN8090
97530824	063521120410	MSN2029
9609313280	063521120410	MSN2029
9648111680	063521084000	MSN2083
580289	063207151010	MSN875
5802A7	063207151010	MSN875
5802AQ	063521093000	MSN2026
5802E5	063521081760	MSN2079
5802L1	063207151010	MSN875
5802M9	063521120410	MSN2029
5802W5	063521084000	MSN2083
5802W7	063280090010	MSN8090
5802ZO	063522230130	MSN2006
QUINTON HAZELL		
8010030	063522602010	MSN2602
8010450	063223085010	MSN520
8010450	063223101010	MSN274
8010950	063227501010	MSN207
8011060	063217410010	MSN242
8011080	063217154010	MSN230
8011891	063222908010	MSN290
8013620	063223085010	MSN520
8013940	063101023010	MSN410
8014700	063521100250	MSN2027
8014711	063222908010	MSN290
8014860	063522602010	MSN2602
8016470	063227602010	MSN199
8016570	063521081800	MSN2020
8016890	063522601010	MSN2601
8017030	063102018010	MSN923
8017030	063521130060	MSN2091
8017060	063280010010	MSN8010
8017070	063280010010	MSN8010
8017110	063521074420	MSN2019
8017125	063521120350	MSN2004
8017530	063280006010	MSN8006
8017790	063113002010	MSN816
8018230	063280014010	MSN8014
8018490	063521093070	MSN2009
8018960	063522230130	MSN2006

CROSS REFERENCE	MAGNETI MARELLI LONG	MAGNETI MARELLI SHORT
QUINTON HAZELL		
8018970	063280090010	MSN8090
8020300	063521230180	MSN2107
8021240	063521074370	MSN2078
8021240	063280045010	MSN8045
8022490	063521074300	MSN2018
8052309	063522625010	MSN2625
8052311	063522625010	MSN2625
8052313	063522625010	MSN2625
8052319	063522624010	MSN2624
8052502	063522613010	MSN2613
8052505	063522617010	MSN2617
8052506	063522613010	MSN2613
8052522	063522617010	MSN2617
8070300	063522615010	MSN2615
8070302	063522606010	MSN2606
8070504	063522619010	MSN2619
8070508	063522618010	MSN2618
8070906	063522607010	MSN2607
8080021	063280020010	MSN8020
8080022	063114014010	MSN801
8080046	063191007010	MSN800
8080067	063522613010	MSN2613
8080068	063522612010	MSN2612
8080094	063187051010	MSN870
8080113	063280045010	MSN8045
8080115	063111027010	MSN806
8080118	063280023010	MSN8023
8080134	063280034010	MSN8034
8080148	063280021010	MSN8021
8080174	063280071010	MSN8071
8080188	063523803010	MSN2801
8080210	063523803010	MSN2801
8080216	063280029010	MSN8029
8080222	063522609010	MSN2609
8080222	063522622010	MSN2622
8080238	063280036010	MSN8036
8080239	063280027010	MSN8027
8080244	063280031010	MSN8031
8080247	063280902010	MSN883
8080251	063280028010	MSN8028
8811140	063522300060	MSN2038
8811160	063217226010	MSN237
8811220	063216831010	MSN219
8811330	063216741010	MSN521
8811340	063216733010	MSN214

CROSS REFERENCE	MAGNETI MARELLI LONG	MAGNETI MARELLI SHORT
QUINTON HAZELL		
8812670	063523620390	MSN2050
8813420	063524160110	MSN2061
8813480	063523673030	MSN2054
8813871	063216851010	MSN221
8817880	063523680820	MSN2057
8819010	063522310110	MSN2045
8819020	063522300060	MSN2038
FRS178	063102003010	MSN603
FRS179	063223085010	MSN520
FRS179	063223101010	MSN274
FRS285	063222908010	MSN290
FRS436	063280008010	MSN8008
FRS451	063522621010	MSN2621
FRS468	063280022010	MSN8022
FRS643	063216896010	MSN224
FRS676	063280014010	MSN8014
RENAULT		
5000393154	063216851010	MSN221
5000612741	063216851010	MSN221
5000822346	063524160020	MSN2060
5001014209	063216851010	MSN221
7700105080	063521070470	MSN2012
7700106426	063521081800	MSN2020
7700377051	063521093070	MSN2009
7700860915	063521081800	MSN2020
7700865719	063521070470	MSN2012
7701352050	063521081800	MSN2020
7701381629	063216851010	MSN221
RENAULT AGRICULTURE		
6005003154	063227602010	MSN199
6005007548	063227470010	MSN184
6005007548	063227488010	MSN175
6005012976	063206834010	MSN873
6005700082	063227488010	MSN175
6005700082	063227470010	MSN184
7700044184	063206834010	MSN873
7701028780	063227488010	MSN175
7701028780	063227470010	MSN184
7701030289	063227470010	MSN184
7701030289	063227488010	MSN175
RENAULT TRUCKS		
5001014209	063216851010	MSN221
5001014230	063216896010	MSN224
6000102270	063522300060	MSN2038
6000102394	063522300060	MSN2038

CROSS REFERENCE	MAGNETI MARELLI	
	LONG	SHORT
RENAULT TRUCKS		
6005003154	063227602010	MSN199
6005016395	063522300060	MSN2038
6005021272	063227602010	MSN199
6005700081	063227602010	MSN199
7700011850	063227602010	MSN199
7701031686	063227602010	MSN199
ROVER		
GNU4535	063101023010	MSN410
NAD10024	063227501010	MSN207
NAD10038	063226801010	MSN139
NAD10119	063226801010	MSN139
NAD10149	063226801010	MSN139
PRC5658	063226801010	MSN139
PRC6578	063226801010	MSN139
RTC5228	063226801010	MSN139
SAAB		
4966842	063522601010	MSN2601
4966847	063522601010	MSN2601
8828238	063522601010	MSN2601
SAME		
01178026	063523623050	MSN2053
296190300	063207138010	MSN245
296190800	063207138010	MSN245
296191400	063216884010	MSN878
296191800	063216884010	MSN878
296193600	063207138010	MSN245
296193700	063207138010	MSN245
SCANIA		
369554	063523683010	MSN2058
571451	063523683010	MSN2058
SMART		
0001477V006	063521060140	MSN2067
0003188V006	063191007010	MSN800
0003188V007	063191007010	MSN800
0003188V008	063191007010	MSN800
A0051512601	063191007010	MSN800
Q0001477V006	063521060140	MSN2067
SSANGYONG		
6611513101	063522608010	MSN2608
6611513701	063522608010	MSN2608
STEINBOCK		
017769	063523623050	MSN2053
8157761	063521090350	MSN2023
STEYR		
0051513401	063521074030	MSN2074
STEYR		
207090002	063207138010	MSN245
2130090013	063296843010	MSN887
40800090010	063216884010	MSN878
STILL		
527505	063521101380	MSN2088
TOYOTA		
9142724	063227501010	MSN207
28100-0D090	063280048010	MSN8048
28100-0D180	063280048010	MSN8048
28100-0G040	063280059010	MSN8059
28100-0J010	063280054010	MSN8054
28100-0J020	063280054010	MSN8054
28100-0R010	063280059010	MSN8059
28100-0R010-84	063280059010	MSN8059
28100-21020	063280055010	MSN8055
28100-21030	063280055010	MSN8055
28100-21040	063280056010	MSN8056
28100-21060	063280057010	MSN8057
28100-21061	063280057010	MSN8057
28100-21062	063280057010	MSN8057
28100-22030	063280049010	MSN8049
28100-22040	063280049010	MSN8049
28100-23020	063280054010	MSN8054
28100-23030	063280054010	MSN8054
28100-28010	063280050010	MSN8050
28100-33040	063280058010	MSN8058
28100-33050	063280058010	MSN8058
28100-64300	063280052010	MSN8052
28100-64430	063280052010	MSN8052
28100-74130	063280051010	MSN8051
28100-74260	063280053010	MSN8053
28100-74270	063280053010	MSN8053
MS428000-0690	063280048010	MSN8048
TRISCAN		
22-318-005-092	063222908010	MSN290
22-318-010-092	063217154010	MSN230
22-318-024-092	063101023010	MSN410
22-318-028-092	063522300090	MSN2040
22-318-028-092	063216896010	MSN224
22-318-037-092	063217148010	MSN229
22-318-037-092	063217410010	MSN242
22-318-038-092	063217126010	MSN227
22-318-049-092	063223085010	MSN520
22-318-049-092	063223101010	MSN274
22-318-053-092	063101015010	MSN829
TRISCAN		
22-318-056-092	063223085010	MSN520
22-318-056-092	063223101010	MSN274
22-318-057-092	063111007010	MSN807
22-318-059-092	063102003010	MSN603
22-318-068-092	063114014010	MSN801
22-318-073-092	063222908010	MSN290
22-318-077-092	063113002010	MSN816
22-318-078-092	063111007010	MSN807
22-318-083-092	063521070910	MSN2017
22-318-087-092	063101023010	MSN410
22-318-087-092	063103025010	MSN927
22-319-006-102	063280014010	MSN8014
22-319-011-102	063280008010	MSN8008
22-319-012-102	063280014010	MSN8014
22-319-013-102	063280014010	MSN8014
22-319-017-102	063280014010	MSN8014
22-319-020-102	063280008010	MSN8008
22-319-021-102	063280014010	MSN8014
22-319-024-102	063280014010	MSN8014
22-319-025-102	063280014010	MSN8014
22-319-028-102	063280008010	MSN8008
22-319-030-102	063280014010	MSN8014
22-319-033-102	063280014010	MSN8014
22-319-037-102	063280014010	MSN8014
22-319-041-102	063280005010	MSN8005
22-319-042-102	063280005010	MSN8005
22-319-044-232	063280006010	MSN8006
22-319-045-102	063280010010	MSN8010
22-319-046-102	063280010010	MSN8010
22-319-047-212	063280006010	MSN8006
22-319-051-102	063280008010	MSN8008
22-319-052-192	063280022010	MSN8022
22-319-053-102	063280008010	MSN8008
22-320-006-132	063227501010	MSN207
22-320-009-102	063280014010	MSN8014
22-320-012-132	063280020010	MSN8020
22-326-001-082	063522620010	MSN2620
22-326-008-082	063522617010	MSN2617
22-326-015-082	063522617010	MSN2617
22-326-034-082	063522621010	MSN2621
22-326-036-082	063522611010	MSN2611
22-326-039-082	063522618010	MSN2618
22-326-041-082	063522619010	MSN2619
22-328-017-092	063521120350	MSN2004
22-328-017-092	063522604010	MSN2604

CROSS REFERENCE	MAGNETI MARELLI	
	LONG	SHORT
TRISCAN		
22-328-030-092	063522601010	**MSN2601**
22-335-042-132	063280051010	**MSN8051**
22-335-060-092	063280054010	**MSN8054**
22-335-066-102	063280052010	**MSN8052**
22-335-071-092	063280055010	**MSN8055**
22-335-072-132	063280053010	**MSN8053**
22-335-073-132	063280053010	**MSN8053**
22-339-109-092	063226801010	**MSN139**
22-600-009-102	063227592010	**MSN203**
22-600-085-092	063522300060	**MSN2038**
22-600-085-094	063522310050	**MSN2043**
22-644-002-102	063227602010	**MSN199**
22-647-001-082	063522607010	**MSN2607**
UNIC-SIMCA		
004691200	063217226010	**MSN237**
004719664	063217410010	**MSN242**
004755108	063216731010	**MSN213**
4755110	063216896010	**MSN224**
4755111	063216741010	**MSN521**
4784745	063524160110	**MSN2061**
4784747	063524160520	**MSN2063**
4854185	063523680820	**MSN2057**
004691200X	063217226010	**MSN237**
URSUS		
70.061.18 M1	063227602010	**MSN199**
70.179.54 M1	063227602010	**MSN199**
VAG		
0003914191	063222908010	**MSN290**
000444869 4	063217154010	**MSN230**
020911023F	063521210280	**MSN2099**
020911023J	063521120380	**MSN2089**
020911023L	063521120380	**MSN2089**
020911023M	063521120380	**MSN2089**
020911023MX	063521120380	**MSN2089**
020911023N	063521120380	**MSN2089**
020911023PX	063521250350	**MSN2111**
02A911023L	063521210260	**MSN2098**
02A911024D	063521250420	**MSN2112**
02A911024DX	063521250420	**MSN2112**
02A911024X	063521250420	**MSN2112**
02E911023H	063521230160	**MSN2106**
02E911023J	063521214120	**MSN2103**
02E911023JX	063521214120	**MSN2103**
02M911023F	063521250480	**MSN2113**
02M911023G	063521214020	**MSN2101**

CROSS REFERENCE	MAGNETI MARELLI	
	LONG	SHORT
VAG		
02M911023M	063521214020	**MSN2101**
02M911023P	063521230140	**MSN2105**
02T911023E	063521210160	**MSN2097**
02T911023G	063521204000	**MSN2093**
02T911023M	063521204080	**MSN2095**
02T911023R	063521204060	**MSN2094**
02T911023RX	063521204060	**MSN2094**
02T911024	063521230180	**MSN2107**
02Z911023E	063521214080	**MSN2102**
02Z911023EX	063521214080	**MSN2102**
02Z911023F	063521230120	**MSN2104**
036911023QX	063521120440	**MSN2090**
036911023R	063521130070	**MSN2092**
036911023RX	063521130070	**MSN2092**
036911023S	063521071030	**MSN2073**
053911023A	063521070680	**MSN2070**
055911023L	063521120380	**MSN2089**
058911023B	063521070680	**MSN2070**
068911024B	063521101060	**MSN2028**
068911024F	063521101380	**MSN2088**
068911024H	063521240200	**MSN2108**
06B911023	063521070730	**MSN2071**
06B911023A	063521074270	**MSN2077**
06B911023B	063521070730	**MSN2071**
06B911023X	063521070730	**MSN2071**
085911023A	063521240220	**MSN2109**
085911023J	063521120440	**MSN2090**
085911023K	063521240220	**MSN2109**
085911023M	063521240260	**MSN2110**
085911023MX	063521240260	**MSN2110**
0AH911023A	063521204100	**MSN2096**
0AH911023AX	063521204100	**MSN2096**
100911023G	063521074030	**MSN2074**
HB0219080004	063222908010	**MSN290**
HB90800002	063222908010	**MSN290**
HB90800004	063222908010	**MSN290**
SE021908000A	063222908010	**MSN290**
SE127908000A	063222908010	**MSN290**
SE127908000AX	063222908010	**MSN290**
VALEO		
43316	063227599010	**MSN541**
183901	063522604010	**MSN2604**
432503	063222908010	**MSN290**
432567	063227470010	**MSN184**
432567	063227488010	**MSN175**

CROSS REFERENCE	MAGNETI MARELLI	
	LONG	SHORT
VALEO		
432570	063227470010	**MSN184**
432570	063227488010	**MSN175**
432571	063227470010	**MSN184**
432571	063227488010	**MSN175**
432601	063222908010	**MSN290**
432621	063521081800	**MSN2020**
432622	063521070470	**MSN2012**
432634	063101023010	**MSN410**
432636	063521070630	**MSN2015**
432643	063521130060	**MSN2091**
432643	063101015010	**MSN829**
432644	063521092500	**MSN2025**
432650	063101023010	**MSN410**
432653	063280014010	**MSN8014**
432659	063223085010	**MSN520**
432659	063223101010	**MSN274**
432665	063521074920	**MSN2117**
433276	063222908010	**MSN290**
433282	063217154010	**MSN230**
433287	063280014010	**MSN8014**
433289	063280014010	**MSN8014**
433292	063227501010	**MSN207**
433292	063280020010	**MSN8020**
433297	063521074920	**MSN2117**
433316	063227602010	**MSN199**
433325	063101023010	**MSN410**
433333	063222908010	**MSN290**
433340	063280008010	**MSN8008**
433347	063280014010	**MSN8014**
436007	063223085010	**MSN520**
436007	063223101010	**MSN274**
436033	063223085010	**MSN520**
436033	063223101010	**MSN274**
436037	063217410010	**MSN242**
436037	063217148010	**MSN229**
436044	063216896010	**MSN224**
436049	063521100250	**MSN2027**
436056	063521120350	**MSN2004**
436058	063521081800	**MSN2020**
436060	063521070470	**MSN2012**
436070	063206834010	**MSN873**
436073	063216831010	**MSN219**
436074	063217126010	**MSN227**
436075	063296842010	**MSN886**
436077	063523623050	**MSN2053**

CROSS REFERENCE	MAGNETI MARELLI	
	LONG	SHORT
VALEO		
438052	063223085010	**MSN520**
438052	063223101010	**MSN274**
438053	063521101250	**MSN2003**
438053	063521100250	**MSN2027**
438053	063112003010	**MSN209**
438060	063280005010	**MSN8005**
438065	063280020010	**MSN8020**
438068	063521084000	**MSN2083**
438072	063521101060	**MSN2028**
438072	063521101380	**MSN2088**
438074	063521081800	**MSN2020**
438097	063522620010	**MSN2620**
438099	063522619010	**MSN2619**
438100	063522618010	**MSN2618**
438101	063522611010	**MSN2611**
438103	063522621010	**MSN2621**
438115	063522625010	**MSN2625**
438118	063522617010	**MSN2617**
438123	063522623010	**MSN2623**
438148	063280008010	**MSN8008**
438152	063521250480	**MSN2113**
438168	063521074370	**MSN2078**
438168	063280045010	**MSN8045**
438169	063521093070	**MSN2009**
438169	063217148010	**MSN229**
438171	063521214080	**MSN2102**
438172	063521204060	**MSN2094**
438173	063521204080	**MSN2095**
438174	063521214020	**MSN2101**
438175	063521230120	**MSN2104**
438193	063280090010	**MSN8090**
438198	063522607010	**MSN2607**
438207	063521081760	**MSN2079**
438229	063521204100	**MSN2096**
454423	063217154010	**MSN230**
454743	063222908010	**MSN290**
454757	063223085010	**MSN520**
454757	063223101010	**MSN274**
455022	063280014010	**MSN8014**
455500	063216851010	**MSN221**
455512	063521070630	**MSN2015**
455514	063280090010	**MSN8090**
455516	063523680010	**MSN2055**
455517	063522310100	**MSN2044**
455517	063216731010	**MSN213**

CROSS REFERENCE	MAGNETI MARELLI	
	LONG	SHORT
VALEO		
455518	063216741010	**MSN521**
455518	063216731010	**MSN213**
455520	063217226010	**MSN237**
455521	063216733010	**MSN214**
455531	063524160020	**MSN2060**
455533	063523683010	**MSN2058**
455553	063101015010	**MSN829**
455553	063521130060	**MSN2091**
455661	063280014010	**MSN8014**
455669	063216896010	**MSN224**
455680	063521070730	**MSN2071**
455692	063216851010	**MSN221**
455720	063521092500	**MSN2025**
455724	063280005010	**MSN8005**
455725	063280008010	**MSN8008**
455726	063280014010	**MSN8014**
455746	063280008010	**MSN8008**
455872	063223085010	**MSN520**
455872	063223101010	**MSN274**
455873	063521101250	**MSN2003**
455873	063112003010	**MSN209**
455889	063280071010	**MSN8071**
455890	063280005010	**MSN8005**
455892	063280032010	**MSN8032**
455893	063280005010	**MSN8005**
455894	063280006010	**MSN8006**
455895	063280020010	**MSN8020**
455896	063280006010	**MSN8006**
455896	063280008010	**MSN8008**
455897	063226801010	**MSN139**
455903	063280014010	**MSN8014**
455905	063522623010	**MSN2623**
455905	063522613010	**MSN2613**
455928	063521084000	**MSN2083**
455933	063521101060	**MSN2028**
455933	063521101380	**MSN2088**
455936	063521081800	**MSN2020**
455937	063521081760	**MSN2079**
455963	063522620010	**MSN2620**
455965	063522619010	**MSN2619**
455966	063522618010	**MSN2618**
455967	063522611010	**MSN2611**
455969	063522621010	**MSN2621**
458116	063280010010	**MSN8010**
458117	063280010010	**MSN8010**

CROSS REFERENCE	MAGNETI MARELLI	
	LONG	SHORT
VALEO		
458118	063280008010	**MSN8008**
458156	063114014010	**MSN801**
458162	063102021010	**MSN402**
458162	063102022010	**MSN418**
458167	063521250480	**MSN2113**
458180	063280090010	**MSN8090**
458187	063522625010	**MSN2625**
458191	063521074370	**MSN2078**
458191	063280045010	**MSN8045**
458192	063521093070	**MSN2009**
458205	063522607010	**MSN2607**
458208	063521093070	**MSN2009**
458212	063113002010	**MSN816**
458213	063521214080	**MSN2102**
458214	063521204060	**MSN2094**
458215	063521204080	**MSN2095**
458216	063521214020	**MSN2101**
458217	063521230120	**MSN2104**
458218	063521230140	**MSN2105**
458222	063522601010	**MSN2601**
458227	063280010010	**MSN8010**
458227	063227602010	**MSN199**
458230	063102003010	**MSN603**
458234	063280014010	**MSN8014**
458241	063111007010	**MSN807**
458249	063280090010	**MSN8090**
458252	063521074420	**MSN2019**
458254	063523680820	**MSN2057**
458255	063521070910	**MSN2017**
458264	063521082040	**MSN2001**
458269	063522310290	**MSN2048**
458279	063522617010	**MSN2617**
458280	063521093070	**MSN2009**
458292	063522310030	**MSN2042**
458313	063280049010	**MSN8049**
458314	063280049010	**MSN8049**
458320	063280055010	**MSN8055**
458320	063280054010	**MSN8054**
458324	063522609010	**MSN2609**
458327	063280054010	**MSN8054**
458328	063280052010	**MSN8052**
458332	063522310160	**MSN2008**
458345	063522230130	**MSN2006**
458371	063280022010	**MSN8022**
458374	063280023010	**MSN8023**

CROSS REFERENCE	MAGNETI MARELLI	
	LONG	SHORT
VALEO		
458380	063280034010	**MSN8034**
458393	063521204100	**MSN2096**
458460	063521074420	**MSN2019**
458461	063521240200	**MSN2108**
458466	063280006010	**MSN8006**
458470	063280022010	**MSN8022**
458470	063187051010	**MSN870**
458471	063191007010	**MSN800**
458474	063223085010	**MSN520**
458474	063223101010	**MSN274**
458476	063111007010	**MSN807**
458476	063521070660	**MSN2069**
458480	063280051010	**MSN8051**
458482	063521210160	**MSN2097**
458486	063522230130	**MSN2006**
458492	063521240220	**MSN2109**
458497	063101023010	**MSN410**
458504	063114014010	**MSN801**
458505	063521070910	**MSN2017**
458546	063522617010	**MSN2617**
458550	063521092680	**MSN2085**
458551	063521060140	**MSN2067**
458564	063522612010	**MSN2612**
458566	063226801010	**MSN139**
458580	063280052010	**MSN8052**
458585	063521082040	**MSN2001**
458585	063113003010	**MSN824**
499011	063222908010	**MSN290**
532024	063222908010	**MSN290**
600060	063522621010	**MSN2621**
600072	063522603010	**MSN2603**
600078	063522628010	**MSN2628**
600083	063522611010	**MSN2611**
600084	063280901010	**MSN882**
600084	063522605010	**MSN2605**
726006	063280020010	**MSN8020**
726017	063521070630	**MSN2015**
726020	063101015010	**MSN829**
726020	063521130060	**MSN2091**
726037	063521070730	**MSN2071**
726039	063521074370	**MSN2078**
726039	063280045010	**MSN8045**
726040	063280006010	**MSN8006**
433292BO	063227501010	**MSN207**
458 297	063216831010	**MSN219**

CROSS REFERENCE	MAGNETI MARELLI	
	LONG	SHORT
VALEO		
594 085	063521070620	**MSN2014**
D11E120	063296843010	**MSN887**
D11E131	063296843010	**MSN887**
D11E155	063227470010	**MSN184**
D11E155	063227488010	**MSN175**
D6G1	063280045010	**MSN8045**
D6G32	063280045010	**MSN8045**
D6RA22	063521070620	**MSN2014**
D6RA30	063222908010	**MSN290**
ND002	063222908010	**MSN290**
ND119	063222908010	**MSN290**
ND140	063521070620	**MSN2014**
ND166	063223085010	**MSN520**
ND166	063223101010	**MSN274**
VS251	063216896010	**MSN224**
VAUXHALL		
R1040008	063521120350	**MSN2004**
VISTEON		
2010001005	063280005010	**MSN8005**
2010001006	063280006010	**MSN8006**
2010001008	063280008010	**MSN8008**
2010001010	063280010010	**MSN8010**
2010001014	063280014010	**MSN8014**
2010001020	063280020010	**MSN8020**
2010001021	063280021010	**MSN8021**
2010001022	063280022010	**MSN8022**
2010001023	063280023010	**MSN8023**
2010001025	063280008010	**MSN8008**
2010001027	063280027010	**MSN8027**
2010001028	063280028010	**MSN8028**
2010001029	063280029010	**MSN8029**
2010001031	063280031010	**MSN8031**
2010001032	063280032010	**MSN8032**
2010001034	063280034010	**MSN8034**
2010001036	063280036010	**MSN8036**
VM		
35 53 2063F	063521093570	**MSN2120**
VOLVO		
471113	063217154010	**MSN230**
2041237	063522310050	**MSN2043**
6209190	063523680010	**MSN2055**
8697576	063280036010	**MSN8036**
30667058	063280036010	**MSN8036**
30667059	063280027010	**MSN8027**
30667060	063280029010	**MSN8029**

CROSS REFERENCE	MAGNETI MARELLI	
	LONG	SHORT
VOLVO		
30667738	063280027010	**MSN8027**
30667739	063280029010	**MSN8029**
30795405	063280027010	**MSN8027**
30795406	063280029010	**MSN8029**
31288275	063280010010	**MSN8010**
36002761	063280010010	**MSN8010**
30667058-A	063280036010	**MSN8036**
30667059-A	063280027010	**MSN8027**
30667060-A	063280029010	**MSN8029**
30667738-AA	063280027010	**MSN8027**
30667739-AA	063280029010	**MSN8029**
30795405-AA	063280027010	**MSN8027**
30795406-AA	063280029010	**MSN8029**
8697576-A	063280036010	**MSN8036**